US 20090262741A1

(19) United States

(12) Patent Application Publication

Jungck et al.

(10) Pub. No.: US 2009/0262741 A1

(43) Pub. Date: Oct. 22, 2009

(54) TRANSPARENT PROVISIONING OF SERVICES OVER A NETWORK

(76) Inventors: **Peder J. Jungck**, San Carlos, CA (US); **Matthew Donald Drown**, Palo Alto, CA (US); **Sean M. Goller**, Mountain View, CA (US)

Correspondence Address:
**BRINKS HOFER GILSON & LIONE**
**P.O. BOX 10395**
**CHICAGO, IL 60610 (US)**

(21) Appl. No.: **12/493,312**

(22) Filed: **Jun. 29, 2009**

**Related U.S. Application Data**

(63) Continuation-in-part of application No. 11/189,172, filed on Jul. 25, 2005, now Pat. No. 7,570,663, which is a continuation of application No. 09/858,309, filed on May 15, 2001, now Pat. No. 7,032,031, which is a continuation-in-part of application No. 09/602,129, filed on Jun. 23, 2000, now Pat. No. 6,829,654.

**Publication Classification**

(51) **Int. Cl.**
*H04L 12/56* (2006.01)
*G06F 15/16* (2006.01)

(52) **U.S. Cl.** ..... **370/392**; 709/246

(57) **ABSTRACT**

An apparatus and method for enhancing the infrastructure of a network such as the Internet is disclosed. A packet interceptor/processor apparatus is coupled with the network so as to be able to intercept and process packets flowing over the network. Further, the apparatus provides external connectivity to other devices that wish to intercept packets as well. The apparatus applies one or more rules to the intercepted packets which execute one or more functions on a dynamically specified portion of the packet and take one or more actions with the packets. The apparatus is capable of analyzing any portion of the packet including the header and payload. Actions include releasing the packet unmodified, deleting the packet, modifying the packet, logging/storing information about the packet or forwarding the packet to an external device for subsequent processing. Further, the rules may be dynamically modified by the external devices.

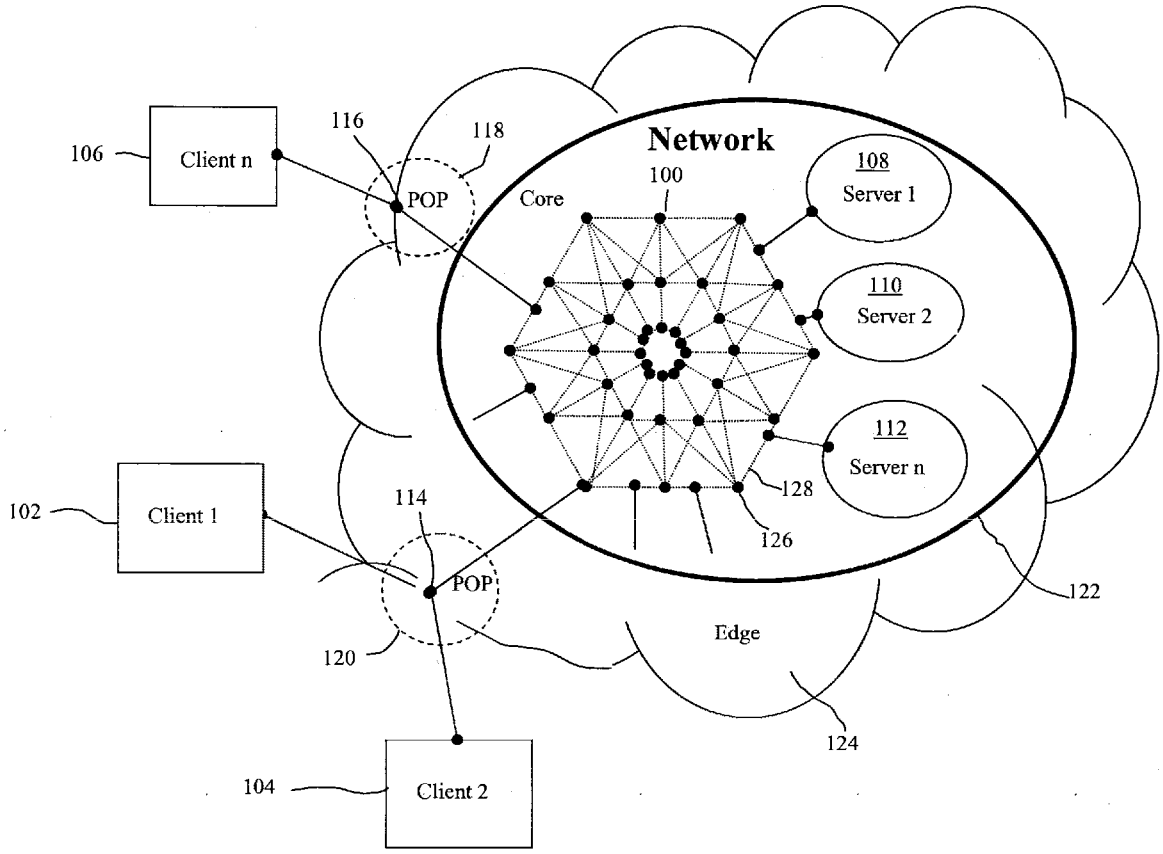

FIG. 1

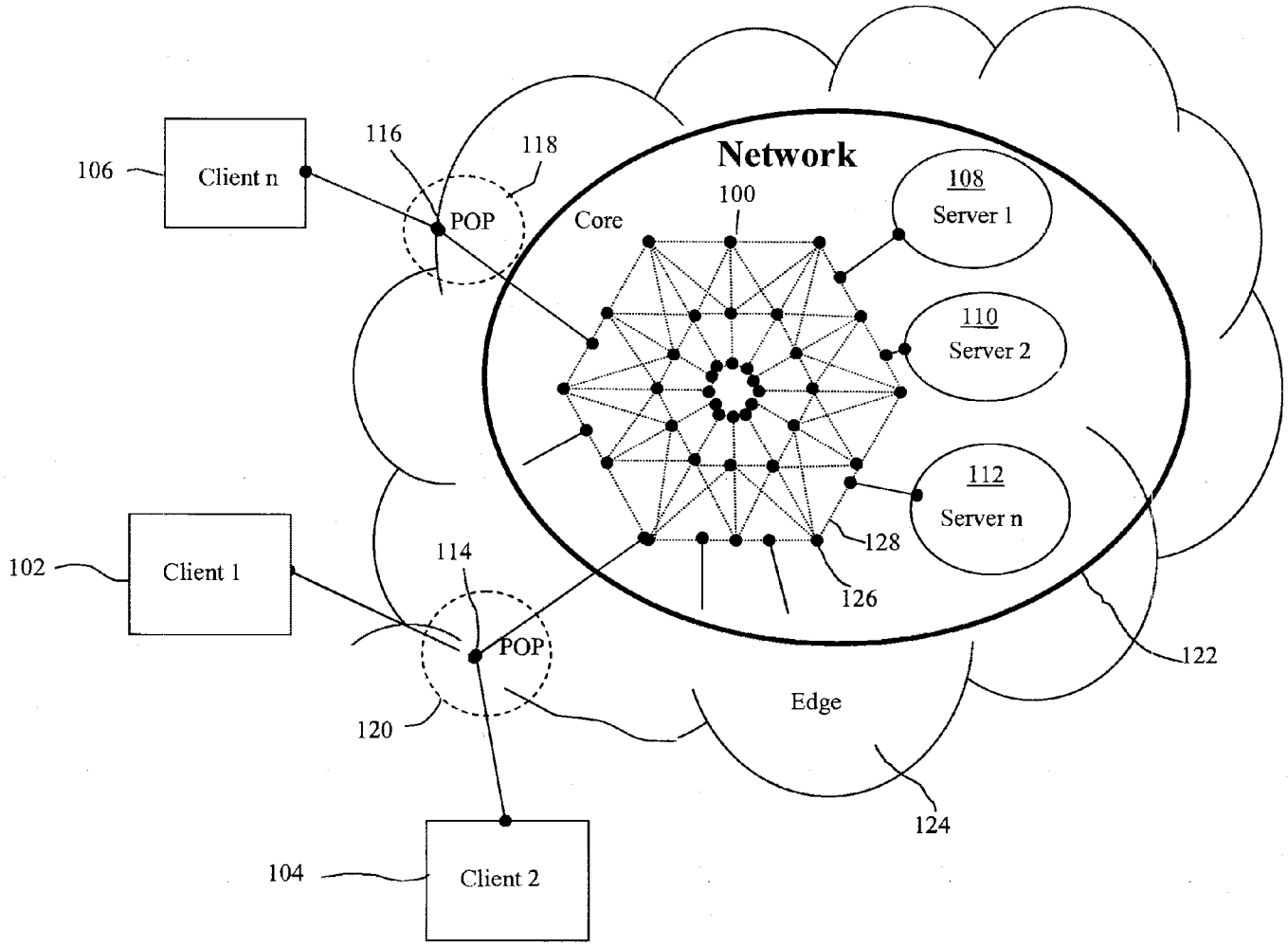
Network
100
Core
Edge
108
Server 1
110
Server 2
112
Server n
Client n
106
Client 1
102
Client 2
104
POP
116
118
POP
114
120
122
124
126
128

FIG. 2

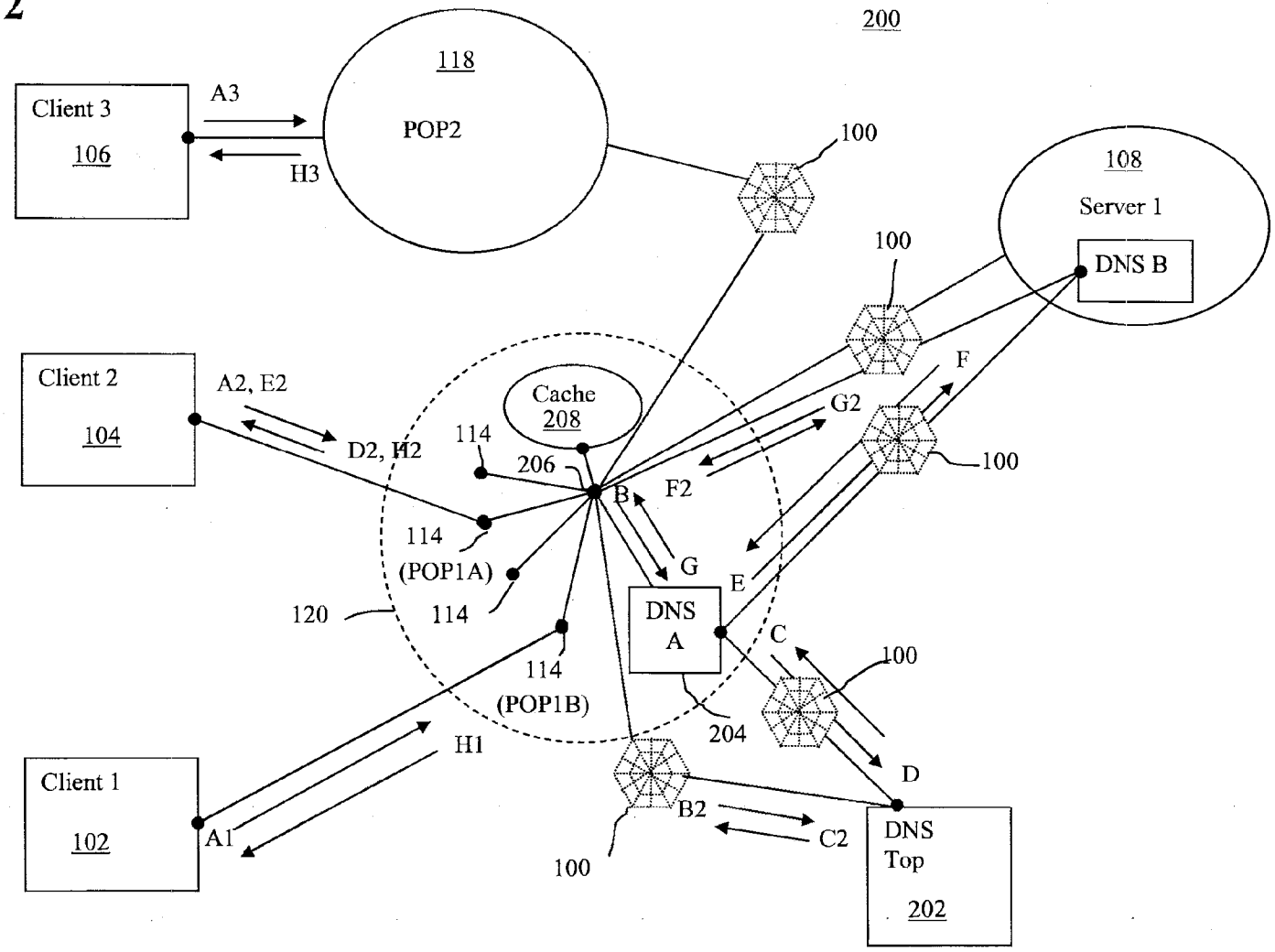
200
118
POP2
Client 3
106
A3
H3
100
108
Server 1
DNS B
100
Client 2
104
A2, E2
D2, H2
Cache
208
114
206
B
F2
G2
F
100
114
(POP1A)
114
G
E
120
DNS
A
C
100
114
(POP1B)
204
H1
D
Client 1
102
A1
B2
C2
DNS
Top
202
100

FIG. 3

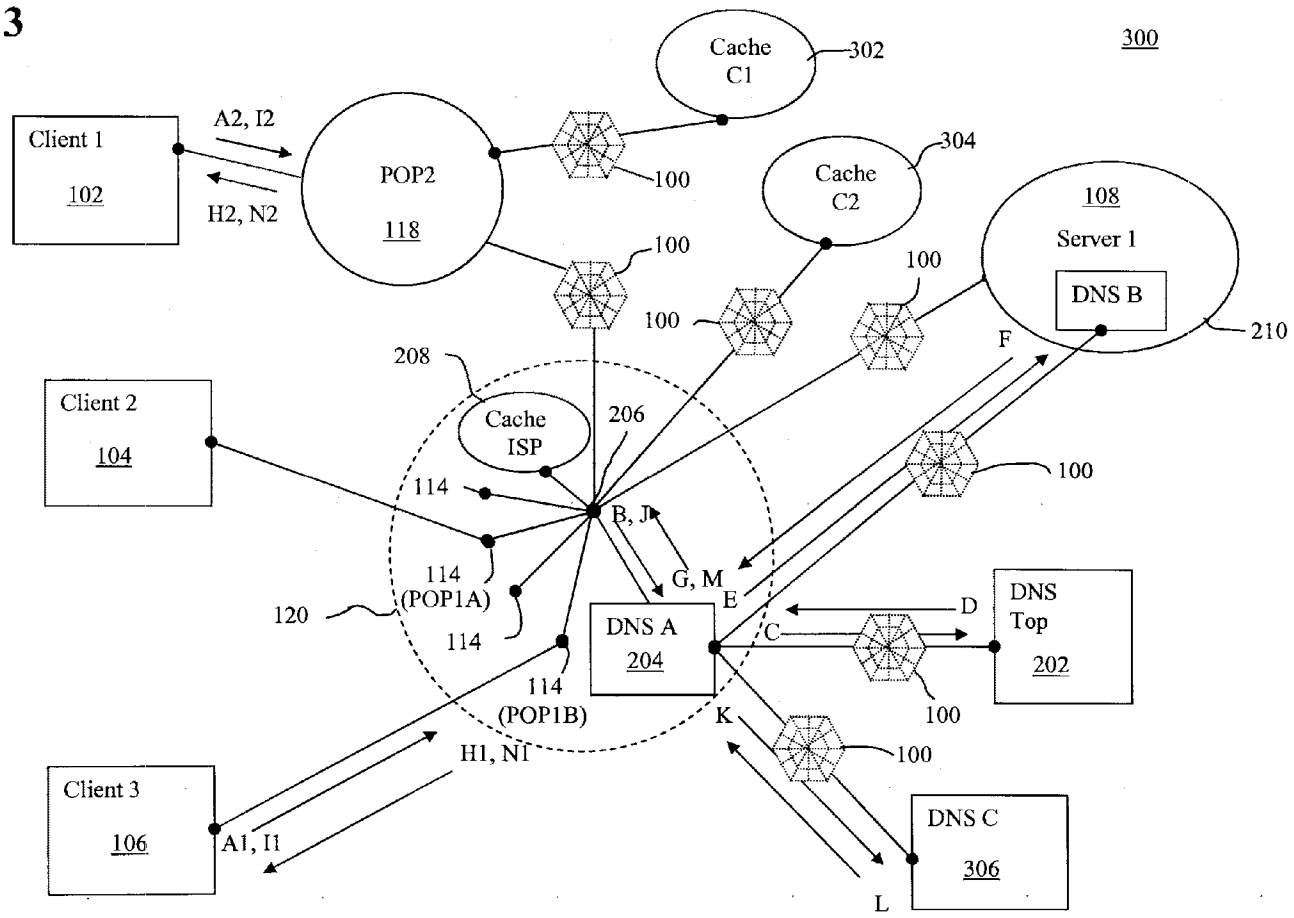
300
Cache C1
302
Client 1
102
A2, I2
H2, N2
POP2
118
100
Cache C2
304
108
Server 1
DNS B
210
F
Client 2
104
208
Cache ISP
206
114
B, J
G, M
E
114 (POP1A)
120
114
114 (POP1B)
DNS A
204
C
D
DNS Top
202
K
H1, N1
Client 3
106
A1, I1
DNS C
306
L

FIG. 4

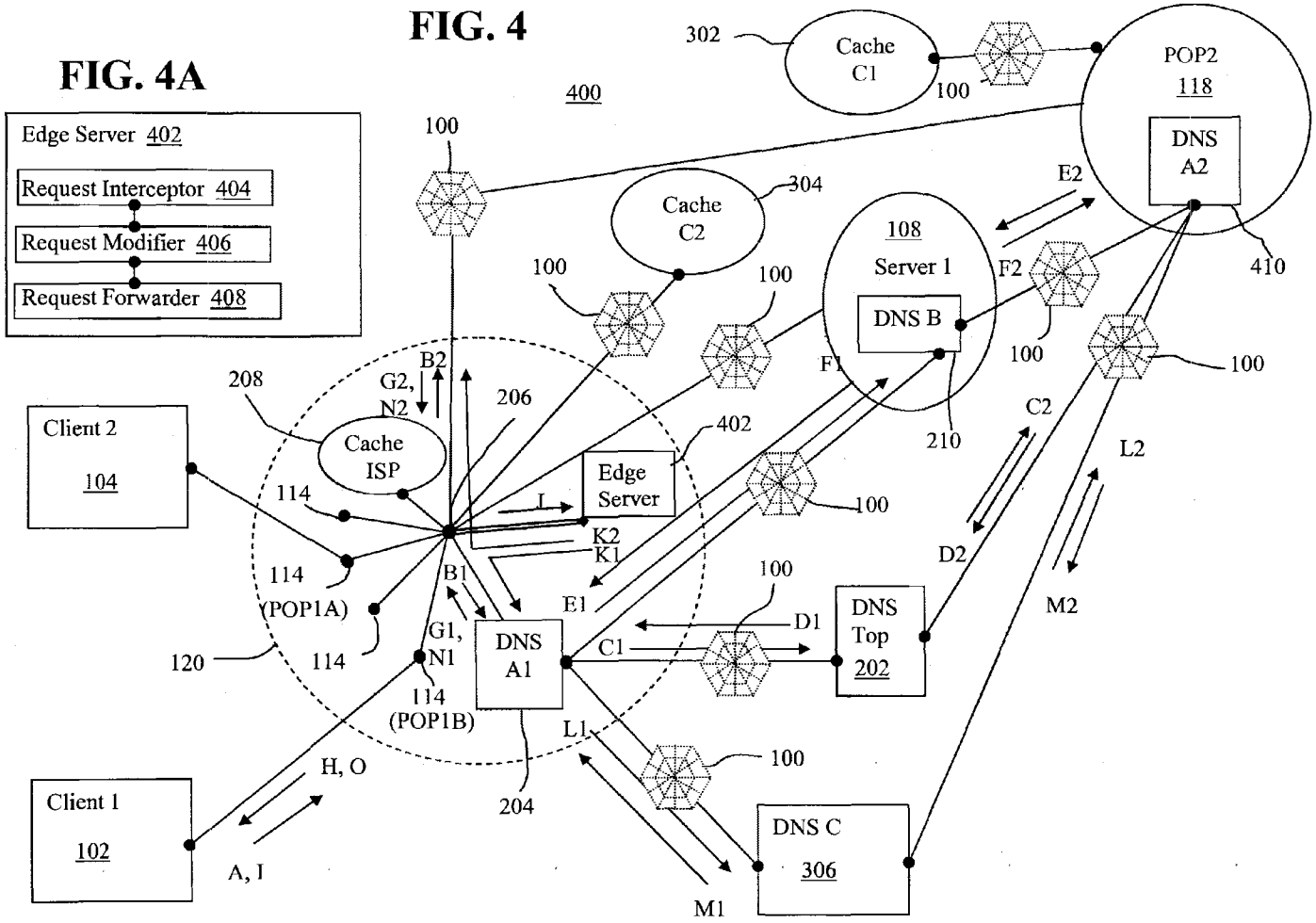
400
302
Cache C1
100
POP2
118
DNS A2
410
E2
F2
108
Server 1
DNS B
210
F1
304
Cache C2
100
208
Client 2
104
Cache ISP
G2, N2
B2
206
402
Edge Server
I
K2
K1
114
114 (POP1A)
114
120
B1
G1, N1
114 (POP1B)
DNS A1
204
E1
C1
D1
DNS Top
202
C2
D2
L2
M2
L1
M1
DNS C
306
Client 1
102
H, O
A, I

FIG. 4A


Edge Server 402
Request Interceptor 404
Request Modifier 406
Request Forwarder 408

FIG. 5A

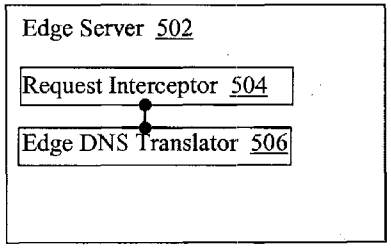
Edge Server 502
Request Interceptor 504
Edge DNS Translator 506

FIG. 5

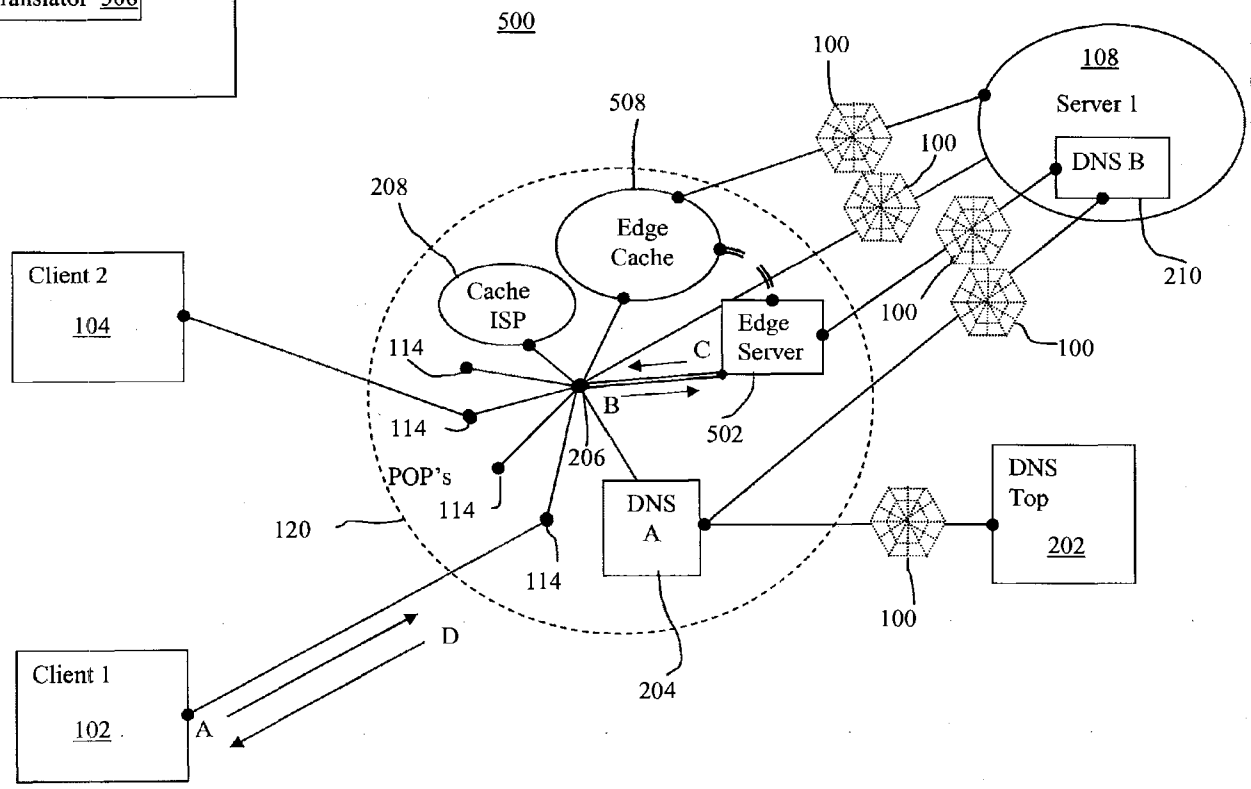
500
100
108
Server 1
DNS B
210
508
Edge Cache
208
Cache ISP
Client 2
104
114
C
Edge Server
B
502
206
POP's
120
DNS A
DNS Top
202
204
Client 1
102
A
D

FIG. 6

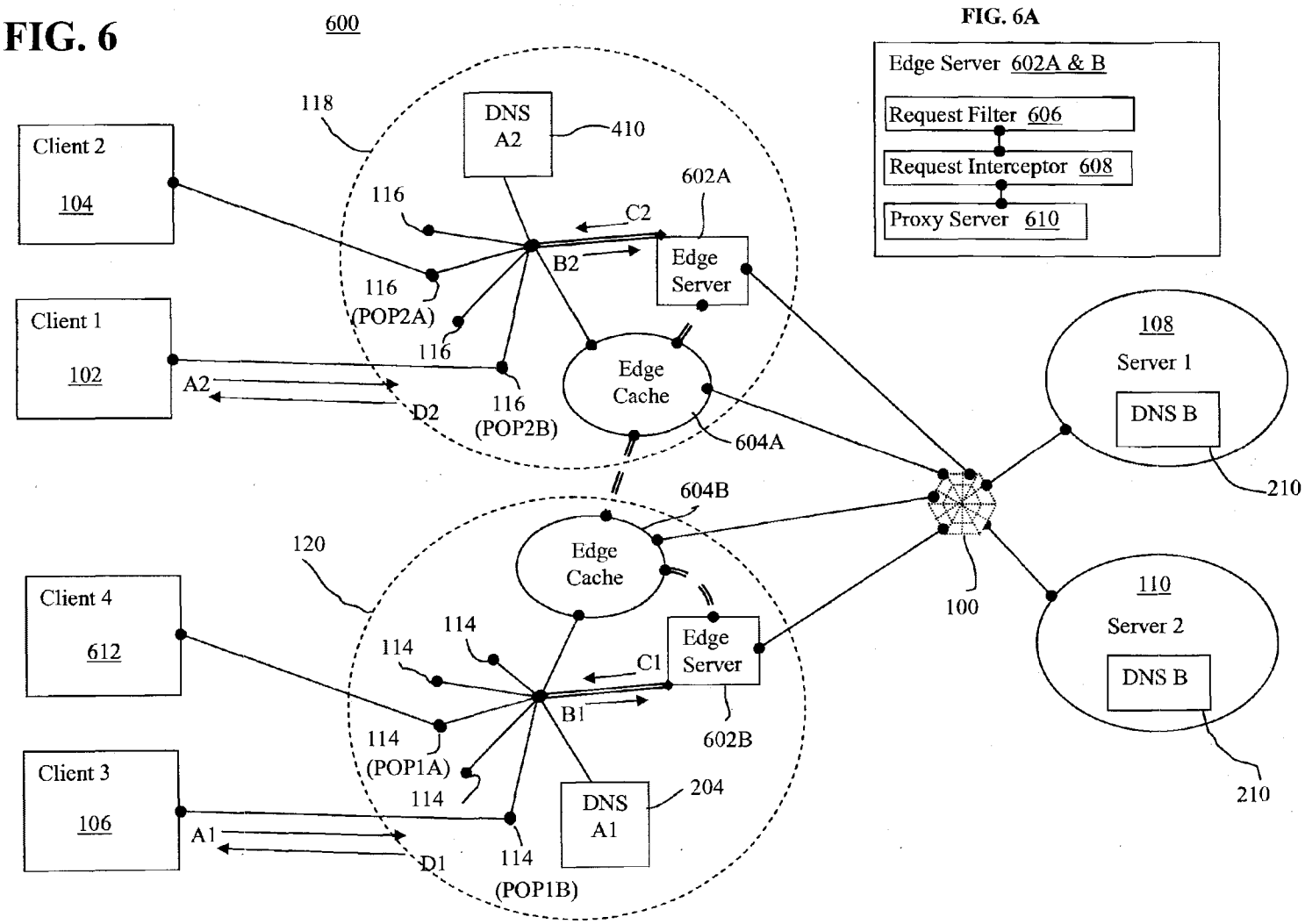
600
118
DNS A2
410
Client 2
104
116
602A
C2
B2
Edge Server
116 (POP2A)
Client 1
102
116
A2
D2
116 (POP2B)
Edge Cache
604A
604B
120
Edge Cache
Client 4
612
114
114
C1
Edge Server
B1
114 (POP1A)
602B
Client 3
106
114
DNS A1
204
A1
D1
114 (POP1B)
108
Server 1
DNS B
210
100
110
Server 2
DNS B
210

FIG. 6A


Edge Server 602A & B
Request Filter 606
Request Interceptor 608
Proxy Server 610

FIG. 7

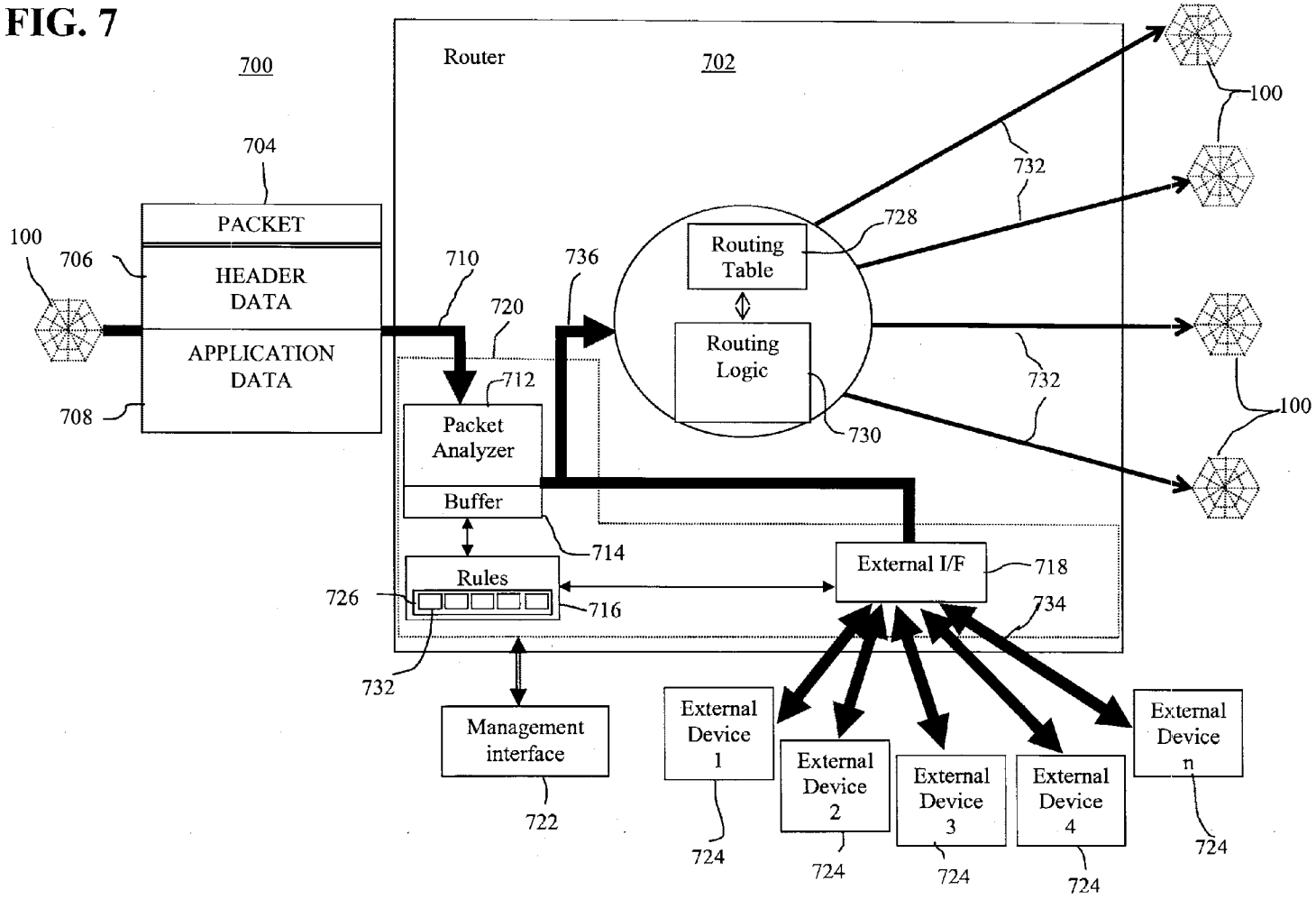
700
Router
702
704
PACKET
HEADER DATA
APPLICATION DATA
100
706
708
710
720
712
Packet Analyzer
Buffer
714
Rules
716
726
732
736
Routing Table
Routing Logic
728
730
732
732
100
100
External I/F
718
734
Management interface
722
External Device 1
External Device 2
External Device 3
External Device 4
External Device n
724
724
724
724
724

FIG. 8

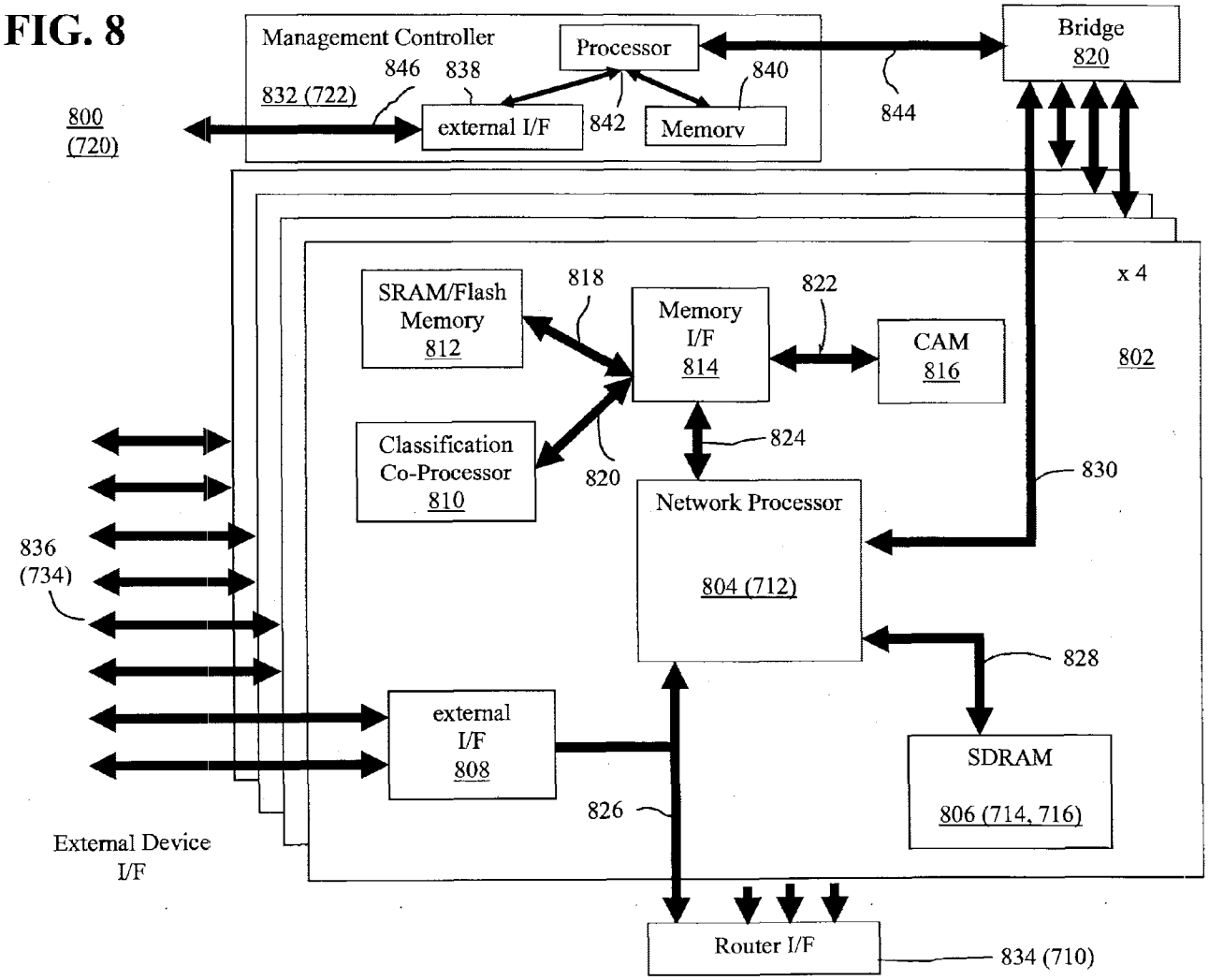
Management Controller
Processor
Bridge
820
846
838
840
832 (722)
800
(720)
external I/F
842
Memory
844
x 4
802
SRAM/Flash
Memory
812
818
Memory
I/F
814
822
CAM
816
Classification
Co-Processor
810
820
824
830
Network Processor
804 (712)
836
(734)
828
external
I/F
808
SDRAM
806 (714, 716)
826
External Device
I/F
Router I/F
834 (710)

FIG. 9

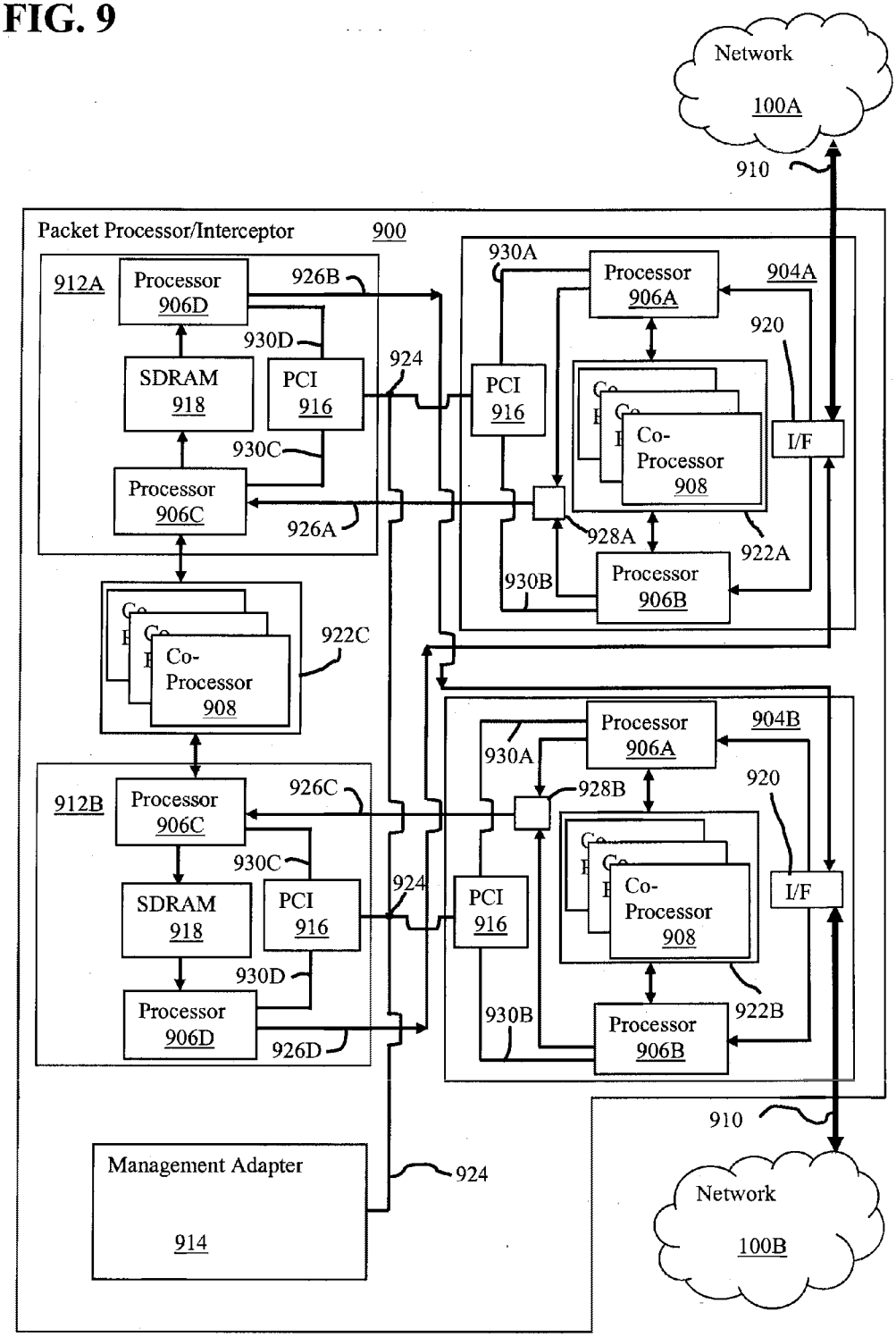
Network
100A
910
Packet Processor/Interceptor
900
912A
Processor
906D
926B
930D
SDRAM
918
PCI
916
924
930C
Processor
906C
926A
930A
Processor
906A
904A
920
PCI
916
Co-
Processor
908
I/F
928A
922A
930B
Processor
906B
Co-
Processor
908
922C
Processor
906A
904B
930A
928B
920
912B
Processor
906C
926C
930C
SDRAM
918
PCI
916
924
PCI
916
Co-
Processor
908
I/F
930D
Processor
906D
926D
930B
Processor
906B
922B
910
Management Adapter
914
924
Network
100B

FIG. 10

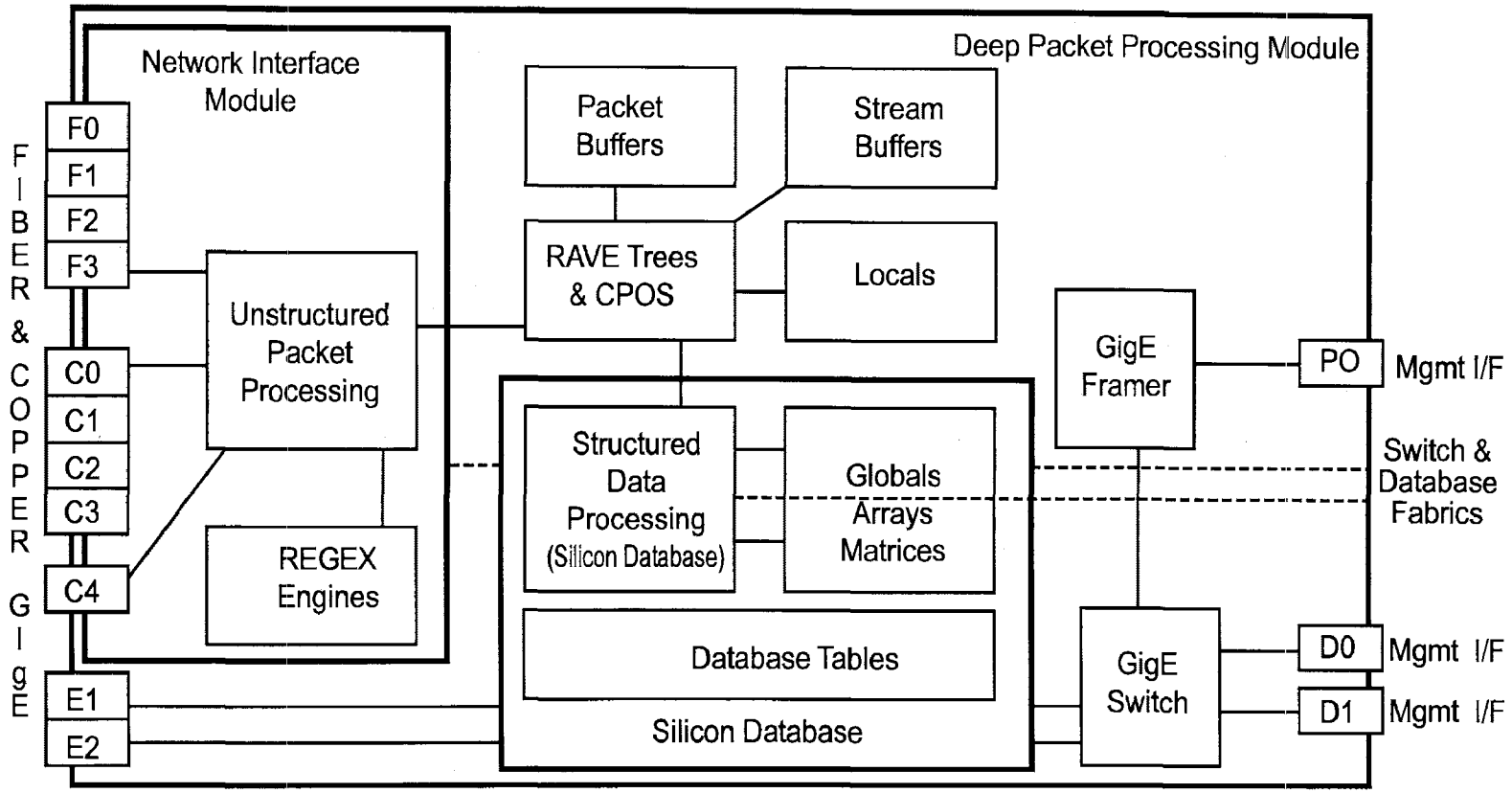
Deep Packet Processing Module
Network Interface Module
FIBER & COPPER GIGE
F0
F1
F2
F3
C0
C1
C2
C3
C4
E1
E2
Unstructured Packet Processing
REGEX Engines
Packet Buffers
Stream Buffers
RAVE Trees & CPOS
Locals
Structured Data Processing (Silicon Database)
Globals
Arrays
Matrices
Database Tables
Silicon Database
GigE Framer
GigE Switch
PO
D0
D1
Mgmt I/F
Mgmt I/F
Mgmt I/F
Switch & Database Fabrics

FIG. 11

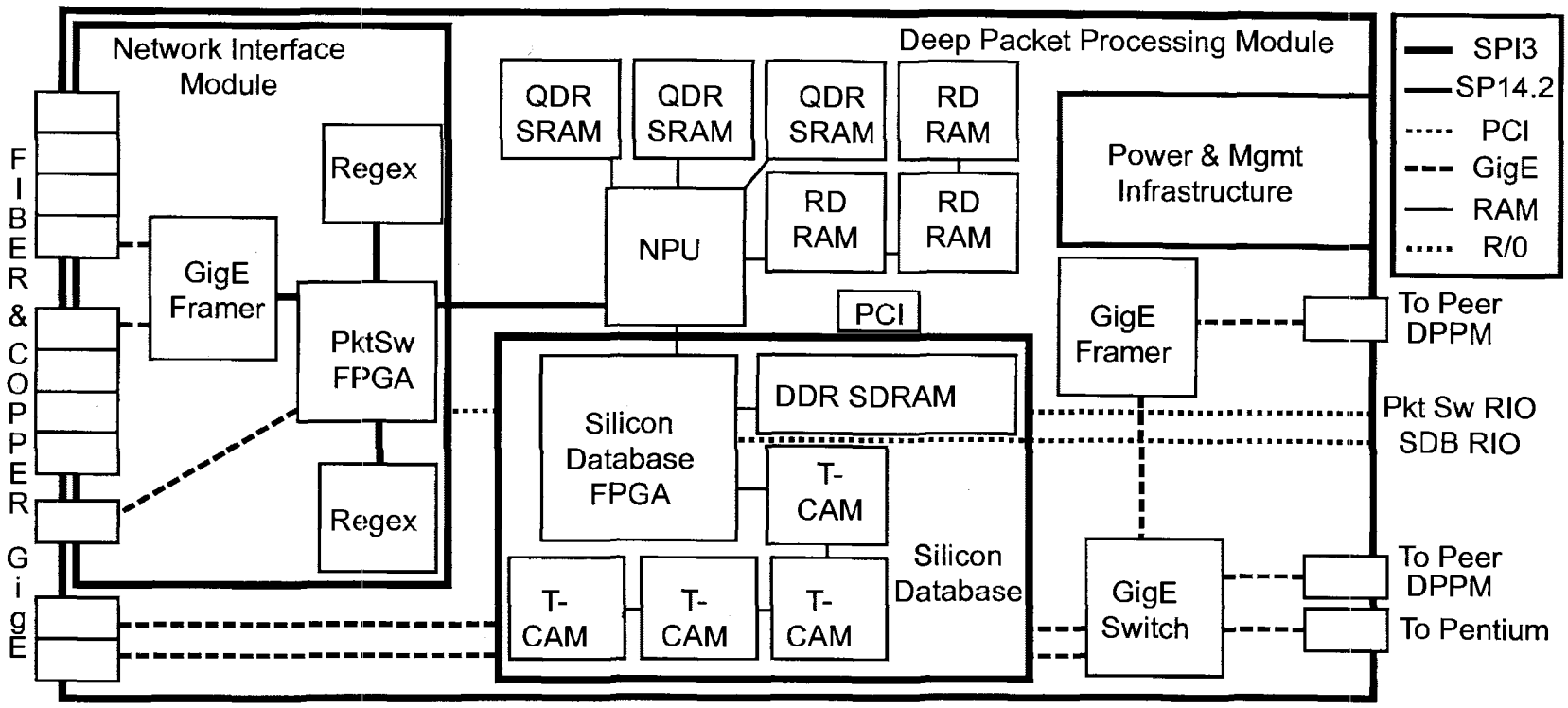
Network Interface Module
Deep Packet Processing Module
FIBER & COPPER GigE
Regex
GigE Framer
PktSw FPGA
Regex
QDR SRAM
QDR SRAM
QDR SRAM
RD RAM
RD RAM
RD RAM
NPU
PCI
Power & Mgmt Infrastructure
GigE Framer
Silicon Database FPGA
DDR SDRAM
T-CAM
T-CAM
T-CAM
T-CAM
Silicon Database
GigE Switch
SPI3
SP14.2
PCI
GigE
RAM
R/0
To Peer DPPM
Pkt Sw RIO
SDB RIO
To Peer DPPM
To Pentium

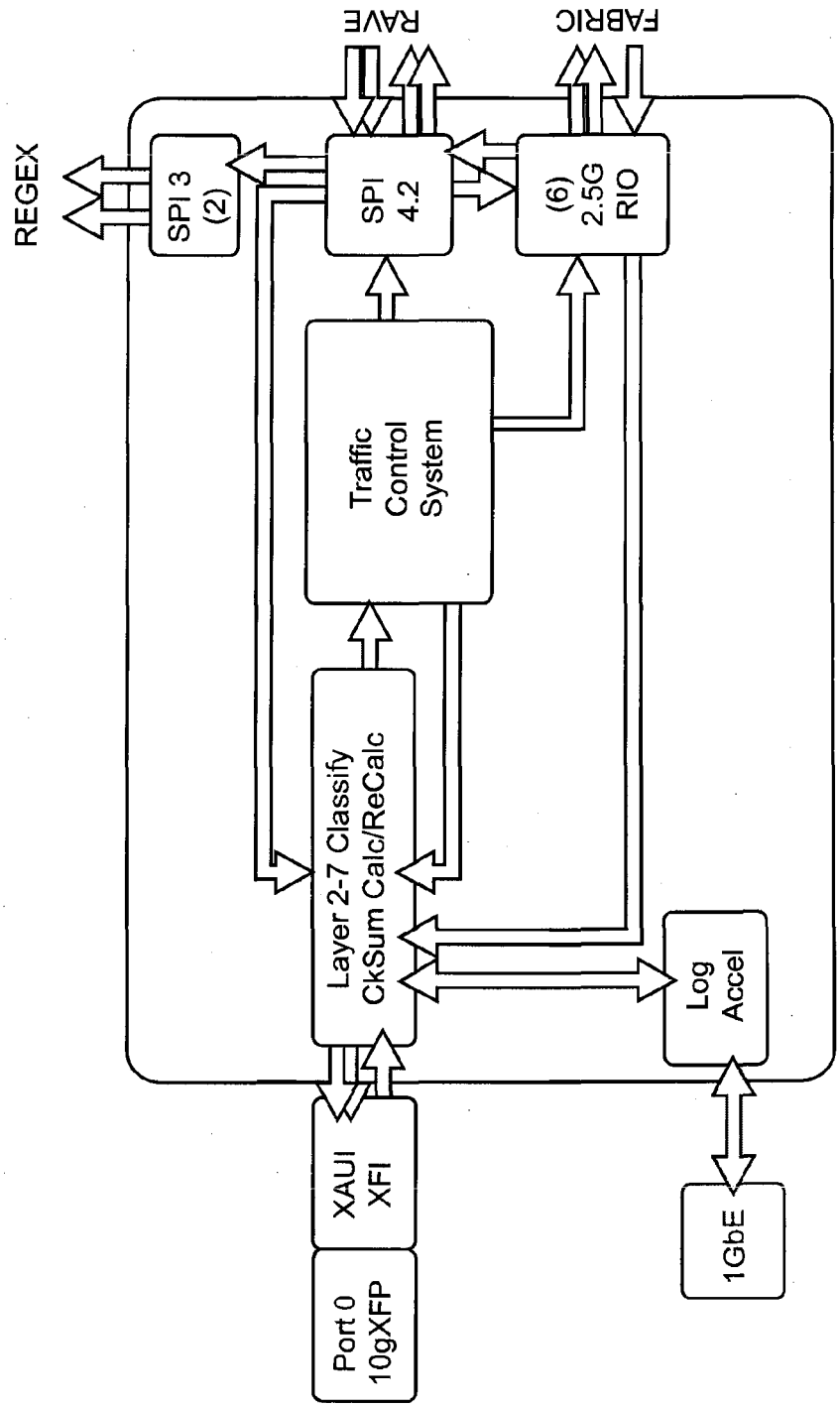
REGEX
SPI 3
(2)
RAVE
SPI
4.2
FABRIC
(6)
2.5G
RIO
Traffic
Control
System
Layer 2-7 Classify
CkSum Calc/ReCalc
Log
Accel
XAUI
XFI
Port 0
10gXFP
1GbE

FIG. 12

FIG. 13

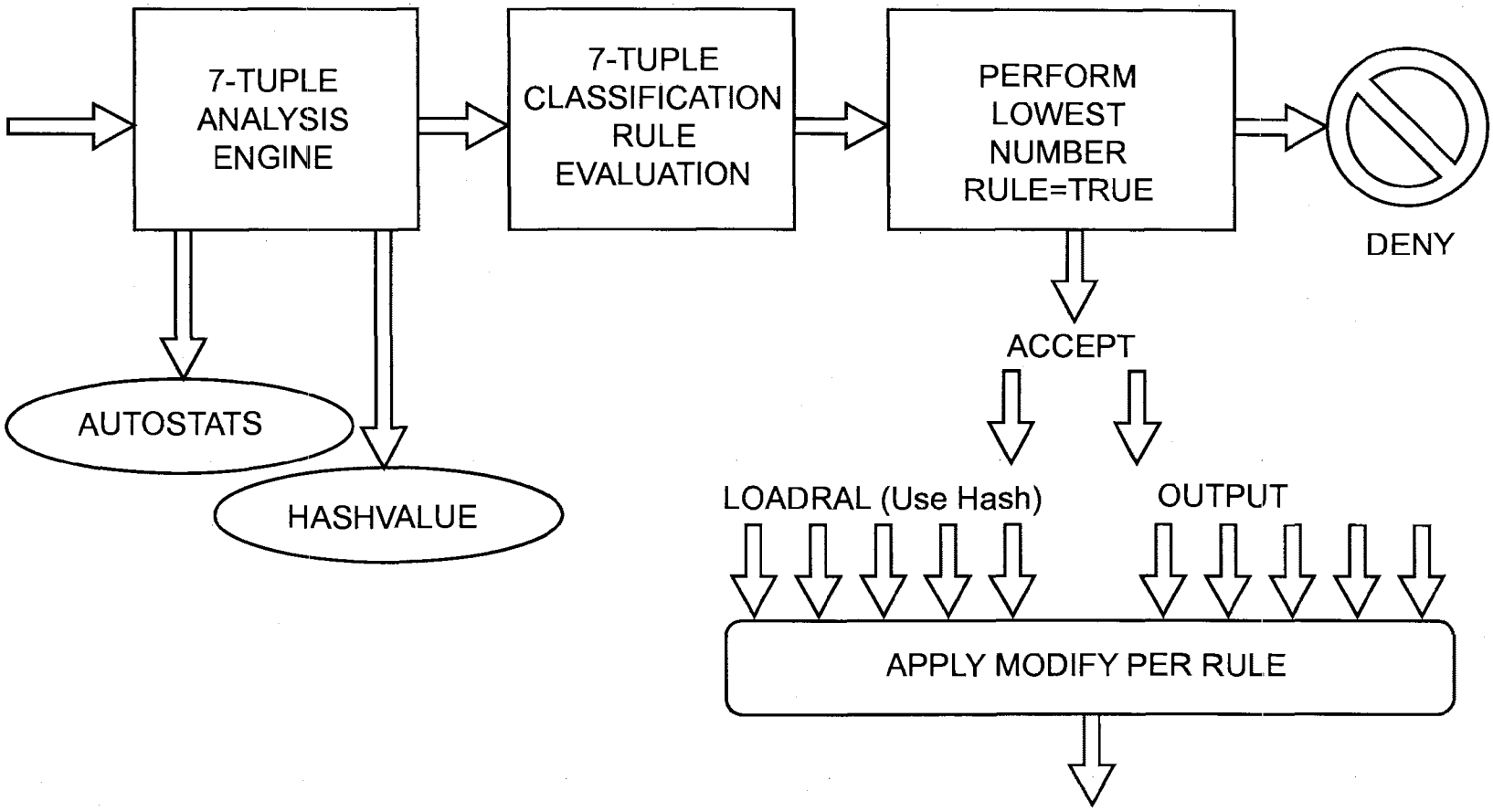
7-TUPLE ANALYSIS ENGINE
7-TUPLE CLASSIFICATION RULE EVALUATION
PERFORM LOWEST NUMBER RULE=TRUE
DENY
ACCEPT
AUTOSTATS
HASHVALUE
LOADRAL (Use Hash)
OUTPUT
APPLY MODIFY PER RULE

FIG. 14

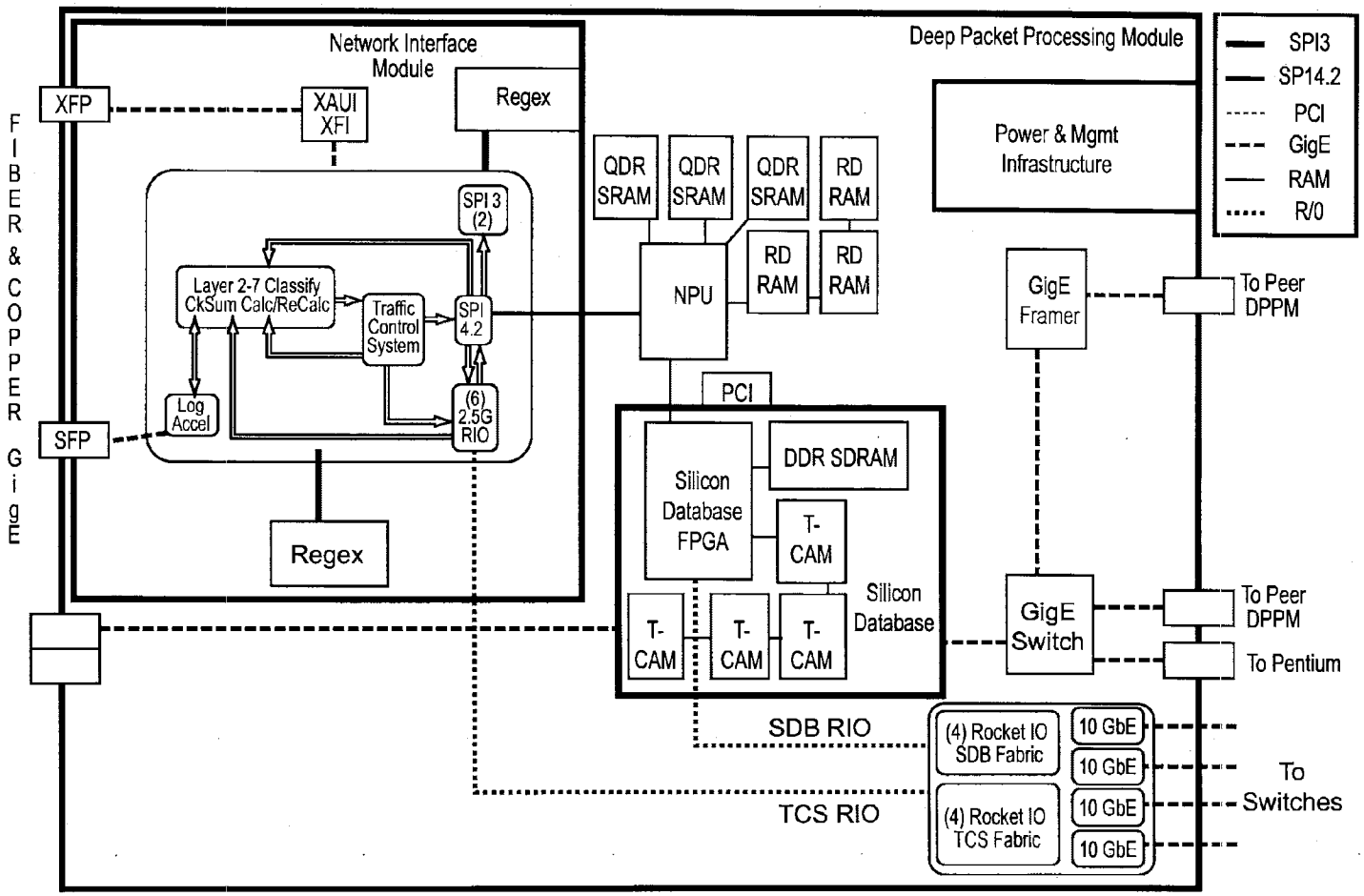
FIBER & COPPER GigE
XFP
SFP
Network Interface Module
XAUI XFI
Regex
SPI 3 (2)
Layer 2-7 Classify CkSum Calc/ReCalc
Traffic Control System
SPI 4.2
Log Accel
(6) 2.5G RIO
Regex
Deep Packet Processing Module
QDR SRAM
QDR SRAM
QDR SRAM
RD RAM
RD RAM
RD RAM
NPU
PCI
Silicon Database FPGA
DDR SDRAM
T-CAM
T-CAM
T-CAM
T-CAM
Silicon Database
Power & Mgmt Infrastructure
GigE Framer
GigE Switch
To Peer DPPM
To Peer DPPM
To Pentium
SDB RIO
TCS RIO
(4) Rocket IO SDB Fabric
(4) Rocket IO TCS Fabric
10 GbE
10 GbE
10 GbE
10 GbE
To Switches
SPI3
SP14.2
PCI
GigE
RAM
R/0

FIG. 15

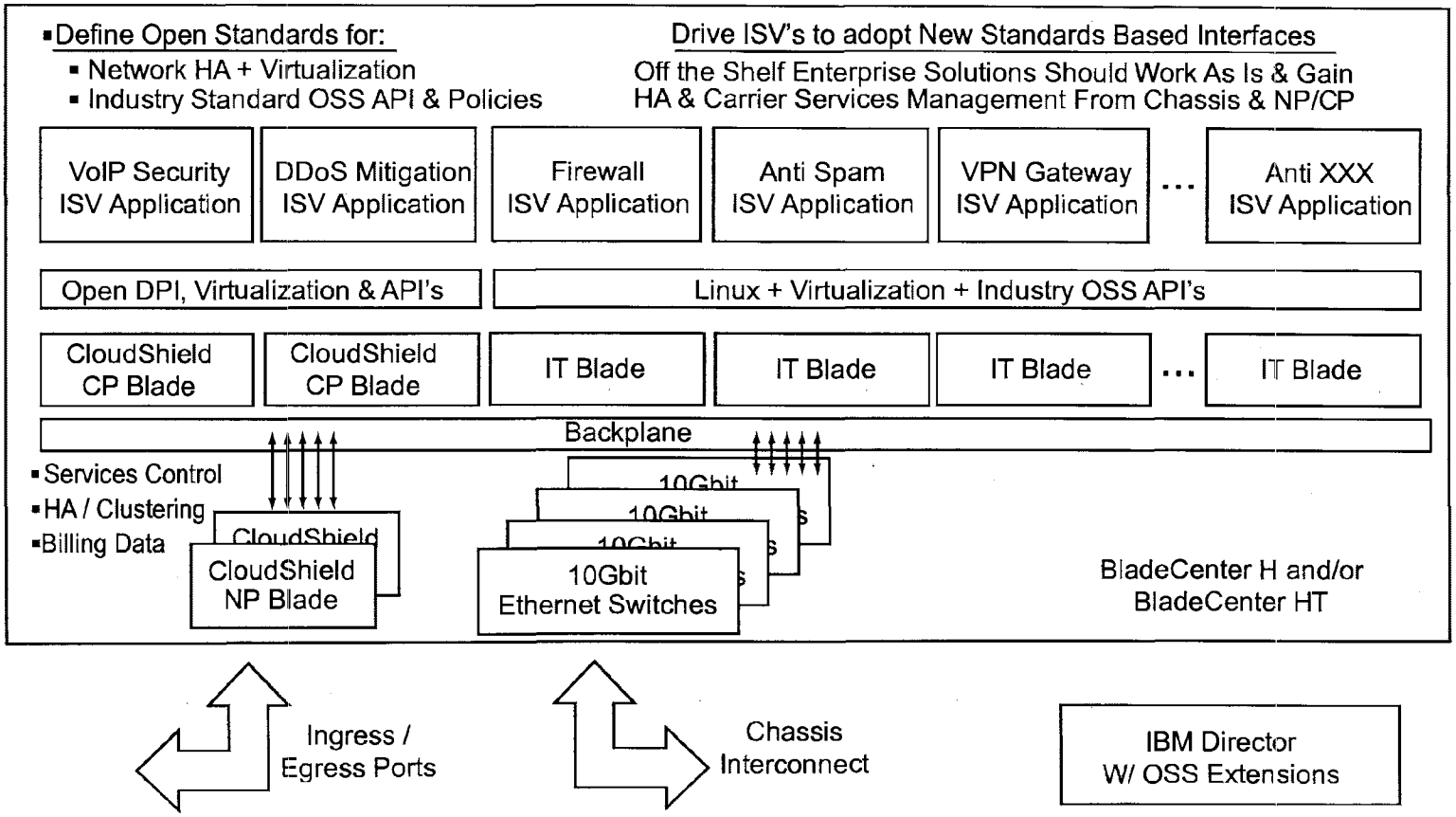
▪Define Open Standards for:
▪ Network HA + Virtualization
▪ Industry Standard OSS API & Policies
Drive ISV's to adopt New Standards Based Interfaces
Off the Shelf Enterprise Solutions Should Work As Is & Gain
HA & Carrier Services Management From Chassis & NP/CP
VoIP Security ISV Application
DDoS Mitigation ISV Application
Firewall ISV Application
Anti Spam ISV Application
VPN Gateway ISV Application
...
Anti XXX ISV Application
Open DPI, Virtualization & API's
Linux + Virtualization + Industry OSS API's
CloudShield CP Blade
CloudShield CP Blade
IT Blade
IT Blade
IT Blade
...
IT Blade
Backplane
▪Services Control
▪HA / Clustering
▪Billing Data
CloudShield NP Blade
10Gbit Ethernet Switches
BladeCenter H and/or BladeCenter HT
Ingress / Egress Ports
Chassis Interconnect
IBM Director W/ OSS Extensions

# FIG. 16

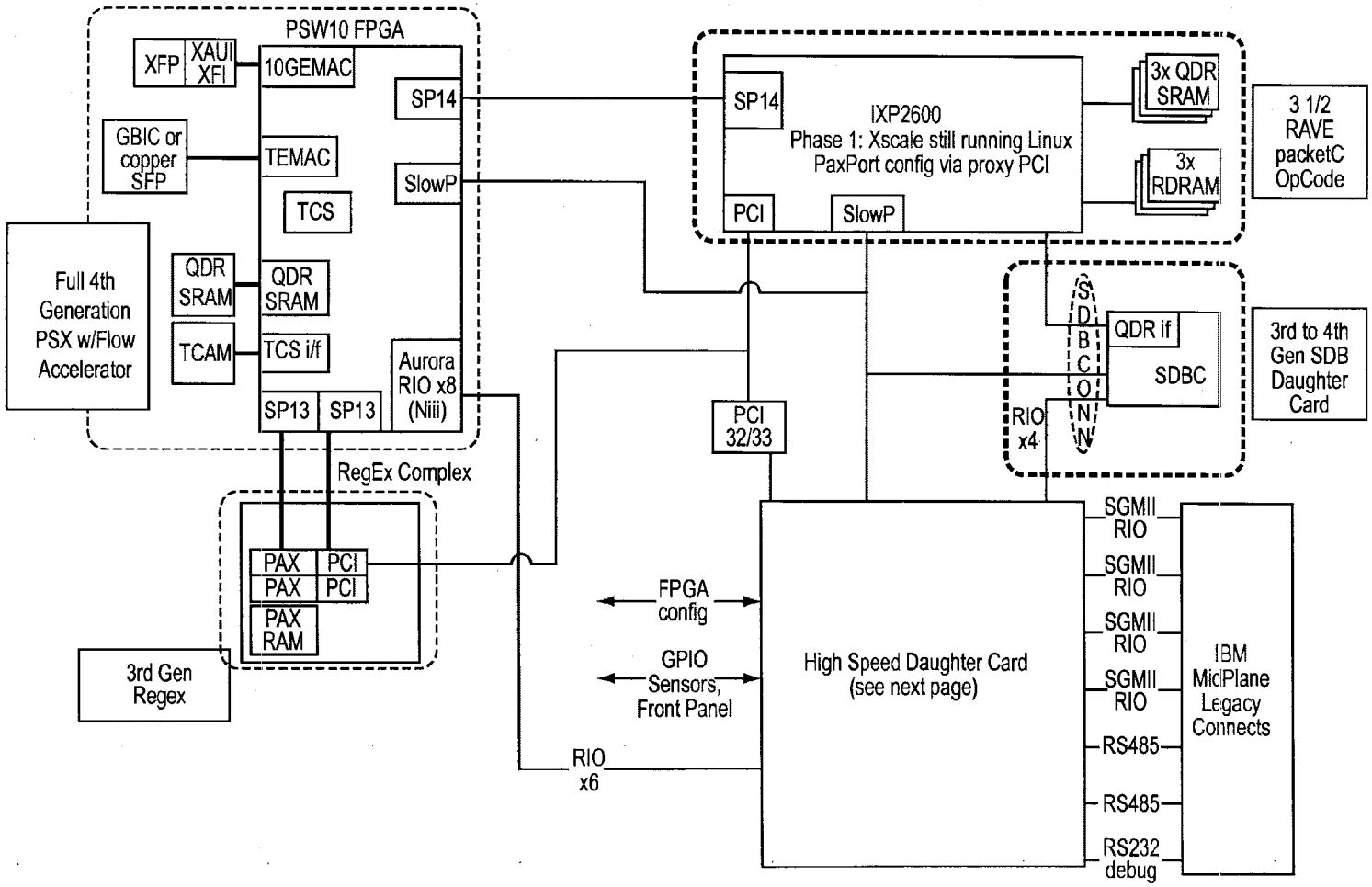
PSW10 FPGA
XFP
XAUI XFI
10GEMAC
SP14
GBIC or copper SFP
TEMAC
SlowP
TCS
Full 4th Generation PSX w/Flow Accelerator
QDR SRAM
QDR SRAM
TCAM
TCS i/f
Aurora RIO x8 (Niii)
SP13
SP13
RegEx Complex
PAX
PCI
PAX
PCI
PAX RAM
3rd Gen Regex
SP14
IXP2600
Phase 1: Xscale still running Linux
PaxPort config via proxy PCI
PCI
SlowP
3x QDR SRAM
3x RDRAM
3 1/2 RAVE packetC OpCode
SDBCONN
QDR if
SDBC
RIO x4
3rd to 4th Gen SDB Daughter Card
PCI 32/33
FPGA config
GPIO Sensors, Front Panel
RIO x6
High Speed Daughter Card (see next page)
SGMII RIO
SGMII RIO
SGMII RIO
SGMII RIO
RS485
RS485
RS232 debug
IBM MidPlane Legacy Connects

FIG. 17A

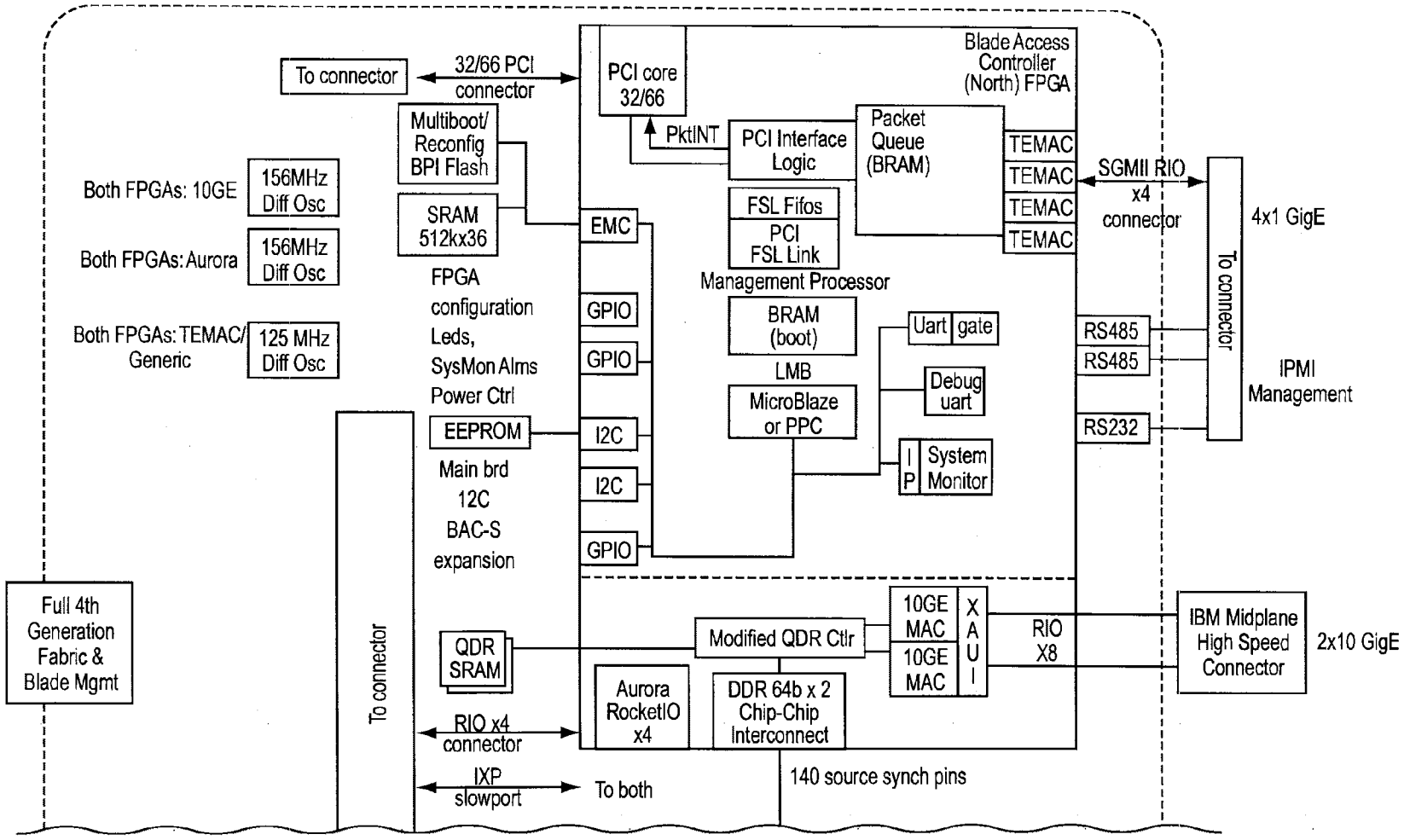
To connector
32/66 PCI connector
PCI core 32/66
Blade Access Controller (North) FPGA
Multiboot/ Reconfig BPI Flash
PktINT
PCI Interface Logic
Packet Queue (BRAM)
TEMAC
TEMAC
TEMAC
TEMAC
SGMII RIO x4 connector
4x1 GigE
Both FPGAs: 10GE
156MHz Diff Osc
Both FPGAs: Aurora
156MHz Diff Osc
SRAM 512kx36
EMC
FSL Fifos
PCI FSL Link
Management Processor
FPGA configuration Leds, SysMon Alms Power Ctrl
GPIO
GPIO
BRAM (boot)
LMB
MicroBlaze or PPC
Uart
gate
Debug uart
RS485
RS485
To connector
IPMI Management
Both FPGAs: TEMAC/ Generic
125 MHz Diff Osc
EEPROM
I2C
I2C
GPIO
Main brd 12C BAC-S expansion
I P
System Monitor
RS232
Full 4th Generation Fabric & Blade Mgmt
To connector
QDR SRAM
Modified QDR Ctlr
10GE MAC
10GE MAC
X A U I
RIO X8
IBM Midplane High Speed Connector
2x10 GigE
Aurora RocketIO x4
DDR 64b x 2 Chip-Chip Interconnect
RIO x4 connector
IXP slowport
To both
140 source synch pins

FIG. 17B

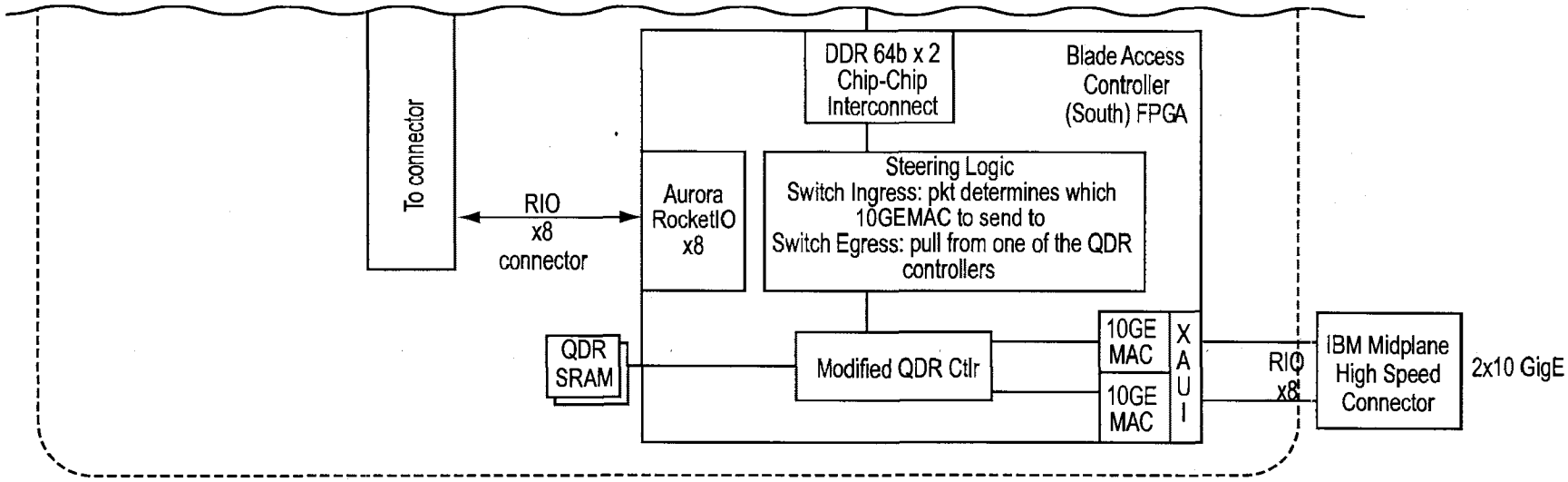
To connector
RIO
x8
connector
Aurora
RocketIO
x8
DDR 64b x 2
Chip-Chip
Interconnect
Blade Access
Controller
(South) FPGA
Steering Logic
Switch Ingress: pkt determines which
10GEMAC to send to
Switch Egress: pull from one of the QDR
controllers
QDR
SRAM
Modified QDR Ctlr
10GE
MAC
10GE
MAC
XAUI
RIO
x8
IBM Midplane
High Speed
Connector
2x10 GigE

FIG. 18

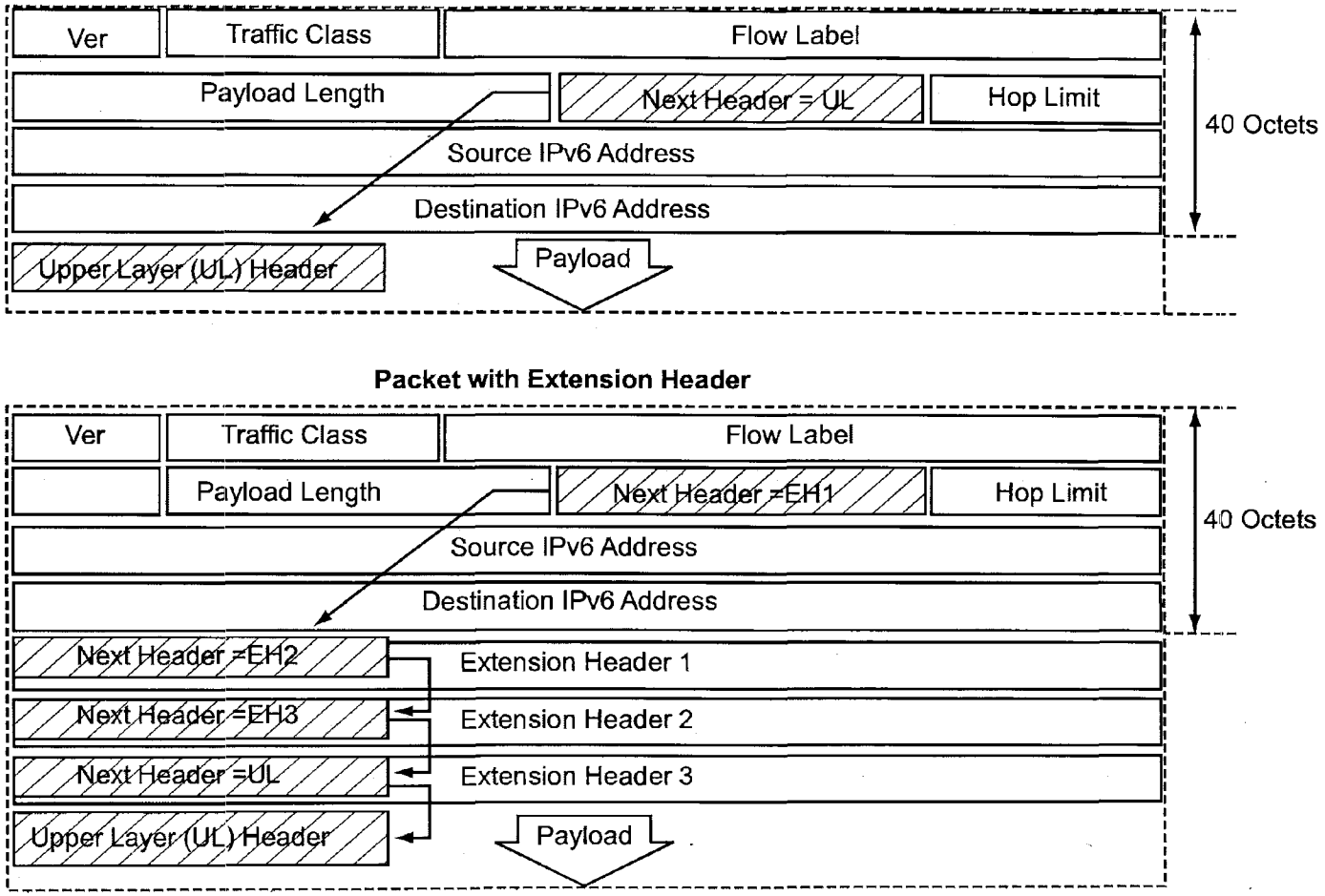
Ver
Traffic Class
Flow Label
Payload Length
Next Header = UL
Hop Limit
Source IPv6 Address
Destination IPv6 Address
Upper Layer (UL) Header
Payload
40 Octets
Packet with Extension Header
Ver
Traffic Class
Flow Label
Payload Length
Next Header =EH1
Hop Limit
Source IPv6 Address
Destination IPv6 Address
Next Header =EH2
Extension Header 1
Next Header =EH3
Extension Header 2
Next Header =UL
Extension Header 3
Upper Layer (UL) Header
Payload
40 Octets

FIG. 19

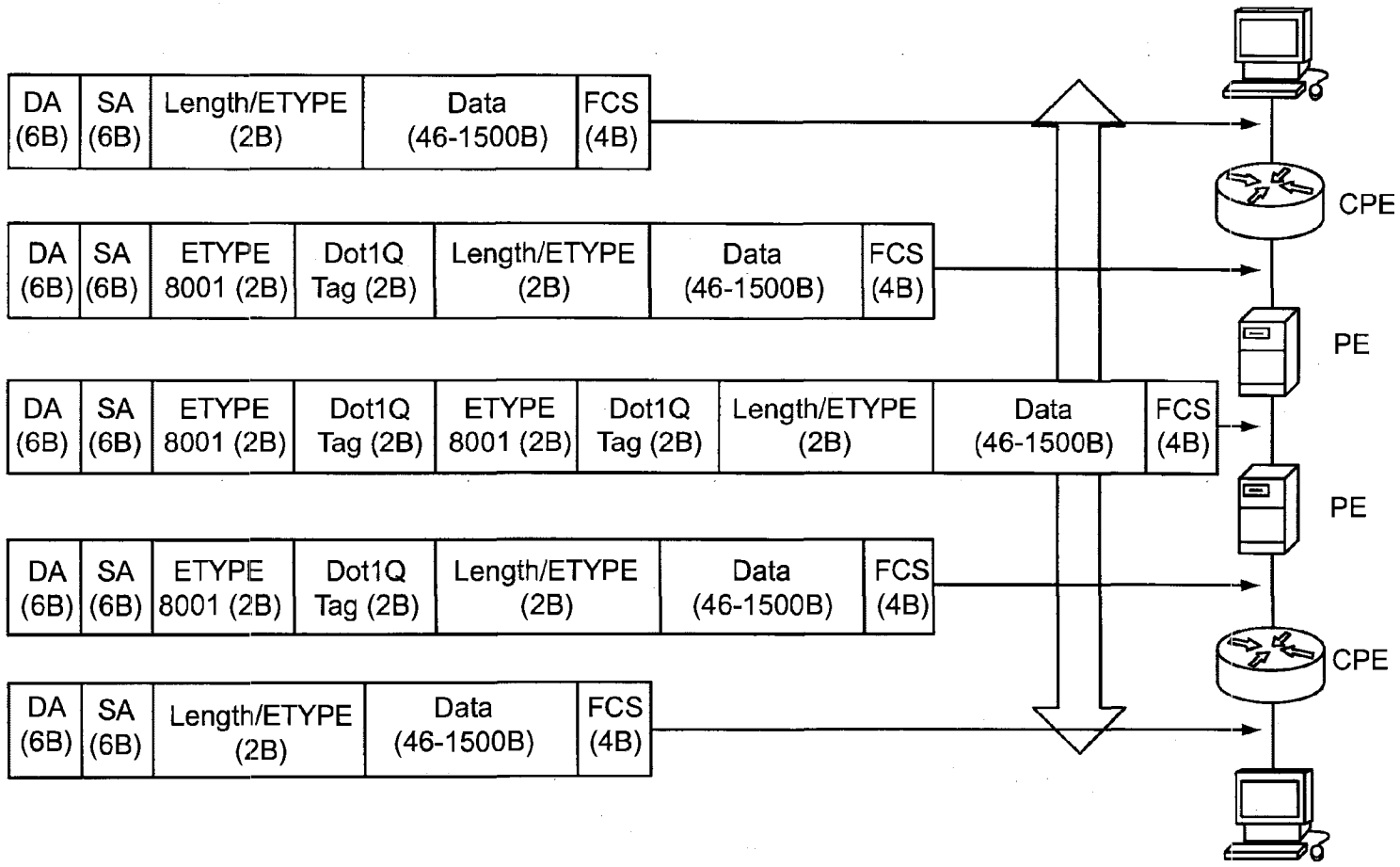
DA (6B)
SA (6B)
Length/ETYPE (2B)
Data (46-1500B)
FCS (4B)
DA (6B)
SA (6B)
ETYPE 8001 (2B)
Dot1Q Tag (2B)
Length/ETYPE (2B)
Data (46-1500B)
FCS (4B)
DA (6B)
SA (6B)
ETYPE 8001 (2B)
Dot1Q Tag (2B)
ETYPE 8001 (2B)
Dot1Q Tag (2B)
Length/ETYPE (2B)
Data (46-1500B)
FCS (4B)
DA (6B)
SA (6B)
ETYPE 8001 (2B)
Dot1Q Tag (2B)
Length/ETYPE (2B)
Data (46-1500B)
FCS (4B)
DA (6B)
SA (6B)
Length/ETYPE (2B)
Data (46-1500B)
FCS (4B)
CPE
PE
PE
CPE

FIG. 20

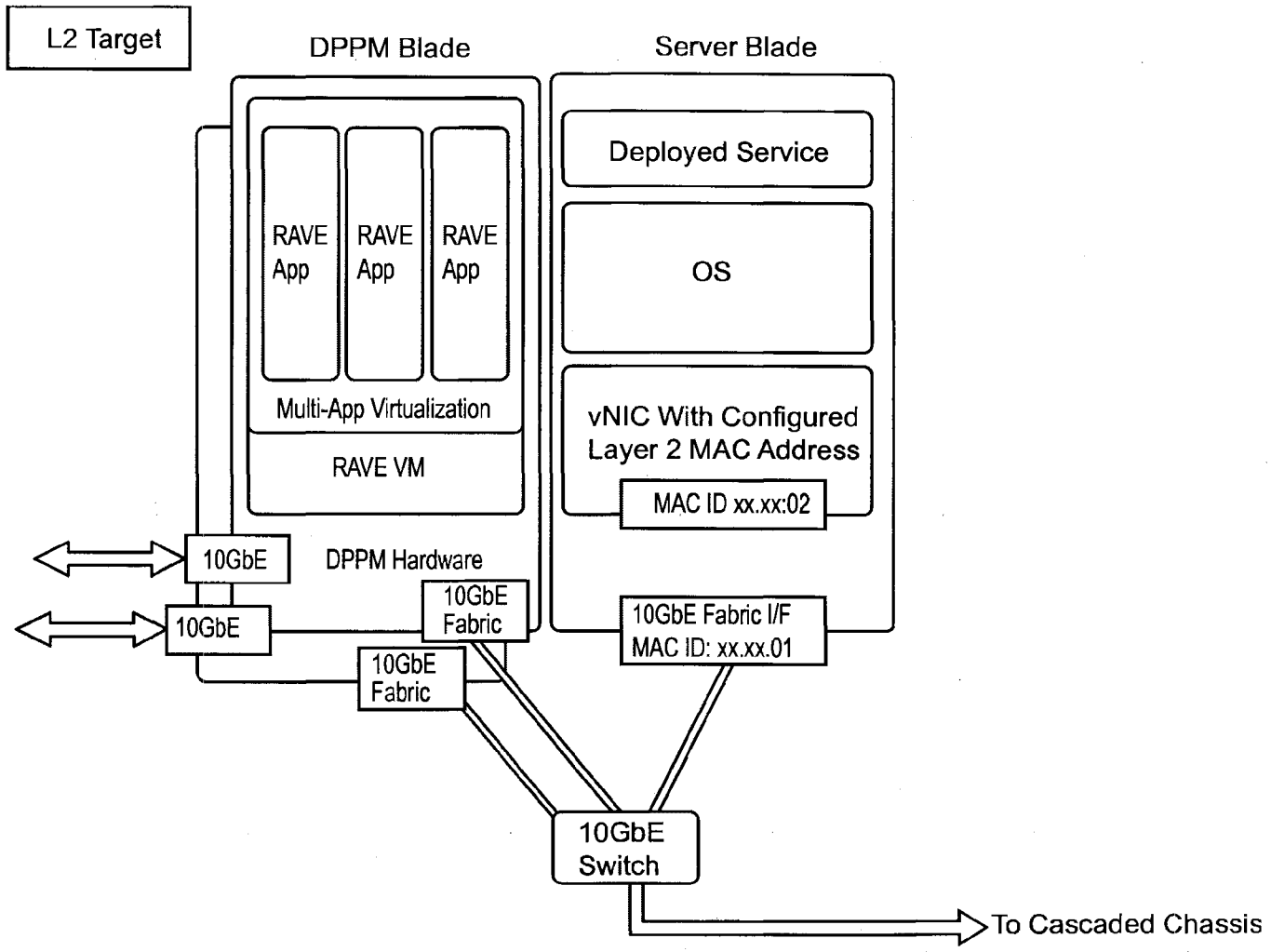
L2 Target
DPPM Blade
Server Blade
RAVE App
RAVE App
RAVE App
Multi-App Virtualization
RAVE VM
Deployed Service
OS
vNIC With Configured Layer 2 MAC Address
MAC ID xx.xx:02
10GbE
10GbE
DPPM Hardware
10GbE Fabric
10GbE Fabric
10GbE Fabric I/F
MAC ID: xx.xx.01
10GbE Switch
To Cascaded Chassis

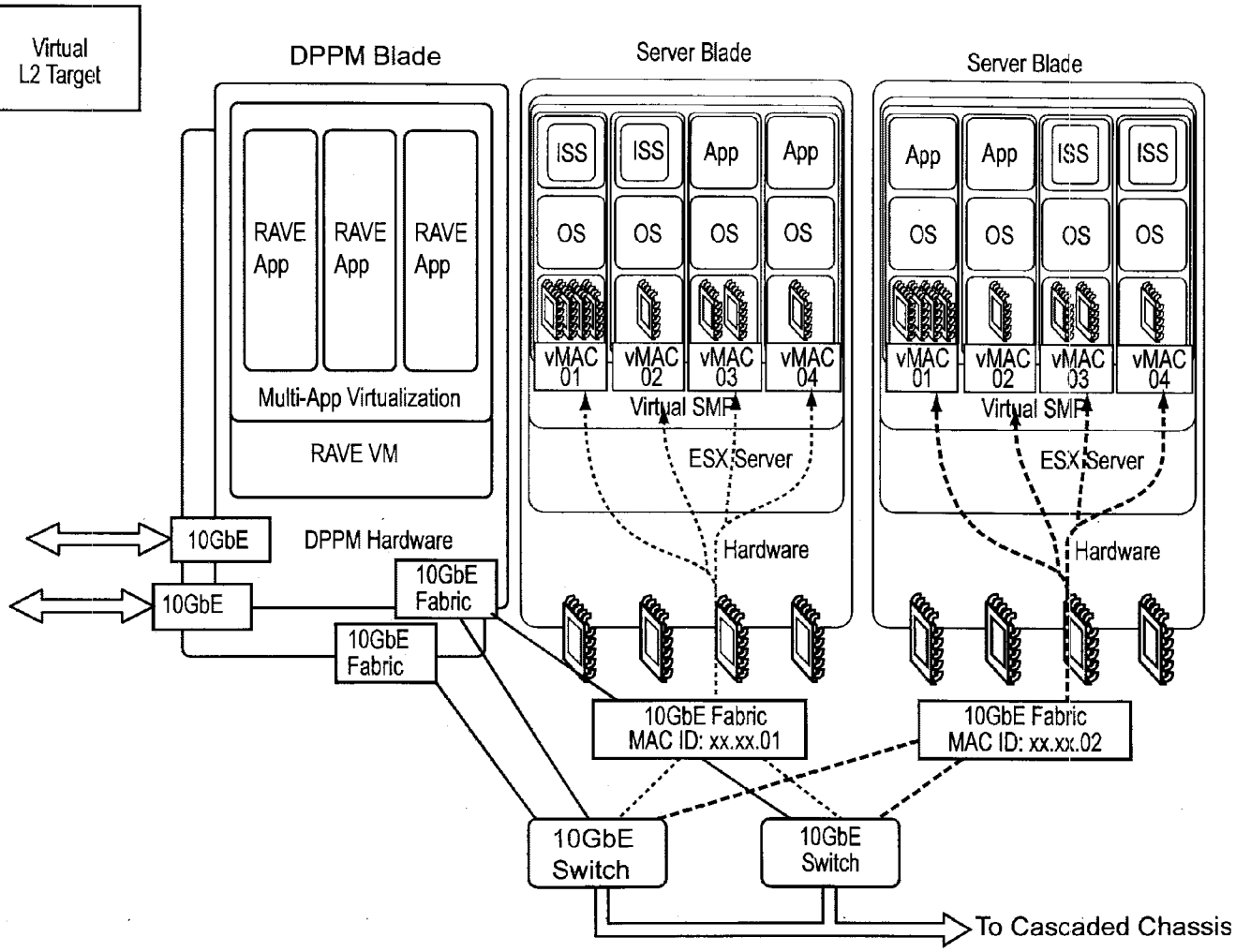
Virtual
L2 Target
DPPM Blade
RAVE
App
RAVE
App
RAVE
App
Multi-App Virtualization
RAVE VM
DPPM Hardware
10GbE
10GbE
10GbE
Fabric
10GbE
Fabric
Server Blade
ISS
ISS
App
App
OS
OS
OS
OS
vMAC
01
vMAC
02
vMAC
03
vMAC
04
Virtual SMP
ESX Server
Hardware
Server Blade
App
App
ISS
ISS
OS
OS
OS
OS
vMAC
01
vMAC
02
vMAC
03
vMAC
04
Virtual SMP
ESX Server
Hardware
10GbE Fabric
MAC ID: xx.xx.01
10GbE Fabric
MAC ID: xx.xx.02
10GbE
Switch
10GbE
Switch
To Cascaded Chassis

FIG. 21

# FIG. 22

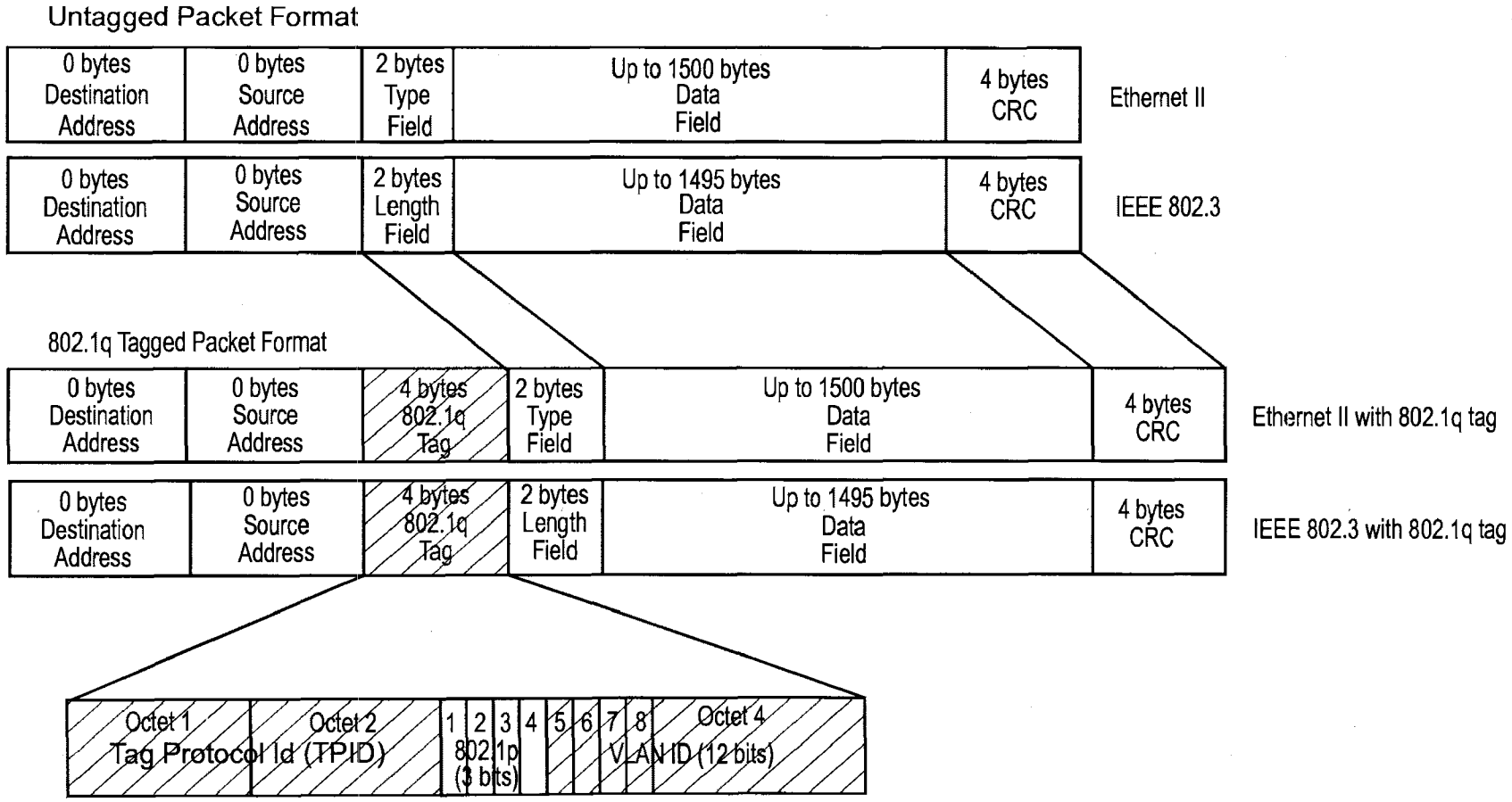
Untagged Packet Format
0 bytes Destination Address
0 bytes Source Address
2 bytes Type Field
Up to 1500 bytes Data Field
4 bytes CRC
Ethernet II
0 bytes Destination Address
0 bytes Source Address
2 bytes Length Field
Up to 1495 bytes Data Field
4 bytes CRC
IEEE 802.3
802.1q Tagged Packet Format
0 bytes Destination Address
0 bytes Source Address
4 bytes 802.1q Tag
2 bytes Type Field
Up to 1500 bytes Data Field
4 bytes CRC
Ethernet II with 802.1q tag
0 bytes Destination Address
0 bytes Source Address
4 bytes 802.1q Tag
2 bytes Length Field
Up to 1495 bytes Data Field
4 bytes CRC
IEEE 802.3 with 802.1q tag
Octet 1
Tag Protocol Id (TPID)
Octet 2
1 2 3 4 5 6 7 8
802.1p (3 bits)
Octet 4
VLAN ID (12 bits)

# Fig. 23

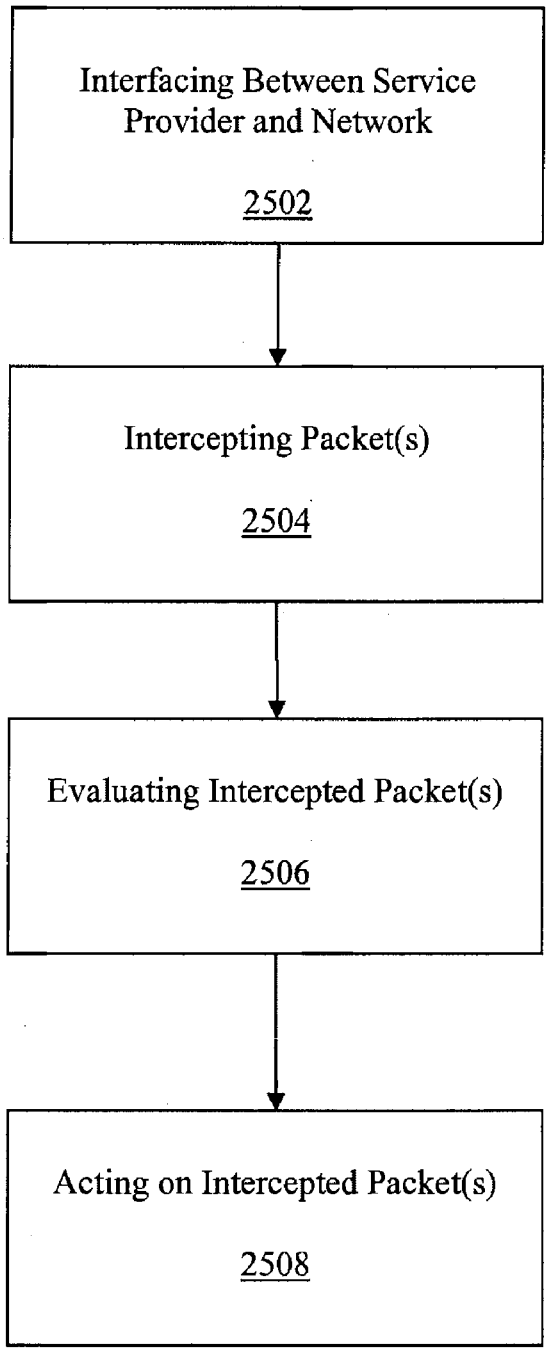
Interfacing Between Service Provider and Network
2502
Intercepting Packet(s)
2504
Evaluating Intercepted Packet(s)
2506
Acting on Intercepted Packet(s)
2508

# TRANSPARENT PROVISIONING OF SERVICES OVER A NETWORK

## RELATED APPLICATIONS

**[0001]** This application is a continuation-in-part under 37 C.F.R. § 1.53(b) of U.S. patent application Ser. No. 11/189,172, filed Jul. 25, 2005 now U.S. Pat. No. _____ (Attorney Ref. No. 10736/25), the entire disclosure of which is hereby incorporated by reference, which is a continuation under 37 C.F.R. § 1.53(b) of U.S. patent application Ser. No. 09/858,309, filed May 15, 2001 now U.S. Pat. No. 7,032,031 (Attorney Ref. No. 10736/6), the entire disclosure of which is hereby incorporated by reference, which claims priority as a continuation-in-part under 37 C.F.R. § 1.53(b) of U.S. patent application Ser. No. 09/602,129, filed Jun. 23, 2000 now U.S. Pat. No. 6,829,654 (Attorney Ref. No. 10736/4), the entire disclosure of which is hereby incorporated by reference.

## BACKGROUND

**[0002]** The Internet is growing by leaps and bounds. Everyday, more and more users log on to the Internet for the first time and these, and existing users are finding more and more content being made available to them. The Internet has become a universal medium for communications, commerce and information gathering.

**[0003]** Unfortunately, the growing user base along with the growing content provider base is causing ever increasing congestion and strain on the Internet infrastructure, the network hardware and software plus the communications links that link it all together. While the acronym "WWW" is defined as "World Wide Web", many users of the Internet have come to refer to it as the "World Wide Wait."

**[0004]** These problems are not limited to the Internet either. Many companies provide internal networks, known as intranets, which are essentially private Internets for use by their employees. These intranets can become overloaded as well. Especially, when a company's intranet also provides connectivity to the Internet. In this situation, the intranet is not only carrying internally generated traffic but also Internet traffic generated by the employees.

**[0005]** The growth of the Internet has also resulted in more and more malicious programmer activity. These "hackers" spread virus programs or attempt to hack into Web sites in order to steal valuable information such as credit card numbers. Further, there have been an increasing number of "Denial of Service" attacks where a hacker infiltrates multiple innocent computers connected to the Internet and coordinates them, without their owners' knowledge, to bombard a particular Web site with an immense volume of traffic. This flood of traffic overwhelms the target's servers and literally shuts the Web site down.

**[0006]** Accordingly, there is a need for an enhanced Internet infrastructure to more efficiently deliver content from providers to users and provide additional network throughput, reliability, security and fault tolerance.

## BRIEF DESCRIPTION OF THE DRAWINGS

**[0007]** FIG. **1** depicts an exemplary network for use with the disclosed embodiments.

**[0008]** FIG. **2** depicts the operations of the Domain Name System of the exemplary network of FIG. **1**.

**[0009]** FIG. **3** depicts an exemplary content delivery system for use with the exemplary network of FIG. **1**.

**[0010]** FIG. **4** depicts a content delivery system for use with the network of FIG. **1** according to a first embodiment.

**[0011]** FIG. **4**A depicts a block diagram of the content delivery system of FIG. **4**.

**[0012]** FIG. **5** depicts a content delivery system for use with the network of FIG. **1** according to a second embodiment.

**[0013]** FIG. **5**A depicts a block diagram of the content delivery system of FIG. **5**.

**[0014]** FIG. **6** depicts a content delivery system for use with the network of FIG. **1** according to a third embodiment.

**[0015]** FIG. **6**A depicts a block diagram of the content delivery system of FIG. **6**.

**[0016]** FIG. **7** depicts an edge adapter and packet interceptor according a fourth embodiment.

**[0017]** FIG. **8** depicts a block diagram of the packet analyzer/adapter of FIG. **7**.

**[0018]** FIG. **9** depicts a block diagram of a packet interceptor/analyzer according to a fifth embodiment.

**[0019]** FIGS. **10** and **11** depict the logical and physical implementation of a deep packet processing module according to one embodiment.

**[0020]** FIGS. **12** and **13** depict a logical architecture of an exemplary traffic control system according to one embodiment.

**[0021]** FIG. **14** depicts a representation of one embodiment of a packet analyzer/adapter implemented for use with a blade enclosure.

**[0022]** FIG. **15** depicts another representation of a blade implementation of the packet analyzer/adapter according to one embodiment.

**[0023]** FIG. **16** depicts another representation of a blade implementation of the packet analyzer/adapter according to one embodiment.

**[0024]** FIG. **17** depicts another representation of a blade implementation of the packet analyzer/adapter according to one embodiment.

**[0025]** FIG. **18** depicts a logical representation of an IPv6 packet header for use with the disclosed embodiments.

**[0026]** FIG. **19** depicts how the labels can be added to and removed from packets by routers as they flow through a network.

**[0027]** FIG. **20** depicts a dual packet analyzer/adapter configuration according to one embodiment.

**[0028]** FIG. **21** depicts another alternate implementation of a dual packet analyzer/adapter configuration according to one embodiment.

**[0029]** FIG. **22** depicts an exemplary untagged Ethernet frame.

**[0030]** FIG. **23** depicts a flow chart showing exemplary operation of one embodiment.

## DETAILED DESCRIPTION OF THE PRESENTLY PREFERRED EMBODIMENTS

**[0031]** FIG. **1** shows an exemplary network **100** for use with the disclosed embodiments. In one embodiment, the network **100** is a publicly accessible network, and in particular, the Internet. While, for the purposes of this disclosure, the disclosed embodiments will be described in relation to the Internet, one of ordinary skill in the art will appreciate that the disclosed embodiments are not limited to the Internet and are

applicable to other types of public networks as well as private networks, and combinations thereof, and all such networks are contemplated.

I. Introduction

**[0032]** As an introduction, a network interconnects one or more computers so that they may communicate with one another, whether they are in the same room or building (such as a Local Area Network or LAN) or across the country from each other (such as a Wide Area Network or WAN). A network is a series of points or nodes **126** interconnected by communications paths **128**. Networks can interconnect with other networks and can contain sub-networks. A node **126** is a connection point, either a redistribution point or an end point, for data transmissions generated between the computers which are connected to the network. In general, a node **126** has a programmed or engineered capability to recognize and process or forward transmissions to other nodes **126**. The nodes **126** can be computer workstations, servers, bridges or other devices but typically, these nodes **126** are routers or switches.

**[0033]** A router is a device or, in some cases, software in a computer, that determines the next network node **126** to which a piece of data (also referred to as a "packet" in the Internet context) should be forwarded toward its destination. The router is connected to at least two networks or sub-networks and decides which way to send each information packet based on its current understanding of the state of the networks to which it is connected. A router is located at any juncture of two networks, sub-networks or gateways, including each Internet point-of-presence (described in more detail below). A router is often included as part of a network switch. A router typically creates or maintains a table of the available routes and their conditions and uses this information along with distance and cost algorithms to determine the best route for a given packet. Typically, a packet may travel through a number of network points, each containing additional routers, before arriving at its destination.

**[0034]** The communications paths **128** of a network **100**, such as the Internet, can be coaxial cable, fiber optic cable, telephone cable, leased telephone lines such as T1 lines, satellite links, microwave links or other communications technology as is known in the art. The hardware and software which allows the network to function is known as the "infrastructure." A network **100** can also be characterized by the type of data it carries (voice, data, or both) or by the network protocol used to facilitate communications over the network's **100** physical infrastructure.

**[0035]** The Internet, in particular, is a publicly accessible worldwide network **100** which primarily uses the Transport Control Protocol and Internet Protocol ("TCP/IP") to permit the exchange of information. At a higher level, the Internet supports several applications protocols including the Hypertext Transfer Protocol ("HTTP") for facilitating the exchange of HTML/World Wide Web ("WWW") content, File Transfer Protocol ("FTP") for the exchange of data files, electronic mail exchange protocols, Telnet for remote computer access and Usenet ("NNTP" or Network News Transfer Protocol) for the collaborative sharing and distribution of information. It will be appreciated that the disclosed embodiments are applicable to many different applications protocols both now and later developed.

**[0036]** Logically, the Internet can be thought of as a web of intermediate network nodes **126** and communications paths **128** interconnecting those network nodes **126** which provide multiple data transmission routes from any given point to any other given point on the network **100** (i.e. between any two computers connected to the network **100**). Physically, the Internet can also be thought of as a collection of interconnected sub-networks wherein each sub-network contains a portion of the intermediate network nodes **126** and communications paths **128**. The division of the Internet into sub-networks is typically geographically based, but can also be based on other factors such as resource limitations and resource demands. For example, a particular city may be serviced by one or more Internet sub-networks provided and maintained by competing Internet Service Providers ("ISPs") (discussed in more detail below) to support the service and bandwidth demands of the residents.

**[0037]** Contrasting the Internet with an intranet, an intranet is a private network contained within an enterprise, such as a corporation, which uses the TCP/IP and other Internet protocols, such as the World Wide Web, to facilitate communications and enhance the business concern. An intranet may contain its own Domain Name Server ("DNS") and may be connected to the Internet via a gateway, i.e., an intra-network connection, or gateway in combination with a proxy server or firewall, as are known in the art.

**[0038]** Referring back to FIG. **1**, clients **102**, **104**, **106** and servers **108**, **110**, **112** are shown coupled with the network **100**. Herein, the phrase "coupled with" is defined to mean directly connected to or indirectly connected with, through one or more intermediate components. Such intermediate components may include both hardware and software based components. The network **100** facilitates communications and interaction between one or more of the clients **102**, **104**, **106** and one or more of the servers **108**, **110**, **112** (described in more detail below). Alternatively, the network **100** also facilitates communications and interaction among one or more of the clients **102**, **104**, **106**, e.g. between one client **102**, **104**, **106** and another client **102**, **104**, **106** or among one or more of the servers **108**, **110**, **112**, e.g. between one server **108**, **110**, **112** and another server **108**, **110**, **112**.

**[0039]** A client **102**, **104**, **106** may include a personal computer workstation, mobile or otherwise, wireless device such as a personal digital assistant or cellular telephone, an enterprise scale computing platform such as a mainframe computer or server or may include an entire intranet or other private network which is coupled with the network **100**. Typically, a client **102**, **104**, **106** initiates data interchanges with other computers, such as servers **108**, **110**, **112** coupled with the network **100**. These data interchanges most often involve the client requesting data or content from the other computer and the other computer providing that data or content in response to the request. Alternatively, the other computer coupled with the network can "push" data or content to the client **102**, **104**, **106** without it first being requested. For example, an electronic mail server **108**, **110**, **112** may automatically push newly received electronic mail over the network **100** to the client **102**, **104**, **106** as the new electronic mail arrives, alleviating the client **102**, **104**, **106** from first requesting that new mail be sent. It will be apparent to one of ordinary skill in the art that there can be many clients **102**, **104**, **106** coupled with the network **100**.

**[0040]** A server **108**, **110**, **112** may include a personal computer workstation, an enterprise scale computing platform or other computer system as are known in the art. A server **108**, **110**, **112** typically responds to requests from clients **102**, **104**,

**106** over the network **100**. In response to the request, the server **108**, **110**, **112** provides the requested data or content to the client **102**, **104**, **106** which may or may not require some sort of processing by the server **108**, **110**, **112** or another computer to produce the requested response. It will be apparent to one of ordinary skill in the art that a client **102**, **104**, **106** may also be a server **108**, **110**, **112** and vice versa depending upon the nature of the data interchange taking place, e.g. peer-to-peer architectures. For purposes of this disclosure, during any given communication exchange, a client **102**, **104**, **106** requests or receives content and is separate from the server **108**, **110**, **112** which provides the content (whether requested or not, i.e. pushed). Servers **108**, **110**, **112** may be World Wide Web servers serving Web pages and/or Web content to the clients **102**, **104**, **106** (described in more detail below). It will be apparent to one of ordinary skill in the art that there can be many servers **108**, **110**, **112** coupled with the network **100**.

**[0041]** Clients **102**, **104**, **106** are each coupled with the network **100** at a point of presence ("POP") **114**, **116**. The POP **114**, **116** is the connecting point which separates the client **102**, **104**, **106** from the network **100**. In a public network **100**, such as the Internet, the POP **114**, **116** is the logical (and possibly physical) point where the public network **100** ends, after which comes the private (leased or owned) hardware or private (leased or owned) network of the client **102**, **104**, **106**. A POP **114**, **116** is typically provided by a service provider **118**, **120**, such as an Internet Service Provider ("ISP") **118**, **120**, which provides connectivity to the network **100** on a fee for service basis. A POP **114**, **116** may actually reside in rented space owned by telecommunications carrier such as AT&T or Sprint to which the ISP **118**, **120** is connected. A POP **114**, **116** may be coupled with routers, digital/analog call aggregators, servers **108**, **110**, **112**, and frequently frame relay or ATM switches. As will be discussed below, a POP **114**, **116** may also contain cache servers and other content delivery devices.

**[0042]** A typical ISP **118**, **120** may provide multiple POP's **114**, **116** to simultaneously support many different clients **102**, **104**, **106** connecting with the network **100** at any given time. A POP **114**, **116** is typically implemented as a piece of hardware such as a modem or router but may also include software and/or other hardware such as computer hardware to couple the client **102**, **104**, **106** with the network **100** both physically/electrically and logically (as will be discussed below). The client **102**, **104**, **106** connects to the POP **114**,**116** over a telephone line or other transient or dedicated connection. For example, where a client **102**, **104**, **106** is a personal computer workstation with a modem, the ISP **118**, **120** provides a modem as the POP **114**, **116** to which the client **102**, **104**, **106** can dial in and connect to via a standard telephone line. Where the client **102**, **104**, **106** is a private intranet, the POP **114**, **116** may include a gateway router which is connected to an internal gateway router within the client **102**, **104**, **106** by a high speed dedicated communication link such as T1 line or a fiber optic cable.

**[0043]** A service provider **118**, **120** will generally provide POP's **114**, **116** which are geographically proximate to the clients **102**, **104**, **106** being serviced. For dial up clients **102**, **104**, **106**, this means that the telephone calls can be local calls. For any client **102**, **104**, **106**, a POP which is geographically proximate typically results in a faster and more reliable connection with the network **100**. Servers **108**, **110**, **112** are also connected to the network **100** by POP's **114**, **116**. These POP's **114**, **116** typically provide a dedicated, higher capacity and more reliable connection to facilitate the data transfer and availability needs of the server **108**, **110**, **112**. Where a client **102**, **104**, **106** is a wireless device, the service provider **118**, **120** may provide many geographically dispersed POP's **114**, **116** to facilitate connecting with the network **100** from wherever the client **102**, **104**, **106** may roam or alternatively have agreements with other service providers **118**, **120** to allow access by each other's customers. Each service provider **118**, **120**, along with its POP's **114**, **116** and the clients **102**, **104**, **106** effectively forms a sub-network of the network **100**.

**[0044]** Note that there may be other service providers **118**, **120** "upstream" which provide network **100** connectivity to the service providers **118**, **120** which provide the POP's **114**, **116**. Each upstream service provider **118**, **120** along with its downstream service providers **118**, **120** again forms a sub-network of the network **100**. Peering is the term used to describe the arrangement of traffic exchange between Internet service providers (ISPs) **118**, **120**. Generally, peering is the agreement to interconnect and exchange routing information. More specifically, larger ISP's **118**, **120** with their own backbone networks (high speed, high capacity network connections which interconnect sub-networks located in disparate geographic regions) agree to allow traffic from other large ISP's **118**, **120** in exchange for traffic on their backbones. They also exchange traffic with smaller service providers **118**, **120** so that they can reach regional end points where the POP's **114**, **116** are located. Essentially, this is how a number of individual sub-network owners compose the Internet. To do this, network owners and service providers **118**, **120**, work out agreements to carry each other's network traffic. Peering requires the exchange and updating of router information between the peered ISP's **118**, **120**, typically using the Border Gateway Protocol (BGP). Peering parties interconnect at network focal points such as the network access points (NAPs) in the United States and at regional switching points. Private peering is peering between parties that are bypassing part of the publicly accessible backbone network through which most Internet traffic passes. In a regional area, some service providers **118**, **120** have local peering arrangements instead of, or in addition to, peering with a backbone service provider **118**, **120**.

**[0045]** A network access point (NAP) is one of several major Internet interconnection points that serve to tie all of the service providers **118**, **120** together so that, for example, an AT&T user in Portland, Oreg. can reach the Web site of a Bell South customer in Miami, Fla. The NAPs provide major switching facilities that serve the public in general. Service providers **118**, **120** apply to use the NAP facilities and make their own inter-company peering arrangements. Much Internet traffic is handled without involving NAPs, using peering arrangements and interconnections within geographic regions.

**[0046]** For purposes of later discussions, the network **100** can be further logically described to comprise a core **122** and an edge **124**. The core **122** of the network **100** includes the servers **108**, **110**, **112** and the bulk of the network **100** infrastructure, as described above, including larger upstream service providers **118**, **120**, and backbone communications links, etc. Effectively, the core **122** includes everything within the network **100** up to the POP's **114**, **116**. The POP's **114**, **116** and their associated hardware lie at the edge **124** of the network **100**. The edge **124** of the network **100** is the point where clients **102**, **104**, **106**, whether single devices, com-

puter workstations or entire corporate internal networks, couple with the network **100**. As defined herein, the edge **124** of the network **100** may include additional hardware and software such as Domain Name Servers, cache servers, proxy servers and reverse proxy servers as will be described in more detail below. Typically, as the network **100** spreads out from the core **122** to the edge **124**, the total available bandwidth of the network **100** is diluted over more and more lower cost and lower bandwidth communications paths. At the core **122**, bandwidth over the higher capacity backbone interconnections tends to be more costly than bandwidth at the edge **124** of the network **100**. As with all economies of scale, high bandwidth interconnections are more difficult to implement and therefore rarer and more expensive than low bandwidth connections. It will be appreciated, that even as technology progresses, newer and higher bandwidth technologies will remain more costly than lower bandwidth technologies.

## II. The World Wide Web

**[0047]** As was discussed above, clients **102**, **104**, **106** engage in data interchanges with servers **108**, **110**, **112**. On the Internet, these data exchanges typically involve the World Wide Web ("WWW"). Relative to the TCP/IP suite of protocols (which are the basis for information exchange on the Internet), HTTP is an application protocol. A technical definition of the World Wide Web is all the resources and users on the Internet that are using the Hypertext Transfer Protocol ("HTTP"). HTTP is the set of rules for exchanging data in the form of files (text, graphic images, audio, video, and other multimedia files, such as streaming media and instant messaging), also known as Web content, between clients **102**, **104**, **106** and servers **108**, **110**, **112**. Servers **108**, **110**, **112** which serve Web content are also known as Web servers **108**, **110**, **112**.

**[0048]** Essential concepts that are part of HTTP include (as its name implies) the idea that files/content can contain references to other files/content whose selection will elicit additional transfer requests. Any Web server **108**, **110**, **112** contains, in addition to the files it can serve, an HTTP daemon, a program that is designed to wait for HTTP requests and handle them when they arrive. A personal computer Web browser program, such as Microsoft™ Internet Explorer, is an HTTP client program (a program which runs on the client **102**, **104**, **106**), sending requests to Web servers **108**, **110**, **112**. When the browser user enters file requests by either "opening" a Web file (typing in a Uniform Resource Locator or URL) or clicking on a hypertext link, the browser builds an HTTP request and sends it to the Web server **108**, **110**, **112** indicated by the URL. The HTTP daemon in the destination server **108**, **110**, **112** receives the request and, after any necessary processing, returns the requested file to the client **102**, **104**, **106**.

**[0049]** The Web content which a Web server typically serves is in the form of Web pages which consist primarily of Hypertext Markup Language. Hypertext Markup Language ("HTML") is the set of "markup" symbols or codes inserted in a file usually containing text intended for display on a World Wide Web browser. The markup tells the Web browser how to display a Web page's content for the user. The individual markup codes are referred to as elements or tags. Web pages can further include references to other files which are stored separately from the HTML code, such as image or other multimedia files to be presented in conjunction with the text Web content.

**[0050]** A Web site is a related collection of Web files/pages that includes a beginning HTML file called a home page. A company or an individual tells someone how to get to their Web site by giving that person the address or domain name of their home page (the addressing scheme of the Internet and the TCP/IP protocol is described in more detail below). From the home page, links are typically provided, either directly or through intermediate pages, to all the other pages (HTML files) located on their site. For example, the Web site for IBM™ has the home page address of http://www.ibm.com. Alternatively, the home page address may include a specific file name like index.html but, as in IBM's case, when a standard default name is set up, users don't have to enter the file name. IBM's home page address leads to thousands of pages, but a Web site may also consist of just a few pages.

**[0051]** Since site implies a geographic place, a Web site can be confused with a Web server **108**, **110**, **112**. As was discussed above, a server **108**, **110**, **112** is a computer that holds and serves the HTML files, images and other data for one or more Web sites. A very large Web site may be spread over a number of servers **108**, **110**, **112** in different geographic locations or one server **108**, **110**, **112** may support many Web sites. For example, a Web hosting company may provide server **108**, **110**, **112** facilities to a number of Web sites for a fee. Web sites can also contain links to pages or files on other Web sites.

## III. The Domain Name System

**[0052]** As was described above, the network **100** facilitates communications between clients **102**, **104**, **106** and servers **108**, **110**, **112**. More specifically, the network **100** facilitates the transmission of HTTP requests from a client **102**, **104**, **106** to a server **108**, **110**, **112** and the transmission of the server's **108**, **110**, **112**, response to that request, the requested content, back to the client **102**, **104**, **106**. In order to accomplish this, each device coupled with the network **100**, whether it be a client **102**, **104**, **106** or a server **108**, **110**, **112** must provide a unique identifier so that communications can be routed to the correct destination. On the Internet, these unique identifiers comprise domain names (which generally will include World Wide Web Uniform Resource Locators or "URL's") and Internet Protocol addresses or "IP" addresses. Every client **102**, **104**, **106** and every server **108**, **110**, **112** must have a unique IP address so that the network **100** can reliably route communications to it. Additionally, clients **102**, **104**, **106** and servers **108**, **110**, **112** can be coupled with proxy servers (forward, reverse or transparent), discussed in more detail below, which allow multiple clients **102**, **104**, **106** or multiple servers **108**, **110**, **112** to be associated with a single domain name or a single IP address. In addition, a particular server **108**, **110**, **112** may be associated with multiple domain names and/or IP addresses for more efficient handling of requests or to handle multiple content providers, e.g. multiple Web sites, on the same server **108**, **110**, **112**. Further, as was discussed above, since a POP **114**, **116** provides the connecting point for any particular client **102**, **104**, **106** to connect to the network **100**, it is often satisfactory to provide each POP **114**, **116** with a single unique domain name and IP address since the POP **114**, **116** will reliably deliver any communications received by it to its connected client **102**, **104**, **106**. Where the client **102**, **104**, **106** is a private network, it may have its own internal hardware, software and addressing scheme (which may also include domain names and IP addresses) to reliably deliver

data received from the POP **114**, **116** to the ultimate destination within the private network client **102**, **104**, **106**.

**[0053]** As was discussed, the Internet is a collection of interconnected sub-networks whose users communicate with each other. Each communication carries the address of the source and destination sub-networks and the particular machine within the sub-network associated with the user or host computer at each end. This address is called the IP address (Internet Protocol address). In the current implementation of the Internet, the IP address is a 32 bit binary number divided into four 8 bit octets. This 32-bit IP address has two parts: one part identifies the source or destination sub-network (with the network number) and the other part identifies the specific machine or host within the source or destination sub-network (with the host number). An organization can use some of the bits in the machine or host part of the address to identify a specific sub-network within the sub-network. Effectively, the IP address then contains three parts: the sub-network number, an additional sub-network number, and the machine number.

**[0054]** One problem with IP addresses is that they have very little meaning to ordinary users/human beings. In order to provide an easier to use, more user friendly network **100**, a symbolic addressing scheme operates in parallel with the IP addressing scheme. Under this symbolic addressing scheme, each client **102**, **104**, **106** and server **108**, **110**, **112** is also given a "domain name" and further, individual resources, content or data are given a Uniform Resource Locator ("URL") based on the domain name of the server **108**, **110**, **112** on which it is stored. Domain names and URL's are human comprehensible text and/or numeric strings which have symbolic meaning to the user. For example, a company may have a domain name for its servers **108**, **110**, **112** which is the company name, i.e., IBM Corporation's domain name is ibm.com. The portion of the domain name immediately following the period or "dot" is used to identify the type of organization to which the domain name belongs. These are called "top-level" domain names and include com, edu, org, mil, gov, etc. Com indicates a corporate entity, edu indicates an educational institution, mil indicates a military entity, and gov indicates a government entity. It will be apparent to one of ordinary skill in the art that the text strings which make up domain names may be arbitrary and that they are designed to have relevant symbolic meaning to the users of the network **100**. A URL typically includes the domain name of the provider of the identified resource, an indicator of the type of resource and an identifier of the resource itself. For example, for the URL "http://www.ibm.com/index.html", http identifies this resource as a hypertext transfer protocol compatible resource, www.ibm.com is the domain name (again, the www is arbitrary and typically is added to indicate to a user that the server **108**, **110**, **112**, associated with this domain name is a world wide Web server), and index.html identifies a hypertext markup language file named "index.html" which is stored on the identified server **108**, **110**, **112**.

**[0055]** Domain names make the network **100** easier for human beings to utilize it, however the network infrastructure ultimately uses IP addresses, and not domain names, to route data to the correct destination. Therefore, a translation system is provided by the network **100** to translate the symbolic human comprehensible domain names into IP addresses which can then be used to route the communications. The Domain Name System ("DNS") is the way that Internet domain names are located and translated into IP addresses. The DNS is a distributed translation system of address translators whose primary function is to translate domain names into IP addresses and vice versa. Due to the ever expanding number of potential clients **102**, **104**, **106** and servers **108**, **110**, **112** coupled with the network **100** (currently numbering in the millions), maintaining a single central list of domain name/IP address correspondences would be impractical. Therefore, the lists of domain names and corresponding IP addresses are distributed throughout the Internet in a hierarchy of authority. A DNS server, typically located within close geographic proximity to a service provider **118**, **120** (and likely provided by that service provider **118**, **120**), handles requests to translate the domain names serviced by that service provider **118**, **120** or forwards those requests to other DNS servers coupled with the Internet for translation.

**[0056]** DNS translations (also known as "lookups" or "resolutions") can be forward or reverse. Forward DNS translation uses an Internet domain name to find an IP address. Reverse DNS translation uses an Internet IP address to find a domain name. When a user enters the address or URL for a Web site or other resource into their browser program, the address is transmitted to a nearby router which does a forward DNS translation in a routing table to locate the IP address. Forward DNS translations are the more common translation since most users think in terms of domain names rather than IP addresses. However, occasionally a user may see a Web page with a URL in which the domain name part is expressed as an IP address (sometimes called a dot address) and wants to be able to see its domain name, to for example, attempt to figure out the identity of who is providing the particular resource. To accomplish this, the user would perform a reverse DNS translation.

**[0057]** The DNS translation servers provided on the Internet form a hierarchy through which any domain name can be "resolved" into an IP address. If a particular DNS translation server does not "know" the corresponding IP address of a given domain name, it "knows" other DNS translation servers it can "ask" to get that translation. This hierarchy includes "top-level" DNS translation servers which "know" which resources (clients **102**, **104**, **106** or servers **108**, **110**, **112**) have a particular top level domain identifier, i.e. com, gov, edu, etc. as described above. This hierarchy further continues all the way up to the actual resource (client **102**, **104**, **106** or server **108**, **110**, **112**) which is typically affiliated with a DNS translation server which "knows" about it and its IP address. A particular DNS translation server "knows" of a translation when it exists in its table of translations and has not expired. Any particular translation will typically be associated with a Time to Live ("TTL") which specifies a duration, time or date after which the translation expires. As discussed, for a given translation, if a DNS translation server does not know the translation, because it is not in its routing table or it has expired, that DNS translation server will have to inquire up the hierarchical chain of DNS translation servers in order to make the translation. In this way, new domain name and IP address translations can be propagated through the DNS translation server hierarchy as new resources are added and old resources are assigned new addresses.

**[0058]** Referring now to FIG. **2**, there is shown a diagram illustrating the basic operation of the Domain Name System **200**. Depicted in the figure are clients **102**, **104**, **106**, labeled "Client **1**", "Client **2**" and "Client **3**." Clients **1** and **2** are coupled with POP's **114** provided by service provider **120**, labeled "POP**1**A" and "POP**1**B." Client **3** is coupled with a

POP (not shown) provided by service provider **118**, labeled "POP**2**." In addition, service providers **118**, **120** may provide additional POP's **114** for other clients **102**, **104**, **106** as described above. Service provider **120** is shown further coupled with service provider **118**, a server **108**, labeled "Server **1**", which may be a Web server and or an entire Web site which may comprise multiple sub-servers (not shown) as discussed above, and a top-level DNS translation server **202**, labeled "DNS Top", all via the network **100** which may be the Internet. Furthermore, service provider **120** further includes a DNS translation server **204**, labeled "DNS A" and routing and interconnection hardware **206**, as described above, to electrically and logically couple the POP's **114** with the network **100**. Optionally, the service provider **120** may also include a cache server **208** or proxy server (not shown) to enhance content delivery as described below.

**[0059]** In order for a client **102**, **104**, **106** to generate a request for content to a particular server **108**, the client **102**, **104**, **106** first determines the IP address of the server **108** so that it can properly address its request. Referring to Client **1 102**, an exemplary DNS translation transaction where the client **102**, **104**, **106** is a single workstation computer is depicted. A user of Client **1** enters a URL or domain name of the Server **1 108** and specific resource contained within Server **1**, such as a sub-server, into their browser program in order to make a request for content. The browser program typically handles negotiating the DNS translation transaction and typically has been pre-programmed ("bound") with the IP address of a particular DNS translation server to go to first in order to translate a given domain name. Typically, this bound DNS translation server will be DNS A **204** provided by the service provider **120**. Alternatively, where the client **102**, **104**, **106** is not bound to a particular DNS translation server, the service provider **120** can automatically route translation requests received by its POP's **114** to its DNS translation server, DNS A **202**. The process by which a domain name is translated is often referred to as the "slow start" DNS translation protocol. This is in contrast to what is known as the "slow start HTTP" protocol which will be discussed below in more detail in relation to content delivery.

**[0060]** Client **1 102** then sends its translation request, labeled as "A**1**", to its POP **114**, POP**1**A. The request, A**1**, is addressed with a return address of Client **1** and with the IP address of the bound DNS A **204** therefore the service provider's **120** routing equipment **206** automatically routes the request to DNS A **204**, labeled as "B." Assuming DNS A **204** does not know how to translate the given domain name in the request or the translation in its routing table has expired, it must go up the DNS hierarchy to complete the translation. DNS A **204** will then forward a request, labeled "C", upstream to the top-level DNS translation server **202** associated with the top-level domain in the domain address, i.e. com, gov, edu etc. DNS A **204** has been pre-programmed with the IP addresses of the various hierarchical servers that it may need to talk to in order to complete a translation. DNS A **204** addresses request C with the IP address of the top-level DNS server **202** and also includes its own return address. DNA then transmits the request over the network **100** which routes the request to the top level DNS server **202**. The top-level DNS server **202** will then translate and return the IP address corresponding to Server **1 108** back to DNS A **204** via the network **100**, labeled "D."

**[0061]** As was discussed above, a particular domain name may be associated with multiple IP addresses of multiple sub-servers **108**, **110**, **112**, as in the case of a Web site which, due to its size, must be stored across multiple sub-servers **108**, **110**, **112**. Therefore, in order to identify the exact sub-server which can satisfy the request of the Client **1 102**, DNS A **204** must further translate the domain address into the specific sub-server **108**. In order to accomplish this, Server **1 108** provides its own DNS translation server **210** which knows about the various sub-servers and other resources contained within Server **1 108**. DNS A **204**, now knowing the IP address of Server **1 108**, e.g. the Web site generally, can create a request, labeled "E", to translate the domain name/URL provided by Client **1 102** into the exact sub-server/resource on Server **1 108**. DNS B **210** returns the translation, labeled "F", to DNS A **204** which then returns it to Client **1 102** via the service provider's routing equipment **206**, labeled "G", which routes the response through POP**1**A **114** to the Client **1**, labeled "H**1**." Client **1 102** now has the IP address it needs to formulate its content requests to Server **1 108**.

**[0062]** FIG. **2**, further depicts an exemplary DNS translation transaction wherein the client **102**, **104**, **106** is a private network such as an intranet. For example, client **2 104** may comprise its own network of computer systems. Further more, client **2 104** may provide its own DNS translation server (not shown) to handle internal routing of data as well as the routing of data over the network **100** generally for the computer systems coupled with this private network. In this case, the internal DNS translation server will either be programmed to send its unknown translations to DNS A (labeled as "A**2**", "B", "C", "D", "E", "F", "G", "H**2**") or may be programmed to use the DNS hierarchy itself, i.e. communicate directly with the upstream DNS Top **202** and DNS B **210** (labeled as "A**2**", "B**2**", "C**2**", "D**2**", "E**2**", "F**2**", "G**2**", "H**2**"). In these cases, the internal DNS translation server simply adds another layer to the DNS hierarchy as a whole, but the system continues to function similarly as described above.

**[0063]** In addition, FIG. **2**, further depicts an exemplary DNS translation transaction wherein the client **102**, **104**, **106** is coupled with a POP **114** that is not associated with its bound DNS translation server **204**. For example, Client **3 106** is depicted as being coupled with POP**2** provided by service provider **118**. In the exemplary situation, Client **3 106** is bound with DNS A **204** provided by service provider **120**. This situation can occur in the wireless environment, where a particular wireless client **102**, **104**, **106** couples with whatever POP **114**, **116** is available in its geographic proximity (e.g. when roaming) and is affiliated, e.g. has access sharing agreements, with the service provider **120** who generally provides connectivity services for the client **102**, **104**, **106**. In this case, client **3 106** will perform its translation requests as described above, and will address these requests to its bound DNS Server, in this case DNS A **204**. The service provider **118** will see the address of the DNS A **204** in client **3**'s **106** translation requests and appropriately route the translation request over the network **100** to service provider **120** and ultimately on to DNS A **204**. DNS A **204** will appropriately handle the request and return it via the network **100** accordingly (labeled as "A**3**", "B", "C", "D", "E", "F", "G", "H**3**").

**[0064]** It will be appreciated that in each of the examples given above, if a particular DNS translation server already "knows" the requested translation, the DNS translation server does not have to go up the hierarchy and can immediately return the translation to the requester, either the client **102**, **104**, **106** or downstream DNS translation server.

**[0065]** It should be noted, that because a given server **108**, **110**, **112** may comprise multiple IP addresses, the DNS translation servers may be programmed to return a list of IP addresses in response to a given domain name translation request. Typically, this list will be ordered from the most optimal IP address to the least optimal IP address. The browser program can then pick one of the IP addresses to send content requests to and automatically switch to another IP address should the first requests fail to reach the destination server **108**, **110**, **112** due to a hardware failure or network **100** congestion. It will further be appreciated that the operations and structure of the existing DNS system are known to those of ordinary skill in the art.

IV. Content Delivery

**[0066]** As mentioned above, once the DNS translation is complete, the client **102**, **104**, **106** can initiate its requests for content from the server **108**. Typically, the requests for content will be in the form of HTTP requests for Web content as described above. In order to alleviate server **108** overload, the HTTP protocol provides a "slow start" mechanism. As was described above, a Web page consists of HTML code plus images, multimedia or other separately stored content. Typically, the amount of HTML code contained within a Web page is very small compared to the amount of image and/or multimedia data. When a client requests a Web page from the server **108**, the server **108** must serve the HTML code and the associated image/multimedia data to the client **102**, **104**, **106**. However, the client **102**, **104**, **106**, upon receipt of the HTML code, may be unwilling or unable, for whatever reason, to receive the associated image/multimedia data. To prevent the server **108** from wasting processing and bandwidth resources unnecessarily by sending unwanted data, the HTTP slow start protocol forces the client **102**, **104**, **106** to first request the HTML code and then subsequent to receipt of that HTML code, request any associated separately stored content. In this way, if after the initial request, the client **102**, **104**, **106** disconnects or otherwise switches to making requests of another server **108**, the initial server **108** is not burdened with serving the unwanted or unnecessary content.

**[0067]** In addition, it important to note that clients **102**, **104**, **106** may be located very far from each other, either geographically or even logically in consideration of the network topology. For example, a client **102**, **104**, **106** may be located in Chicago, Ill. while the server **108** from which it is requesting content is located in Paris, France. Alternatively, client **102**, **104**, **106** may be located in the same city as server **108** but, due to the topology of the network **100**, there may be multiple nodes **126** and interconnecting communications paths **128** between the client **102**, **104**, **106** and the server **108** necessitating a lengthy route for any data transmitted between the two. Either scenario can significantly impact the response time of a server **108** to a given request from a client **102**, **104**, **106**. Adding in the fact that the network **100** may be servicing millions of clients **102**, **104**, **106** and servers **108** at any given time, the response time may be further impacted by reduced bandwidth and capacity caused by network congestion at the server **108** or at one or more intermediate network nodes **126**.

**[0068]** Servers **108** and service providers **118**, **120** may attempt to alleviate this problem by increasing the speed and bandwidth capacity of the network **100** interconnections. Further, servers **108** may attempt to alleviate slow request response times by providing multiple sub-servers which can handle the volume of requests received with minimal latency. These sub-servers can be provided behind a reverse proxy server which, as described above, is "tightly coupled" with the Web site and can route content requests directed to a single IP address, to any of the multiple sub-servers. This reduces the number of individual translations that have to be made available to the DNS translation system and kept up to date for all of the sub-servers. The reverse proxy server can also attempt to balance the load across multiple sub-servers by allocating incoming requests using, for example, a round-robin routine. Reverse proxy servers can further include a cache server as described below to further enhance the Server's **108** ability to handle a high volume of requests or the serving of large volumes of data in response to any given request. It will be appreciated that reverse proxy servers and load balancing techniques are generally known to those of ordinary skill in the art.

**[0069]** Clients **102**, **104**, **106** and service providers **118**, **120** (and, as described above, servers **108**) may attempt to alleviate this problem by including a cache or cache server **208**. A cache server **208** is a server computer (or alternatively implemented in software directly on the client **102**, **104**, **106** or another computer coupled with the client **102**, **104**, **106** such as at the POP **114**) located, both logically and geographically, relatively close to the client **102**, **104**, **106**. The cache server **208** saves/caches Web pages and other content that clients **102**, **104**, **106**, who share the cache server, have requested in the past. Successive requests for the same content can then be satisfied by the cache server **208** itself without the need to contact the source of the content. A cache server **208** reduces the latency of fulfilling requests and also reduces the load on the content source. Further, a cache server **208** at the edge **124** of the Internet reduces the consumption of bandwidth at the core **122** of the Internet where it is more expensive. The cache server **208** may be a part of a proxy server or may be provided by a service provider **118**, **120**.

**[0070]** Cache servers **208** invisibly intercept requests for content and attempt to provide the requested content from the cache (also known as a "hit"). Note that a cache server **208** is not necessarily invisible, especially when coupled with a proxy server. In this case, the client **102**, **104**, **106** may need to be specially programmed to communicate its content requests to the proxy server in order to utilize the cache server. Cache servers **208**, as referred to in this disclosure then, may include these visible cache servers as well as invisible cache servers which transparently intercept and attempt to service content requests. Where the requested content is not in the cache (also known as a "miss"), the cache forwards the request onto the content source. When the source responds to the request by sending the content to the client **102**, **104**, **106**, the cache server **208** saves a copy of the content in its cache for later requests. In the case where a cache server is part of a proxy server, the cache/proxy server makes the request to the source on behalf of the client **102**, **104**, **106**. The source then provides the content to the cache/proxy server which caches the content and also forwards the requested content to the client **102**, **104**, **106**. An exemplary software based cache server is provided by SQUID, a program that caches Web and other Internet content in a UNIX-based proxy server closer to the user than the content-originating site. SQUID is provided as open source software and can be used under the GNU license for free software, as is known in the art.

**[0071]** Caches operate on two principles, temporal locality and spatial locality. Temporal locality is a theory of cache operation which holds that data recently requested will most

likely be requested again. This theory dictates that a cache should store only the most recent data that has been requested and older data can be eliminated from the cache. Spatial Locality is a theory of cache operation which holds that data located near requested data (e.g. logically or sequentially) will be likely to be requested next. This theory dictates that a cache should fetch and store data in and around the requested data in addition to the requested data. In practice, this means that when a HTML Web page is requested, the cache should go ahead and request the separately stored content, i.e. begin the slow start process because more likely than not, the client **102**, **104**, **106** will request this data upon receipt of the HTML code.

**[0072]** While cache servers **208** alleviate some of the problems with net congestion and request response times, they do not provide a total solution. In particular, they do not provide a viable solution for dynamic content (content which continually changes, such as news, as opposed to static or fixed content). This type of content cannot be cached otherwise the requesting client **102**, **104**, **106** will receive stale data. Furthermore, cache servers **208** often cannot support the bandwidth and processing requirements of streaming media, such as video or audio, and must defer these content requests to the server **108** which are the source of the content. Cache servers **208**, in general, further lack the capability to service a large volume of requests from a large volume of clients **102**, **104**, **106** due to the immense capacity requirements. Typically, then general cache servers **208**, such as those provided by a service provider **118**, **120** will have high miss rates and low hit rates. This translates into a minimal impact on server **108** load, request response times and network **100** bandwidth. Moreover, as will be discussed below, by simply passing on requests which miss in the cache to the server **108** to handle, the server **108** is further subjected to increased security risks from the untrusted network **100** traffic which may comprise, for example, a denial of service attack or an attempt by a hacker to gain unauthorized access.

**[0073]** Referring now to FIG. **3**, there is depicted an enhanced content delivery system **300** which provides optimized caching of content from the server **108** to the client **102**, **104**, **106** utilizing the HTTP slow start protocol. The system **300** is typically provided as a pay-for service by a content delivery service to which particular servers **108** subscribe to in order to enhance requests made by clients **102**, **104**, **106** for their specific content. FIG. **3** depicts the identical DNS system of FIG. **2** but adds cache servers **302** and **304**, labeled "Cache C**1**" and "Cache C**2**" plus a special DNS translation server **306**, labeled "DNS C" affiliated with the content delivery service.

**[0074]** The depicted system **300** implements one known method of "Content Delivery." Content delivery is the service of copying the pages of a Web site to geographically dispersed cache servers **302**, **304** and, when a page is requested, dynamically identifying and serving the page from the closest cache server **302**, **304** to the requesting client **102**, **104**, **106**, enabling faster delivery. Typically, high-traffic Web site owners and service providers **118**, **120** subscribe to the services of the company that provides content delivery. A common content delivery approach involves the placement of cache servers **302**, **304** at major Internet access points around the world and the use of a special routing code embedded in the HTML Web pages that redirects a Web page request (technically, a Hypertext Transfer Protocol—HTTP—request) to the closest cache server **302**, **304**. When a client **102**, **104**, **106** requests the separately stored content of a Web site/server **108** that is "content-delivery enabled," the content delivery network redirects that client **102**, **104**, **106** to makes its request, not from the site's originating server **108**, but to a cache server **302**, **304** closer to the user. The cache server **302**, **304** determines what content in the request exists in the cache, serves that content to the requesting client **102**, **104**, **106**, and retrieves any non-cached content from the originating server **108**. Any new content is also cached locally. Other than faster loading times, the process is generally transparent to the user, except that the URL ultimately served back to the client **102**, **104**, **106** may be different than the one initially requested. Content delivery is similar to but more selective and dynamic than the simple copying or mirroring of a Web site to one or several geographically dispersed servers. It will further be appreciated that geographic dispersion of cache servers is generally known to those of ordinary skill in the art.

**[0075]** FIG. **3** further details a known method of re-directing the requests generated by the client **102**, **104**, **106** to a nearby cache server **302**, **304**. This method utilizes the HTTP slow start protocol described above. When a client **102**, **104**, **106** wishes to request content from a particular server **108**, it will obtain the IP address of the server **108**, as described above, using the normal DNS translation system. Once the server's **108** IP address is obtained, the client **102**, **104**, **106** will make its first request for the HTML code file which comprises the desired Web page. As given by the HTTP slow start protocol, the server **108** will serve the HTML code file to the client **102**, **104**, **106** and then wait for the client **102**, **104**, **106** to request the separately stored files, e.g., the image and multimedia files, etc. Normally, these requests are made in the same way that the initial content request was made, by reading each URL from the HTML code file which identifies the separately stored content and formulating a request for that URL. If the domain name for the URL of the separately stored content is the same as the domain name for the initially received HTML code file, then no further translations are necessary and the client **102**, **104**, **106** can immediately formulate a request for that separately stored content because it already has the IP address. However, if the URL of the separately stored content comprises a different domain name, then the client **102**, **104**, **106** must go through the DNS translation process again to translate the new domain name into an IP address and then formulate its requests with the appropriate IP address. The exemplary content delivery service takes advantage of this HTTP slow start protocol characteristic.

**[0076]** The exemplary content delivery service partners with the subscribing Web server **108** and modifies the URL's of the separately stored content within the HTML code file for the particular Web page. The modified URL's include data which will direct their translation requests to a specific DNS translation server **306**, DNS C provided by the content delivery service. DNS C is an intelligent translation server which attempts to figure out where the client **102**, **104**, **106** is geographically located and translate the URL to point to a cache server **302**, **304** which is geographically proximate to the client **102**, **104**, **106**. DNS C performs this analysis by knowing the IP address of the downstream DNS server **204**, DNS A which it assumes is located near the client **102**, **104**, **106**. By using this IP address and combining it with internal knowledge of the network **100** topology and assignment of IP addresses, DNS C **306** can determine the geographically optimal cache server **302**, **304** to serve the requested content to the client **102**, **104**, **106**.

**[0077]** An exemplary transaction is further depicted by FIG. **3**. In this exemplary transaction, Client **3 106** wishes to request content from Server **1 108**. Client **3 106** will establish the IP address of the source of the desired content using the standard DNS translation system described above, labeled "A**1**", "B", "C", "D", "E", "F", "G", "H**1**." Once Client **3 106** has the IP address of Server **1 108**, it will generate a request for the initial HTML code file of the desired Web page and Server **1 108** will respond with the data. Client **3 106** will then request a particular separately stored file associated with the Web page by reading the URL from the HTML code file and translating the domain name contained therein. As noted above, this URL comprises the domain name of the content delivery service as well as an identifier which identifies the content being requested (since the content delivery service typically handles many different servers **108**). Client **3 106** will generate another translation request to DNS A **204**, labeled "I**1**" and "J." DNS A **204** will attempt to translate the given domain name but will fail because the content delivery service has set all of its translations to have a TTL=0. Therefore, DNS A **204** will be required to contact DNS C **306** which is provided by the content delivery service, labeled "K" and "L." Note that DNS A **204** may be required to contact DNS top **202** in order to locate the IP address of DNS C **306**. DNS C **306** receives the translation request and knows the IP address of DNS A **204**, which was given as the return address for the translation. Using the IP address of DNS A **204**, DNS C **306** figures out which cache server **302**, **304** is geographically proximate to Client **3 106**, in this case, Cache C**2 304**. An appropriate IP address is then returned to by DNS C **306** to DNS A **204** and subsequently returned to Client **3 106**. Client **3 106** then formulates its request for the separately stored data but, unwittingly, uses the IP address of the cache server C**2 304**. Cache server C**2 304** receives the request and serves the desired content as described above.

**[0078]** FIG. **3** further illustrates a second exemplary transaction sequence which discloses a flaw in the depicted content delivery method. In this example, Client **1 102** wishes to request content from Server **1 108**. Client **1 102** is a wireless or mobile client which is coupled with service provide **118** at POP**2** but is bound to DNS A **204** provided by service provider **120**. In this example, all of the translation and request transactions occur as in the above example for Client **3 106**. The translation request to identify the IP address of the separately stored content will be handled by DNS A **204** which will then hand it off to DNS C **306** as described above. However, DNS C **306** will then attempt to identify a geographically proximate cache server **302**, **304** based on the IP address of DNS A **204** which is not located near Client **1 102** in this example. Therefore DNS C **306** will return a translation directing Client **1 102** to cache server C**2 304** when in fact, the optimal cache server would have been cache server C**1 302**. With more and more wireless and mobile user utilizing the Internet, mis-optimized re-direction of content delivery will happen more frequently. Furthermore, there may be cases where the Client **102**, **104**, **106** is dynamically bound to a DNS translator associated with whatever POP **114**, **116** they are connecting to. While this may appear to solve the problem, the content delivery service is still basing its redirection determination on an indirect indicator of the location of the client **102**, **104**, **106**. However, the IP address of the DNS translator may still fail to indicate the correct geographic location or the correct logical location (based on the topology of the network **100**) of the client **102**, **104**, **106** in relation to the DNS translator. A more accurate indicator of the client's **102**, **104**, **106** physical geographic location and/or network logical location is needed in order to make an accurate decision on which cache server **302**, **304** to redirect that client **102**, **104**, **106** to.

## V. The First Embodiment

**[0079]** Referring now to FIG. **4**, there is depicted a first embodiment of an enhanced DNS system to facilitate the operation of content delivery services by eliminating the dependency on the geographic location of the downstream DNS server. In addition to what is shown in FIG. **3**, the embodiment shown in FIG. **4** further adds an edge server **402** coupled with the routing equipment **206** and POP's **114** of an affiliated service provider **120** which may be located within the affiliated server provider's **120** facilities. In one alternative embodiment, the edge server **402** is integrated with a router. In another alternative embodiment, the edge server is integrated with a generally accessible DNS translation server such as DNS A**1 204**. The edge server **402** is capable of monitoring the network traffic stream passing between the POP's **114** and the network **100**, including the service provider's **120** hardware, such as the cache **208** and the DNS translation server **204**, DNS A. The edge server **402** is further capable of selectively intercepting that traffic and preventing it from reaching its intended destination, modifying the intercepted traffic and reinserting the modified traffic back into the general network traffic stream. In one embodiment, the facilities and capabilities of the edge server **402** are provided to content delivery services and or Web servers **108** on a fee for services basis as will be described below. Further, an edge server **402** may be provided at every major service provider **118**, **120** so as to be able to selectively intercept network traffic at all possible POP's **114**, **116** of the network **100**.

**[0080]** Referring to FIG. **4**A, the edge server **402** includes a request interceptor **404**, a request modifier **406**, and a request forwarder **408**. The edge server **402** may include one or more processors, a memory coupled with the processors and one or more network interfaces or other interfaces, also coupled with the processors and operative to couple or integrate the edge server **402** with the routing equipment of the service provider **120**. Optionally, the edge server **402** may include secondary storage including a second memory such as a cache memory, hard disk or other storage medium. Further, the processors of the edge server **402** may be dedicated processors to perform the various specific functions described below. The edge server **402** may further include software and/or firmware provided in a read only memory or in a secondary storage which can be loaded into memory for execution or, alternatively, executed from the secondary storage by the processors, to implement the various functions as detailed below. To further improve performance, such software functionality may also be provided by application specific integrated circuits ("ASICs"). For example, an edge server **402** can comprise a Compaq TaskSmart™ Server manufactured by Compaq Corporation, located in Austin, Tex. The TaskSmart™ Server can include an Intel IXA1000 Packet Processor manufactured by Intel Corporation, located in Santa Clara, Calif. to perform the traffic monitoring and port specific traffic interception functions as well as the security applications as detailed below. The TaskSmart™ Server can further include a PAX.port 1100™ classification adapter manufactured by Solidum Corporation, located in Scotts Valley, Calif., which can receive intercepted DNS translation requests from the

packet processor and, utilizing a look up table (which may be stored in a memory providing high speed access), determine whether or not the request is associated with a subscribing server **108**, as described below. The classification adapter can attempt to resolve the DNS request or hand it off to a general processor such as an Intel Pentium III™ or other general purpose processor for further operations as detailed below. An exemplary edge server **402** may have six 9.1 GB hot pluggable hard drives possibly in a RAID or other redundant configuration, two redundant hot pluggable power supplies, five 10/100 Ethernet ports and 1 GB of main memory and capable of handling in excess of 1250 requests per second.

**[0081]** The request interceptor **404** listens to the network traffic passing between the POP's **114** of the affiliated service provider **120** and the network **100** and selectively intercepts DNS translation requests generated by any of the clients **102**, **104** coupled with the particular affiliated service provider **120**. Such interception may be accomplished by identifying the destination "port" of any given data packet generated by a client **102**, **104**, alternatively other methods of identifying a packet type may be used such as by matching the destination address with a list of known DNS translation server addresses. A port in programming is a "logical connection place" and specifically, within the context of the Internet's communications protocol, TCP/IP, a port is the way a client program specifies a particular applications program on a computer in a network to receive its requests. Higher-level applications that use the TCP/IP protocol such as HTTP, or the DNS translation protocol, have ports with pre-assigned numbers. These are known as "well-known ports" and have been assigned by the Internet Assigned Numbers Authority (IANA). Other application processes are given port numbers dynamically for each connection. When a service (server program) initially is started, it is said to bind to its designated port number. As any client program wants to use that server, it also must request to bind to the designated port number. Port numbers are from 0 to 65536. Ports 0 to 1024 are reserved for use by certain privileged services. For the HTTP service, port 80 is defined as a default and it does not have to be specified in the Uniform Resource Locator (URL). In an alternative embodiment, the routing equipment **206** of the service provider **120** is programmed to forward all DNS translation requests to the edge server **402**. The request interceptor **404** can then choose which DNS translation requests to intercept as described below. This alternative routing scheme may implemented through a traffic routing protocol such as a Domain Name System Translation Protocol ("DNSTP"). This protocol is implemented in similar fashion to the Web Cache Control Protocol ("WCCP") which is used to redirect HTTP requests to proxy cache servers based on the specified port in the packet.

**[0082]** DNS translation requests are identified by the port number **53**. The request interceptor **404** monitors for all data traffic with the specified port number for a DNS translation request. It then is capable of intercepting DNS translation requests generated by clients **102**, **104** such as computer workstations, wireless devices or internal DNS translators on a private network. The request interceptor **404** is aware of which content delivery services subscribe to the edge server **402** service and is operative to selectively intercept DNS translation requests associated with the subscribing content delivery service, i.e. contain translations intended to be translated by the DNS translator of the content delivery service or server **108**. The request interceptor **404** may provide a table or database stored in memory or other storage device where it can look up the service subscribers to determine whether the particular DNS translation request should be intercepted. The request interceptor **404** may make this determination at "wire speed", i.e. at a speed fast enough so as not to impact the bandwidth and throughput of the network traffic it is monitoring.

**[0083]** When a DNS translation request is generated by a client **102**, **104** to translate a domain name associated with the content delivery service, as described above for the modified HTTP slow start protocol, to retrieve the separately stored Web page content, that DNS translation request will be selectively intercepted by the request interceptor **404** of the edge server **402**. The interception will occur before it reaches the bound/destination DNS translation server bound to or specified by the client **102**, **104**. The request interceptor **404** will then pass the intercepted DNS translation request to the request modifier **406**.

**[0084]** The request modifier **406** modifies the DNS translation request to include additional information or indicia related to the client **102**, **104** so that the intelligent DNS translation server of the content delivery service or server **108** can make a more optimized decision on which of the geographically dispersed cache servers **302**, **304** would be optimal to serve the requests of the client **102**, **104**. This additional information can include the geographic location of the POP **114** or the characteristics of the downstream network infrastructure, such as whether the client **102**, **104** is connecting to the POP **114** via a modem connection or a broadband connection or whether the client **102**, **104** is a wired or wireless client, etc. It will be appreciated that there may be other information or indicia that the edge server **402** can provide to enhance the DNS translation request and this may depend on the capabilities of the subscribing content delivery services, and all such additional indicia are contemplated. The subscribing content service providers may be familiar with the indicia data types, content and possible encoding schemes which the edge server **402** can provide so as to establish a protocol by which the data is transferred to the subscribing content delivery service. Such information is then recognized and used by the content delivery service to enhance their redirection. For example, by knowing the geographic location of the POP **114** as provided by the edge server **402**, the content delivery service does not need to rely on the IP address of the bound DNS server from which it receives the translation request (described in more detail below) and therefore will make a more accurate determination of which cache server **302**, **304** to choose. Similarly, by knowing the capabilities of the downstream network infrastructure from the POP **114** to the client **102**, **104** as provided by the edge server **402**, the content delivery service can redirect content requests by the client **102**, **104** to a cache server **302**, **304** with capabilities which match. For example, where the POP **114** to client **102**, **104** connection is a broadband connection, the client **102**, **104** can be directed to make its requests to a cache server **302**, **304** capable of utilizing the available bandwidth to the client **102**, **104**. In contrast, where the client **102**, **104** connects to the POP **114** via a modem/standard telephone line connection, the content delivery service can direct that client **102**, **104** to make its requests to an appropriate low speed cache server **302**, **304** so as not to waste the resources of high bandwidth cache servers **302**, **304**.

**[0085]** Once the DNS translation request has been modified, the request modifier **406** passes the DNS translation

request to the request forwarder **408**. The request forwarder places the modified DNS translation request back into the general stream of network traffic where it can be routed to its originally intended destination, i.e. the bound or specified DNS translation server **204**, **410** bound to or specified by the originating client. The DNS translation server **204**, **410** will translate the request as described above, by contacting the DNS translation server **306**, DNS C associated with the content delivery service. As described above, the intelligent DNS translation server **306** of the content delivery service will see the modified request and utilize the information/indicia included by the edge server **402** to make a more optimal translation and cache server **302**, **304** assignment.

**[0086]** FIG. **4** depicts an exemplary content delivery transaction between Client **1 102** and Server **1 108**. For the purposes of this example transaction, Client **1 102** is bound to DNS translation server **204**, labeled "DNS A**1**." Client **1 102** initiates the HTTP slow start protocol as described above by making its initial request for an HTML Web page from Server **1 108**. This initiation may require making several DNS translations as described above, labeled as "A", "B**1**", "C**1**", "D**1**", "E**1**", "F**1**", "G**1**", "H." Once the HTML Web page has been received by Client **1 102**, it will begin to request the separately stored content associated with the Web page. As was discussed above, where Server **1 108** has been "content enabled" and subscribes to the content delivery service, the URL's of the separately stored content will comprise the domain name of the content delivery service. As well, as discussed above, these domain names will require complete DNS translation all the way back to the DNS translation server **306**, DNS C of the content delivery service because the content delivery service ensures that all of its translations have TTL=0 and therefore cannot be stored in any given downstream DNS translation server. Therefore, Client **1 102** will initiate a DNS translation for the URL of the separately stored content, labeled "I." This DNS translation request will go through the POP **114** and to the routing equipment **206** of the service provider **120**. The edge server **402** will see this DNS translation request and identify the domain name of the content service provider as a subscriber to its service. The request interceptor **404** will then intercept the DNS translation request, labeled as "J." The request interceptor **404** will pass the intercepted DNS translation request to the request modifier **406** which will append a geographic indication representing the physical geographic location of the edge server **402** or alternatively, other downstream network characteristics. Given that the edge server **402** is located geographically proximate to the POP's **114**, this information will more accurately represent the location of Client **1 102**. Alternatively, while the edge server **402** may not be geographically proximate to the POP's **114**, it may be network proximate to the POP's **114**, i.e. there may be a minimal of network infrastructure between the POP's **114** and the edge server **402**. In some instances, while one device on a network may sit physically right next to another device on the network, the network topology may dictate that data flowing between those devices flow over a circuitous route to get from one device to the other. In this case, while the devices are physically close to one another, they are not logically close to one another. The edge server **402** may be familiar, not only with its geographic location within the context of the network **100** as a whole, but also its logical location. Using this information, the edge server **402** can further include information as to this logical location so as to enable, not only a geographically optimal redirection of Client **1**'s **102** requests but also a network topology based optimized redirection.

**[0087]** The request modifier **406** will then pass the modified DNS translation request to the request forwarder **408** which will place the request back into the general traffic stream, and in this case, on its way to the original intended recipient, Client **1**'s **102** bound DNS translation server **204**, DNS A**1**, labeled as "K**1**." DNS A**1 204** will then translate the modified DNS translation request as described above and return the translation to Client **1 102**, labeled as "L**1**", "M**1**", "N**1**", "O." DNS C **306**, using the additional data provided by the edge server **402**, will supply a DNS translation redirecting Client **1**'s **102** requests to Cache C**2 304** which is the optimal cache server.

**[0088]** FIG. **4** further depicts a second exemplary content delivery transaction between Client **1 102** and Server **1 108**. For the purposes of this second example transaction, Client **1 102** is a wireless or mobile wired device connecting to a POP **114** provided by service provider **120** but is bound to DNS translation server **410**, labeled "DNS A**2**" provided by service provider **118**. Note that in the previous exemplary transaction above, Client **1 102** was bound to DNS A**1 204**, e.g., Client **1 102** was a stationary computer or private network subscribing to the network **100** connection services of service provider **120** and using the POP's **114** provided by the service provider **120** and that service provider's **120** DNS translation server **204**, DNS A**1**. In the current example, Client **1 102** is a subscriber to the network **100** connections services of service provider **118** but is currently roaming, i.e. geographically located in an area not serviced by a POP **116** provided by service provider **118**. Therefore Client **1 102** must use a POP **114** provided by a service provider **120**, which for example, has an agreement to allow such connections from service provider's **118** customers. However, because DNS translation servers are bound to the Client **102**, i.e. the address of the preferred DNS translation server is typically programmed into the Client **102**, Client **102** will still use its programmed or bound DNS translation server, typically the DNS translation server provided by its service provider **118**, in this case DNS A**2 410**.

**[0089]** As above, Client **1 102** initiates the HTTP slow start protocol as described above by making its initial request for an HTML Web page from Server **1 108**. This initiation may require making several DNS translations as described above but using DNS A**2 410** instead of DNS A**1 204**, labeled as transactions "A", "B**2**", "C**2**", "D**2**", "E**2**", "F**2**", "G**2**", "H." Once the HTML Web page has been received by Client **1 102**, it will begin to request the separately stored content associated with the Web page. As was discussed above, where Server **1 108** has been "content enabled" and subscribes to the content delivery service, the URL's of the separately stored content will comprise the domain name of the content delivery service. As well, as discussed above, these domain names will require complete DNS translation all the way back to the DNS translation server **306**, DNS C of the content delivery service because the content delivery service ensures that all of its translations have TTL=0 and therefore cannot be stored in any given downstream DNS translation server. Therefore, Client **1 102** will initiate a DNS translation for the URL of the separately stored content, labeled "I." This DNS translation request will go through the POP **114** and to the routing equipment **206** of the service provider **120**. The edge server **402** will see this DNS translation request and identify the domain name of the content service provider as a subscriber to its

service. The request interceptor **404** will then intercept the DNS translation request, labeled as "J." The request interceptor **404** will pass the intercepted DNS translation request to the request modifier **406** which will append a geographic indication representing the physical geographic location of the edge server **402**. Given that the edge server **402** is located geographically proximate to the POP's **114**, this information will more accurately represent the location of Client **1 102**. Alternatively, while the edge server **402** may not be geographically proximate to the POP's **114**, it may be network proximate to the POP's **114**, i.e. there may be a minimal of network infrastructure between the POP's **114** and the edge server **402**. In some instances, while one device on a network may sit physically right next to another device on the network, the network topology may dictate that data flowing between those devices flow over a circuitous route to get from one device to the other. In this case, while the devices are physically close to one another, they are not logically close to one another. The edge server **402** may be familiar, not only with its geographic location within the context of the network **100** as a whole, but also its logical location. Using this information, the edge server **402** can further include information as to this logical location so as to enable, not only a geographically optimal redirection of Client **1**'s **102** requests but also a network optimized redirection.

**[0090]** The request modifier **406** will then pass the modified DNS translation request to the request forwarder **408** which will place the request back into the general traffic stream, and in this case, on its way to the original intended recipient, Client **1**'s **102** bound DNS translation server **410**, DNS A**2**, labeled as "K**2**." DNS A**2** **410** will then translate the modified DNS translation request as described above and return the translation to Client **1 102**, labeled as "L**2**", "M**2**", "N**2**", "O." In this case, without the additional data provided by the edge server **402**, DNS C **306** would have made its redirection determination based on the IP address of DNS A**2** **410**, as described above. This would have resulted in Client **1 102** being redirected to Cache C **1302** instead of the optimal cache for its location. However, DNS C **306**, using the additional data provided by the edge server **402** is able to supply a DNS translation redirecting Client **1**'s **102** requests to Cache C**2** **304** which is the optimal cache server.

## VI. The Second Embodiment

**[0091]** Referring to FIG. **5**, there is depicted a second embodiment of an enhanced DNS system to facilitate content delivery which is not dependent upon the geographic location of the downstream DNS server and is capable of enhancing the HTTP slow start protocol.

**[0092]** FIG. **5** shows Clients **1** and **2 102**, **104** coupled with POP's **114**, POP1A and POP 1B of service provider **120**. As described above, service provider **120** includes routing equipment **206**, Cache **208** and DNS translation server **204** to facilitate coupling the POP's **114** with the network **100**. In addition, service provider **120** further includes an edge server **502** and an edge cache **508**. In one alternative embodiment, the edge server **502** is integrated with a router. In another alternative embodiment, the edge server **502** is integrated with a generally accessible DNS translation server such as DNS A **204**. In still another alternative embodiment, the edge server **502** can be integrated with the edge cache **504** or each can be provided as separate devices or the edge server **502** can utilize an existing cache server **208** provided by the service provider **120**. For clarity, a number of the components of FIG. **4** have been omitted from FIG. **5**.

**[0093]** Referring to FIG. **5**A, the edge server **502** further includes a request interceptor **504** and an edge DNS translation server **506**. In one embodiment, the facilities and capabilities of the edge server **502** may be provided to Web servers **108** on a subscription or fee for services basis as will be described below. An edge server **502** and edge cache **508** may be provided at every service provider **118**, **120** or at every major network **100** intersection so as to provide coverage of every POP **114**, **116** on the edge **124** of the network **100**. The edge server **402** may include one or more processors, a memory coupled with the processors and one or more network interfaces or other interfaces, also coupled with the processors and operative to couple or integrate the edge server **502** with the routing equipment of the service provider **120**. Optionally, the edge server **502** may include secondary storage including a second memory such as a cache memory, hard disk or other storage medium. Further, the processors of the edge server **502** may be dedicated processors to perform the various specific functions described below. The edge server **502** may further include software and/or firmware provided in a read only memory or in a secondary storage which can be loaded into memory for execution or, alternatively, executed from the secondary storage by the processors, to implement the various functions as detailed below. To further improve performance, such software functionality may also be provided by application specific integrated circuits ("ASICs"). For example, an edge server **502** can comprise a Compaq TaskSmart™ Server manufactured by Compaq Corporation, located in Austin, Tex. The TaskSmart™ Server can include an Intel IXA1000 Packet Processor manufactured by Intel Corporation, located in Santa Clara, Calif. to perform the traffic monitoring and port specific traffic interception functions as well as the security applications as detailed below. The TaskSmart™ Server can further include a PAX.port 1100™ classification adapter manufactured by Solidum Corporation, located in Scotts Valley, Calif., which can receive intercepted DNS translation requests from the packet processor and, utilizing a look up table (which may be stored in a memory providing high speed access), determine whether or not the request is associated with a subscribing server **108**, as described below. The classification adapter can attempt to resolve the DNS request or hand it off to a general processor such as an Intel Pentium III™ or other general purpose processor for further operations as detailed below. An exemplary edge server **502** may have six 9.1 GB hot pluggable hard drives which may be in a RAID or other redundant configuration, two redundant hot pluggable power supplies, five 10/100 Ethernet ports and 1 GB of main memory and capable of handling in excess of 1250 requests per second.

**[0094]** As described above, the request interceptor **504** operates to selectively intercept DNS translation requests associated with its subscribing Web server **108** generated by clients **1** and **2 102**, **104**. Alternatively, DNS translation requests can be forwarded to the request interceptor **504** by the service provider's **120** routing equipment **206** as described above. In this embodiment, however, because the request interceptor **504** is monitoring for DNS translation requests associated with the server **108** and not some separate content delivery service, the request interceptor **504** will selectively intercept all DNS translation requests, including the initial request to retrieve the HTML Web page file and begin the HTTP slow start protocol. Again, the request inter-

ceptor **504** may include a database or table stored in a memory or other storage medium which indicates the domain names or other identification information of subscribing servers **108**.

**[0095]** The selectively intercepted DNS translation requests are passed by the request interceptor **504** to an internal edge DNS translation server **506**. The internal edge DNS translation server **506** then translates the given domain name into the IP address of the edge cache **508** and returns this translation to the client **102**, **104**, labeled "A", "B", "C", "D." This effectively redirects the client **102**, **104** to make all of its content requests from the edge cache **508**. This differs from a proxy server, where the client **102**, **104** is not redirected but either thinks that it is communicating with the server **108** (in the case of a transparent or server side reverse proxy server) or has been specifically programmed to communicate its requests to the proxy server (in the case of a client side forward proxy server). The edge cache **508** operates as a normal cache server as described above, attempting to satisfy content requests from its cache storage. However, when the requested content is not available in the cache storage (a cache miss), the request is proxied to the server **108** by the edge cache **508** and/or edge server **502**, i.e. the edge cache **508** and/or edge server **502** make the request on behalf of the client **102**, **104**. This is in contrast to normal cache servers which forward the request from the client **102**, **104** onto the server **108** upon a cache miss.

**[0096]** Cache misses are handled as described above, the edge server **502** or alternatively the edge cache **508** makes its own request for the uncached content from the server **108**. Alternatively, other algorithms can be used to reduce or eliminate cache misses including mirroring the content of the server **108** coupled with periodic updates either initiated by the edge server **502** or edge cache **508** or periodically pushed to the edge cache **508** by the server **108**. In another alternative embodiment, the server **108** can update cached content when it determines that such content has changed or can provide time durations or other form of expiration notification after which the edge cache **508** purges the content. Where the content expires or is otherwise purged from the edge cache **508**, the next request for that content will miss and cause a reload of the content from the server **108**. One of ordinary skill in the art will recognize that there are many caching algorithms which may be used to maintain cache coherency. In one embodiment, the edge cache **508** maintains a replacement policy of replacing the oldest data in the cache when the cache is full. Again, one of ordinary skill in the art will recognize that there are many different cache replacement algorithms that may be used.

**[0097]** In this way, the edge server **502** and edge cache **508** act similarly to a forward or reverse proxy server for all of its subscribing servers **108**. Generally, a reverse proxy server is a proxy server that hides multiple source servers behind a single address. A reverse proxy server allows a content provider to serve their content from multiple host computers without requiring users to know the addresses of each of those computers. When a user makes a request to a content provider, they use the address of the reverse proxy server. The reverse proxy server intercepts the requests for content from the source and redirects those requests to the appropriate host computer within the content provider. The redirection can be based on a which machine contains the requested content or can be used to balance the request load across multiple mirrored servers. A forward proxy server sits between a workstation user and the Internet so that the enterprise can ensure security, administrative control and caching services. A forward proxy server can be associated with a gateway server which separates the enterprise network from an outside network such as the Internet. The forward proxy server can also be associated with a firewall server which protects the enterprise network from outside intrusion. Forward proxy servers accept requests from their users for Internet content and then request that content from the source on behalf of the user. The forward proxy server modifies the identity of the requestor (typically by altering the internet protocol address of the requester) to be that of the forward proxy server. A user workstation typically must be configured to use a proxy server. A forward proxy server can also be a cache server (see above).

**[0098]** A major distinction between the edge server **502** and a proxy server is that there is no one address of the edge server **502**. The edge server **502** effectively needs no address because it intercepts the necessary network traffic. Therefore, clients **102**, **104** do not need to know of the existence of the edge server **502** and can operate as they normally do, making content requests of servers **108**. However, when they request content from a subscribing server **108**, that content will be transparently provided instead by the edge server **502** and edge cache **508**.

**[0099]** Effectively, the edge server **502** and edge cache **508** isolate the sub-network comprising the service provider **120**, the POP's **114** and the clients **102**, **104** from the subscribing server **108**, i.e. the clients **102**, **104** are prevented from any direct contact with server **108**. Should the client **102**, **104** request uncached content, it is the edge cache **508** and not the client **102**, **104** which will request that content from the server **108**. Furthermore, the edge server **502** and edge cache **508** can ensure that the request is valid and legitimate before communicating with the server **108**. This "trusted" relationship between the edge server **502**/edge cache **508** and the subscribing servers acts as additional security for the servers **108**. Those servers **108** can be programmed to ignore content requests from clients **102**, **104** since they know that only valid content requests can come from an edge server **502**/edge cache **508**. Furthermore, the edge server **502** alleviates the load on the server's **108** internal DNS translation server **210** because all DNS translations will be handled by the internal edge DNS translator **506**.

**[0100]** The effect of the edge server **502** and edge cache **508** is faster DNS translations and better response times to requests. The edge cache **508** can serve the initial HTML Web page file to the requesting client **102**, **104** and immediately begin the process of requesting the separately stored content (if not already in the cache) from the server **108** in order to speed up the HTTP slow start protocol. Furthermore, the edge caches **508** may be located through out the edge **124** of the network **100** be capable of communicating and sharing cached data. In this way, the edge caches **508** can further reduce the demands placed on the subscribing servers **108**.

**[0101]** Notice, however, that because the edge server **502** intercepts translation requests, a client **102**, **104** that already knows the IP address of the server **108**, can still directly communicate with that server **108** via the network **100**. In this case, the server **108** can choose to disconnect itself from the network **100** generally (or refuse to accept any inbound content requests from the network **100** that do not originate from an edge server **502**/edge cache **508**, however such origination may be forged). The edge server **502** and edge cache **508** can

then connect with the server **108** using private proprietary communications links which are not available to clients **102**, **104**.

**[0102]** The edge server **502** and edge cache **508** can also provide load balancing and security services to the subscribing servers. For example, open source load balancing techniques available from eddieware.org can be implemented in the edge server **502**. Where a particular server **108** comprises multiple sub-servers, the edge cache **508** can be programmed to request uncached content from the sub-servers so as to spread the load on each sub-server.

**[0103]** Further, because the edge server **502** acts as the DNS translator server for its subscribers, it can detect and absorb any security attacks based on the DNS system, such as distributed denial of service attacks, "DDoS." A Denial of Service Attack ("DoS" or Distributed DoS "DDoS") is an incident in which a user or organization is deprived of the services of a resource they would normally expect to have. Typically, the loss of service is the inability of a particular network service, such as e-mail, to be available or the temporary loss of all network connectivity and services. In the worst cases, for example, a Web site accessed by millions of people can occasionally be forced to temporarily cease operation. A denial of service attack can also destroy programming and files in a computer system. Although usually intentional and malicious, a denial of service attack can sometimes happen accidentally. A denial of service attack is a type of security breach to a computer system that does not usually result in the theft of information or other security loss. However, these attacks can cost the target person or company a great deal of time and money.

**[0104]** There are two related varieties of DDoS attacks. One attempts to shut down the DNS system in relation to the target site so that no legitimate user can obtain a valid translation and make a request from the site. Another type of DDoS attack attempts to overload the server **108** directly with a flood of content requests which exceed the capacity of the server. However, it will be appreciated that, by placing edge servers **502** and edge caches **508** so that all POP's **114**, **116** are covered and can be monitored, DDoS attacks can never reach the server **108** itself and will always be detected close to their origination by an edge server **502** where they can be stopped and isolated. It will be further apparent that where a DDoS attack cripples one edge server **502** and its associated sub-network, the remaining edge servers **502** at other service providers **118**, **120** (and their associated sub-networks) can remain operational and therefore the server **108** suffers minimal impact as a result of the DDoS attack. In addition, the edge server **502** and edge cache **508** may provide bandwidth and processing power far in excess of that needed by the sub-network comprising the POP's **114** and service provider **120** in order to be able to absorb DDoS attacks and not be crippled by them.

**[0105]** It will further be appreciated, that the edge server **502** can incorporate the capabilities of the edge server **402** by providing enhanced DNS translations for subscribing content delivery services as well as the enhanced content delivery itself for subscribing servers **108**.

**[0106]** In addition, where client **102**, **104** is a private network such as an intranet, which has its own internal DNS translation server which is making DNS translation requests out to the network **100**, the edge server **502** can set its returned DNS translations to have a TTL=0 so that the client's **102**, **104** internal DNS server must always forward DNS translation requests to subscribing server **108** upstream where they can be intercepted by the edge server **502**. Otherwise, the caching function of the client's **102**, **104** internal DNS translation server would prevent proper DNS translations from occurring. Notice that this is not an issue in the first embodiment, because as discussed above, the content delivery service performs the DNS translations and always sets translation TTL=0 to facilitate its operation.

## VII. The Third Embodiment

**[0107]** Referring to FIG. **6**, there is depicted an enhanced network **100** to facilitate content delivery and network **100** security. FIG. **6** depicts clients **1** and **2** **102**, **104** connected with POP's **114**, POP**2**A and POP**2**B of service provider **118** effectively forming a sub-network of the network **100**. Further, clients **3** and **4** **106**, **612** are shown connected to POP's **116**, POP**1**A and POP**1**B of service provider **120**. Further, service providers **118**, **120** each include an edge server **602**A, **602**B and an edge cache **604**A, **604**B coupled with the routing equipment **206** of the service providers **118**, **120** so as to be able to intercept all network traffic flowing between the POP's **114**, **116** and the network **100**. In one alternative embodiment, the edge server **602** is integrated with a router. In another alternative embodiment, the edge server **602** is integrated with a generally accessible DNS translation server such as DNS A**1** **204** or DNS A**2** **410**. In still another alternative embodiment, the edge server **602** is integrated with the edge cache **604**, or alternatively they can be implemented as separate devices or the edge server **602** can utilize a cache server **208** provided by the service provider **118**, **120** (not showing in FIG. **6**). In one embodiment, the facilities and capabilities of the edge servers **602** may be provided to Web servers **108** on a subscription or fee for services basis as will be described below. An edge server **602** and edge cache **604** may be provided at every service provider **118**, **120** or at every major network **100** intersection so as to provide coverage of every POP **114**, **116** on the edge **124** of the network **100**, i.e. to minimize the size of the sub-network downstream from the edge server **602**.

**[0108]** Referring to FIG. **6**A, the edge server **602** further includes a request filter **606**, a request interceptor **608** and a proxy server and/or internal DNS translation server **610**. The edge server **602** is capable of operating similarly to the edge server **402** and **502** of the previous embodiments. However, the edge server **602** is further capable of intercepting data traffic at the packet level based on the source or destination IP address contained within the packets flowing past the edge server **602**. In this way, the edge server **602** is able to provide complete isolation of its subscribing servers **108**, **110**. Any network traffic destined for a subscribing server **108**, **110** can be intercepted by the edge server **602** and acted upon. The edge server **602** may include one or more processors, a memory coupled with the processors and one or more network interfaces or other interfaces, also coupled with the processors and operative to couple or integrate the edge server **602** with the routing equipment of the service provider **120**. Optionally, the edge server **602** may include secondary storage including a second memory such as a cache memory, hard disk or other storage medium. Further, the processors of the edge server **602** may be dedicated processors to perform the various specific functions described below. The edge server **602** may further include software and/or firmware provided in a read only memory or in a secondary storage which can be loaded into memory for execution or, alternatively, executed

from the secondary storage by the processors, to implement the various functions as detailed below. To further improve performance, such software functionality may also be provided by application specific integrated circuits ("ASICs"). For example, an edge server **602** can comprise a Compaq TaskSmart™ Server manufactured by Compaq Corporation, located in Austin, Tex. The TaskSmart™ Server can include an Intel IXP 1200 Packet Processor manufactured by Intel Corporation, located in Santa Clara, Calif. to perform the traffic monitoring and port specific traffic interception functions as well as the security applications as detailed below. The TaskSmart™ Server can further include a PAX.port 1100™ classification adapter manufactured by Solidum Corporation, located in Scotts Valley, Calif., which can receive intercepted DNS translation requests from the packet processor and, utilizing a look up table (which may be stored in a memory providing high speed access), determine whether or not the request is associated with a subscribing server **108**, as described below. The classification adapter can attempt to resolve the DNS request or hand it off to a general processor such as an Intel Pentium III™ or other general purpose processor for further operations as detailed below. An exemplary edge server **602** may have six 9.1 GB hot pluggable hard drives which may be in a RAID or other redundant configuration, two redundant hot pluggable power supplies, five 10/100 Ethernet ports and 1 GB of main memory and capable of handling in excess of 1250 requests per second.

**[0109]** For valid content requests from clients **102**, **104**, **106**, **612**, the edge server **602** in combination with the edge cache **604** acts just like the edge server **502** and edge cache **508** in the previous embodiment. Such requests will be redirected and served from the edge cache **604**. Again an edge cache **604**A at one service provider **118** can share cached data from another edge cache **604**B located at another service provider **120**. In this way, a comprehensive content delivery service is created which completely isolates the core **122** of the network **100** from untrusted and unregulated client **102**, **104**, **106**, **602** generated network traffic. Such traffic is isolated at the edge **124** of the network **100** within the subnetwork below, i.e. downstream from the edge server **602** where it can be contained, monitored and serviced more efficiently. In terms of the economics of the network **100** then, the load on the expensive high bandwidth communications resources located at the core **122** of the network **100** is reduced and maintained at the edge **124** of the network where bandwidth is less expensive.

**[0110]** In addition, the edge server's **602** packet level filter **606** prevents any client **102**, **104**, **106**, **612** from directly communicating with any subscribing server **108**, **110** even if that client **102**, **104**, **106**, **612** has the IP address of the server **108**, **110**. The packet level filter **606** will see the destination IP address in the network traffic and selectively intercept that traffic.

**[0111]** Once traffic is intercepted, the edge server **602** can perform many value added services. As described above, the edge server **602** can perform DNS translations and redirect clients **102**, **104**, **106**, **612** to make their content requests to the edge cache **604**. The edge server **602** can also monitor the data transmission being generated by clients **102**, **104**, **106**, **602** for malicious program code, i.e. program code that has been previously identified (by the server **108** or a third party such as a virus watch service) as unwanted, harmful, or destructive such as viruses or other unauthorized data being transmitted. For example, if the edge server **602**A detects a data packet whose origin address could not have come from the downstream network or POP's **114** to which it is connected, the edge server **602**A knows that this data packet must be a forgery and can eradicate it or prevent it from reaching the network **100**. For example, where a computer hacker surreptitiously installs a program on client **1 102** to generate a DDoS attack on server **1 108** but appear as if the attack is coming from client **4 612**, the edge server **602**A will see the packets generated by Client **1 102** and also see that they contain a source address associated with a client, in this case client **4 612**, which based on the address, could not have come from any POP **114** of the service provider **118** to which the edge server **602**A is connected. In this case, the edge server **602**A can eliminate that packet and then attempt to identify the actual originating client, in this case client **1 102**, so that the attack can be stopped and investigated. In addition, because general network traffic is unable to reach the subscribing servers **108**, **110**, hackers would be unable to access those servers in attempts to steal valuable data such as credit card numbers.

**[0112]** Furthermore, to enhance security, as described above, the connections between the edge servers **602**A, **602**B and edge caches **604**A, **604**B can alternatively be made through private communications links instead of the publicly accessible network **100**. In this way, only trusted communications over secure communications links can reach the servers **108**, **110**. This security in combination with the multiple dispersed edge servers **602**A, **602**B and edge caches **604**A, **604**B covering the edge **124** of the network **100** ensures that the subscribing servers **108**, **110** will be able to serve their content under high demand and despite security threats.

**[0113]** In operation, the request filter **606** pre-filters traffic before receipt by the request interceptor **608**. The request filter **606** may provide subscriber detection, "ingress filtering" capability, and cache hit determination. The request filter **606** first determines whether or not the traffic it is monitoring is associated with a subscribing/affiliated server **108**, **110**. If not, this traffic is ignored and allowed to proceed to its final destination. The request filter **606** may comprise a table or database of subscribers stored in a memory or other storage device. If the traffic is associated with a subscribing server **108**, **110**, the request filter **606** then performs ingress filtering by determining whether the packet originated downstream from the edge server **602**, i.e. from the downstream subnetwork, the POP's **114**, **116** affiliated with this particular edge server **602** or from upstream which indicates that they did not originate from an affiliated POP **114**, **116** and therefore are suspect and most likely invalid. Packets originating from upstream may be eradicated. Valid downstream originating packets are then analyzed for the content/nature of the packet. If the packet comprises a content request, the request filter **606** can determine if the request can be satisfied by the edge cache **604**. In one embodiment, the request filter **606** maintains a table or database in memory or other storage medium of the edge cache **604** contents. If the packet contains a request that can be satisfied from the edge cache **604**, the request filter **606** will hand the packet/request off to the edge cache **604**. The edge cache **604** operates similarly to the edge cache **508** of the above embodiment. If the packet comprises a DNS translation request or a content request which cannot be satisfied by the edge cache **604**, the request filter **606** hands the packet/request off to the internal request transmitter/proxy server/DNS translation server **610** to proxy, e.g. transmit, the request to the intended server or provide a DNS

translation. The server **108** responds with the requested content to the edge server **602** and/or edge cache **604** which then returns the response to the requesting client **102**, **104**, **106**, **612** and/or caches the response. In one embodiment, the request filter **606** performs its functions at "wire speed", i.e. a speed at which will have minimal impact on network **100** bandwidth and throughput. The request filter **606** then further alleviates the processing load on the internal DNS translator/proxy server **610** of the edge server **602**.

**[0114]** It will be appreciated that, in any of the above embodiments, additional upstream edge servers and edge caches can be provided at major peering points to provide a layered hierarchy of cache storage tiers which further enhances the response times. In addition, a hierarchy of edge servers and edge caches can be used to handle any overload of one or more downstream edge servers and edge caches or to handle spill over of capacity or even a complete failure of one or more edge servers or edge caches. By forming a hierarchy of edge servers and edge caches, the network **100** and service provider **118**, **120** fault tolerance is increased and enhanced.

**[0115]** The edge servers and edge caches therefore act similarly to proxy servers. However, where a forward proxy server alters the source address of a given content request (effectively making that request on behalf of a client), an edge server merely adds additional data to the source address which can then be used by upstream content delivery services for more accurate redirection or intercepts and substitutes the address translation transactions to redirect a client to make its requests from a nearby edge cache. Therefore, there is no need to intercept content requests since those requests will have been already directed to the edge cache. While a reverse proxy server is typically tightly bound with a group of servers which belong to a single entity or comprise a single Web site, the edge server performs reverse proxy functions but for any entity or Web site which subscribes to the service. Furthermore, no changes are required to the client or the subscribing servers. Once the subscriber tables are updated within the edge servers, the edge server will then start to perform its functions on the network traffic of the subscribing Web server. The subscribing Web server does not need to alter their Web site in any way and the client does not need to be pre-programmed to communicate with the edge server.

**[0116]** Further the network of edge servers and edge caches located at every major network intersection so as to cover every POP, thereby minimizing the size of the sub-network downstream from the edge server, forms a security barrier which isolates the core infrastructure and servers of the network/internet from the edge where the clients are located. In addition to isolation, network performance is enhanced by virtually placing the content and services of core content providers at network-logically and physically-geographic proximate locations with respect to the clients. Content is placed as close as possible to the requesters of that content resulting in enhanced response times and enhanced throughput. This results in reduced load, congestion and bandwidth consumption of the expensive high capacity backbone links which form the core of the network. Trivial network traffic is maintained at the edge of the network speeding response times and throughput. In addition, the edge caches are capable of communicating with one another and sharing cached data, thereby greatly enhancing the caching effect and further reducing the load on the core of the network.

**[0117]** By further making the edge servers more intelligent, such as by adding additional processing capacity, dynamic load balancing services can be provided to the subscribing servers which can respond to changing demands for content. The edge servers and edge caches are further located to minimize the number of downstream clients, thereby forming sub-networks which can isolate and contain network traffic. This allows security services to be provided by isolating security threats to the smallest possible portion of the network generally while leaving the remaining portions of the network fully operational. Further, would be hackers are prevented from being able to directly access a subscribing server in an attempt to break in and steal valuable data. Therefore, even where a particular server has a security hole, the data stored there will still be protected. In addition, the edge server is aware of its physical/geographic location and its logical location within the network hierarchy allowing it to enhance content redirection services as clients switch to wireless connectivity or otherwise become more mobile in relation to their service providers. Finally, the provision of a decentralized DNS enhancement system, as provided by the disclosed embodiments, reduces the load on the existing DNS system and on subscribing servers' internal DNS systems as well as provides a distributed defense against DNS based denial of service attacks. Such attacks can be isolated to the smallest portion of the network possible and closest to the attack's source while the remaining portions of the network remain unaffected. Further, by isolating the attack, the source of the attack can be more easily pinpointed and investigated. Traffic can be monitored for unauthorized or malicious program code, i.e. program code previously identified as unwanted, harmful or destructive, such as the placement of zombies or virus programs. Such programs can be detected and eradicated before they can make it to their intended destination.

**[0118]** In addition, the provision of the decentralized DNS enhancement system, as provided by the disclosed embodiments, provides an infrastructure which may be used to supplant the existing DNS system and allow the creation of new domain names and a new domain name allocation service. New services such as a keyword based DNS system may also be provided to further increase the ease of use of the network **100** and which do not rely on any modifications to a user's Web browser program (i.e. remain transparent to both the client and the content provider). A user's attempt to request content from a subscribing content provider using a new domain name provided by this new DNS system would be intercepted prior to reaching the existing DNS system and be properly translated so as to direct the user to the content provider. Alternatively, the request may be redirected to an edge server and edge cache which proxies the request for the user to the content provider. Such a system allows the content provider to remain a part of the network **100**, i.e. remain connected to the Internet and maintain their access within the existing DNS system, or they may choose to completely disconnect from the network **100** altogether and utilize proprietary communications links to the network of edge servers and edge caches to provide users/clients with access to their content.

**[0119]** It will be further appreciated by one of ordinary skill in the art that the provision of numerous distributed edge servers and edge caches encircling the core of the network **100** provides a secure decentralized infrastructure on which service applications can be built. Through the provision of additional application and data processing capabilities within the edge servers, service applications such as user applications (for example, content monitoring/filtering, advertising

filtering, privacy management and network personalization), e-commerce applications (such as regional and local electronic store fronts, distributed shopping carts or advertising distribution), distributed processing applications, database access applications (such as distributed enterprise database access), communications applications (such as electronic mail, identity authentication/digital signatures, anti-spam filtering and spam source detection, voice telephony and instant messaging), search engine applications, multimedia distribution applications (such as MP3 or MPEG distribution and content adaptation), push content applications (such as stock quotes, news or other dynamic data distribution), network applications (such as on-demand/dynamic virtual private networks and network/enterprise security), etc. can be implemented. These applications can be implemented with minimal hardware at the network **100** core **122** because much of the processing load and bandwidth demands are distributed out at the edge **124** of the network **100**. Further, any application where decentralization of the client interface from the back-end processing enhances the application can be applied on a wide scale to the edge server infrastructure to reduce the centralized demands on the service providers.

## VIII. The Fourth Embodiment

**[0120]** The above embodiments intercept packets off the network and subsequently process and determine of a course of action to be taken with those intercepted packets. As was described above, this may include selective interception of packets, selective modification of those intercepted packets and the subsequent release/reinsertion of the packets, modified or unmodified and/or release of new packets, back into the general stream of network traffic. Selective interception includes the temporary interception of all packets presented on the inputs of the edge device and performing an initial evaluation to determine whether the packet should be immediately released or held/intercepted for further processing. The determination of whether or not a particular packet should be held/intercepted and the further processing/modification and/or subsequent release of the temporarily held packet are discussed in more detail below. It will be appreciated that there may be other methods of evaluating packets for possible interception which may utilize mechanisms other than temporarily buffering packets, in whole or in part, for the purpose of the evaluation, such as applying pattern matching as the packet moves through the packet processor, etc., and all such mechanisms are contemplated.

**[0121]** The embodiments disclosed above may be implemented by coupling, logically and/or physically, an edge server or similar device, such as the CloudShield CS-2000 DPPM or IBM BladeCenter having a CloudShield DPI or PN 41 blade as will be described in more detail below, with the routing equipment of a telecommunications carrier and/or Internet service provider to facilitate packet interception at a point as close to the POP's as possible or otherwise at a point where services, described in more detail below, may be provisioned. This allows for early and reliable packet interception and further ensures some measure of reliability in determining the origination of a particular packet, the advantages of which are described above. Alternatively, it was noted above that the interception of packets may also take place at other upstream locations. It will be appreciated that the optimal logical and/or physical placement of the disclosed embodiments is at any point within the network traffic flow which is most likely to see all of the relevant packets that are to be intercepted flow through. For example, in carrier-class implementations, as will be described below, optimal placement may be at the logical and/or physical location from which services are provisioned to a customer base, such as a central office, peering point, metro node, etc., though the disclosed embodiments may actually permit the relocation/distribution of service provisioning to more optimal physical and/or logical locations depending on the implementation.

**[0122]** In addition to the above embodiments, many other solutions to the Internet's problems may involve the use of such edge devices to provide services which process, route and/or deliver packets. Examples of such services include switching, server load balancing, DNS enhancement, quality of service enhancement, and content delivery enhancement such as caching and mirroring applications. Other examples include application specific devices which provide particular services such as intrusion protection devices, e.g. the IBM ISS Preventia appliance manufactured by IBM Corporation, firewall devices, e.g. the Checkpoint Firewall-1 manufactured by Check Point Software Technologies, Inc., located in Redwood City, Calif., anomaly or Distributed Denial of Service detection appliances such as devices manufactured by Arbor Networks, Inc., located in Lexington, Mass., or virus protection appliances. One exemplary device is the WebSwitch, manufactured by Alteon Web Systems, located in San Jose, Calif., which looks for packets with a port address of 53 indicating a DNS request. The WebSwitch intercepts and re-directs all DNS requests to alternate DNS servers. In contrast to application/service specific devices, the CS 2000 Deep Packet Processing Module ("DPPM"), manufactured by CloudShield Technologies, Inc., located in San Jose, Calif. (and described in more detail above) is a general purpose selective packet interception device which, in one application, may also intercept DNS requests but performs its interception selectively by analyzing the application data layer of the packets in addition to the header data layer. Any portion of the packet may be analyzed. Implementing these applications and enhancements requires intercepting packets as they flow over the network prior to their receipt by their intended destination, e.g. the destination to which the packets are addressed, processing the packet contents to determine a course of action and then performing that course of action, as was described.

**[0123]** As described above, it is optimal, in most Internet enhancement applications, to intercept and process packets close to their source before they enter the general stream of Internet traffic and diverge or alternatively, at one or more "choke points" through which all of the relevant packets must flow, such as a service provisioning point. For many of the above applications/services, it is desirable to intercept packets before they are routed beyond the edge of the Internet. However, as more and more of these solutions are developed, there will be more and more demand to intercept and process packets at the edge of the Internet or at critical packet switching choke points, such as Network Access Points ("NAP's"), or service provisioning points, such as those implemented by telecommunications carriers. In reality, this means that carriers, Internet Service Providers or NAP providers may want to provide more and more services, or more and more solution providers will want access to the equipment of the carriers, Internet Service Providers or NAP providers, at the edge of the Internet or in control of the desired choke points, to install their packet interception devices and provide their services, causing new problems in the process.

**[0124]** As will be appreciated, in order to intercept a packet flowing from one point to another, an intercepting device must be logically and/or physically installed in series with the packet flow so that all packets of interest must flow through the device. The intercepting device then intercepts the packets as they flow from point to point and determines what actions it will take with the packets. The costs of introducing an intercepting device include the reconfiguration required of the network to physically and/or logically integrate the device, the latency added by the processing time that it takes the device to perform its function, e.g. to determine the course of action, as well as the decrease in system-wide reliability/increased risk of failure introduced by the device and its interconnection. The latency can be quantified by the degradation in packet throughput, from the ideal "wire speed" throughput, that is caused by the processing time of the device. As can be seen, as more and more intercepting devices are introduced, each device must be connected in series with the others and each adds additional processing latency to the overall packet flow. Further, if the processing performed by such devices cannot match or exceed the speed at which data is flowing, the wire speed, network performance will suffer. Carriers or Internet service providers may be unwilling to introduce such additional overhead within their sub-networks and therefore may refuse to allow edge devices to be installed. Further, even if the benefits outweigh the additional latencies introduced, each additional device adds additional configuration complexities and an additional possible failure point which can bring down the service providers entire network, a risk Carriers or Internet service providers may be unwilling to take. In addition, since each intercepting device is connected in series with the others, each device (except for the first device in the chain) must wait for the upstream devices to process a given packet before processing the packet itself. This may cause contention for the service provider when determining which device to place ahead of another in the packet flow. Finally, the physical and/or electrical limitations of the service provider's hardware or environment may discourage or prevent the installation of multiple edge/intercepting devices.

**[0125]** As can be seen from the above embodiments, edge devices generally perform the basic functions of intercepting packets from the general flow of network traffic, processing the intercepted packets and potentially releasing the original packets and/or reinserting new or modified packets back into the general flow of network traffic. In general, it is the choice of which packets to intercept and the subsequent processing performed by each edge/packet intercepting device on the intercepted packets, e.g. the application, which distinguishes each device.

**[0126]** Referring now to FIG. **7**, there is shown a fourth embodiment of an edge adapter/packet interceptor system **700** which provides a scalable and reliable connection for multiple edge/packet interception devices to the routing equipment of the Internet Service Provider without introducing additional network latency or potential failure points to the packet flow with the addition of each such edge/packet interception device. It will be understood that each device may be implemented in hardware, software or a combination thereof. The edge adapter/packet interceptor system **700** decouples the interception of packets from the processing of those intercepted packets and provides a generic packet interception and pre-processing engine which can be utilized in parallel by multiple edge devices to implement their respective functionality/applications. As was noted above, the previously described embodiments can alternatively process packets which are forwarded to them by the ISP's or Carrier's routing equipment. The edge adapter/packet interceptor system **700** provides this interception and forwarding service. Further, the system **700** provides a standardized interface to a network such as the Internet for the connection of edge type or packet intercepting devices making it easier for an ISP or Carrier to offer the services/enhancements of many different providers, referred to as "managed services." In addition, the system **700** is capable of processing packets at, or in excess, of wire speed so as not to degrade network performance from the optimal. In one embodiment, the system **700** is selectively transparent to the network. Where the device is to be visible, it can be addressed just like any other device coupled with the network. However, this addressability may be disabled to make the device invisible to other network devices.

**[0127]** The system **700** may include a router **702** and a packet interceptor adapter **720** coupled with the router. The router **702** may be located within an ISP located at the edge of a network **100**, such as the Internet **100** as described above, or in a central office, peering point or metro node operated by a telecommunications carrier. Alternatively, the network **100** can be a private intranet or extranet as described above. Further, the network **100** may be an optical based network **100** or electrical, or combinations thereof. Exemplary routers **702** include: the Cisco 12000 Series GSR Internet router, manufactured by Cisco Systems, Inc., located in San Jose, Calif.; the Cisco 10000 Edge Services Router, manufactured by Cisco Systems, Inc., located in San Jose, Calif.; the Cisco 7500 Series router, manufactured by Cisco Systems, Inc., located in San Jose, Calif.; the Passport 8600 Routing Switch, manufactured by Nortel Networks, Inc., located in Saint John, Canada; the GRF MultiGigabit Router GRF 1600, manufactured by Lucent Technologies, Inc., located in Murray Hill, N.J.; and the M20, M40, and M160 Internet Backbone Routers, manufactured by Juniper Networks, Inc., located in Sunnyvale, Calif.

**[0128]** In the one embodiment, the adapter **720** may comprise a standalone device or an adapter card (also known as a "board" or "blade") inserted into the router's **702** expansion slot backplane or separate blade enclosure, as will be described In one embodiment, the adapter **720** implements the Intelligent Packet Architecture™ developed by CloudShield Technologies, Inc., located in San Jose, Calif. In one embodiment, the adapter **720** comprises the CS 2000 DPPM manufactured by CloudShield Technologies. Alternatively, the adapter **720** comprises the CS-2000 DPPM blade, also referred to as a DPI or PN 41 blade, developed by CloudShield Technologies for use with the IBM Blade Center enclosure, manufactured by IBM. The adapter **720** is coupled with the router **702** so as to be able to intercept packets **704** before they are routed by the router **702** over the network **100**. In alternative embodiments, the adapter **720** may comprise a stand alone device either coupled with the router **702** or coupled in line with the router **702** on the network **100**. In the latter case, the adapter **720** is capable of interfacing with the network **100**, whether optical or electrical.

**[0129]** The router **702** further includes a network interface **710**, a routing table **728** and routing logic **730**. As is known, and described above, packets **704** enter the router **702** from the network **100** via the network interface **710**. In normal operation, where there is no edge adapter **720** installed, the packet **704** would be routed to the next network **100** node by

the routing table **728** and routing logic **730** which analyze the destination internet protocol address of the packet **704** and determine where the packet **704** should be sent next within the network **100**. It will be appreciated that the routing logic **730** and routing table **728** can further implement policy based routing and quality of service protocols as are known in the art.

**[0130]** In one embodiment, the logical architecture of the packet interceptor adapter **720** includes a packet analyzer **712**, a buffer **714**, a rules processor **716** and an external device interface **718**. The edge adapter **720** may further include a management interface **722** and interfaces **734** for external devices **724**. The packet analyzer **712** is coupled with the network interface **710** of the router **702** so as to be able to intercept packets **704** before they can be routed by the routing logic **730** and routing table **728**, e.g. sent along to their intended destination. Further, the adapter **720** includes an interface **736** with the routing table **728** and routing logic **730** of the router **702** to send packets to be routed. This arrangement logically places the edge adapter **720** between the network interface **100** and the routing table **728** and routing logic **730**. In alternative embodiments, the routing table **728** and routing logic **730** of the router **702** can be configured to automatically forward all incoming packets out to the edge adapter **720** first and then route packets received from the edge adapter **720** as normal over the network **100**.

**[0131]** As packets **704** enter the router **702**, they are temporarily diverted to the packet analyzer **712** which determines whether or not the packet is to be intercepted. This determination is made in conjunction with the rules processor **716** by analyzing the header data **706** and application data **707** contained with the packet **704** according to pre-defined rules contained within the rules processor. As will be described in more detail below, if it is determined that the packet **704** is not to be intercepted, it is released to the routing logic **730** of the router **702** for normal routing. If the packet **704** is to be intercepted, it is stored in the buffer **714** for further processing and analysis by the rules processor **716** and interceptor/analyzer **712** or one or more of the external devices **724**.

**[0132]** Interception and subsequent processing of packets **704** is based on the application of rules to any of the various layers of data contained with the packet **704**. As is known in the art, the Internet utilizes the Transport Control Protocol/Internet Protocol ("TCP/IP") protocols to exchange information among connected clients and server computer systems. Further, it is known that the Internet supports several application protocols such as hypertext transfer protocol ("HTTP") or file transfer protocol ("FTP"). The ability of the Internet to support different application uses is based the concept of protocol "layering", also referred to as the layered protocol stack. Layering is the idea of designing several individual pieces of software, where each one performs one out of a set of functions, instead of designing one piece of software which performs all of the functions. Layering simplifies software development and reduces complexity.

**[0133]** In a layered software architecture, many different software components interface with one another to achieve the desired functionality, e.g. allowing a user to communicate over a network. A well known layered network software architecture has the following five layers:

**[0134]** Layer 5: Application Layer

**[0135]** Layer 4: Transport Layer

**[0136]** Layer 3: Routing Layer

**[0137]** Layer 2: Switching Layer

**[0138]** Layer 1: Interface Layer

**[0139]** The application layer or layer 5 comprises the particular application program that the user is running on their computer such as a web browser or a web server. The application layer can be thought of as interfacing between the transport layer and a sixth layer which is the end user. Users communicate with the application layer which in turn delivers/receives data to/from the transport layer. Many different applications can be operating at any given time. Particular applications are assigned port numbers or addresses which the transport layer uses to uniquely identify and communicate with the applications. Well known applications have fixed port addresses known as "well known ports." These ports are assigned by the Internet Assigned Numbers Authority (IANA).

**[0140]** The transport layer, layer 4, interfaces the user applications to the network infrastructure and structures the data for transmission by the routing layer. An exemplary transport layer is the Transport Control Protocol ("TCP") described above. TCP is a connection oriented protocol requiring the establishment of parameters for transmission prior to the exchange of data. For more information on the TCP protocol, see TRANSMISSION CONTROL PROTOCOL, DARPA INTERNET PROGRAM, PROTOCOL SPECIFICATION, September 1981, prepared for Defense Advanced Research Projects Agency, Information Processing Techniques Office by Information Sciences Institute, University of Southern California. As described above, the transport layer interfaces with particular applications using a port number or address.

**[0141]** The routing layer, layer 3, facilitates the delivery of data over the network and provides the logical network infrastructure which allows for network partitions or sub-networks, scalability, security and quality of service ("QoS"). An exemplary layer 3 protocol is the Internet Protocol ("IP") discussed above. The IP layer 3 protocol relies on IP addresses to route and deliver packets from their source to their destination.

**[0142]** The switching layer, layer 2, allows end station addressing and attachment. Layer 2 relies on unique Media Access Control ("MAC") addresses assigned to each computer connected to the network. The interface layer, layer 1, is responsible for device connectivity and usually refers to physical hardware/firmware which is used to build the physical network. Layers 1 and 2 are usually integrated and operate together. An exemplary layer 1 is provided by Ethernet type networks. Other layer 1 network hardware includes token ring or fiber optic based networks. The layer 1 physical network hardware provides a unique MAC address for use by layer 2. For example, every Ethernet interface card includes a unique Ethernet address built into it.

**[0143]** The software which implements each layer only has to know how to interface with its adjacent layers, i.e. the application layer only has to know how to interact with the user and the transport layer. This, for example, alleviates the need for a web browser to know how to communicate over all of the various types of physical network hardware (layers 1 and 2) that could be attached to the particular computer. For example, the web browser program, Internet Explorer™, manufactured by Microsoft Corporation, located in Redmond, Wash., does not need to know whether a user is connected to the Internet via local area network or a modem. The routing, switching and interface layers handle this.

**[0144]** In practice, the user communicates with the application layer which generates application data to be sent to a destination. For example, the user enters a Uniform Resource Locator ("URL") into his web browser. The URL identifies a particular world wide web page to be retrieved from a particular web server computer. The web browser then generates a request to that web server for the desired web page, known as a "GET" request. This application data, in this case the URL and the request command, is passed to the transport layer. The transport layer breaks the data down into one or more packets which can be sent over the network. A packet is the unit of data which can be transferred over the network infrastructure and is discussed in more detail below. The transport layer figures out how many packets are needed, and organizes and identifies them so they can be reassembled at the destination. In the case of a URL, only one packet may be necessary to contain the data. The transport layer then passes each packet to the routing layer. The routing layer adds a source and destination address to each packet and hands the packet off to the switching layer. The switching layer in combination with the interface layer transmits the packet onto the network. Once on the network, network hardware such as routers and switches route and direct the packet to the proper destination based on the IP and MAC addresses.

**[0145]** At the destination, as each packet is received, the interface and switching layers pull them off the network hardware based on the MAC address and hand them up to the routing layer. The routing layer ensures that the particular packet has reached the right IP address and then passes the packet up to the transport layer. The transport layer receives and assembles all of the packets. If any packets are missing (due to a network error for example), the transport layer re-requests the missing packet from the source by generating a special request packet. Once the application data has been received and assembled, it is passed up to the application layer. For example, the destination may be a web server, within or external to the device, which receives the URL and request command for further processing.

**[0146]** Notice that the routing, switching and interface layers, as used with the IP protocol, implement a connectionless protocol. These three layers do not guarantee delivery of a packet or set of packets or guarantee how (i.e., over what route or in what order) or when those packets will arrive. They perform a specific function of attempting to deliver a given packet to its intended destination. It is up to the transport layer to make sure that the overall communication is successful.

**[0147]** Another layered architecture which defines seven different layers is the Open Systems Interconnect ("OSI") model. These layers include the application layer, the presentation layer, the session layer, the transport layer, the network layer, the data-link layer and the physical later. For more information on layered network architectures, see Layer 3 Switching, An Introduction, 3-Com Technical Papers, published by 3-Com Corporation, Santa Clara, Calif.

**[0148]** As mentioned above, the transport layer breaks the application data down into packets. The routing layer then attempts to deliver each packet to its destination. A packet is the unit of data upon which the routing layer, layer 3, operates. Packet switching is the scheme by which the packets are routed and delivered to their destination. A packet also logically comprises layers which correspond to the layers of the software architecture described above. In reality, each layer of the packet is really the pieces of information added by each of the software layers as the packet is passed along.

**[0149]** A packet can also logically be thought of as having two distinct layers or parts, the application data and the header data. The application data is the data provided by the application layer, layer 5, as broken down by the transport layer, layer 4, for transmission. This may also be referred to as the "payload". This may be a URL, part of a web page, part of an email, part of a telnet terminal communications, part of a FTP file transfer, etc. The header layer comprises all of the other addressing information provided by layers 1-4 which is used to get the packet from its source application to its destination application. This includes the TCP port address (layer 4), packet sequencing data (layer 4), IP addresses of the source and destination computers (layer 3) and the MAC address (layers 2 and 1). While the above layering architecture and packet structure are more prevalent, one of ordinary skill in the art will appreciate that there are many different known network architectures and software models which can be used with the disclosed embodiments, such as the User Datagram Protocol ("UDP") which is similar to TCP and transmits datagrams.

**[0150]** Packets are delivered to their destination over the network by routers and switches. These devices access the different layers within the packet to determine where to send the packet. A switch is usually associated with layer 2. A switch reads the layer 2, MAC address, from the packet and delivers the packet directly to the correct device. If the switch determines that the device with the correct MAC address is not connected to it, then the switch delivers the packet to another switch and so on until the packet is delivered to its intended destination.

**[0151]** A router is usually associated with layer 3. A router reads the layer 3 IP address of the destination from the packet and, as described above, determines the route, and specifically the next adjacent network point to which the packet should be sent. Routers typically require routing logic which is programmed with knowledge of the network and knows how to determine the route over which to send a particular packet. This routing logic typically includes a routing table which identifies the routes for particular IP addresses. Many routers also factor in network usage information so as to route packets over less congested routes. A router ultimately delivers the packet to a switch which delivers the packet to its final destination. In some cases, a router and switch may be combined. A router may also be used as a firewall or proxy server (reverse or forward), blocking and/or re-routing packets based on their source and/or destination IP addresses.

**[0152]** Referring back to FIG. **7**, all packets **704** which are flowing through the particular network node implemented by the router **702** first flow through the packet analyzer **720**. Each packet **704** is stored in the buffer **714** for processing by the rules processor **716** and packet analyzer **720**. While the processing of a single packet **704** is generally described, it will be appreciated that multiple packets **704** may be buffered and processed substantially simultaneously as described below, such as to improve throughput. The rules processor **716** contains one or more rule sets **726** which are used by the packet analyzer **720**. Each rule set **726** contains one or more rules **732** which are applied by the packet analyzer to the buffered packet(s) **704**. Essentially, each rule **732**, described in more detail below, consists of a function and an action to be taken based on the results of the evaluation of the function. The function may involve analysis or examination of one or more portions of the packet(s) **704**, and typically comprises a comparison operation which compares one or more portions of

the packet(s) **704** with one or more pre-defined values to determine whether or not the associated action should be taken. The packet analyzer **720** is capable of analyzing or examining any part of the packet(s) **704**, including any data from the header data layer **706** or application data layer **708** (including all 5 or 7 layers as described above). For example, one rule **732** may be to compare the port address from the header data layer **706** to a value of 80 to determine if this is an HTTP packet. Further, the rule set **726** may contain several rules which compare different parts of the packet(s) **704** to different values, in effect creating a compound function. An example would be to determine not only that a particular packet **704** is an HTTP packet but also to then determine the URL contained within the application data layer **708**. In addition, a function of a rule **732** may also use the result of another rule **732** in its rule set **726** or another rule set **726** as an input to be evaluated. In addition, state information representing the analysis of past packets may be stored and used by rules **732** to analyze future packets. This functionality, for example, may be used to monitor for sequences of particular packets **704** flowing over the network **100**.

**[0153]** Once the function of a rule **732** has been processed/evaluated, the packet analyzer **720** will take the desired course of action or actions as dictated by the rule **732**. The packer analyzer **720** is capable of taking several basic actions independently or in combination. Further, these actions may be implemented as part of a rule or separately implemented and triggered via an external command from the management interface **722** or from one or more of the external devices **724**. The basic actions that the packet analyzer **720** can take include: capturing a packet to the buffer **714** for further operation; releasing the buffered packet **704** to the routing logic **730**; forwarding a copy of the buffered packet **704** to one or more of the external devices **724** (described in more detail below); deleting the buffered packet **704** from the buffer **714**; modifying the buffered packet **704**; and replacing the buffered packet **704** with a new packet(s), which may be received from one of the external devices **724**. In addition to or, alternatively, instead of taking these basic actions, the packet analyzer **720** may log or otherwise store information about the packet, including storing a copy of the packet itself. This log may be used for subsequent processing/analysis of other packets or for reporting purposes. As can be seen, one or more of these basic actions can be combined with others to create compound actions to be taken on a given packet **704**. For example, a compound action could include capturing a given packet **704** which satisfied the operation of a particular rule **732**, forwarding a copy of the captured packet **704** to one of the external devices **724** for further processing, and in response to a command received from that external device **724** (as determined by its own processing of the copy of the packet **704**), modifying the IP address and payload of the captured packet **704** and releasing the modified packet **704** to the routing logic **730** of the router **702**. It will be appreciated that such complex actions and compound operations can be directly implemented as opposed to being implemented via a combination of basic actions.

**[0154]** In addition, data about the packet **704** may be stored in a memory for use by other rules, for processing the current or future packets **704**. This allows stateful processing, i.e. state based rules, of packets **704** as they flow through the packet analyzer **720**. By storing information about past packet **704** activity that the packet analyzer **720** has processed, rules **732** may be implemented which take into account historical packet activity. An additional basic operation of the packet analyzer **720** is provided for storing a one or more attributes, or an entire copy, of the captured packet(s) in a state memory. For example, a rule **732** may defined to watch for multiple malformed packets **704**. Where a single malformed packet **704** is received, the rule **732** will take no action as this may be due to a random network error. However, data regarding that malformed packet, or the entire packet itself, will be stored. If another malformed packet **704**, similar to the first malformed packet **704**, is subsequently received, the rule **732** may determine that some malicious activity is underway and delete the second packet **704**. Other state information may also be recorded such as a time stamp. This allows the memory to be periodically purged, or alternatively, allows the rule **732** to take into account the frequency of occurrence, etc.

**[0155]** The packet analyzer **720** is fully programmable and rules **732** must be defined for each desired action and contingency. If no rules are defined for a particular contingency, the packet analyzer **720** will take the default action of releasing the packet. In this way, an unprogrammed device will not impede network traffic. For example, where a given packet **704** fails to trigger any rules **732**, that packet **704** can be automatically released to the routing logic **730** of the router **702** through the operation of a default action. In one embodiment, the default action is part of a default rule **732**, such as a rule **732** which has an evaluation function which always triggers the associated action. In this way, packets **704**, for which the packet analyzer **720** or no external device **724** wishes to intercept are simply released to the routing logic **703** for routing as normal. In an alternate embodiment, an unprogrammed packet analyzer **720** will take no action including not releasing the packet **704**.

**[0156]** Note that depending upon the implementation of the adapter **720**, the basic operations may be implemented in a different fashion. For example, if the packet analyzer **720** automatically captures every packet **704** which flows through the device **720** to the buffer **714**, then a capture packet operation may not be necessary. However, in this situation, a release packet operation may be necessary to actively release unwanted packets **704**. In alternative embodiments, the packet analyzer **720** may implement an in-line filtering function which eliminates the need to capture a given packet **704** to the buffer **714** for initial analysis. In this case, a capture packet action may be required to tell the packet analyzer **720** to capture the packet **704** to the buffer **714** for subsequent analysis and processing. Further, then, the packet analyzer **720** does not need to actively release unwanted packets **704**. However, a release packet action may still be necessary to release those packets **704** which are captured to the buffer **714**.

**[0157]** As described above, the rules processor **716** may comprises multiple rule sets **726** and rules **732**. Some rule sets **726** and their rules **732** may be defined by the external devices **724** coupled with the edge/packet interception device **720**. For example, one external device **724** may want to intercept DNS packets and will define a rule set **726** to implement that function. Another external device may want to monitor and copy all HTTP requests to a particular IP address and will define a rule set **726** to implement that function. Other rules sets **726** may be standardized and provided as standard functions, such as in a library. Still other rule sets **726** may be defined by an external device **724** but can be entirely processed by the rules processor **716**. These rule sets **726** and rules **732** may be redefined or reset dynamically by the rules

processor **716** or the external devices **724**, as needed, to implement their desired functionality. Further, the rule sets **726** and rules **732** may be re-defined or reset via the management interface **722**. Rule sets **726** may also implement security or authentication to prevent one external device **724** from interfering with the operation or security of another external device **724**. The rules processor **716** interfaces with the external devices **724** and the management interface to enable definition and modification/re-definition of rules **732** and rule sets **726** both statically and dynamically.

**[0158]** The external device interface **718** couples the adapter **720** with one or more external devices **724**. The interface **718** provides the hardware and software connection to pass data back and forth between the packet analyzer **712** and rules processor **716** and the external devices **724**. This data includes commands to the adapter **720**, such as to release a buffered packet **704**, modify a buffered packet **704** or to redefine one or more of the rules **732** or rule sets **726** in the rules processor **716**. In addition, the data includes packets to be delivered to the routing logic **730** of the router **702** for routing onto the network **100**, in addition to, or to replace, the packet presently held in the buffer **714**. Further the data can include copies of buffered packets **704** from the packet analyzer **712** sent to one or more of the external devices **724** in response to the action of one or more rules **732**. The interface **718** further implements the parallel connection of multiple external devices **724** to the network **100** so that each device **724** does not increase the overall network **100** latency. The interface **718** may also implement arbitration schemes so that each external device **724** can implement its particular application in an efficient manner and without interference from the other external devices **724**. In one embodiment, up to eight external devices may be coupled with the adapter **720** via the interface **718**, although alternative embodiments may support fewer or more devices. In one embodiment, all packet processing is handled within the adapter **720** and no external device interface **718** is provided.

**[0159]** Referring now to FIG. **8**, there is shown a more detailed block diagram **800** of the adapter **720** from FIG. **7**. As described above, the adapter **720** may be implemented as a standalone device, an adapter card/board/blade which is inserted into a router's **702** backplane interface or an adapter card/board/blade which is inserted into blade enclosure and coupled with the ISP or Carrier's routing mechanism. Further, in one embodiment the adapter card comprises a management controller **832** and four adapter daughter cards **802**, each daughter card providing, for example, two external device **724** interfaces **836**. Further, a bridge device **820** may be provided to interface each of the daughter cards **802** with the management controller **832** and a router interface **834** which couples each of the daughter cards **802** with the router **702** backplane.

**[0160]** The management controller **832** may comprise an external interface **838** coupled with a processor **842** and memory **840**. The external interface **838** may be an 82559 100 megabit Ethernet interface, manufactured by Intel Corporation, located in Santa Clara, Calif. It will be appreciated that other external interface technologies may also be used such as serial, parallel, coaxial and fiber optic based interfaces. The external interface **838** further comprises a VMS747 Security/Cryptographic Processor, manufactured by Philips Semiconductors, Inc., located in the Netherlands for security. The external interface **838** interfaces the management controller **832** with an external management device (not shown) for controlling and managing the adapter **720** via interface **846** which may be a 100 megabit Ethernet interface. The external management device may be a 808x compatible desktop computer including a Pentium Class processor such as a Pentium III processor manufactured by Intel Corporation in Santa Clara, Calif., 32 megabytes of RAM, 6 gigabytes of hard disk space and an Ethernet interface. It will be appreciated that such desktop computer systems are well known. In alternative embodiments, the external management device can be locally or remotely located with respect to the adapter **720**. The processor **842** may be a StrongArm™ control processor manufactured by Intel Corporation located Santa Clara, Calif. The processor **842** is coupled with memory **840** which may comprise both 16 megabytes of Synchronous Dynamic Random Access Memory as working storage and 32 megabytes of non-volatile (Flash or Static RAM) storage for firmware and back-up storage. The processor **742** interfaces the management controller **732** with the four daughter cards **802** using a standard Personal Computer Interface ("PCI") compliant bus **844** and bridge logic **820**. Alternatively, the Compact Personal Computer Interface ("CPCI") may be used.

**[0161]** Each daughter card **802** includes a network processor **804**, bulk data storage **806**, an external device **724** interface controller **808**, a memory interface **814**, a classification co-processor **810**, non-volatile storage **812**, and a content addressable memory **816**. The network processor **804** may be an IXP1200 Network Processor, manufactured by Intel Corporation, located in Santa Clara, Calif. The network processor **804** includes six micro-engines (not shown) which handle buffering and processing packets as will be described. The network processor **804** is coupled with the PCI bus **830** which interfaces the daughter card **802** with the PCI bridge logic **820** which in turn links all of the daughter cards **802** together and with the management controller **832**. The network processor is also coupled with the bulk data storage **806**, which is which may include 8 megabytes of Synchronous Dynamic Random Access Memory (SDRAM), via a 64 bit. 83 MHz bi-directional (166 MHz total) SDRAM bus. The bulk data storage **806** is used to store the operating software for the network processor **804**, the buffered packets undergoing processing as well as the rules and rule sets as will be described below.

**[0162]** The network processor **804** is further coupled with the external device **724** interface controller via a 64 bit. 66 MHz bi-directional (132 MHz total) IX bus **826**. The external device **724** interface controller may be an IXF1002 Dual Port Gigabit Ethernet MAC, manufactured by Level One™, Inc., located in Sacramento, Calif., a subsidiary of Intel Corp., located in Santa Clara, Calif. The external device **724** interface controller interfaces with the external devices **724** using gigabit optical transceiver interfaces **836**.

**[0163]** In addition, the IX bus **826** also interconnects the four daughter cards **802** with the router backplane (not shown) via the router interface **834**. The interface **834** may comprise a Quad IXA field programmable gate array, manufactured by Xilinx located in San Jose, Calif., which controls cross communications between the daughter cards **802** and the traffic gating to the router backplane. Further, the router interface **834** may include the router switch fabric interface to interconnect the adapter **720** with the router backplane.

**[0164]** The classification co-processor **810** may comprise a ClassiPI™ Classification Co-processor, manufactured by SwitchON Networks, Inc., located in Milpitas, Calif. The non-volatile storage **812** may comprise 32 megabytes of Flash memory or Static RAM or other non-volatile storage as

is known in the art. The content addressable memory **816** may comprise a NetLogic IPCAM® Ternary CAM Ternary Content Addressable Memory, manufactured by NetLogic Microsystems, Inc., located in Mountain View, Calif. The classification co-processor **810**, the non-volatile storage **812** and the content addressable memory **816** are all coupled with the memory interface **814** via memory busses **818**, **820** and **822**. The memory interface **814** may be a field programmable gate array device implementing glue logic and clocking signals for the non-volatile memory **812**. The memory interface **814** further couples the classification co-processor **810**, the non-volatile storage **812** and the content addressable memory **816** with the network processor **804** via a 32 bit 83 MHz bi-directional (166 MHz) Static RAM memory bus **824**.

**[0165]** The non-volatile memory **812** is used to store the operating software, including the operating system and custom microcode, for the adapter **800**. Upon boot up of the adapter **800**, this operating code is loaded into the bulk storage memory **806** from which it is executed. The non-volatile memory **812** is further used to store rules **832** and state level information used to restore previous system operation parameters when powering on. The classification co-processor **810** and content addressable memory **816** are used by the network processor **804** to offload specific rule processing tasks when it is more efficient to do so. In particular, processing of rules which involves table look ups or matching values to table entries is best handled by the content addressable memory **816**. Establishing packet type or other classifying operations are best handled by the classification co-processor **810**. As will be described below in more detail, the operating code of the network processor **804** is pre-programmed to cause the network processor **804** to offload certain processing functions to the classification co-processor **810** or the content addressable memory **816** when those devices can perform the particular function more quickly and efficiently than the network processor **804** can. It will be appreciated that other application or function specific processing devices may be included to more efficiently process particular functions of the adapter **800**. Such devices may include: a CryptoSwift™ cryptographic processor, manufactured by Rainbow Technologies Products, Inc. located in Irvine, Calif.; a C-5™ Digital Communications Processor, manufactured by C-Port, Inc., located in North Andover, Mass., a subsidiary of Motorola, Inc., located in Schaumburg, Ill.; a NetLogic Policy Co-Processor™ Packet Classification Engine, manufactured by NetLogic Microsystems, Inc., located in Mountain View, Calif.; a NetLogic CIDR Co-Processor™ Longest Prefix Match Engine, manufactured by NetLogic Microsystems, Inc., located in Mountain View, Calif.; a NetLogic IPCAM® Ternary CAM Ternary Content Addressable Memory, manufactured by NetLogic Microsystems, Inc., located in Mountain View, Calif.; a NetLogic SyncCAM® Binary CAM Binary Content Addressable Memory, manufactured by NetLogic Microsystems, Inc., located in Mountain View, Calif.; or a NetLogic NCAM™ Binary CAM Binary Content Addressable Memory, manufactured by NetLogic Microsystems, Inc., located in Mountain View, Calif.

**[0166]** It will be appreciated that the preferred components are known in the art and that suitable substitutes which implement the same functionality may be used. Further, the disclosed packet interceptor adapter may also be embodied in an alternative physical architecture such as a single board design, or an adapter box external to the router.

**[0167]** Generic operation of the packet interceptor adapter **720** is as follows: A packet is intercepted by the packet analyzer **712**/**804**. Framers on the router interface **834** capture the packet and forward it to the network processor **804**. Framers are protocol specific devices which understand the network protocol in use, such as Ethernet or Asynchronous Transfer Mode ("ATM"), and which are capable of isolating packets from the raw communications stream and extracting the actual packet contents.

**[0168]** The packet is buffered in buffer **714**/**806**. The network processor **804** places the intercepted packet into the bulk data storage **806** and creates and stores a packet information block ("PIB") which contains parameters of the packet for efficient reference. These parameters include the source and destination addresses, length and other packet specific data as well as the address within the SDRAM **806** where the packet is buffered/stored. The network processor **804** further creates a pointer to the packet information block in a queue which lists packets ready for further processing. In one embodiment, the network processor **804** includes six micro-engines as described above. Two of these micro-engines are designated masters and the remaining four are designated as slaves. As packets enter the adapter **800**, one of the two master micro-engines, depending upon availability, buffers the packet to the SDRAM **806** and creates the PIB and pointer.

**[0169]** First level rules/sets are executed against the buffered packets. In one embodiment, the slave micro-engines, described above, when idle, continually check the queue of packets ready for further processing. When there is a pointer in the queue of a packet that is ready, the idle slave micro-engine dequeues the pointer entry for the packet and begins processing that packet according to the rules and rule sets programmed into the adapter **800**. In one embodiment, each rule set consist of a hierarchical tree of nodes which are logically linked together, where one or more nodes form a rule. Each tree begins with a root entry node where processing begins. Each node may be one of three types, data gathering, decision or action. Data gathering nodes retrieve data or other information about the current packet, about the current operating environment or about other packets which may be relevant to the current packet being processed and which have been stored for such reference. Data gathering nodes gather information to be used by decision nodes. Decision nodes perform a function utilizing the data gathered by the data gathering nodes such as a comparison function, an equality function, an inequality function, or some other mathematical and/or Boolean operation. An action node uses the result of the decision node to perform some operation on the packet. In one embodiment of the adapter **800**, the possible actions include releasing the current packet, copying the current packet and sending the copy to an external device via the external device interface **808**, or alternatively, sending the PIB or pointer, deleting the packet or modifying some or all of the packet and releasing it, or combination thereof. Each node specifies another node to which processing should continue when processing of the current node is complete. It will be appreciated that the node and tree structure is a logical data organization which may be implemented as a table of pointers or other construct as is known.

**[0170]** When processing a data gathering, decision or action node, the slave micro-engine may offload the processing to a co-processing element such as the classification co-processor **810** or the content addressable memory **816**. The

operating code of the slave micro-engine is pre-programmed to cause the micro-engine offload processing of specific node functions when that processing can be more efficiently completed with the other device. In this case, while the co-processing device is processing the particular node, the slave micro-engine either waits for processing to complete or begins processing another packet. In the latter case, when the co-processing device finishes its processing of the particular node, it can indicate that the packet requires further processing, for example by adding a pointer back to the ready for processing queue, so that a slave micro-engine will finish processing the packet.

**[0171]** Once a slave micro-engine has begun processing a packet, it must determine which rule set to enact upon the packet. In one embodiment, each rule set defines a set of one or more packet parameters which indicate to the slave micro-engine that the rule set is to be applied to the current packet. The slave micro-engine references the packet information block using the pointer to determine that the one or more packet parameters meet the rule set requirements. If so, then the slave micro-engine executes that rule set starting with the root node in the tree. If a particular packet triggers application of more than one rule set, the slave micro-engine processes the rule sets in a prioritized order. Alternatively, other execution schemes may be used such as round robin. In one embodiment, the slave micro-engine determines which rule set to execute based upon packet type, wherein only a single rule set is stored for each type of packet that may be intercepted. For example, FTP packets may trigger application of one rule set while HTTP packets may trigger application of a second rule set.

**[0172]** Each rule set/tree of nodes then consists of a set of data gathering, decision and action nodes which process the packet and take a particular course of action. In one embodiment, each rule set is constructed so as to make a quick initial determination on whether to hold or release the packet from the buffer. In this way, processing latency is reduced. Once the particular course of action has been taken with the packet, the slave micro-engine other rule sets, if any, on that packet or returns to polling the queue of packets ready for processing to pick up another packet for processing.

**[0173]** When an action node results in sending a copy of a packet out to an external device, no further action is taken on that packet until a response is received from the external device. In one embodiment, the slave micro-engine waits for a response from that external device before continuing processing. In an alternate embodiment, the slave micro-engine processes other packets while waiting. The response from the external device instructs the slave micro-engine on what further actions to take with the packet. Such further action includes deleting the packet, releasing the packet, or modifying the packet, or combinations thereof. In one embodiment, the external device may provide a substitute packet for the buffered packet to release, with the buffered packet being deleted. This substitute packet may be provided directly to the buffer **806** to overwrite the buffered packet. In yet another alternative embodiment, once the copy of the packet, the PIB or the pointer has been sent to the external device, the slave micro-engine is free to begin processing another packet. The external device then signals that it has completed its processing, such as by writing a packet pointer to the queue of packets ready for processing or some other flag indicating the further processing can take place on the buffered packet to complete the processing thereof.

**[0174]** Where a particular packet fails to trigger the application of any of the rule sets, default rules or actions may be provided for processing the packet, as discussed above. In the disclosed embodiments, the default rule/action consists only of the action of releasing the packet. In this way, packets which are not of interest are immediately released for normal routing.

**[0175]** In addition, the adapter **800** may receive commands from either one more of the external devices **836**, or the management interface **832**. In one embodiment, the adapter **800** authenticates any commands received to ensure they are from valid sources. Such commands include commands for adding, modifying or deleting a rule set, commands for providing an externally generated packet for release, or commands to delete, modify or release a packet currently in the buffer.

**[0176]** The specific operation of the packet interceptor adapter **720** executing denial of service protection application for malformed Internet Control Message Protocol ("ICMP") packets is as follows: Framers on the router interface **834** captures a packet and forwards to network processor **804**. An idle master micro-engine on the Network processor **804** stores packet in buffer/SDRAM **806** and creates PIB and pointer. The pointer put on the queue of packets ready for processing. An idle slave micro-engine checks the queue for packets to be processes and dequeues the packet pointer. The slave micro-engine executes a default application specific rule set. The first rule in the set checks the source IP address of the packet against a list of blocked IP addresses. This processing takes place in the content addressable memory **816** which is more efficient at processing this type of look-up function.

**[0177]** If the source IP address matches a blocked IP address stored in the content addressable memory **816**, the slave micro-engine deletes the packet from the buffer and processing ends for this packet. If the source IP address does not match a blocked IP address, the slave micro-engine determines the packet type by analyzing the packet header. If this packet is not an ICMP packet, the packet is released.

**[0178]** If the packet is an ICMP packet, the packet is sent to the classification co-processor **810** to check for proper packet construction. The classification co-processor **810** compares the construction of the buffered packet against a reference stored in the non-volatile memory **812**.

**[0179]** If the packet is determined to be malformed, the slave micro-engine is instructed to delete the packet and processing ends for this packet. In one embodiment, the IP address of malformed packet is added to a block list. In an alternate embodiment, the IP address is added to the block list only after the number of malformed packets received from this IP address exceeds a particular threshold. In still another embodiment, the receipt of one or more malformed packets raises an alert to a user for manual intervention to add the source IP address to the block list.

**[0180]** It will be appreciated that any device which intercepts and processes packets can utilize the packet interceptor adapter **720**. For example, devices which utilize the transport layer or layer 4 data to route packets to their destination or redirect them to alternate destinations are known. These devices attempt to learn the type of application data being carried by the packet based on the transport layer port address. As described above, well know applications utilize "well known ports." For example, HTTP data uses port 80, Telnet use port 23, FTP uses port 21 and domain name server

requests use port 53. This information can be used to redirect a particular packet to a server which can more optimally handle the packet. Utilizing the packet interceptor adapter **720**, such devices could define a rule to have the adapter intercept packets destined for a particular port number of a particular IP address. For those packets which are intercepted, the action taken could be to modify the destination IP address to an alternate destination and release the packet. This functionality could be completely implemented on the adapter **720** itself or the adapter **720** could forward copies of intercepted packets out to an external device which dynamically determines the modified IP destination address.

**[0181]** Another exemplary application of the packet interceptor adapter **720** is as web switch. A web switch is used to balance the load across multiple mirror servers at a particular web site. The adapter **720** is programmed with a rule to intercept packets directed to transport layer port 80 of the particular web site (based on the IP address). Knowing that these packets contain HTTP requests, the adapter can re-route the packet from an overloaded server to a server which has excess capacity, thereby balancing the load distribution. Again, this functionality can be implemented directly on the adapter **720** or in combination with an external device **724** which is monitoring and controlling the load distribution across the servers.

**[0182]** In one alternative embodiment, the adapter **800** provides no external interface **836** for external devices. In this embodiment, the adapter **800** intercepts packets and executes rule sets as described above. The rule sets may be developed and provided by third party developers for particular applications. The adapter then comprises a generic packet interceptor and processor.

**[0183]** In still another alternative embodiment, the adapter is configured as an application specific device with a defined rule set for implementing a specific application or set of applications. For example, the adapter is specifically configured to act as an anti-denial of service security device.

**[0184]** In an alternate implementation, the disclosed embodiments may themselves be implemented in a standardized environment to bridge between external devices **724**, as described above, and a common or standardized interface to the provider's infrastructure, e.g. the provider's router or routing logic, and thereby, the network **100**. This results in the decoupling of the interception of packets from the processing of those intercepted packets thereby providing a generic packet interception and pre-processing engine which can be utilized in parallel by multiple edge devices to transparently implement their respective functionality/applications.

**[0185]** In particular, the disclosed embodiments may be physically implemented as a "blade" or "blade server," as was described above, and connected via a rack mount arrangement referred to as a blade enclosure, such as the IBM Blade Center, manufactured by IBM Corporation, Sorrens, N.Y., which provides standardized power, cooling and connectivity for blade-implemented devices, such as blade servers, etc. The external devices **724** may also be implemented as blades inserted into the same, or a different, blade enclosure and interconnected thereby as will be described. Blade servers are self-contained computer servers, designed for high density deployment. Whereas a standard rack-mount server can exist with (at least) a power cord and network cable, blade servers have many components removed for space, power and other considerations while still having all the functional components to be considered a computer. A blade enclosure provides services such as power, cooling, networking, various interconnects and management-though different blade providers have differing principles around what should and should not be included in the blade itself (and sometimes in the enclosure altogether). Together these form the blade system.

**[0186]** In an exemplary standard server-rack configuration, 1 U (one rack unit, 19" wide and 1.75" tall) is the minimum possible size of any equipment. One principal benefit of, and the reason behind the push towards, blade computing is that components are no longer restricted to these minimum size requirements. The most common computer rack form-factor being 42 U high, this limits the number of discrete computer devices directly mounted in a rack to 42 components. Blades do not have this limitation; densities of 100 computers per rack and more may be achievable with current blade systems.

**[0187]** The exemplary implementation using the IBM BladeCenter system provides services delivery within the IBM BladeCenter HT Chassis leveraging adapters **800**, referred to as Deep Packet Processing Modules (DPPM), developed by CloudShield Technologies, such as the CloudShield Deep Packet Inspection ("DPI") Blade, also referred as the IBM PN41 Deep Packet Inspection ("DPI") Blade Server, which may include one or more DPPM's, available from the IBM Corporation. The identification of customer network traffic and coordination of services being applied to the traffic is one role of the DPI blade as a network processor. Other server blades may host the applications/services that will be served up to the customers on an as-provisioned basis, referred to as application servers. In an alternate embodiment, the DPI blade may host applications/services in addition to or in lieu of other server blades. These applications/services include, for example, firewall (e.g. Checkpoint Firewall-1), virtual private network, denial of service protection (e.g. Arbor TMS), intrusion prevention (e.g. IBM ISS Preventia IPS), anti-spam and/or anti-spyware applications. A DPI blade or server blade may also play the role of a content processor whose functionality is more limited to heavy lifting and deep inspection of traffic often as a co-processor or subordinate role to an application server or network processor.

**[0188]** The implementation provides a resilient, scalable framework to add new services via a software provisioning event, i.e. transparently without requiring reconfiguration of the providers physical or logical infrastructure, while also enabling customer based provisioning to have a dynamic impact on the per customer and/or per device service delivery. From a transport perspective the system may be transparent on both ends, the service provider infrastructure as well as to the application servers providing the services. This allows a service provider to insert the chassis, or cluster of chassis', into the network without impacting the Layer 2 or 3 delivery structure as if the services were transparent or not even present. Application servers are further able to leverage existing products in their native form without modification. For example, an enterprise firewall may be deployed in a carrier environment on an application server without change as the disclosed embodiments make it transparent to the network yet allow the firewall to act as a gateway as it normally would. To enable increased features for enterprise class applications, virtual machine technology can be introduced to provide simplified migration, high availability and maximize resource utilization.

**[0189]** The CloudShield DPI blade acts as a network processing line card and together or separately as a deep packet

inspection content processing blade. These blades look at all traffic that arrives at the chassis, determine which was for customers or services within the chassis and which are for other systems. Traffic for a specific customer being serviced would be sent to the appropriate customer's applications housed on an application server. Network layer transport manipulation would be utilized to appropriately deliver a customer's traffic to their associated processing element, customer specific rule set as well as support high-availability and fault tolerant fail-over scenarios. When multiple services are applied, coordination of the order of services is manages such that response traffic goes through services in the opposite order of requests.

**[0190]** As scalability demands increase, greater amounts of processing time or multiple server blades can be leveraged for a given customer's traffic. When virtualization technology is used on the application servers, as a failure occurs, virtual machines can be migrated to alternative server blades and the network devices can dynamically re-route traffic to the new customer processing location. As more customers are provisioned to the system, the traffic can be selected based upon newly provisioned policies to be sent to the appropriate processing element. Leveraging the ability to identify traffic as belonging to a customer at the application layer and performing modification of the packets within the chassis to provide internal BladeCenter address translation, applications can be deployed without unique tailoring for each customer beyond what they wish to configure. This mechanism provides for mobility, fault tolerance and resiliency as well as scalability.

**[0191]** As was described above, the DPI blade, provides multi-gigabit, multi-function, programmable, deep packet inspection. Inspecting, processing, and modifying packet contents at high speeds without noticeable latency provides capabilities for handling application layer threats, and the text-based protocols of Voice, Video and Data services. Coupled with packet operations scripting language, the DPI blade enables network operators to deploy traffic treatment algorithms of their own design allowing them to differentiate service offerings, or develop classified solutions for protecting national infrastructures. These capabilities further enable content monitoring and control, and security applications to be performed on even small packet sizes, and enable entirely new classes of applications and services.

**[0192]** The DPI blade, having one or more DPPM's, may scale in clusters as well as individual systems processing from 2 Gbps up to 5 Gbps per DPPM, and offer, for example, 10/100 Ethernet, Gigabit Ethernet and OC-3/12/OC-48 SONET/SDH interfaces. 10 Gbps Interfaces and enhanced clustering capabilities (referred to as Traffic Control System in this document) may be further provided to enable scalable processing in the 10's of Gigabits per second ranges without change to existing applications. Future processor sub-systems may increase the layer 7 processing ability in similar form factors.

**[0193]** As described above, the DPPM is architected to feed input rates up to 10 Gbps to Packet Buffer Memory for content analysis. Analysis occurs in place (a zero copy architecture) based upon flexible logic (RAVE™ code) provisioned to the system that leverages content analysis functions to assess and maintain state information in a relational database implemented in silicon (Silicon Database). The system can operate at a packet level as well as session level with stream reassembly capabilities (Stream Processing Accelerator) in the data plane.

**[0194]** In one embodiment, the DPPM includes, for example, a combination of Network Processors (Intel IXP28xx or Netronome NFP 32xx manufactured by Netronome Inc., Cranberry Twp, Pa.), CloudShield Processors (Xilinx Virtex II Pro, Virtex 5 or Virtex 6 FPGAs), Content Processors (IDT PAX.Port 2500 or LSI T1000 processor manufactured by LSI Corp., located in Milpitas, Calif.), Silicon Database Memory (Netlogic 18 Mb T-CAM, 512 MB DRAM) plus Stream and Packet Memory (768 MB RDRAM). In addition a slew of support chips such as Intel Framers, Health Management & SONET Overhead Controllers (FPGA/CPLD), General Purpose Memory (QDRSRAM, ZBTSRAM) and Management Network GigE Switches among other devices are utilized to create the motherboard for a network content processing architecture. An operating system software, such as the CloudShield Packet Operating System ("CPOS™"), may be provided, such as a run-time operating system that orchestrates DPPM platform data plane resources to perform the packet operations (packet read, table lookup, string search, variable update, packet capture, packet write, etc.) called within applications, such as RAVE™ applications.

**[0195]** With respect to operations, there are at least two aspects of a DPPM, such as the adapter **800** described above, which may be considered. First is the streaming side of the device which includes the data path of packets in and out of the DPPM as well as to content processors and packet storage areas. In one embodiment, these pathways may be designed using 12.8 Gbps bus technology (SPI-4.2) to move traffic from network interfaces in and to a packet buffer storage. These packet buffers may use three RDRAM banks each operating at 12.8 Gbps as a single large striped memory array. On top of this high speed foundation is overlayed the network intelligence. Network intelligence may come in several flavors to map to the types of processing required. At the baseline, there is layer 2 through 7 packet dissection, checksum validation & recalculation and switching which occurs at bus rates (packet analysis at >10 Gbps all packet sizes). The second layer is packet buffering and delivery to content analysis engines. Stream buffers (where multiple packets can be assembled into an application layer message) reside in the RDRAM as well and are able to maintain storage of packets, copying of packets to and from stream buffers plus transmission external at line rate. In addition, unstructured content analysis (e.g. POSIX Regular Expression Analysis—REGEX) is done by streaming selected data from packet or stream buffers to pattern analysis engines accessible on the SPI-4.2 bus. REGEX is able to sustain between 4 and 5 Gbps per blade with custom response processor removing the overhead of return traffic on the SPI-4.2 bus. The usage of these of these buses and access rates per packet is controlled by the application. The last level of processing is the logical application processing. Systems may be currently tuned for a balance of processing and analysis such that a sustained 2 to 4 Gbps is generally achieved in the layer 7 analysis by combining algorithms and application logic, unstructured content analysis, state management and statistics storage. RAVE™ is one example of a network processing language, developed by CloudShield Technologies, Inc., designed for developing applications (or policies) that operate in the data plane. It is abstracted from the hardware, however, tuned for high speed content analysis. Generally engines are developed in RAVE™ with data driven user based provisioning of features coming from out of band OSS systems.

**[0196]** The disclosed embodiments may be used for extreme processing cases where every packet is interrogated at layer 7. This generally includes inspection, analysis and manipulation. This has focused processing around driving all traffic to deep packet processing logic developed in RAVE™ with tuning to maximize the amount of packets processed per blade at layer 7.

**[0197]** In 10 Gbps market scenarios where a given network interface is 10 Gbps and possibly heavily utilized, processing can become difficult to achieve without negatively impacting the network. In this environment, it becomes important that a system can analyze all traffic at wire speed, for example, categorizing the traffic into one of three buckets, namely traffic not of interest, traffic that may be of interest and traffic known to require specific processing. Traffic not of interest can be redirected (directly or indirectly switched), traffic potentially of interest can be passed along for further layer 2 through 7 analysis in a RAVE™ subsystem of a DPPM and traffic known to be of interest can be processed on a DPPM or other device (such as a server blade) awaiting the traffic. Of importance in this scenario is to make sure that traffic can be directed at each level in accordance with the processing ability of the next stage of processing.

**[0198]** In one embodiment, flow control may be implemented using a RAVE™ application. Upon ingress of packets to the RAVE™ flow control application, the application analyzes the traffic for customer identification and determination of interest in the flow, identifies services to apply and performs header storage and transformation, and tabulates billing metrics and services tracking data for reporting systems. Coordination of re-routing for failover situations may also be implemented.

**[0199]** The packets then may be routed to the application server via a fabric interface controller which may remove or envelope internal headers and transmit traffic onto the appropriate 10 GbE backplane switch fabric. Once the application servers finish processing, the packets may be received therefrom via the fabric interface controller which receives traffic from the 10 GbE backplane switch fabric interface, inspects the traffic and sends it to the appropriate next destination.

**[0200]** Traffic may then egress the Rave™ flow control application whereby the application restores the customer's packet headers and frees storage as appropriate, analyzes custom packets for table management and generates and maintains per-subscriber and per-service Billing/Reporting counters.

**[0201]** Solution deployments come down to picking the appropriate traffic to process at layer 7 within the device. FIGS. **10** and **11** show the logical and physical breakout of an exemplary Gigabit Ethernet DPPM. In this standard configuration, the focus is to bring all traffic from the interfaces (up to 5 GigE) into Packet Buffers and then apply layer 2 through 7 processing. The exemplary DPPM, performing wirespeed 10 Gbps layer 2 through 7 classifications, may be capable of making decisions on which traffic to send locally for processing, distribute to other DPPMs for processing or pass directly on to an alternate processing devices. In the exemplary 10 Gbps DPPM design, a line rate Traffic Control System is integrated into the Network Interface Module allowing full 10 Gbps classification to occur and appropriately determine and direct where to process. This enables either direct load balancing to external devices (optically or via fabric), content based routing and selective application layer processing within a 10 Gbps stream and clustering of layer 2 through 7 processing for intensive applications where both data rate and number of applications must be scaled. Line rate 10 Gbps is able to be sustained and scaling of processing is separated from network rate and content distribution within the traffic streams, assuming that at some point more applications will be applied to a given stream than can be processed within a single resource module thereby requiring scalability and clustering.

**[0202]** FIGS. **12** and **13** show the logical architecture of an exemplary Traffic Control System integrated with the 10 Gbps Network Interface Module (NIM) of the exemplary DPPM **800**. A single 10 GbE XFP plus a single RJ-45 GbE interface comes into the DPPM to the device. In both cases the Framer is instantiated within the Virtex II Pro FPGA. The Layer 2 through 7 classification and checksum management system remains as implemented in other disclosed Gigabit Ethernet DPPM modules operating at 10 Gbps input and output. FIG. **13** shows the logical architecture of the Traffic Control System (TCS). The TCS analyzes the 7-tuple described later in the appendices. Important to note is that since some traffic may not go to the local RAVE™ processing subsystem, the layer 2 through 4 traffic statistics are tracked within the TCS and forwarded to the Silicon Database automatically by the system. Traffic analysis can result in filtering, switching as well as layer 2 re-writing for indirect switching. Locally the TCS may direct traffic to the local 10G or 1G interface, local RAVE™ processor or destinations across the Fabric interface which may be a remote RAVE™ processor or any physical or Ethernet destination remote to the Fabric. In a CS-2000 with (2) DPPM blades the fabric connects each DPPM direct to the peer DPPM. In an IBM BladeCenter implementation, a fabric switch on the DPPM may be implemented that ties to the DPPM Rocket IO interfaces, as shown FIGS. **12** and **13**, and to the (4) 10 GbE interfaces on the backplane.

**[0203]** FIG. **14** shows a block diagram of the IBM BladeCenter variant of the exemplary DPPM. In one embodiment, the DPPM will be integrated within the IBM BladeCenter chassis as a processor blade, fitting into the same slots where blade servers will occupy. DPPM's shall be interchangeable with blade servers fitting in any of the 14 slots on an H chassis or 12 slots on an HT chassis. The functionality of CloudShield CS-2000's application server module ("ASM") may be ported to operate on an existing IBM blade server. The hardware management functionality built onto ASM and DPPM blades may be integrated with the existing IBM BladeCenter chassis management systems such that DPPMs can be managed as if they were a blade server for traditional information and via IBM's IPMI interfaces for DPPM specific information. The DPPM blades will have one XFP based 10 GbE interface and on RJ-45 GigE interface on the front faceplate. Standard Gigabit Ethernet pathways will be used internally for management and high speed 10 GbE interfaces internally will be used for fabrics interconnect. There may be four high speed fabric interfaces on the backplane of a blade. There may be up to four high speed switches able to be inserted into the chassis. The intent is that traffic will come into a DPPM and initially be processed at 10 Gbps by the Traffic Control System. Packets may immediately exit the chassis or be directed either to other DPPM blades or blade servers. To separate data plane processing from server processing, high speed switch fabrics may be separated between those that are used to interconnect the DPPMs and those that are used to connect the DPPMs to the blade servers. This

architecture may remove traffic not being processed from the chassis from the high speed switch as well as provide secure separation of network processing from application layer processing since a CloudShield DPPM could be the bridge between two high speed switching domains.

**[0204]** In one embodiment, a CloudShield DPPM may be embedded within the IBM BladeCenter with 10 Gigabit Ethernet switch fabric connectivity built into the BladeCenter.

**[0205]** The CloudShield DPPM is connected to the ingress and egress interfaces for the network and may be responsible for processing all network traffic arriving or leaving the chassis to and from the service provider network. An application, written in CloudShield's in-networking computing data plane programming language, known as "RAVE™," may be responsible for determining the customer and directing the traffic to the application server(s) using network layer modifications, generally comprising Layer 2 and Layer 3 Ethernet.

**[0206]** As was described above, application software may be loaded onto blades servers such that they can operate as applications server that provide revenue bearing services on behalf of a service provider's customer, such as antivirus services, anti-spam services, intrusion protection services, etc. This software may be of an enterprise application type which takes over an entire blade and has no notion of customers, or may be one that stores a different policy per customer. In some cases this software may be transparently bridging network interfaces of the blade server while other software may act as gateways or responding targets on a single interface. Furthermore, tools such as VMWare may be loaded on these application servers such that different services or different instances per customer may be loaded in each virtual machine ("VM").

**[0207]** An example implementation of the architecture may leverage the VMWare ESX Server provisioned onto a blade server. For example, the application may perform Malicious Packet Scrubbing with a tool such as SNORT using its inline functionality. 10 Virtual Machines may be configured on a blade server, each with their own unique MAC ID on assigned to each VM for each interface (Eth0 and Eth1 which are 10 Gbps NIC interfaces). Services may be provisioned based on classifications of customers as gold, silver or bronze, reflecting the level of service to which a customer has subscribed or is otherwise being provided. Virtual Machine #1 is assigned to Gold Customers where 5,000 signatures are loaded into a system that at 100% processor load sustains 200 Mbps at an Internet Traffic Mix. Virtual Machine #2 contains a reduced rule set, 1,000 signatures, for Silver Customers where 100% processor load sustains 500 Mbps at an Internet Traffic Mix. Virtual Machine #3 would be setup for Bronze Customers with 100 signatures looking for the top "in the wild" exploits of interest to home users. At 100% processor load, this mix maintains 800 Mbps with an Internet Traffic Mix. The remaining 7 Virtual Machines may be assigned to business customers with dedicated packet scrubbing. The intent would be to service T-1/E-1 customers (1.5 Mbps service) with extensive rule sets, similar to a Gold Service but with personalized rule sets. At 100% load each of these would be presumed to have similar to Gold Service performance at 200 Mbps with an Internet Traffic Mix. At 5% CPU for each Platinum VM, they should sustain bursts to 10 Mbps, while occupying 35% of total CPU time. The remaining three services might each get 20% CPU providing Gold with 40 Mbps for sale, Silver with 100 Mbps for sale and Bronze with 160 Mbps for sale. Separate from oversubscription, using bandwidth rates this can be equated to customers served and % of an application server and software to identify pricing. This may also be used to measure when load becomes too high.

**[0208]** The VMWare based configuration allows the network processing blades to direct traffic using Ethernet Address (MAC ID) to the physical server blade. Should the virtual machine need to be re-hosted on another blade for performance or availability reasons, traffic redirection can seamlessly migrate as it would be seen as a simple layer 2 switching re-route. Given a static configuration of rules, as in the Bronze, Silver and Gold exemplary embodiment, subscribers would see no loss due to such migration and potentially could be applied to another already running backup without waiting for a switch-over at the VMWare level.

**[0209]** In one embodiment, the DPPM with 10 Gigabit Ethernet Interfaces may act as a line card, interfacing the telecommunication lines coming from the subscribers (such as copper wire or optical fibers) to the rest of the carrier's access network. In this embodiment, the ingress to the BladeCenter may be connected to an upstream router facing the Internet which carries traffic that has not yet been processed.

**[0210]** In a simple implementation, a server blade may be configured to receive traffic using layer 2 delivery and may respond back to the requesting Layer 2 device with the resultant data after processing. In this method, a service may require only one backplane port, may live within a single switch domain and may easily scale to 2 ports and switches for redundancy. This model may require modification of applications, however, a dual 10 Gbps NIC enables an application server to have a primary and secondary should a switch fail. Traffic of interest flows into the DPPM and is inspected to determine which subset requires processing. Traffic not of interest may be immediately sent out of the chassis while traffic to process is sent to the appropriate blade server. The blade server will receive the traffic and, if virtual machine technology is in use, the traffic may be analyzed by the virtual machine to direct it to the virtual interface with the configured soft MAC address of the particular application running thereon. The application will process the traffic according to the service being provided. If, according to the service, the traffic, or a subset thereof, is to be allowed to continue to a destination or over the network, the traffic is provided back to a DPPM. The receiving DPPM will then adapt the traffic to make it appropriate to place back into the service provider network.

**[0211]** FIG. **15** shows a solutions oriented view of the IBM BladeCenter according to one embodiment. Along the bottom are the primary interface blades to the chassis, namely the CloudShield DPPM acting as an NP Blade and one or more Blade Network Technologies (BNT) 10 Gigabit Ethernet Switch Modules. The transport links connected to the service provider may tie into the NP Blades while chassis to chassis interconnect may tie into the BNT Switches. In the figure, a green horizontal bar represents the backplane and the logical separation of CloudShield blades and Server blades provide application level support. In this role, CloudShield DPPM blades may be referred to as Content Processors while the IBM BladeCenter server blades (e.g. HS21 IT Blade) are running Application Servers. As part of the role of an open platform, API's for CP blades and IT blades are identified and may include the RAVE™ migration to PacketC and Cloudshield's Northbound application program interfaces ("APIs") such as SSH and Web Services. This embodiment may be

deployed into regional or metropolitan aggregation nodes, e.g. metro-nodes, where high bandwidth ingest and processing may be required.

**[0212]** In one embodiment, 10 Gigabit Ethernet may be the basis for connectivity of the solution. Internal to the chassis, short point to point signaling may be used while chassis to chassis signaling may utilize fiber based connectivity with features such as link aggregation becoming important on a switch to switch link. Internally and between chassis, virtual local area network ("VLAN") tags of multiple varieties may be added to the packets and the switches should ensure that they operate in L2 switching mode, not performing any specific operations based upon higher layer packet constructs such as VLANs. Static MAC to interface addressing must be supported in the switches. Externally, the ingress and egress traffic may have VLAN tags, 802.1q in q, multiprotocol label switching ("MPLS"), point to point protocol over Ethernet ("PPPoE") and non-IP traffic signaling between routers that must be understood and preserved such that no link issues occur.

**[0213]** In some embodiments, a router may be north and south of the transport interfaces to a cabinet. Further, primary and secondary interfaces to the routers may be provided for redundancy. Considering a single 10 Gigabit pathway, with upstream and downstream connectivity, that brings (4) 10 Gigabit Interfaces to the system that must be monitored for that circuit. Redundant DPPM pairs may be utilized for the primary/secondary fiber pathways in an active/active mode such that with 4 interfaces only 4 blades are required and should any link fail the traffic can adapt to the other pathways. Internally, high speed switch fabrics will be able to hand-off traffic between NP blades. In one implementation, 2 BNT Switches may be leveraged for customer application servers while another 2 BNT Switches may be leveraged for Inter-NP Blade traffic. Customer traffic asymmetry should be considered. Given that application solutions, such as Firewalls, are being introduced as a service, if traffic appears upstream on one given set of NP blades and the response downstream appears in a different chassis in the cabinet, that upstream and downstream traffic may have to be coordinated to arrive at the appropriate application server so that the firewall application sees the expected bidirectional traffic stream. In addition, depending on a provider's core network, upstream and downstream traffic may be divided among metro nodes.

**[0214]** As traffic rates increase, e.g. the percentage of traffic desiring value added services and number of available services, the disclosed embodiments should be able to gracefully scale to tens of 10 Gigabit circuits with a hundred thousand customers and dozens of available services in a given metro node.

**[0215]** Service Traffic Manipulation refers to the re-writing of traffic in order to transform it from the service provider network form ("SPNF") to the internal application server form ("IASF"). Note that there may be many forms in which traffic will arrive at the chassis (MPLS, VLAN, Q in Q, PPPoE, etc.) and those protocols may have no relationship with how an application server may expect to have traffic delivered to it. For example, enterprise class applications or application servers may expect to receive traffic formatted in standard enterprise class protocols, such as Ethernet, as opposed to the protocols used by carriers. The modification of traffic from SPNF to IASF and back to SPNF may be a critical role of the NP Blade. In addition, there may be multiple services applied to a packet for which the NP Blade may need to do multiple IASF to IASF manipulations based upon the application servers requirements for a given service.

**[0216]** FIG. **16** shows a block diagram of one embodiment of the DPPM base card for the IBM BladeCenter. In this embodiment, the network interface module ("NIM") is condensed onto the base board and there is a ternary content addressable memory ("TCAM") added to the content switching system ("PSX") to support the migration from traffic control system ("TCS") to the flow acceleration subsystem ("FAST"). The silicon database ("SDB") may be implemented as a daughter card as shown along the right edge of the figure. Support logic, such as PCI Bridge, Dual GigE MAC, CMX and other elements have either been removed or integrated into the High Speed Daughter Card ("HSDC"), shown in FIG. **17** and described in more detail below. Rocket IO signaling from the SDB and PSX communicate with the HSDC. The FAST indentifies bulk traffic not identified for the provisioning of services by leveraging customer identification lookups in a content addressable memory and user based routing in the chassis. A page index table ("PIT") indicates which action set is to be executed for a given matched customer identity and a flow action table ("FAT") specifies the action and action modifiers. Rule actions include forwarding the packet to the network processing using ("NP"), forwarding the packet to a port with no modification, forwarding the packet to a port with header modification, such as DMAC/SMAC/other), or forwarding the packet to a port with VLAN header modification.

**[0217]** FIG. **17** shows a representation of one embodiment of the High Speed Daughter Card for use in the IBM BladeCenter. In this embodiment, the north chip (Blade Access Controller) is a Virtex 5T that embeds the PCI Bridge, GigE MACs and CMX into an intelligent platform management interface ("IPMI") based management controller. The IXP2805 or NFP-3200 communicates with this device using PCI, Slow Port and a diagnostics The Blade Access Controller ("BAC") and the Fabric Interface Controller (south chip, also Virtex 5T) each manage two of the 10 Gigabit Ethernet backplane interfaces along with Rocket 10 support to the SDB and PSX. The BAC has 4 lanes to the SDB while the FIC has 8 lanes to the PSX. Each of these also has limited queuing ability for flow control using an associated QDR SRAM. There is also a high speed interconnect for packets that need to cross connect between the devices.

**[0218]** In one embodiment, the first action a Service Director must perform is inspecting all traffic to determine whether it is for a customer whom has paid for services. Any traffic which is not for a paying customer must be prioritized to egress immediately on the appropriate link. Depending on the service provider's network, determination of which packets are from a paying customer may be accomplished by multiple means, such as:

**[0219]** IPv4 Address

**[0220]** IPv6 Simple Address

**[0221]** IPv6 Embedded Routing Address

**[0222]** 802.1q VLAN Tag

**[0223]** 802.1q in q Embedded Tag

**[0224]** 802.1q in q Combined Tags

**[0225]** MPLS Label Stack Entry or Pseudo Wire

**[0226]** PPPoE (PPPoEoE per Cisco/Juniper)

**[0227]** In one embodiment, traffic embedded in transport headers which is non-IP within the metro nodes may be considered to be not customer related as non-IP traffic should have not made it from the edge past routers to this point in the

network. As such, all non-IP traffic may be considered not for customers and passed through the architecture. For a given deployment, the Service Provider Network Form (SPNF) should be consistent. In other words the format of traffic coming into the transport interfaces of the DPPM should be of one type from the list above and have only one identification mechanism for customers for a given Service Director blade, though the software may provide options in this regard.

**[0228]** Traffic received on the transport interfaces may be decoded and then the appropriate fields may be interrogated to determine whether the traffic is applicable to a customer and how it should be serviced. For example, if the identification method is IPv4 Address, the source and destination IP addresses will be read and a look up will be performed against the packet. Should a match be found, this may identify that the traffic is to be processed for a particular service. The appropriate action is read and the traffic is directed appropriately. These steps are performed within the FAST and the action may be to pass the packet on to the RAVE™ logic portion of the Services Director for applications.

**[0229]** IPv4 Customer Traffic Identification refers to a method of traffic identification whereby the packets arrive in standard Ethernet II form with IPv4 headers and the IP addresses are utilized to identify the customer. IPv4 traffic identification involves reading the source and destination IP addresses. Traffic flowing from the customer to the destination will utilize the source IP address. In the above described embodiments having dual DPPM's, one DPPM may be responsible for this identification practice. The other DPPM may be responsible for inspecting traffic returning from the destination to the customer and would utilize the destination IP address for identification.

**[0230]** Some networks, especially mobile networks and networks used in Asia, may require IPv6 addressing for identification of customers. IPv6 Simple Addresses refers to the condition where IPv6 is presented with a single header in the packets and the Source and Destination IP addresses can be utilized similar to IPv4 Customer Identification. Note that in IPv6 networks, the applicability of some applications as services may be limited or need further DPI processing in order to present them in a fashion that the application services blades can accept. This may include IPv4 to IPv6 gateways or more detailed flow proxies.

**[0231]** IPv6 Embedded Routing Address Customer Traffic Identification is a similar use case to the IPv6 Simple Address identification, however, in this case more complex routing headers are anticipated on the network and decoded to find a final destination which will be utilized.

**[0232]** FIG. **18** shows a logical representation of an IPv6 packet header with multiple headers and extension headers. In this method of customer identification, it may be the embedded (bottom) routing header that is required to be processed in order to find customer identity.

**[0233]** With respect to 802.1q VLAN Tag Customer Traffic Identification, some networks utilize VLAN tags within the Ethernet header to separate customer for private LAN service or for identification of the customer traffic at layer 2. Based upon deployment location, this may be seen as a one or two labels (Q in Q).

**[0234]** FIG. **19** shows how the labels can be added and removed as they flow through the network by the routers. The 802.1q VLAN Tag Customer Identification works by inspecting the case where a single VLAN Tag (present when EtherType=0x8001) is present. There can be 4096 unique values (12 bits within the 2 bytes following the EtherType) of which 0 is generally no tag used for 802.1p prioritization only yielding at most 4095 customers.

**[0235]** 802.1q in q Embedded Tag Customer Traffic Identification is similar to the previous section, however, two tags are present and the inner tag is utilized rather than the outer/first tag.

**[0236]** With respect to 802.1q in q Combined Tags Customer Traffic Identification, when two tags are present, this is referred to as 802.1q in q (Q-in-Q). As the two tags together offer over 16 million possible combinations, this is often utilized to identify a unique customer as it moves into the metro from the access circuits. This mechanism involves reading the 2 tags (24 bits in total) and leveraging them for determining the customer and the appropriate services to apply. The form is shown in the diagram in the previous section.

**[0237]** MPLS Label Stack Entry Customer Traffic Identification leverages the MPLS label stack as the targeting and identification means of the customer. The entries within the label stack identify the customer for whom processing should be applied. One or more headers are present in order to enable the MPLS Label Switch Routers (LSR) to determine the next hop in a simple review of the labels.

**[0238]** From inspecting the labels, a destination can be identified that may be a useful method for some business customers to be identified for services. Other techniques may simply be focused on a method such as IPv4 identification but must work around the presence of MPLS based Psuedo-wires properly removing and re-applying.

**[0239]** PPPoE Customer Traffic Identification refers to the framing on the Ethernet to be PPP as a point to point transfer pathway while IP headers and content ride above this layer. This is generally found closer to the access point, however, this may be present in the traffic being analyzed for customer identification. Generally, PPP will not be utilized as a mechanism for detection, however, the protocol must be addressed as a carrier for other methods described above. Cisco and Juniper often refer to PPPoE as PPPoEoE (extra oE is over Ethernet again) in order to separate this from PPPoEoA which is DSLAM northbound ATM transport of these types of packets.

**[0240]** The suggested software configuration of the server blades is a fairly typical virtual machine based server, in this case based upon VMWare ESX Server. The VMWare ESX Server software is loaded onto each of the server blades containing a different customer, or group of customer applications within each virtual machine. In this case a single customer might be represented by a large enterprise with a Platinum Service Offering while a group of customers might represent small businesses that purchased a Bronze Service Offering for Malicious Packet Scrubbing. In either case, the representative software application is loaded as a typical virtual machine instance on the server. It may be important, in the configuration of the VMWare ESX Server, to ensure that there is a unique MAC address associated with each Virtual Machine instance that is separate from the physical blade hardware address. This would allow the network processing blades to direct traffic using Ethernet Address (MAC ID) to the physical server blade and should the virtual machine need to be re-hosted on another blade for performance or availability reasons, traffic redirection can seamlessly migrate as it would be seen as a simple layer 2 switching re-route. As more complex services farms are developed, there may be needs to

support more fine-grained traffic segmentation and virtual machines may be configured using VLAN Tag support, 802.1q in the Ethernet Header, to do further segmentation. In other embodiments, tag support in the switch fabrics may used for traffic segmentation instead of using a Layer 2 Ethernet MAC delivery model for the blades.

**[0241]** FIGS. **20** and **21** show the dual-DPPM configuration at left providing an ingress and egress 10 Gbps path as would be deployed in an inline service using one or more server blades executing one or more services. Some situations may not require multiple external links for providing an inline model but rather a single target acting as an MPLS switch path location or a routed-to destination and redundancy may be for processing or network interface redundancy issues.

**[0242]** As traffic arrives on the 10 Gigabit Ethernet interface on a CloudShield DPPM it will be inspected to determine whether the traffic is to be processed within the current chassis or passed along. For traffic destined to this chassis, Deep Packet Inspection technology will be utilized to classify flows and associate with a given customer. If this is a new conversation, this information will be recorded in a Silicon Database for future reference. The database will be referenced to determine the appropriate virtual machine to navigate the traffic to. At this point Ethernet MAC addresses will be modified to navigate traffic appropriately within the chassis and the Ethernet header will be converted to an 802.1q header to include a VLAN tag which will be specified by the DPPM Blade. Traffic will be sent out of the DPPM onto the switch fabric where the destination MAC address will be utilized to direct the packet to the appropriate server blade. VMWare ESX will receive the packet and inspect the VLAN Tag to send it to the appropriate virtual machine. Upon completion of processing returned traffic will have a VLAN Tag applied by the ESX Server and transmission to either the original source MAC address or a prescribed destination will cause the packet to be directed to the appropriate DPPM for egress of the chassis.

**[0243]** FIG. **22** shows a normal untagged Ethernet frame as it would be received by the chassis and its difference with regards to the packet that would be sent within the chassis containing a VLAN tag. Note that the Up to 1500 bytes Data Field represents the TCP/IP datagram delivered over Ethernet. It is through the modification of the first 16 bytes of the packet (Destination MAC ID, Source MAC ID and VLAN Tag) that internal chassis navigation to specific blades and virtual machines are accomplished.

**[0244]** In alternative embodiments, there are cases where load balancing of multiple server blades associated with a single customer application is required. In these cases, the network element could monitor load, health and appropriate distribute traffic in a manner that works for the application such as flow based or protocol based load balancing.

**[0245]** In the above examples, MAC and VLAN tags are leveraged as the mechanism for identifying virtual machines. In some scenarios it may be preferred to have a unique MAC ID per virtual server. There is no reason why destination MAC re-writing cannot be leveraged as the sole mechanism for the mapping should that be preferred or the only mechanism for delivery. Of importance in this scenario is ensuring that the switches cannot be overwhelmed and can learn all MAC IDs for the chassis.

**[0246]** Given that it may take many more server blades than can even fit within a chassis to attain 10 Gbps of Services Processing, in an alternative embodiment, the chassis maybe cascaded at the switch fabric level instead of on the front side DPPM based connections. Since layer 2 switching is maintained across multiple chassis' in this configuration, a DPPM can look at traffic and change the MAC ID and VLAN Tags to associate with a virtual machine and by delivering that packet to the switch fabric locally, layer 2 switching will deliver and return the packets appropriate across a cascaded collection of chassis. It is envisioned that with multiple chassis' switches will be managed in pairs for redundancy but otherwise kept separated to manage traffic and security within the switch.

**[0247]** In implementations where more than one service is sold to a given customer, the DPPM may be responsible for moving traffic from one VM to another until all services have been applied to a given packet. In addition, logic can be applied such that traffic leaving an application in a specific way may dictate which or if any other applications should process the traffic.

**[0248]** For some applications, especially as DoD or Wireless Carrier Markets are addressed, issues such as IPv6 or MPLS come up. The DPPM technology can adapt these packets in a variety of ways such as removing MPLS labels during transmission to the Virtual Machine and re-assigning upon egress or adapting IPv6 addressed packets into private IP based IPv4 ranges for processing by tools within the chassis in an IPv4 space while keeping packets IPv6 as the come in and out of the chassis.

**[0249]** In most cases, traffic sent to a server blade will be expected to be returned to the same DPI blade for finishing up traffic processing. In some cases, however, the traffic may be desired to egress another blade. If traffic flow is set up such that packets are forwarded to a server and then the packet is returned to the requesting source, the DPPM can choose to insert the source MAC address of the desired egress blade before forwarding to virtual machine. Switches will need to be configured with static MAC entries so as to not misinterpret the spoofed source as being the destination to send future packets to the MAC ID, however, in high traffic rate scenarios this can dramatically provide benefits to switch fabric traffic engineering.

**[0250]** Service Providers often would like to provide an enterprise class product embodied in a virtual machine as a multi-user service offering such as a Bronze Firewall Service for small businesses. Unfortunately, most enterprise class products do not have the notion of separately provisioned policy sets per customer nor a notion of reporting to multiple management systems. This is a case where Deep Packet Control can really come into play.

**[0251]** For example, an enterprise firewall may implement a single provisioned rule set and report alerts and logs to a central station via methods such as syslog or SNMP. In a virtual machine scenario as described in this white paper, not only can Layer 2 Ethernet be re-written to appropriately address a given blade server and virtual machine but so too can layer 3 IP information. Within the Blade Center each customer could be given an RFC 1918 private address such as 10.0.0.1 for customer 1, 10.0.0.2 for customer 2 and so on. As traffic comes in from a given customer, the layer 3 information is stored in the DPI devices and re-written to a prescribed private addressed before being forwarded to the firewall. Each customer's policies are adapted to a refined set of address that constrain them to the specific private IP block versus any style rules. As the traffic egresses the firewall, the original addresses are replaced in the packets and sent along their way. In this fashion the rule sets of 1000's of customers can be intelligently merged into a single rule set.

**[0252]** As alerts come out of the system, the contents of the SNMP Trap or Syslog can be inspected to identify the customer (by the private IP), the IP Address content can be replaced in the alert and the packet can be directed to the customer's alert manager as opposed to the singularly configured one in the enterprise firewall. The net result is each customer receives their alerts on their management console (which may be yet another virtual machine) reflecting their traffic only.

**[0253]** Referring to FIG. **23**, as described, the disclosed embodiments may implement a method of transparently provisioning one or more services to a network, such as a firewall service, content control service, malicious content detection service, anti-denial-of-service service, intrusion detection and/or prevention service, internet protocol (IPv4 to IPv6) gateway service, lawful intercept service, URL filtering service, or combinations thereof, etc., the network carrying a plurality of packets each being transmitted by an associated source, e.g. an end user or client device or router, proxy server, web server, etc., to at least one associated intended destination intended by the source, e.g. the destination(s) to which the packet(s) are specifically addressed, routed or otherwise directed by the source. Each of the plurality of packets includes routing data, such as Layer 2 or Layer 3 data, which is operative to cause the forwarding of the packet via the network towards the at least one intended destination, e.g. data which is used by the various routers and switches on the network to forward the packet along a route which should convey the packet to its ultimate destination. This data includes inter-network data, such as Layer 2 data or other data, such as a MAC address, which may be used to route the packet among devices within a network, as well as intra-network data, such as Layer 3 data or other data, such as an IP address, which may be used to route the packet among devices which are connected to different networks. The source and destination may include any combination of inter and intra network devices. Accordingly, for example, the source and destination may include inter-network entities, e.g. within a particular network hop, such as client devices and firewalls and/or proxy servers, or ingress and egress routers of a network, the ingress router receiving external communications and forwarding them, based on the layer 2 or 3 data, to the egress router. Alternatively, the source and destination may include intra-network entities, such as a client web browser and web server communicating using Layer 3 data. The service(s) may be provided by one or more application service providers via one or more applications. The service(s) may be provisioned such that the application service provider(s), at least one of the associated source, at least one associated intended destination, or a combination thereof, are unaware of the provisioning of the service(s) as described below. The service(s) may be provisioned, such as remotely and/or in real time, as managed services, also referred to as managed subscriber services, routing and/or load balancing traffic to one or more applications providing one or more applications.

**[0254]** The method includes interfacing between one or more applications, such as a first application and a second application, and an interface to the network (block **2502**), such as by providing a hardware and/or software interface to which one or more application service providers may couple an application and/or device for implementing a service with respect to the packets being transmitted over the network. In one embodiment, the interfacing is implemented such that the application(s)/device(s) is unaware that it is not directly connected with the network, such as by not requiring that Layer 2 or Layer 3 protocols be modified to accommodate the application(s)/device(s). In addition, the method includes intercepting one or more of the plurality of packets prior to a forwarding thereof, such as by a router or switch, toward the at least one associated intended destination (block **2504**). The interception may take place after the packet has been processed, and forwarded, by an ingress router to a carrier facility, but prior to the receipt and forwarding of that packet by an egress router out of the carrier facility. The method further includes evaluating the intercepted packet(s) based on a one or more specifications of one or more subsets of the plurality of packets with respect to which the application(s) is to perform the service(s) (block **2506**), such as a first specification of a first subset of the plurality of packets with respect to which a first application is to perform a first service and a second specification of a second subset of the plurality of packets with respect to which a second application is perform a second service. At least the first specification may specify the first subset of the plurality of packets based on criteria other than only the routing data contained in the intercepted packet, e.g. other than only the Layer 2 or Layer 3 data. For example, the application service provider(s) may define criteria for which packets are and/or are not to be intercepted, such as criteria based on the packet payload, or portion thereof, alone or in combination with the Layer 2 and/or Layer 3 data. It will be appreciated that the criteria may be defined as inclusive or exclusive criteria, i.e. specifying which packets are to be acted on or, alternatively, which are to be excluded. Further, the method includes acting on the intercepted packet, based on the evaluating, to facilitate the performance of at least one of the service(s), alone or in combination, with respect to the intercepted packet if the intercepted packet is included in at least one of the specified subset(s), or combinations thereof (block **2508**). As noted above, the disclosed embodiments may act on behalf of an application service provider, performing functions specified thereby, and/or the intercepted packets may simply be passed to the device and/or application of the application service provider to be processed according to the service provided thereby. Accordingly, the acting may include at least one of providing at least a copy of at least a portion of the intercepted packet to the application(s), deleting the intercepted packet, substituting a modified intercepted packet for the intercepted packet, substituting a new packet for the intercepted packet, allowing the intercepted packet to continue to the at least one associated intended destination, or other singular or compound actions or combinations thereof. In particular, the acting may include providing the intercepted packet, or a copy thereof, to a first application/device if the intercepted packet is one of a specified first subset to facilitate the performance of a first service with respect to the intercepted packet and generate a result based thereon and to a second application/device if the intercepted packet is one of a specified second subset to facilitate the performance of a second service with respect to the intercepted packet and generate a result based thereon. Further, the method may include receiving the result of the performance of the service(s) on the intercepted packet from the application(s) wherein the result may comprise at least one of an instruction to delete the intercepted packet, an instruction to modify the intercepted packet, an instruction to substitute a modified intercepted packet for the intercepted packet, an instruction to substitute a new packet for the inter-

cepted packet, an instruction to allow the intercepted packet to continue to the at least one associated intended destination, an instruction to respond to the source, or combinations thereof and further wherein the acting further comprises executing the instruction.

**[0255]** As described, in one embodiment, more than one application service provider may be interested in providing more than one service to the network. In one embodiment, the specified subsets of the plurality of packets may be different, e.g. each service provider may be providing a different service with respect to different packets flowing over the network. In another embodiment, the specified subsets may overlap, partially or entirely. For example, the service providers could be interested in the same packets, such as for providing the same service competitively or at different price points, for example. In such a situation, the acting may further comprise providing the intercepted packet only to a first application service provider when the intercepted packet is one of a first subset specified by the first application service provider and one of a second subset specified by a second application service provider. Alternatively, other methods of resolving packet contention may be implemented, such as round robin, or providing each with a copy of the packet(s). In one embodiment, the same application service provider may provide more than one service and those multiple services may the be the same or a different service. For example, an application service provider and/or operator of the disclosed embodiments may wish to provide the same service but split/balance the processing load. Thereby, non-overlapping subsets of the plurality of packets to which each instantiation of the service will be applied may be specified by the application service provider and/or by an operator of the disclosed embodiments. In one embodiment bi-directionally related packets may be routed to the same service of the multiple services.

**[0256]** To reduce implementation barriers, the interfacing may further comprise interfacing between the application(s) and the network without modifying layer 2 or layer 3 protocols of the application(s), the interface to the network, such as a router or switch, or combination thereof. This would avoid having to reconfigure the application(s) or network interface, such as routers or switches, to handle interconnection of the application(s) with the network. In one embodiment, the interfacing may further comprise translating between the protocols used by the network and the protocols used by application(s), e.g. between a service provider network form ("SPNF") and an internal application server form ("IASF"). Intercepted packets would be appropriately modified prior to being provided to the application(s) and any packets provided by the application(s) for release to the network would be appropriately modified prior to such release.

**[0257]** The disclosed embodiments may be implemented as a system for transparently provisioning one or more services provided by one or more application service providers to a network via one or more applications, the network carrying a plurality of packets each being transmitted by an associated source to at least one associated intended destination intended by the source. Each of the plurality of packets may comprise routing data operative to cause the forwarding of the packet via the network towards the at least one intended destination, as was described above. The system may include a packet processor coupled between the application(s) and the network, the packet processor being further operative to intercept at least one of the plurality of packets prior to a forwarding thereof toward the at least one associated intended destination, evaluate the at least one intercepted packet based on one or more specifications of one or more subsets of the plurality of packets with respect to which the application(s) is to perform the service(s), and act on the intercepted packet to facilitate the performance of the service(s), individually or in combination, with respect to the intercepted packet if the intercepted packet is included in one of the associated specified subset(s), wherein at least one of the specifications specifies a subset based on criteria other than only the routing data contained in the intercepted packet. For example, the packet processor may be operative to intercept at least one of the plurality of packets prior to the forwarding thereof toward the at least one associated destination, evaluate the at least one intercepted packet based on a first specification of a first subset of the plurality of packets with respect to which a first application is to perform a first service and a second specification of a second subset of the plurality of packets with respect to which a second application is to perform a second service. Exemplary services include a firewall service, content control service, malicious content detection service, anti-denial-of-service service, intrusion detection and/or prevention service, internet protocol (IPv4 to IPv6) gateway service, lawful intercept service, URL filtering service, or combinations thereof. Further, the services may be provided such that at least one of the associated source, at least one associated intended destination, or a combination thereof, are unaware of the operations of the interface. The service(s) may be provisioned, such as remotely and/or in real time, as managed services, also referred to as managed subscriber services, routing and/or load balancing traffic to one or more applications providing one or more applications.

**[0258]** The act performed by the packet processor may include at least one of provide at least a copy of the intercepted packet to the application(s), delete the intercepted packet, modify the intercepted packet, substitute a modified intercepted packet for the intercepted packet, substitute a new packet for the intercepted packet, allow the intercepted packet to continue to the at least one associated intended destination, respond to the associated source, or other singular or compound actions or combinations thereof. In particular, the interface may be further operative to provide the at least one intercepted packet to a first application if the intercepted packet is one of a specified first subset to facilitate the performance of a first service with respect to the intercepted packet and generate a result based thereon or to a second application if the intercepted packet is one of a specified second subset to facilitate the performance of a second service with respect to the intercepted packet and generate a result based thereon. The interface may then be further operative to receive the result of the performance of the service(s) on the intercepted packet from the application(s) and, wherein the result comprises at least one of an instruction to delete the intercepted packet, an instruction to modify the intercepted packet, an instruction to substitute a modified intercepted packet for the intercepted packet, an instruction to substitute a new packet for the intercepted packet, an instruction to allow the intercepted packet to continue to the at least one associated intended destination, an instruction to respond to the source, or combinations thereof, the packet processor is further operative to execute the instruction.

**[0259]** As described, in one embodiment, more than one application service provider may be interested in providing services to the network and/or an application service provider

may be interested in providing more than one service. In one embodiment, the specified subsets of the plurality of packets may be different. Alternatively, the specified subsets may overlap or be the same. As such, the interface may be further operative to provide the intercepted packet only to a first application when the intercepted packet is one of a first subset and one of a second subset. Alternatively, other methods of resolving packet contention may be implemented, such as round robin, or providing each with a copy of the packet(s).

**[0260]** To reduce implementation barriers, the interface may be capable of coupling between the application(s) and the network without modifying layer 2 or layer 3 protocols of the application(s) and/or interface to the network. This would avoid having to reconfigure the application(s) and/or network interfaces to handle the interconnection of the application(s) with the network.

**[0261]** The system for transparently provisioning one or more services, such as first and second services, the services being provided by one or more, e.g. first and second, application service providers to a network via one or more, e.g. first and second, applications, the network carrying a plurality of packets each being transmitted by a source to at least one intended destination intended by the source, may be implemented by one or more processors, one or more memories coupled with the processor(s), a network interface operative to couple the processor with the network, and an application interface operative to couple the processor with the application(s). Each of the plurality of packets may comprises routing data operative to cause the forwarding of the packet via the network towards the at least one intended destination, as was described above. The system may further comprise first logic stored in the memory(s) and executable by the processor (s) cause the processor(s) to intercept at least one of the plurality of packets prior to a forwarding thereof toward the at least one intended destination, second logic, coupled with the first logic, stored in the memory(s) and executable by the processor(s) to cause the processor(s) to evaluate the at least one intercepted packet based on one or more, e.g. first and second, specifications of one or more, e.g. first and second, subsets of the plurality of packets with respect to which the application(s) is to perform the service(s), wherein at least the first specification specifies the first subset based on criteria other than only the routing data contained in the intercepted packet, and third logic, coupled with the second logic, stored in the memory(s) and executable by the processor(s) to cause the processor(s) to act on the intercepted packet to facilitate the performance of at least one of the service(s), individually or in combination, with respect to the intercepted packet if the intercepted packet is included in at least one of the associated specified subset(s), individually or in combination.

**[0262]** It will be appreciated that the application(s) may be implemented in software executing on the packet processor or implemented in a separate device connected thereto.

## IX. The Fifth Embodiment

**[0263]** Meeting the universal demand for an Internet that is more robust, that is capable of sustaining its own growth and that can adapt to new technologies, requires the migration of the current network infrastructure to next generation networking technologies. This next generation data network is often referred to as the "Optical Internet."

**[0264]** The shift to the Optical Internet has created a new set of challenges. Chief among these challenges is the need to manage an exponentially higher volume of network traffic at much higher rates of speed. In the U.S., the principal standard for optical networks is the American National Standards Institute ("ANSI") standard for synchronous data transmission over optical media known as Synchronous Optical Network ("SONET"). The SONET standard actually comprises multiple standards for transmission rates up to 9.953 gigabits per second ("Gbps") with the capability to go up to 20 Gbps. Each transmission rate standard is known as an Optical Carrier Level ("OC-X"). Exemplary optical carrier levels include OC-12 for communications at 622.08 Mbps, OC-48 for communications at 2.488 Gbps and OC-192 for communications at 10 Gbps. Today's microprocessors face a situation where they cannot support the pace of performance increases associated with the deployment of fiber-based network bandwidth of OC-48 and higher. Simply put, the move to fiber-optic networks has pushed the physical limits of microprocessors and the I/O bus beyond their current technical capabilities. The platform described herein is designed to address many issues associated with Optical Internet services that cannot be addressed by the current software based firewall servers.

**[0265]** FIG. **9** shows an exemplary device **900** for intercepting and processing packets at wire speed from an optical based network **100**, such as the Internet, compatible with the OC-48 standard or faster. For a more detailed explanation of the operation of devices which intercept and process packets, refer to U.S. patent application Serial entitled "EDGE ADAPTER ARCHITECTURE APPARATUS AND METHOD", which is captioned above. The exemplary device **900** may include the Rapid Intelligent Processing Platform manufactured by Cloudshield Technologies, Inc., located in San Jose, Calif. For clarity, some components of the device **900** are not shown.

**[0266]** The device **900** shown in FIG. **9** is coupled with the network **100** (consisting of an upstream network portion **100**A and a downstream network portion **100**B) via a network connection **910** so as to be able to intercept and process packets communicated between the upstream network portion **100**A and the downstream network portion **100**B of the network **100**. Herein, the phrase "coupled with" is defined to mean directly connected to or indirectly connected through one or more intermediate components. Such intermediate components may include both hardware and software based components. In one embodiment, the network connection **910** is an optical network connection. In an alternate embodiment, the network connection **910** is an electrical network connection.

**[0267]** In one embodiment, not shown in the figure, the device **900** is configured to operate within a rack-mount system, e.g. implemented as a blade for installation within a blade enclosure, such as the IBM Blade Center described above, comprising a chassis which provides power, cooling and a housing for the other components, as described below. The housing further includes a backplane into which the other components plug into and which interconnects those components. Such components may include interface components to couple external devices to add additional processing functionality.

**[0268]** The device **900** includes two primary processing elements **904**A, **904**B which intercept and process packets from the network **100**. One primary processing element **904**A is coupled with the upstream network **100**A and the other primary processing element **904**B is coupled with the downstream portion of the network **100**B via the network interface **920**. It will be appreciated that additional primary processing

elements **904**A, **904**B may be provided depending on the topology, physical and logical arrangement of the network **100** and the coupling point of the device **900**. Further, the functionality of the processing elements **904**A, **904**B may be consolidated into a single processing element. In one embodiment, each primary processing element **904**A, **904**B includes a printed circuit board capable of being plugged into the backplane described above. For more detail on the operation of the primary processing elements, refer to U.S. patent application entitled "APPARATUS AND METHOD FOR INTERCONNECTING A PROCESSOR TO CO-PROCESSORS USING SHARED MEMORY", captioned above.

**[0269]** The primary function of the primary processing elements **904**A, **904**B is to perform stateless processing tasks on the incoming packet stream. Stateless processing tasks are tasks that do not require knowledge of what has come before in the packet stream. Stateless tasks include ingress and egress filtering. Ingress and egress filtering involves ensuring that packets arriving from a particular portion of the network actually came from that portion of the network, as was described above. For example, where the device **900** is programmed with the range of network addresses in the portion of the network **100**B downstream of the device **900**, packets arriving from that downstream portion with a network address out of range would be detected as invalid and filtered out of the packet stream, or vice versa for the upstream portion of the network **100**A. Egress filtering refers to filtering in the upstream to downstream direction and ingress filtering refers to filtering in the downstream to upstream direction. For the filtering function, the filter values are typically maintained in block lists. Note that while filtering is a stateless function, independent of what packets have come before, the device **900** interjects stateful processing, as described below, to dynamically update the filtering or other information required for the stateless processing tasks. While the network processor **906**A, **906**B on the primary processing elements **904**A, **904**B can store state information about historical packet activity, each processing element **904**A, **904**B only sees one direction of the packet flow off the network **100**. Therefore, they cannot perform true stateful processing tasks which requires bi-directional visibility. This functionality is provided by the secondary processing elements **912**A, **912**B, described in more detail below.

**[0270]** The device **900** further includes two secondary processing elements **912**A, **912**B which are coupled with the primary processing elements **904**A, **904**B via a command/control bus **924** and packet busses **926**A, **926**B, **926**C, **926**D. In one embodiment, each secondary processing element **912**A, **912**B is a printed circuit board capable of being plugged into the backplane described above. Additional secondary processing elements **912**A, **912**B may be included or the functionality of the secondary processing elements **912**A, **912**B may be consolidated into a single secondary processing element. In one embodiment, the command/control bus **924** is a bus routed over the interconnecting backplane of device **900** and complying with the Compact Personal Computer Interface ("cPCI") standard and is 64 bits wide and operates at a frequency of at least 33 MHz. Exemplary packet busses **926**A, **926**B, **926**C, **926**D include busses complying with the IX bus protocol of the Intel IXP1200 Network Processing Unit and are described in more detail below. Each exemplary packet bus **926**A, **926**B, **926**C, **926**D may be bi-directional, 64 bits wide and operate at a frequency of at least 84 MHz and may be routed over the backplane described above. Alternatively, other bus technologies/protocols may be used and are dependent upon the implementation of the device **900**. The command/control bus **924** carries command and control information between the primary and secondary processing elements **904**A, **904**B, **912**A, **912**B. The packet busses **926**A, **926**B, **926**C, **926**D carry packet data between the primary and secondary processing elements **904**A, **904**B, **912**A, **912**B. For more detail on the operation of the secondary processing elements, refer to U.S. patent application entitled "APPARATUS AND METHOD FOR INTERFACING WITH A HIGH SPEED BI-DIRECTIONAL NETWORK", captioned above.

**[0271]** The primary function of the secondary processing elements **912**A, **912**B is to perform stateful processing tasks, i.e. tasks which are dependent on historical activity. One example of a stateful processing task involves network security applications which require monitoring conversations, i.e. bi-directional packet flow, in the packet stream, typically consisting of requests and responses to those requests. Stateful processing and the ability to monitor traffic bi-directionally allows the secondary processing elements watch for requests and responses and match them up. The arrangement of the inbound network processors **906**C of the secondary processing elements **912**A, **912**B, described in more detail below, allows them to share information about packets coming from either direction, i.e. upstream or downstream. Further, the secondary processing elements **912**A, **912**B can affect the stateless processing of the primary processing elements **904**A, **904**B. For example, where the secondary processing elements **912**A, **912**B determine that packets from a certain network address are consistently invalid, the secondary processing elements **912**A, **912**B can add that network address to the filtering list of the primary processing elements **904**A, **904**B thereby dynamically updating the stateless processing environment.

**[0272]** For example, packets such as those traversing between a web browser and web server change port numbers once a session between the two entities is created. A stateless rule cannot be applied that says "don't allow HTTP POST commands from network address ABC" without destroying all communications from the network address ABC. To accomplish the desired filtering and not destroy all communications from the source network address, the device **900** watches for new sessions directed to the web server on port 80 (standard HTTP application port). By watching the traffic, an example session might choose to then communicate on port 23899 at the web server. Only by subsequently watching traffic destined to this new port would the device **900** be able to search for HTTP POST commands that need to be blocked. Once identified, the packets could then be dealt with. If the session startup was not monitored and information not stored for future reference, i.e. not storing state information, an HTTP POST command traversing the network as part of a text stream from a different application, such as a document about how to configure a blocking system, might be falsely identified. Stateful inspection generally requires visibility to traffic in both directions. In the case above, a packet from the client to the server would have shown the request for a new web session. The response from the server to the client would have shown the web server port number to monitor. In firewalls it is also this response that subsequently allows that port number to have future traffic allowed through the firewall. This second port number on the server is the one for which traffic can be subsequently monitored for the HTTP POST. By stor-

ing relevant information for future packet processing analysis, the device **900** is made stateful.

**[0273]** In addition, the device **900** includes a management adapter **914** which is coupled with the command/control bus **924**. The management adapter **914** is used to manage the device **900** and control the functionality of the primary and secondary processing elements **904**A, **904**B, **912**A, **912**B. In one embodiment, the management adapter **914** includes a computer server having dual-Pentium III processors manufactured by Intel Corporation, located in Santa Clara, Calif., or suitable alternatives. The management adapter **914** further includes at least 64 MB of RAM and at least 10 GB of hard disk storage. The management adapter **914** is preferably implemented as a single board computer that plugs into the back plane, as described above, although more than one board as well as a stand alone personal computer may also be used. The management adapter **914** further includes an external management interface (not shown) which allows the connection of an external management device (not shown) for programming, controlling and maintaining the device **900**. In one embodiment, the external management interface includes a model 82550 100 megabit Ethernet Interface manufactured by Intel Corporation, located in Santa Clara, Calif. Other interfaces, such as serial, parallel, coaxial and optical based interfaces may also be used. In one embodiment, the external management device is a desktop computer such as the Deskpro Model ENS SFF P733 manufactured by Compaq Computer Corporation, located in Houston, Tex. Alternatively, any suitable Pentium™ class computer having suitable memory and hard disk space in addition to Ethernet or other form of network connectivity, may be used. Further, the external management device may be located locally with respect to the device **900** or remotely and connected to the device **900** via a local or wide area network.

**[0274]** The primary processing elements **904**A, **904**B are preferably capable of operating in parallel. The two primary processing elements **904**A, **904**B, are also referred to as Media Adapter Cards ("MAC") or Media Blade Adapters ("MBA"). Each primary processing element **904**A, **904**B includes a network interface **920**, two network processors **906**A, **906**B, a set **922**A, **922**B of one or more co-processors **908**, a packet bus interface **928**A, **928**B, and a command/control bus interface **916**. The network interface **920** is coupled with the network **100** via the network connection **910**. In one embodiment, the network connection **910** is an optical network connection operating at a throughput of approximately 2.5 Gbps and a 1, 4 or 16 bit width. Each network processor **906**A, **906**B is coupled with the network interface **920**, in a parallel configuration, to receive packets from the network **100**. The network interface converts the protocol, bus width and frequency of the network connection **910** to the protocol, bus width and frequency of the network processors **906**A, **906**B. Further, the network interface **920** splits the incoming data stream between the network processors **906**A, **906**B, as described below. It will be appreciated that the disclosed embodiments can support any number of network processors **906**A, **906**B operating in parallel as described below, as the application demands. Further, each secondary processing element **912**A, **912**B is also coupled with network interface **920** of one of the primary processing elements **904**A, **904**B via packet busses **126**C, **126**D to transmit packets onto the network **100**, described in more detail below. The network interface **920** converts the protocol, frequency and bus width of the packet busses **126**C, **126**D from the secondary processing elements to the protocol, frequency and bus width of the network connection **910**. In addition, each network processor **906**A, **906**B is coupled with a set **922**A, **922**B of one or more co-processors **908** which is described in more detail below. Further, each network processor **906**A, **906**B is coupled with the command/control bus **924** via command/control interface busses **930**A, **930**B and the command/control bus interface **916**. In one embodiment, the command/control interface busses **930**A, **930**B are compliant with the Personal Computer Interface ("PCI") standard and are 32 bits wide and operate at a frequency of at least 33 MHz. Further, the command/control bus interface **916** is a PCI to cPCI bus bridge for interfacing the busses **930**A, **930**B with the command/control cPCI bus **924**, described above. Both network processors **906**A, **906**B are also coupled with one of the secondary processing elements **912**A, **912**B via the packet bus interface **928**A, **928**B and the packet bus **926**A, **926**B.

**[0275]** Each secondary processing element **912**A, **912**B also includes two network processors **906**C, **906**D, in a serial configuration, and a command/control bus interface **916**. It will be appreciated that the disclosed embodiments can support any number of network processors **906**A, **906**B operating serially as described below, as the application demands. Each of the network processors **906**C, **906**D is coupled with the command/control bus **924** via the command/control interface busses **930**C, **930**D and the command/control bus interface **916**. In one embodiment, the command/control interfaces are at least 33 MHz 32 bit PCI compliant as described above and the command/control bus interface **916** is a PCI-to-cPCI bus bridge as described above. One of the network processors **906**C is coupled with both network processors **906**A, **906**B of one of the primary processing elements **904**A, **904**B via the packet bus **926**A, **926**C and packet bus interface **928**A, **928**B for receiving packet data from the primary processing elements **904**A, **904**B. The other of the network processors **906**D is coupled with the network interface **920** of the other of the primary processing elements **904**A, **904**B via the packet bus **926**B, **926**D for sending packet data to the network **100**, as described above. The secondary processing elements **912**A, **912**B are also referred to as Intelligent Packet Adapters ("IPA").

**[0276]** Each secondary processing element **912**A, **912**B further includes a shared synchronous dynamic RAM ("SDRAM") memory fabric **918** coupled between each of the network processors **906**C, **906**D to allow the network processors **906**C, **906**D to operate uni-directionally and move data from the inbound network processor **906**C to the outbound network processor **906**D. For more detail on the operation of this memory fabric **918**, refer to U.S. patent application entitled "APPARATUS AND METHOD FOR INTERFACING WITH A HIGH SPEED BI-DIRECTIONAL NETWORK", captioned above.

**[0277]** In addition, one of the network processors **906**C, from each secondary processing element **912**A, **912**B is coupled with a set **922**C of co-processors **908**. It will be appreciated that the description below relating to the sharing of co-processors **908** sets **922**A, **922**B between the two network processors **906**A, **906**B of the primary processing element **904**A, **904**B are applicable to the arrangement of the co-processors **908** and the secondary processing elements **912**A, **912**B. In one embodiment of the secondary processing elements **912**A, **912**B, the network processors **906**C which are sharing the co-processors **908** of set **922**C are located on

two different circuit boards (one for each element **912**A, **912**B) which share a common daughter card containing the set **922**C of co-processors **908**.

**[0278]** Each network processor **906**C, **906**D handles one direction of the bi-directional packet flow coming to/from the secondary processing elements **912**A, **912**B. In particular, the inbound network processor **906**C handles traffic incoming to the secondary processing element **912**A, **912**B and performs inspection and analysis tasks. The outbound network processor **906**D handles outgoing traffic from the secondary processing element **912**A, **912**B and performing actions on the packet such as modification, cleansing/deletion or insertion of new or replacement packets. By serializing the network processors **906**C, **906**D on the secondary processing elements **912**A, **912**B, the processing of packets can be divided into steps and distributed between the two network processors **906**C, **906**D. It will be appreciated more network processors **906**C, **906**D may be coupled serially to enhance the ability to sub-divide the processing task, lowering the burden on any one network processor **906**C, **906**D only at the cost of the latency added to the packet stream by the additional network processors **906**C, **906**D and the additional hardware cost. The network processors **906**C, **906**D intercommunicate and share data via an SDRAM memory fabric to implement this serial packet flow. For more detailed information, refer to U.S. patent application entitled "APPARATUS AND METHOD FOR INTERFACING WITH A HIGH SPEED BI-DIRECTIONAL NETWORK", captioned above. Further each secondary processing element **912**A, **912**B handles a different direction of packet flow from the network **100**. In particular, the upstream secondary processing element **912**A handles packets flowing from the network **100**A upstream of the device **900** to the network **100**B downstream of the device **900**. The downstream secondary processing element **912**B handles packets flowing from the network **100**B downstream of the device **900** to the network **100**A upstream of the device **900**. For a more detailed description, please refer to U.S. patent application entitled "APPARATUS AND METHOD FOR INTERFACING WITH A HIGH SPEED BI-DIRECTIONAL NETWORK", captioned above.

**[0279]** The device **900** intercepts and processes packets from the network **100**. One "upstream" primary processing element **904**A intercepts packets arriving from the network **100**A upstream of the device **900** and the other "downstream" primary processing element **904**B intercepts packets arriving from the network **100**B downstream of the device **900**. The intercepted packets are pre-processed, as described above, and then passed on to a corresponding secondary processing element **912**A, **912**B for subsequent processing and possible release back to the network **100**. Further, within each primary processing element **904**A, **904**B, the network interface **920** converts the protocol, frequency and bus width of the network connection **910** to the protocol, frequency an bus width of the network processors **906**A, **906**B and splits the incoming packet stream among the two network processors **906**A, **906**B which process packets in parallel (explained in more detail below). In one embodiment, the packet stream is alternated between the network processors **906**A, **906**B in a "ping-pong" fashion, i.e. a first packet going to one network processor **906**A, **906**B, the second packet going to the other network processor **906**A, **906**B and the next packet going back to the first network processor **906**A, **906**B, and so on. For more detail on this parallel packet processing architecture, refer to U.S. patent application entitled "EDGE ADAPTER ARCHITECTURE APPARATUS AND METHOD", captioned above. The network processors **906**A, **906**B are further coupled with the packet bus interface **928**A, **928**B which couples both network processors **906**A, **906**B with the common packet bus **926**A, **926**C to the secondary processing elements **912**A, **912**B. The packet bus interface **928**A, **928**B converts the bus width of the packet processors **906**A, **906**B to the bus width of the packet bus **926**A, **926**C. For more information about the packet bus interface **928**A, **928**B, refer to U.S. patent application entitled "APPARATUS AND METHOD FOR INTERCONNECTING A PROCESSOR TO CO-PROCESSORS USING SHARED MEMORY", captioned above.

**[0280]** For example, a packet traveling from the network **100**A upstream of the device **900** to the network **100**B downstream of the device **900** is intercepted by the network interface **920** of the upstream primary processing element **904**A. The network interface **920** passes the intercepted packet to one of the network processors **906**A, **906**B which preliminarily process the packet as described above. This may involve the shared co-processors **908**, as described below. The packet is then transmitted to the inbound network processor **906**C of the upstream secondary processing element **912**A for subsequent processing via the packet bus interface **928**A and the packet bus **926**A. Within the upstream secondary processing element **912**A, the packet is processed and moved from the inbound network processor **906**C to the outbound network processor **906**D via the SDRAM memory fabric **918**. This processing may involve processing by the shared co-processors **922**. If it is determined that the packet is to be released, in original or modified form, the outbound network processor **906**D sends the packet to the network interface **920** of the downstream primary processing element **904**B via the packet bus **926**B. The network interface **920** of the downstream primary processing element **904**B then transmits the packet back onto the network **100**B.

**[0281]** For packets traveling from the network **100**B downstream of the device **900** to the network **100**A upstream of the device **900**, the packets are intercepted by the network interface **920** of the downstream primary processing element **904**B. The network interface **920** passes the intercepted packet to one of the network processors **906**A, **906**B which preliminarily process the packet as described above. This may involve the shared co-processors **908**, as described below. The packet is then transmitted to the inbound network processor **906**C of the downstream secondary processing element **912**B for subsequent processing via the packet bus interface **928**B and packet bus **926**C. Within the downstream secondary processing element **912**B, the packet is processed and moved from the inbound network processor **906**C to the outbound network processor **906**D via the SDRAM memory fabric **918**. This processing may involve processing by the shared co-processors **922**. If it is determined that the packet is to be released, in original or modified form, the outbound network processor **906**D sends the packet to the network interface **920** of the upstream primary processing element **904**A via the packet bus **926**D. The network interface **920** of the upstream primary processing element **904**A then transmits the packet back onto the network **100**A.

**[0282]** Overall, the device **900** intercepts packets flowing in an up or downstream direction, processes them and determines a course of action based on the application that the device **900** is implementing. Such actions include, for example, releasing the packet to the network **100**, modifying

the packet and releasing it to the network **100**, deleting the packet, substituting a different packet for the intercepted packet, forwarding the packet to additional internal or external processing resources (not shown), logging/storing information about the packet, or combinations thereof. Applications include content delivery application or security applications such as for preventing unauthorized network access or preventing denial of service attacks.

**[0283]** The network processor **906**A, **906**B, **906**C, **906**D used in the primary and secondary processing elements **904**A, **904**B, **912**A, **912**B is preferably a general purpose network processor which is suitable for a wide variety of network applications. In one embodiment, each primary and secondary processing element **904**A, **904**B, **912**A, **912**B includes two network processors **906**A, **906**B, **906**C, **906**D and supporting hardware (not shown), as described above. An exemplary network processor **906**A, **906**B, **906**C, **906**D is the Intel IXP1200 Network Processor Unit, manufactured by Intel Corporation, located in Santa Clara, Calif. or Netronome NFP-3200 network flow processor manufactured by Netronome Inc., located in Cranberry Twp, Pa. For more detailed information about the exemplary processor **906**, please refer to Intel® IXP1200 Network Processor Datasheet part no. 278298-007 published by Intel Corporation, located in Santa Clara, Calif. This exemplary network processor **906**A, **906**B provides six micro-engines/path-processors for performing processing tasks as well as a StrongARM™ control processor. Each of the network processors **906**A, **906**B, **906**C, **906**D preferably operates a frequency of 233 MHz or faster, although slower clock speeds may be used. It will be appreciated that other network specific or general purpose processors may be used.

**[0284]** As with most general purpose processors, the network processor **906**A, **906**B, **906**C, **906**D is capable of being programmed to perform a wide variety of tasks. Unfortunately, this adaptability typically comes at the price of performance at any one given task. Therefore, to assist with the processing of packets, each network processor **906**A, **906**B on the primary processing element **904**A, **904**B and the inbound network processor **906**C on the secondary processing element **912**A, **912**B is coupled with one or more co-processor **908** sets **922**A, **922**B, **922**C. The co-processors **908** on each set **922**A, **922**B, **922**C may be specialized processors which perform a more limited set of tasks, but perform them faster and more efficiently than the network processor **906**A, **906**B, **906**C is capable of. In one embodiment, the co-processors **908** include one or more classification co-processors and one or more content addressable memories ("CAM").

**[0285]** The classification co-processors **908** are used to accelerate certain search and extraction rules for the network processor **906**A, **906**B, **906**C. In one embodiment of device **900**, the co-processor **908** set **922**A, **922**B of each primary processing element **904**A, **904**B includes two classification co-processors **908**. The shared co-processor **908** set **922**C also includes two classification co-processors shared by the secondary processing elements **912**A, **912**B. An exemplary classification co-processor is the PM2329 ClassiPI Network Classification Processor manufactured PMC-Sierra, Inc., located in Burnaby, BC Canada. This co-processor is capable of operating at a frequency of at least 100 MHz.

**[0286]** The CAM co-processors **908** are used to facilitate certain search and compare operations that would otherwise be computationally intensive and degrade the performance of the network processor **906**A, **906**B, **906**C. It is preferable that the CAM co-processors **108** be capable of being cascaded together, from 2 to 8, or more devices, to increase the search range. It is further preferable that the CAM co-processors **108** have the capability of processing at least 100 million compares per second. In such a design, each CAM data bit has an associated local mask bit that is used during the compare operation. In contrast with global mask bits, the local mask bits are used only with the associated bit and only for compare operations. This provides masking on an individual bit basis for ternary operation. In one embodiment of the device **900**, the co-processor **908** set **922**A, **922**B of each primary processing element **904**A, **904**B includes eight CAM co-processors **908**. The shared co-processor **908** set **922**C also includes eight CAM co-processors **908** shared by the secondary processing elements **912**A, **912**B. An exemplary CAM is the NetLogic NSE3128 Network Search Engine, formerly named IPCAM®-3, manufactured by NetLogic Microsystems, Inc., located in New York City, N.Y. For more detailed information about the exemplary CAM, refer to NSE3128 Network Search Engine product brief available at the web site netlogic.com/html/datasheets/nse3128.html, last accessed May 11, 2001.

**[0287]** An exemplary CAM device may have at least the following features:

- **[0288]** Organization options of any single device in cascade: 64K×72, 32K×144 or 16K×288;
- **[0289]** Local mask bit associated with each CAM;
- **[0290]** Clock rates: 50/66/100 MHz for 1 megabit devices or up to 200 MHz for a 9 megabit device;
- **[0291]** Eight global mask registers;
- **[0292]** 16 bit instruction bus;
- **[0293]** 32 bit result bus;
- **[0294]** 36/72 bit comparand bi-directional bus or 72/144 bit comparand bus for a 9 megabit device;
- **[0295]** flags to indicate Match ("/M"), Multiple Match ("/MM") and Full Flag ("/FF"); and
- **[0296]** 24 bit Next Free Address ("NFA") bus.

**[0297]** It will be appreciated that other classification processors and CAM's may be used and that additional task specific co-processors may also be used, such as cryptographic co-processors, to enhance the processing capability of the primary or secondary processing elements **904**A, **904**B, **912**A, **912**B.

**[0298]** As was discussed, the device **900** has to be able to operate at wire speed or faster so as not to degrade network throughput. In the case of an OC-48 class network, this means handling communications speeds of nearly 2.5 Gbps in both directions through the device **900** simultaneously to achieve full duplex functionality, for a total of nearly 5 Gbps throughput for the device **900**. Ideally, to achieve this goal, the co-processors **908** should be directly connected to the network processors **906**A, **906**B, **906**C. This would achieve the highest bandwidth of data exchange between these devices, maximizing their utilization and efficiency. Unfortunately, physical, electrical and device design limitations make this direct connection difficult to achieve.

**[0299]** With regard to the primary processing elements **904**A, **904**B, the physical limitations primarily include the limited amount of space/area available on a single circuit board. It is difficult and expensive to implement two network processors **906**A, **906**B, their supporting hardware and up to ten co-processors **908**, or more, as well as all of the routing interconnections on a single circuit board. An alternative is to move some of the devices to daughter card circuit boards

which plug into a main circuit board. This would increase the available area for part placement but introduces electrical concerns regarding the interfaces between the devices. In particular, a daughter card arrangement introduces a board-to-board connector between the daughter card and the main circuit board. This connector introduces undesirable electrical characteristics into the interface between devices mounted on the daughter card and devices mounted on the main circuit board. These undesirable characteristics include increased noise, lower limits on operating frequency, increased parasitic capacitance, increased resistance and increased inductance. These characteristics limit the speed with which these devices can communicate. In order to properly interface across the connector, careful modeling is required to predict the electrical behavior of the connector and how it will impact the interface.

**[0300]** Further, complexities related to interfacing the network processors **906**A, **906**B to the co-processors **908** also complicate the design and implementation of the device **900**. In particular, both the network processor **906**A, **906**B and the co-processors **908** provide input/output busses for the purpose of interconnecting that device with other devices. However, the network processor **906**A, **906**B as well as the different types of co-processors **908**, all have different interface requirements, such as different supported clock frequencies, bus widths and communications protocols. In addition, the interfaces are further complicated by the desire to connect more than one of each type of co-processor **908** with the network processor **906**A, **906**B. Even further complicating the interface requirements is the desire to allow each network processor **906**A, **906**B on the processing element **904** to share the same co-processors **908** and allow each inbound network processor **906**C to share the same co-processor **908** set **922**C. Sharing co-processor **908** sets **922**A, **922**B, **922**C allows the network processors **906**A, **906**B, **906**C to interoperate and share data, such as state information, in addition to saving costs by reducing the number of devices on the primary processing elements **904**A, **904**B. When one network processor **906**A, **906**B, **906**C decides to store state information, that information is made available to the other network processor **906**A, **906**B, **906**C. Further, when global updates to the data stored within the co-processors **908** are needed, such as updates to the CAM tables, these updates can be performed more efficiently since there are fewer co-processor sets **922**A, **922**B, **922**C to update. For example, when the secondary processing elements **912**A, **912**B, due to the result of some stateful processing task, need to update the state information in the CAM data, such as the filtering block lists, the updates need to go to fewer devices resulting in a faster and more efficient distribution of those updates. Further, the sharing of state information among the network processors **906**A, **906**B on the primary processing elements **904**A, **904**B, allows the network processors **906**A, **906**B to operate in parallel and thereby reduces the traffic flow to each network processor **906**A, **906**B, achieving a longer number of clock cycles over which a packet may be processed.

**[0301]** For more detail on the operation of this co-processor **90** sharing and the interface between the primary and secondary network elements **904**A, **904**B, **912**A, **912**B and the co-processor sets **922**A, **922**B, **922**C, refer to U.S. patent application entitled "APPARATUS AND METHOD FOR INTERCONNECTING A PROCESSOR TO CO-PROCESSORS USING SHARED MEMORY", captioned above.

**[0302]** In addition, the architecture of the device **900** allows for efficient processing of any portion of the packet regardless of whether it is in the header or payload. This allows for more flexible packet analysis which can adapt to changing network protocols. For example, packet changes such as Multi-protocol Label Switching ("MPLS") have made even the normal IP header look different in a packet since it is now preceded by the MPLS tag. Similarly, new network application are constantly being developed may have their own format and header/payload structure. The disclosed architecture does not treat the header any different from payload in its ability to analyze a given packet. This allows for maximum adaptability to evolving network technologies.

**[0303]** As can be see, the above description discloses a unique architecture capable of bridging the technology gap between existing network processing technology and next generation networking technology. The architecture of the device **900** leverages parallel processing for stateless tasks and serialized/staged processing for stateful tasks. It will be appreciated that the ability to process data statefully requires bi-directional visibility over the traffic stream of the network **102** and further requires deployment of the device **900** at a point, i.e. a choke point, within the network **102** where all traffic of interest is visible and through which it must flow. Alternatively, the device **900** can provide partial stateful and stateless operation in situations where complete bi-directional visibility cannot be guaranteed or is not available.

**[0304]** For stateless processing tasks, such as filtering, preprocessing and other tasks not requiring knowledge of historical packet activity or matching of bi-directional packet activity, multiple parallel network processors **906**A, **906**B are provided for each network **102**A, **102**B direction of the bi-directional traffic stream. The incoming packets are equally distributed among the parallel network processors **906**A, **906**B, which reduces the load on any one processor. As described above, the primary processing elements **904**A, **904**B provide two network processors **906**A, **906**B each, operating parallel. Further, the architecture is scalable, allowing for additional parallel network processors **906**A, **906**B to be added to provide additional processing capability, with only the cost of the additional hardware required. The architecture of the device **900** further allows for the parallel network processors **906**A, **906**B to share a common set **922**A, **922**B of co-processors **108**. In addition to hardware savings, this configuration permits the processors **906**A, **906**B to share state information among themselves, further increasing efficiency of operation.

**[0305]** Where a particular application requires stateful processing tasks, such as a security application that needs to monitor bi-directional and/or historical packet activity, the architecture of the device **900** further provides serialized/staged processors for each direction of the packet flow. These serialized/staged processors divide up the required processing tasks, thereby reducing the load on any one processor. For each direction, a the packet data flows through an inbound processor **906**C dedicated to receiving inbound traffic and performing inspection, analysis and other preliminary tasks. The inbound processor then passes the packet data to an outbound processor via a memory fabric, described above. The outbound processor then completes the processing, such as by modifying, deleting, or releasing the packet modified or unmodified and or logging/storing information about the packet for subsequent processing. It will be appreciated that the architecture is scalable and that additional network pro-

cessors **906**C, **906**D may be added to further divide up the processing burden, reducing the load on individual network processors **906**C, **906**D. Additional network processors **906**C, **906**D may be connected using the described memory fabric or by coupling multiple secondary processing elements **912**A, **912**B in series via the IX bus and backplane described above. Further, the inbound processors of each direction of packet flow are coupled together via a common set **922**C of co-processors similar to the parallel configured processors **906**A, **906**B. In addition to the hardware savings, this configuration permits the efficient sharing of bi-directional packet activity, thereby providing complete stateful processing capability of the bi-directional packet flow. Further, the network processors **906**C, **906**D performing the stateful processing can dynamically update state information to the stateless network processors **906**A, **906**B, thereby providing dynamic accommodation to changing network conditions.

**[0306]** The architecture of the device **900** bridges the network and packet processing technology gap by distributing the processing tasks and reducing the load and utilization of any one network processor **906**A, **906**B, **906**C, **906**D. For example, Network Processing Units (NPUs) such as the Intel® IXP1200, described above, were originally designed to be "systems on a chip" that performed all of the required processing tasks. They provide data buses, memory buses (SDRAM and SRAM) as well as interface buses (general purpose IO and PCI). Additionally they have multiple fast path processors, often called micro-engines, and control processors often embedded or attached via a control processor interface. In the case of the Intel IXP1200 a StrongARM control processor is embedded. These chips expect that data flows in from the data bus, is processed immediately or stored in SDRAM or SRAM memory for further processing. At the time of forwarding of the data, the data is read from the memory and forwarded out on the data bus. This methodology infers that data must traverse the data and memory buses at least twice, once to store and once to forward a packet.

**[0307]** The architecture of the device **900** sends packets on a data bus only once and traverse the memory bus at most twice versus a possible three times in the prior design. With regards to the memory bus the packet is written and only the portions of the packet required for inspection which were not processed as they flow through the processor need be read. This results in a 1 to 2 times flow rate utilization of the memory bus. Forwarding is handled invisibly to the processor, via the memory fabric, and thus removes that third traditional movement of the data across the memory bus.

**[0308]** The single direction of traffic flow through the device **900** allows network processors **906**A, **906**B, **906**C, **906**D to be able to process data flows faster than originally intended. This is due to the fact that most processors are constrained by bus saturation. Take the IXP1200 for example, the SDRAM bus is a 6.6 Gbps bus with saturation around 5 Gbps. The IX Bus (data bus) is a 6 Gbps bus with saturation around 4.1 Gbps. To understand traffic levels that can be achieved one should take the worst case traffic flow, which is generally small packets at highest flow rate, to calculate what can be processed. The SDRAM would limit a traditional environment to 1.66 Gbps and the IX Bus would limit at 2 Gbps. These are maximums and headroom should be preserved. This estimate would suggest that Gigabit Ethernet would be the most an IXP1200 could attain. By using the network processor **906**A, **906**B, **906**C, **906**D uni-directionally, OC-48 requires only 2.5 Gbps on the data bus and no more that 5 Gbps on the memory bus. This allows existing devices to process faster than originally intended. Additionally, since the packets are moved around less, no processor is required to forward the packets which frees up more internal micro-engines for processing the packet.

**[0309]** This same approach can utilize the newer network processors **906**A, **906**B, **906**C, **906**D being developed to handle OC-48 and faster networks to be able to process packets at speeds up to OC-192 (10 Gbps) and faster. This can be done with external memory versus internal memory. This is a significant issue since internal memory requires a far more complex design of a network processor, increasing design time, reducing yields and increasing costs.

**[0310]** As can be seen, the preferred packet interception device implements scalable, transparent and non-invasive interception of packets for multiple devices. It is therefore intended that the foregoing detailed description be regarded as illustrative rather than limiting, and that it be understood that it is the following claims, including all equivalents, that are intended to define the spirit and scope of this invention.

We claim:

**1**. A method of transparently provisioning first and second services to a network, the first service being provided by a first application service provider to the network via a first application and the second service being provided by a second application service provider to the network via a second application, the network carrying a plurality of packets each being transmitted by a source to at least one intended destination intended by the source, each of the plurality of packets comprising routing data operative to cause the forwarding of the packet via the network towards the at least one intended destination, the method comprising:

interfacing between the first application and an interface to the network;

interfacing between the second application and the interface to the network;

intercepting, via the interface, each of the plurality of packets prior to a forwarding thereof toward the at least one intended destination;

evaluating each intercepted packet based on a first specification of a first subset of the plurality of packets with respect to which the first application is to perform the first service and a second specification of a second subset of the plurality of packets with respect to which the second application is to perform the second service, wherein at least the first specification specifies the first subset based on criteria other than only the routing data contained in the intercepted packet; and

acting on the intercepted packet, based on the evaluating, to facilitate the performance of at least one of the first service, second service or a combination thereof with respect to the intercepted packet if the intercepted packet is included in at least one of the specified first subset, second subset, or combination thereof.

**2**. The method of claim **1** wherein the acting comprises at least one of providing at least a copy of at least a portion of the intercepted packet to at least one of the first and second applications, deleting the intercepted packet, modifying the intercepted packet, substituting a modified intercepted packet for the intercepted packet, substituting a new packet for the intercepted packet, allowing the intercepted packet to continue to the at least one intended destination, or combinations thereof.

**3**. The method of claim **1** wherein the acting further comprises:

providing the intercepted packet to the first application if the intercepted packet is one of the specified first subset to facilitate the performance of the first service with respect to the intercepted packet and generate a result based thereon; and

providing the intercepted packet to the second application if the intercepted packet is one of the specified second subset to facilitate the performance of the second service with respect to the intercepted packet and generate a result based thereon.

**4**. The method of claim **3** further comprising:

receiving the result of the performance of at least one of the first and second services on the intercepted packet from at least one of the first and second applications; and

wherein the result comprises at least one of an instruction to delete the intercepted packet, an instruction to modify the intercepted packet, an instruction to substitute a modified intercepted packet for the intercepted packet, an instruction to substitute a new packet for the intercepted packet, an instruction to allow the intercepted packet to continue to the at least one intended destination, an instruction to respond to the source, or combinations thereof, and further wherein

the acting further comprises executing the instruction.

**5**. The method of claim **1** wherein the first service is the same as the second service, the first subset being different than the second subset.

**6**. The method of claim **1** wherein the first subset is different from the second subset.

**7**. The method of claim **1** wherein the acting further comprises providing the intercepted packet only to the first application when the intercepted packet is one of the first subset and one of the second subset.

**8**. The method of claim **1** wherein the interfacing further comprises interfacing between the first and second applications and the interface to the network without modifying layer 2 or layer 3 protocols of the interface to the network.

**9**. The method of claim **1** wherein the first service comprises one of a firewall service, content control service, malicious content detection service, anti-denial-of-service service, intrusion detection service, or combinations thereof.

**10**. The method of claim **1** wherein at least one of the source, at least one intended destination, or a combination thereof, are unaware of the interfacing, intercepting, evaluating and acting.

**11**. The method of claim **1** wherein the first application service provider is unaware of the interfacing, intercepting, and evaluating.

**12**. The method of claim **1** further wherein the first application service provider is unaware of the interfacing, intercepting and evaluating.

**13**. A system for transparently provisioning first and second services to a network, the first service being provided by a first application service provider to the network via a first application and the second service being provided by a second application service provider to the network via a second application, the network carrying a plurality of packets each being transmitted by a source to at least one intended destination intended by the source, each of the plurality of packets comprising routing data operative to cause the forwarding of the packet via the network towards the at least one intended destination, the system comprising:

a packet processor coupled between the network and first and second applications and operative to intercept at least one of the plurality of packets prior to a forwarding thereof toward the at least one intended destination, evaluate the at least one intercepted packet based on a first specification of a first subset of the plurality of packets with respect to which the first application is to perform the first service and a second specification of a second subset of the plurality of packets with respect to which the second application is to perform the second service, and act on the intercepted packet to facilitate the performance of at least one of the first service, second service, or combination thereof with respect to the intercepted packet if the intercepted packet is included in at least one of the specified first subset, second subset, or combination thereof, wherein at least the first specification specifies the first subset based on criteria other than only the routing data contained in the intercepted packet.

**14**. The system of claim **13** wherein the act comprises at least one of provide at least a copy of at least a portion of the intercepted packet to at least one of the first and second applications, delete the intercepted packet, modify the intercepted packet, substitute a modified intercepted packet for the intercepted packet, substitute a new packet for the intercepted packet, allow the intercepted packet to continue to the at least one intended destination, or combinations thereof.

**15**. The system of claim **13** wherein the packet processor is further operative to provide the at least one intercepted packet to the first application if the intercepted packet is one of the specified first subset to facilitate the performance of the first service with respect to the intercepted packet and generate a result based thereon; and provide the at least one intercepted packet to the second application if the intercepted packet is one of the specified second subset to facilitate the performance of the second service with respect to the intercepted packet and generate a result based thereon.

**16**. The system of claim **15** wherein the packet processor is further operative to receive the result of the performance of at least one of the first and second services on the intercepted packet from at least one of the first and second applications; and, wherein the result comprises at least one of an instruction to delete the intercepted packet, an instruction to modify the intercepted packet, an instruction to substitute a modified intercepted packet for the intercepted packet, an instruction to substitute a new packet for the intercepted packet, an instruction to allow the intercepted packet to continue to the at least one intended destination, an instruction to respond to the source, or combinations thereof, the packet processor being further operative to execute the instruction.

**17**. The system of claim **13** wherein the first service is the same as the second service, the first subset being different than the second subset.

**18**. The system of claim **13** wherein the first subset is different from the second subset.

**19**. The system of claim **13** wherein the packet processor is further operative to provide the intercepted packet only to the first application when the intercepted packet is one of the first subset and one of the second subset.

**20**. The system of claim **13** wherein the packet processor is capable of interacting with the first and second applications with the network without modifying layer 2 or layer 3 protocols of the network.

**21**. The system of claim **13** wherein the first service comprises one of a firewall service, content control service, mali-

cious content detection service, anti-denial-of-service service, intrusion detection service, or combinations thereof.

**22**. The system of claim **13** wherein at least one of the source, at least one intended destination, or a combination thereof, are unaware of the operations of the packet processor.

**23**. A system for transparently provisioning first and second services to a network, the first service being provided by a first application service provider to the network via a first application and the second service being provided by a second application service provider to the network via a second application, the network carrying a plurality of packets each being transmitted by a source to at least one intended destination intended by the source, each of the plurality of packets comprising routing data operative to cause the forwarding of the packet via the network towards the at least one intended destination, the method comprising:

means for interfacing between the first application and an interface to the network;

means for interfacing between the second application and the interface to the network;

means for intercepting, via the interface, each of the plurality of packets prior to a forwarding thereof toward the at least one intended destination;

means for evaluating each intercepted packet based on a first specification of a first subset of the plurality of packets with respect to which the first application is to perform the first service and a second specification of a second subset of the plurality of packets with respect to which the second application is to perform the second service, wherein at least the first specification specifies the first subset based on criteria other than only the routing data contained in the intercepted packet; and

means for acting on the intercepted packet, based on the evaluating, to facilitate the performance of at least one of the first service, second service, or combination thereof with respect to the intercepted packet if the intercepted packet is included in at least one of the specified first subset, second subset, or combination thereof.

**24**. A system for transparently provisioning first and second services to a network, the first service being provided by a first application service provider to the network via a first application and the second service being provided by a second application service provider to the network via a second application, the network carrying a plurality of packets each being transmitted by a source to at least one intended destination intended by the source, each of the plurality of packets comprising routing data operative to cause the forwarding of the packet via the network towards the at least one intended destination, the system comprising processor, a memory coupled with the processor, a network interface operative to couple the processor with the network, and an application interface operative to couple the processor with the first and second applications, the system further comprising:

first logic stored in the memory and executable by the processor cause the processor to intercept at least one of the plurality of packets prior to a forwarding thereof toward the at least one intended destination;

second logic, coupled with the first logic, stored in the memory and executable by the processor to cause the processor to evaluate the at least one intercepted packet based on a first specification of a first subset of the plurality of packets with respect to which the first application is to perform the first service and a second specification of a second subset of the plurality of packets with respect to which the second application is to perform the second service, wherein at least the first specification specifies the first subset based on criteria other than only the routing data contained in the intercepted packet; and

third logic, coupled with the second logic, stored in the memory and executable by the processor to cause the processor to act on the intercepted packet to facilitate the performance of at least one of the first service, second service, or combination thereof with respect to the intercepted packet if the intercepted packet is included in at least one of the specified first subset, second subset, or combination thereof.

* * * * *