US007263457B2

(12) **United States Patent**
White et al.

(10) **Patent No.: US 7,263,457 B2**
(45) **Date of Patent: Aug. 28, 2007**

(54) **SYSTEM AND METHOD FOR OPERATING COMPONENTS OF AN INTEGRATED CIRCUIT AT INDEPENDENT FREQUENCIES AND/OR VOLTAGES**

(75) Inventors: **Scott A. White**, Austin, TX (US); **William A. Hughes**, San Jose, CA (US); **Philip E. Madrid**, Round Rock, TX (US)

(73) Assignee: **Advanced Micro Devices, Inc.**, Sunnyvale, CA (US)

(*) Notice: Subject to any disclaimer, the term of this patent is extended or adjusted under 35 U.S.C. 154(b) by 0 days.

(21) Appl. No.: **11/325,054**

(22) Filed: **Jan. 3, 2006**

(65) **Prior Publication Data**

US 2007/0156370 A1 Jul. 5, 2007

(51) **Int. Cl.**
G01K 1/08 (2006.01)

(52) **U.S. Cl.** **702/132**

(58) **Field of Classification Search** 702/132
See application file for complete search history.

(56) **References Cited**

U.S. PATENT DOCUMENTS

6,901,303	B2 *	5/2005	Larson et al.	700/108
7,228,242	B2 *	6/2007	Read et al.	702/57
2003/0115013	A1 *	6/2003	Dendinger	702/132
2006/0161375	A1 *	7/2006	Duberstein et al.	702/132

* cited by examiner

Primary Examiner—John Barlow
Assistant Examiner—Jonathan Moffat
(74) *Attorney, Agent, or Firm*—Robert C. Kowert; Meyertons, Hood, Kivlin, Kowert & Goetzel, P.C.

(57) **ABSTRACT**

Multiple logic cores of integrated circuits and processors may be configured to operate at frequencies and voltages independently of each other. Additionally, other components, such as a common bridge configured to interface with the logic cores, may operate at a voltage and frequency independent of the voltage and frequency at which the logic cores are operating. The operating frequency and/or voltage of a logic core may be independently adjusted for various reasons, including power management and temperature control. Logic circuitry at an interface between the controller and the logic cores may translate logic signals from one voltage and/or frequency to another to enable communication between the bridge and the logic core when the two are operating at different voltages and/or frequencies.

32 Claims, 9 Drawing Sheets

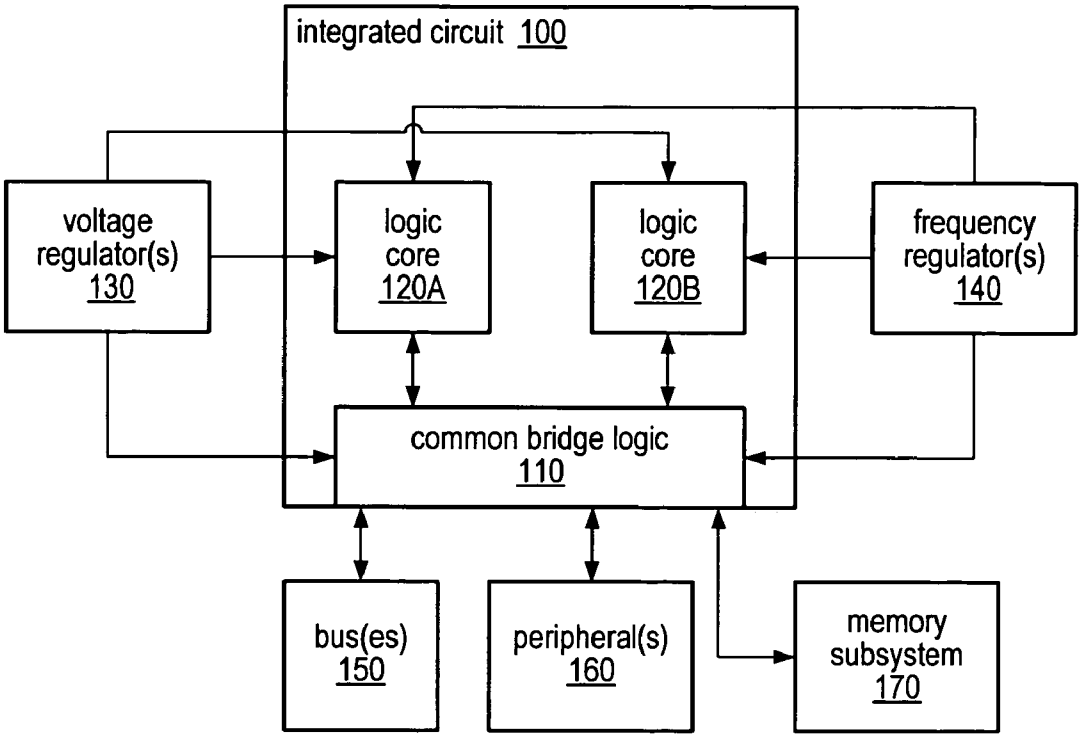

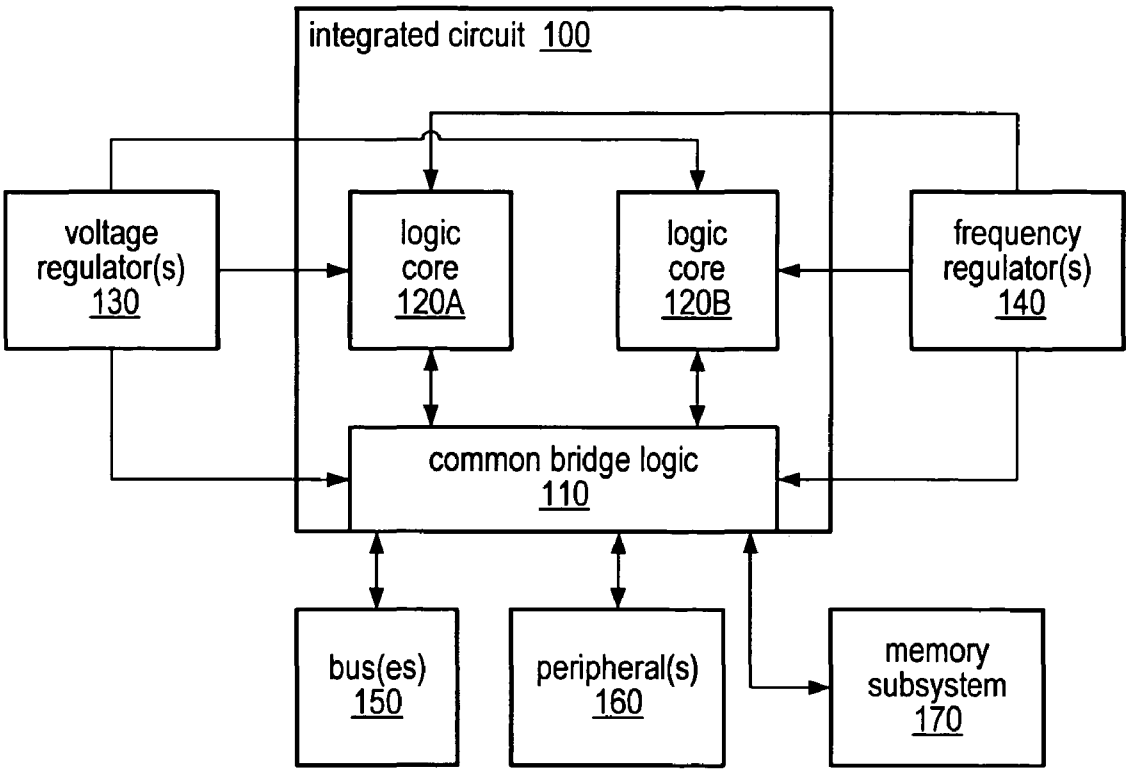
integrated circuit 100
voltage regulator(s) 130
logic core 120A
logic core 120B
frequency regulator(s) 140
common bridge logic 110
bus(es) 150
peripheral(s) 160
memory subsystem 170

FIG. 1

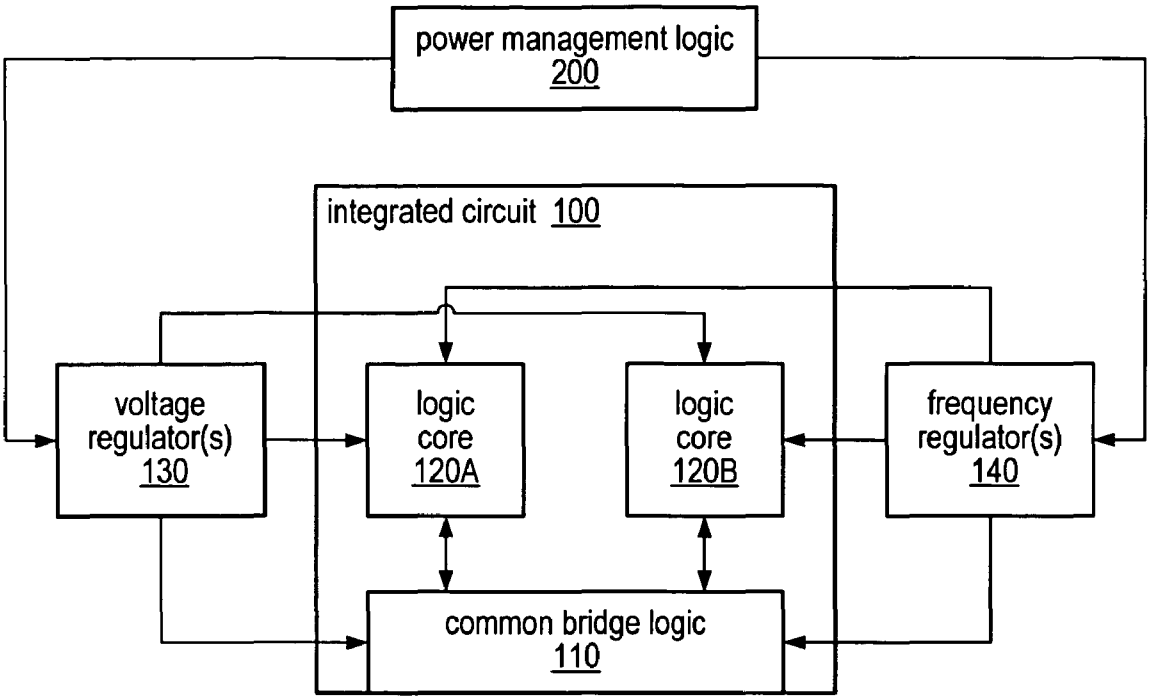
power management logic
200
integrated circuit 100
voltage
regulator(s)
130
logic
core
120A
logic
core
120B
frequency
regulator(s)
140
common bridge logic
110

FIG. 2A

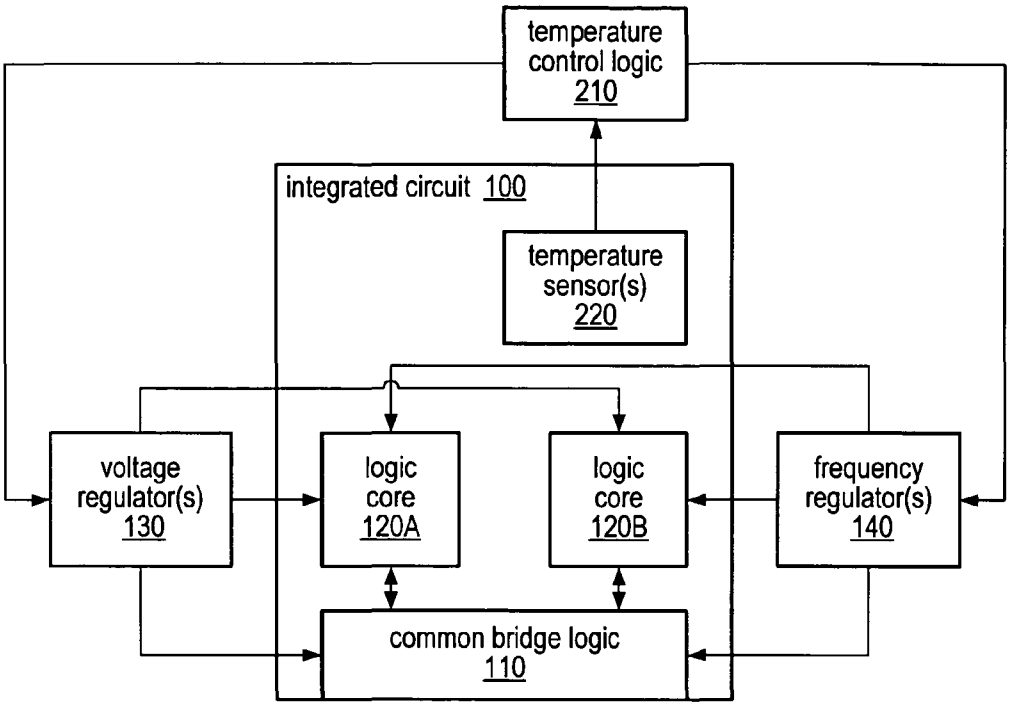
temperature control logic 210
integrated circuit 100
temperature sensor(s) 220
voltage regulator(s) 130
logic core 120A
logic core 120B
frequency regulator(s) 140
common bridge logic 110

FIG. 2B

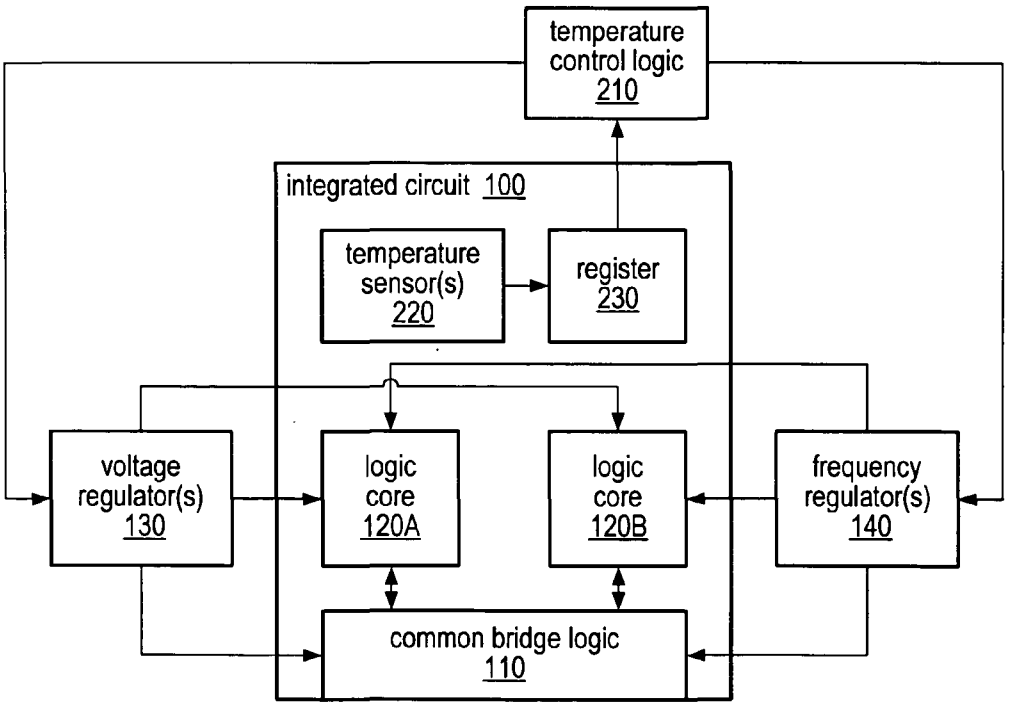
temperature control logic 210
integrated circuit 100
temperature sensor(s) 220
register 230
voltage regulator(s) 130
logic core 120A
logic core 120B
frequency regulator(s) 140
common bridge logic 110

FIG. 2C

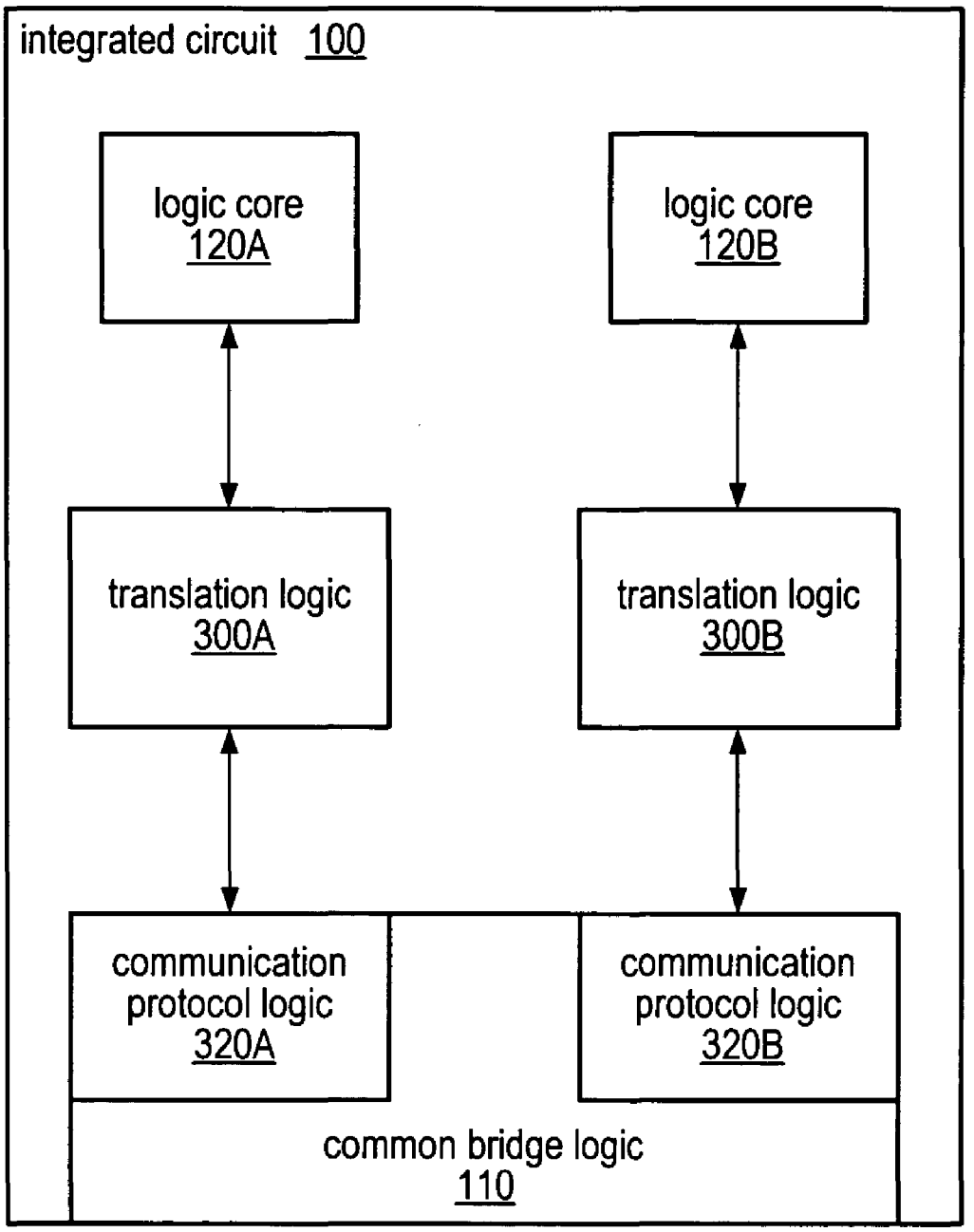
integrated circuit 100
logic core 120A
logic core 120B
translation logic 300A
translation logic 300B
communication protocol logic 320A
communication protocol logic 320B
common bridge logic 110

FIG. 3

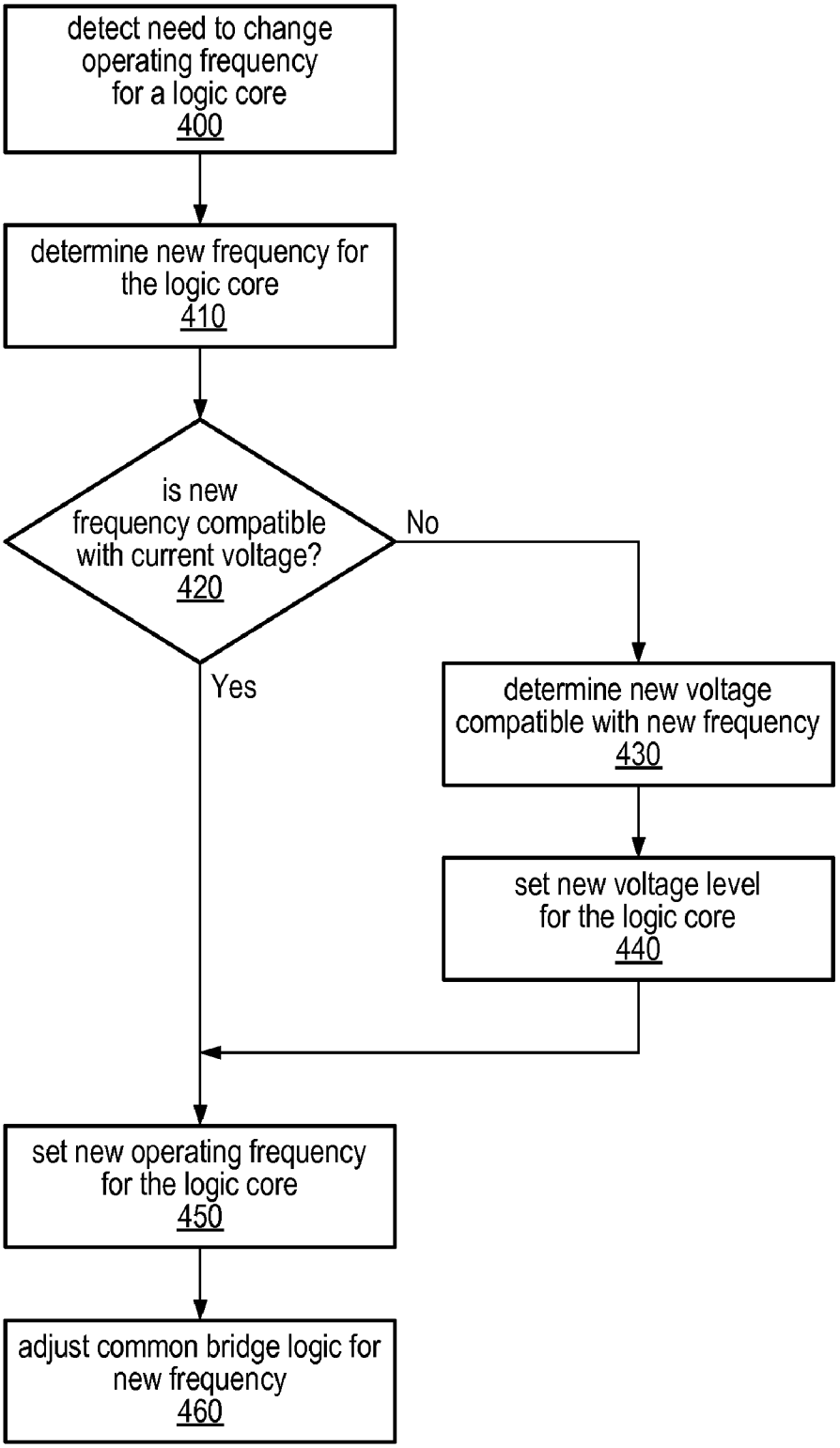
detect need to change operating frequency for a logic core 400
determine new frequency for the logic core 410
is new frequency compatible with current voltage? 420
No
Yes
determine new voltage compatible with new frequency 430
set new voltage level for the logic core 440
set new operating frequency for the logic core 450
adjust common bridge logic for new frequency 460

FIG. 4

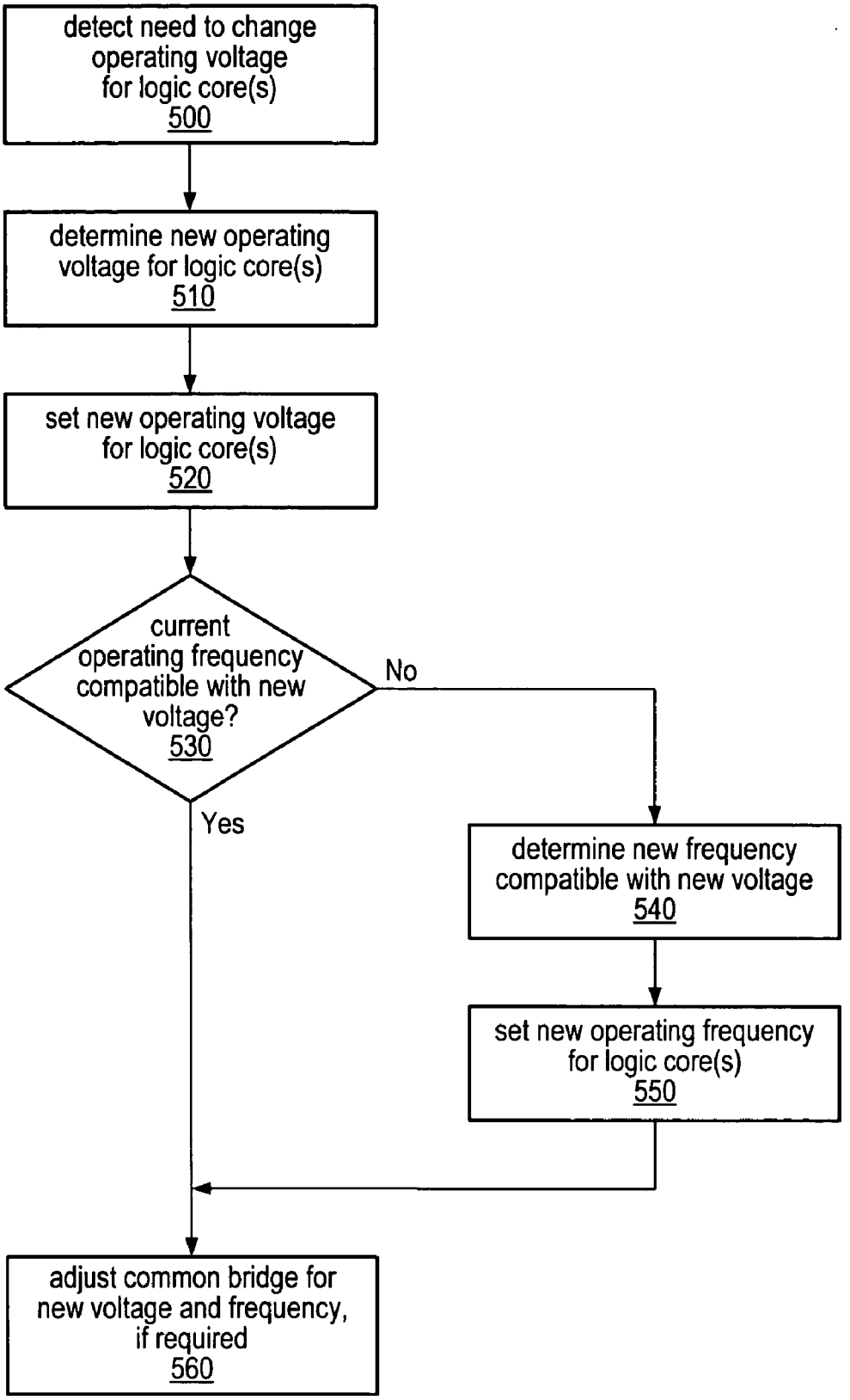
detect need to change operating voltage for logic core(s) 500
determine new operating voltage for logic core(s) 510
set new operating voltage for logic core(s) 520
current operating frequency compatible with new voltage? 530
No
Yes
determine new frequency compatible with new voltage 540
set new operating frequency for logic core(s) 550
adjust common bridge for new voltage and frequency, if required 560

FIG. 5

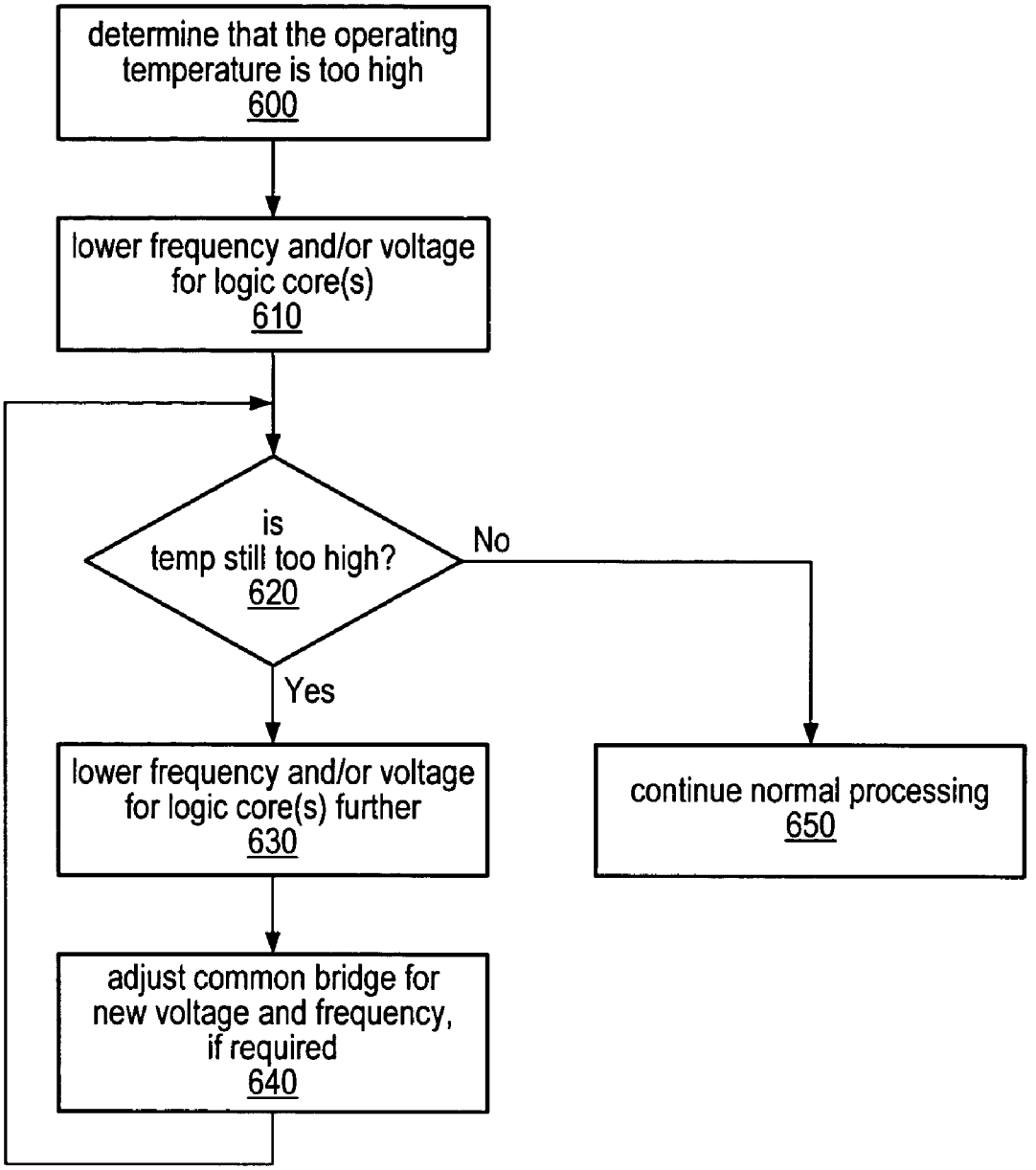
determine that the operating temperature is too high
600
lower frequency and/or voltage for logic core(s)
610
is temp still too high?
620
No
Yes
lower frequency and/or voltage for logic core(s) further
630
continue normal processing
650
adjust common bridge for new voltage and frequency, if required
640

FIG. 6

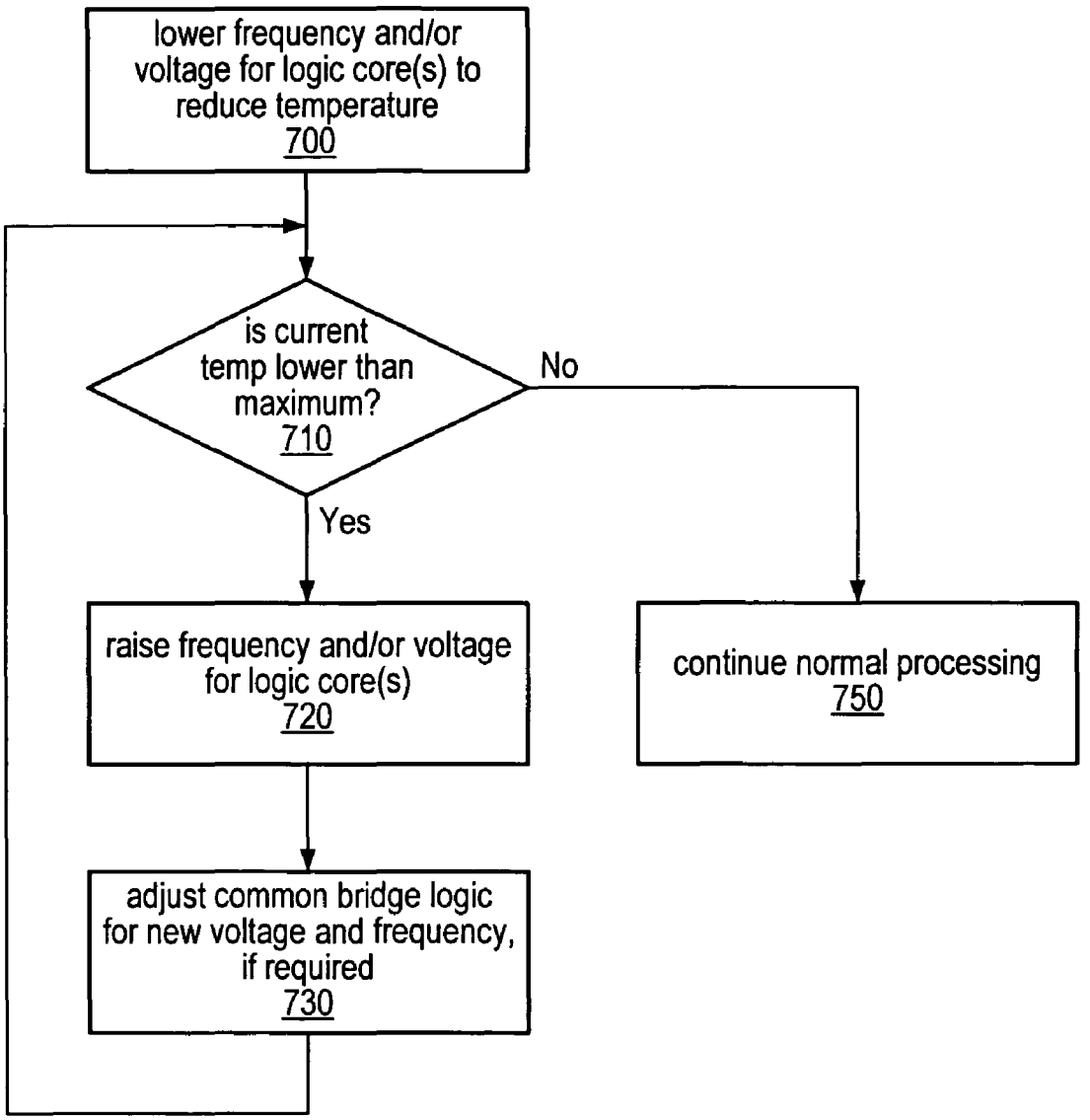
lower frequency and/or voltage for logic core(s) to reduce temperature
700
is current temp lower than maximum?
710
No
Yes
raise frequency and/or voltage for logic core(s)
720
continue normal processing
750
adjust common bridge logic for new voltage and frequency, if required
730

FIG. 7

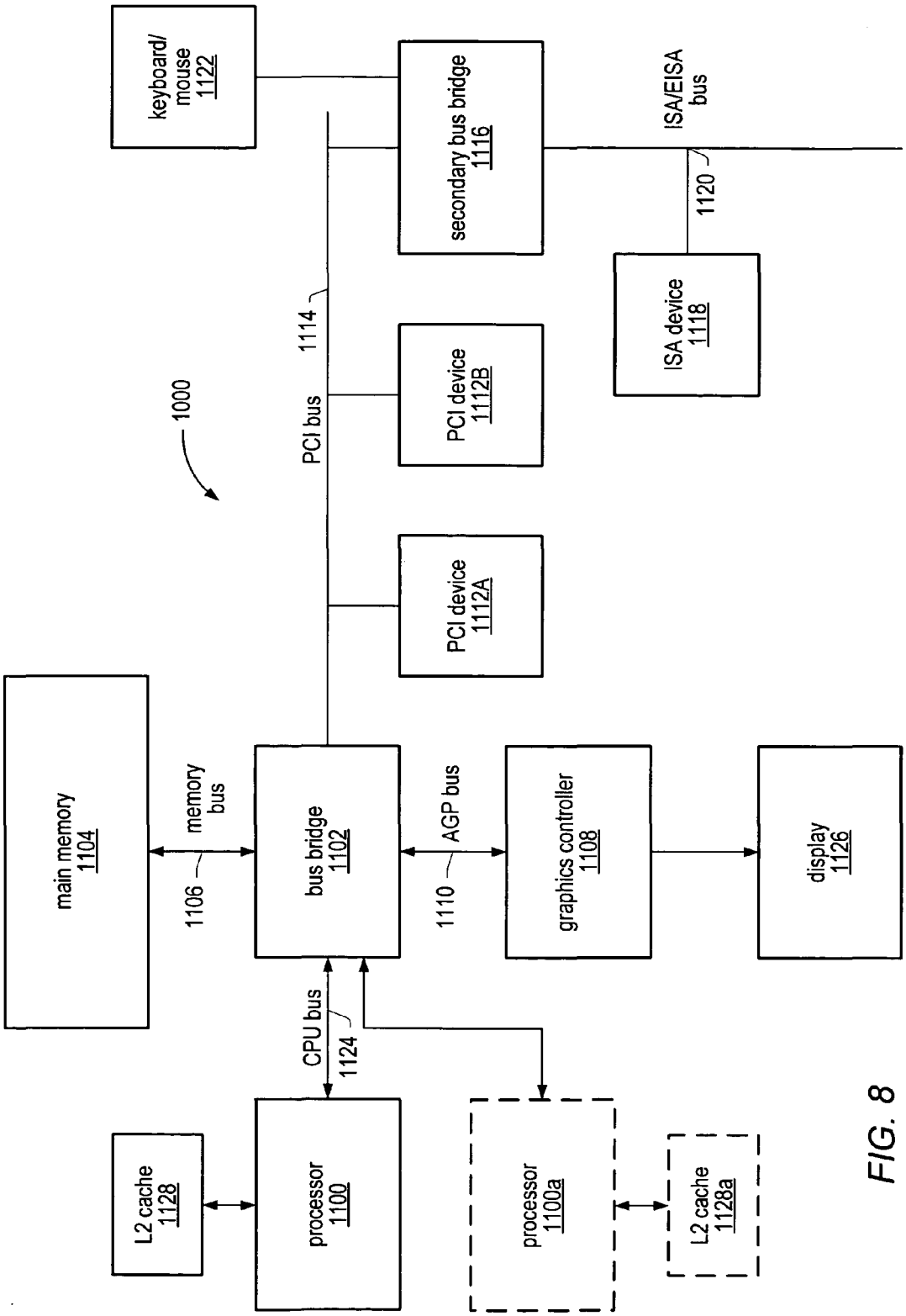
1000
keyboard/ mouse 1122
secondary bus bridge 1116
ISA/EISA bus
1120
ISA device 1118
1114
PCI bus
PCI device 1112B
PCI device 1112A
main memory 1104
memory bus
1106
bus bridge 1102
AGP bus
1110
graphics controller 1108
display 1126
CPU bus
1124
L2 cache 1128
processor 1100
processor 1100a
L2 cache 1128a

FIG. 8

SYSTEM AND METHOD FOR OPERATING COMPONENTS OF AN INTEGRATED CIRCUIT AT INDEPENDENT FREQUENCIES AND/OR VOLTAGES

BACKGROUND OF THE INVENTION

1. Field of the Invention

This invention is related to the field of integrated circuits, and more particularly to the operation of and communication between elements of an integrated circuit operating at independent frequencies and/or voltages.

2. Description of the Related Art

Typically, the regulation of operating voltage for integrated circuits, such as microprocessors, may be performed by circuitry located on the motherboard, external to the IC, due in part to requirements for large values of capacitance which may consume inordinate amount of real estate on an IC die. Power at the voltage level of the output of a voltage regulator may be supplied to the internal circuitry including the processor cores of the IC through several package pins. This may be done in part to reduce the current handling requirements for any given pin and/or traces leading thereto. Generally, the supply lines may be internally connected so that the cores and other elements operate at a common voltage level.

Typically, complex logic core designs produce large quantities of heat at certain points within the IC, esp. at high clock frequencies. The packaging of an IC along with the device and system cooling mechanisms may determine the maximum frequency at which the IC may operate without exceeding its specified maximum operating temperature at the points where heat generation is most pronounced. An IC manufacturer may specify a maximum package temperature for a specific device at which it will continue to function both correctly and reliably.

Since complex ICs such as microprocessors tend to be expensive, it is typically desirable to protect them from damage due to overheating. Temperature sensors are often located in various places within systems containing complex ICs to measure the ambient temperature at that position. Due to the method commonly used to incorporate complex ICs into systems such as soldering to a motherboard or socketing to a motherboard, and the direct attachment of heat sinks and/or other cooling apparatus to the chips, temperature sensors are generally found in locations other than the IC itself. Therefore, the temperature of the IC package must commonly be extrapolated from an actual temperature measurement at some point remote from the surface of the IC. The resulting case temperature estimate may be significantly above the actual temperature of the IC if conservative algorithms are used to perform the estimation.

A typical system may use the estimated package temperature of the IC to control power to the entire system or at least to the IC. For example, the output of the temperature sensor may be compared to a "trip point" value, and when this value is reached, a signal may be generated that causes the system power supply to shut down. Such a system may indeed protect the IC, but may also inconvenience the user who is frequently given no advanced warning that a shut down is forthcoming and who may have entered significant amounts of data without recently saving it to persistent storage. Also, as noted above, all such shut downs may not be necessary since the mechanism may activate based on a conservative estimate of the actual temperature of the chip.

To reduce the potential for user data loss, systems may employee a second trip point circuit configured to trigger at

a temperature somewhat lower than the shut down temperature. In such a system, the lower temperature circuit may be used to initiate action that would inform the user that a system shutdown is imminent, and that he should take appropriate actions to secure any unprotected data. While this scheme may help protect user data, it may also produce a significant nuisance if temperatures wander into the range between trip points without actually reaching the shutdown point. In any case once the shutdown limit has been reached, the user is without the use of his system until such time that it cools down sufficiently and can be restarted.

SUMMARY

A processor or other integrated circuit may include multiple logic cores, each of which may be configured to operate at frequencies and voltages independently of the other logic cores, according to one embodiment of the present invention. In other words, each logic core of a processor may be configured to operate at a particular voltage and frequency regardless of whether other logic cores in the processor are also operating at the same voltage and/or frequency. The operating voltage and frequency of the logic cores in such a multi-core integrated circuit may be adjusted for various reasons, including power management and temperature management. For instance, one or more of the cores of a processor may be adjusted to operate at a lower frequency and/or voltage in order to save power in certain situations. Also, rather than simply shutting down a processor that is operating too warmly (as is generally done in the prior art), one or more of the logic cores in the processor may be adjusted to operate at a lower frequency and/or voltage so that the processor may generate less heat, and therefore may cool down to an acceptable operating temperature. For example, the processor, or other integrated circuit, may have a predetermined maximum operating temperature, above which the performance of the processor may be erratic or above which damage to the processor may potentially occur. If a current temperature for the processor is determined to be at, above, or near such a maximum operating temperature, one or more logic cores of the processor, or other integrated circuit, may be adjusted to operate at a lower frequency and/or voltage in order to lower the operating temperature of the processor.

Additionally, a processor or other integrated circuit may also include bridging, routing, or other common logic circuitry that may communicate or interface to the logic cores of the processor. For example, a Northbridge is a common component of many processors and may include separate interfaces to communicate with and route communication from multiple logic cores of an integrated circuit to other sub-systems, components or peripherals external to the integrated circuit. When multiple cores of a single processor are configured to operate at independent frequencies and voltages, such common bridge logic may be configured to communicate with each logic core using a different voltage level and/or clock frequency. Thus, adjusting voltages and frequencies used by common bridge logic may be included as part of changing the operating characteristics (i.e. voltage and frequency) of the logic cores in a multi-core integrated circuit. In addition, the common bridge logic may be configured to operate at voltages and frequencies independent of current operating voltages and frequencies of the logic cores. In other words, the common bridge logic may be configured to operate at a frequency and voltage different from any particular voltage or frequency at which the individual logic cores may be currently operating.

In some embodiments, an integrated circuit, such as a microprocessor, may include temperature sensors configured to determine and/or report the current operating temperature for the processor. In some embodiments, an integrated circuit may include multiple temperature sensors, such as one sensor for each of the logic cores, in order to provide individual or localized operating temperatures for various regions of the processor. For instance, in one embodiment it may be possible to reduce the operating voltage and/or frequency of a specific one of the multiple logic cores in order to reduce the temperature of a determined "hot spot" on the processor, based upon temperature measurements for various regions, such as for each individual logic core, of the processor. In other embodiments, however, only a single operating temperature may be measured for the integrated circuit as a whole, or alternatively, individual temperature measurements for different regions of the processor may be averaged or aggregated to determine a single, overall, operating temperature for the processor.

In some embodiments, the operating voltage and/or frequency of all of the logic cores of the processor may be reduced together, such as to lower the operating temperature of the processor or to reduce the overall power consumption of the processor. In other embodiments, the operating voltage and/or frequency for an individual logic core may be reduced. For example, when a higher than optimal operating temperature is detected for the processor, only one of multiple logic cores may be adjusted to operate at a lower voltage and/or frequency in order to reduce the overall operating temperature of the processor. If, in such an example, lowering the operating voltage and/or frequency of a single logic core does not reduce the overall operating temperature for the processor enough, the operating voltage and/or frequency for additional logic cores may be reduced in order to lower the operating temperature for the processor even more.

In another example, if the power consumption of an integrated circuit is higher than preferable, the operating voltage or frequency of a single one of the logic cores in the processor may be reduced in order to lower the overall power consumption of the processor. If required (or desired) the operating voltage and/or frequency for others of the logic cores may also be reduced, either at the same time or subsequently, in order to lower the overall power consumption even more. In some embodiments, the choice of which logic core to adjust or the order in which to reduce the operating voltage and/or frequency of multiple logic cores may be selected randomly. In other embodiments, however, the selection of which logic core should be adjusted to operate at a lower voltage and/or frequency may be based on other factors, such as the intended purpose of the logic core, or the location of the logic core within the processor, etc.

Since the operating frequency of a logic core is related to the operating voltage of that logic core, when an operating voltage for a logic core is adjusted, such as to lower the operating temperature, the operating frequency for the logic core may also be adjusted. For example, if the operating voltage of a logic core is reduced to a level incompatible with the current operating frequency, the operating frequency of the logic core may also be reduce accordingly.

In addition, when the operating voltage and/or frequency is adjusted for one or more logic cores in an integrated circuit, the operating frequency and/or voltage of a common bridge, interface, or other component that interfaces with the logic cores of the processor may also be adjusted, in some embodiments. For instance, if a common bridge interfaces with each of the logic controllers, a frequency and/or voltage for the common bridge, or just a portion of the common bridge, may be adjusted when the operating voltage and/or frequency of one of the logic cores is changed. In some embodiments, a single common bridge, such as a Northbridge, may be configured to interface with multiple logic cores of a processor or other integrated circuit, and the operating voltage and/or frequency of the common bridge may be adjusted so as to be compatible with the operating voltage and/or frequency of each of the elements it interfaces with.

For example, a common bridge may include multiple ports or interfaces, each of which may communicate with a different one of multiple logic cores of a processor and the operating frequency and/or voltage of each of the ports may be adjusted so as to be compatible with the operating voltage and/or frequency of respective logic core that the particular port communicates with, in one embodiment. In other embodiments, a single, overall operating voltage and/or frequency for a common bridge may be adjusted so as to be compatible with the operating voltages and/or frequencies of all the logic cores of the processor. For instance, the operating frequency of a controller may be adjusted to be higher than the current operating frequencies of all the logic cores in the processor. In some embodiments, the operating frequency of the controller may be adjusted to be an integer multiple of the operating frequency of one or more of the logic cores. In other embodiments, the operating frequency of the controller may be adjusted to be higher than, without necessarily being a multiple of, the operating frequency of the logic cores.

In some embodiments, a multi-core processor may also include circuitry configured to translate data and/or control signals communicated between a common bridge and one or more of the logic cores when the common bridge and logic cores are operating at different voltages and/or frequencies. For instance, the processor may include voltage translation circuitry configured to adjust the voltage level used for one or more communication signals or lines between the common bridge and a logic core of the processor. Additionally, the processor may, in some embodiments, include circuitry configured to translate data communicated between the common bridge and a logic core operating at different frequencies. In yet other embodiments, the logical protocol used when communicating between a common bridge interface and a logic core may be designed and/or configured to take into account a difference in frequency, and thus a difference in clock timings, for the communication between the common bridge interface and the logic core.

In some embodiments, a system including a multi-core processor, or other multi-core integrated circuit, including multiple logic cores, each configured to operate at voltages independently of each other, may also include one or more voltage regulators configured to supply a range of voltages to the logic cores of the processor. In one embodiment, such a system may include individual voltage regulators for each logic core of the processor. In other embodiments, however, the system may include only a single voltage regulator configured to deliver a range of voltages to the processor, but the system may also include circuitry configured to split and/or divide a single voltage signal from the voltage regulator and deliver individual voltage signals, which each may represent a different voltage, to different logic cores of the processor. In some embodiments, the voltage regulator and any voltage signal dividing and voltage translation circuitry may reside in, or be part of, the processor, while in other embodiments, the voltage regulator and any accompanying signal dividing or translation circuitry may be

external to the processor. In yet additional embodiments, the voltage regulator or regulators may be external to the processor while some or all of any accompanying signal dividing or translating circuitry may be part of the processor.

Similarly, a system including an multi-core integrated circuit that includes multiple logic cores configured to operate at frequencies independently of each other may also include one or more clock signal generators configured to supply a range of clock or frequency signals to the processor either as part of or external to the processor. As with the voltage regulators and any accompanying signal dividing or adjusting circuitry discussed above, clock generators and accompanying signal dividing or translating circuitry may reside as part of, external to, or a combination of internal to and external to, the processor, according to various embodiments.

In some embodiments, the logic circuitry or firmware configured to control the operating voltage and frequency of logic cores and/or communication controllers may reside in the processor itself. In other embodiments, however, such circuitry or firmware may reside external to the processor but may be configured to interface with various elements in the processor, such as logic cores and/or a communication controller.

BRIEF DESCRIPTION OF THE DRAWINGS

FIG. **1** is a block diagram illustrating an integrated circuit including multiple logic cores configured to operate at independent voltages and/or frequencies, according to one embodiment.

FIG. **2**A is a block diagram illustrating one embodiment of a multi-core integrated circuit in which the operating voltages and/or frequencies for each of multiple logic cores are controlled by power management logic.

FIG. **2**B is a block diagram illustrating temperature control logic configured to adjust the operating voltages and/or frequencies for logic cores of a multi-core integrated circuit, according to one embodiment.

FIG. **2**C is a block diagram illustrating temperature control software configured to adjust the operating voltages and/or frequencies for logic cores of a multi-core integrated circuit, according to one embodiment.

FIG. **3** is a block diagram illustrating, according to one embodiment, a multi-core integrated circuit including voltage and/or frequency translation logic.

FIG. **4** is a flowchart illustrating one embodiment of a method for independently adjusting the operating frequency for logic cores of a multi-core integrated circuit, according to one embodiment.

FIG. **5** is a flowchart illustrating one embodiment of a method for independently adjusting the operating voltage for logic cores of a multi-core integrated circuit.

FIG. **6** is a flowchart illustrating one embodiment of a method for reducing the operating temperature of a multi-core integrated circuit via independently adjusting the operating voltage and/or frequency for the logic cores of the integrated circuit.

FIG. **7** is a flowchart illustrating one embodiment of a method for increasing the operating temperature of a multi-core integrated circuit via independently adjusting the operating voltage and/or frequency for the logic cores of the integrated circuit.

FIG. **8** is a block diagram illustrating one embodiment of a computer system capable of implementing independent adjustment of operating characteristics of logic cores of a multi-core integrated circuit.

While the invention is susceptible to various modifications and alternative forms, specific embodiments thereof are shown by way of example in the drawings and will herein be described in detail. It should be understood, however, that the drawings and detailed description thereto are not intended to limit the invention to the particular form disclosed, but on the contrary, the intention is to cover all modifications, equivalents, and alternatives falling within the spirit and scope of the present invention as defined by the appended claims. Note, the headings are for organizational purposes only and are not meant to be used to limit or interpret the description or claims. Furthermore, note that the word "may" is used throughout this application in a permissive sense (i.e., having the potential to, being able to), not a mandatory sense (i.e., must). The term "include" and derivations thereof mean "including, but not limited to." The term "connected" means "directly or indirectly connected," and the term "coupled" means "directly or indirectly coupled."

DETAILED DESCRIPTION OF EMBODIMENTS

Processors or other integrated circuits may include multiple logic cores configured to operate at independent voltage levels and frequencies. Additionally, a processor or integrated circuit may include a common bridge or interface unit configured to communicate with various elements of the processor, including one or more of the logic cores. Such a common bridge unit, interface unit, or other component configured to communicate with logic cores operating at independent voltages and/or frequencies may also be configured to communicate with elements external to the processor, such as memory, additional communications busses, and/or other peripherals. A system with one or more multi-core processors that each include multiple, independently controllable (as to operating voltage and frequency) logic cores may be configured to automatically adjust the operating voltage and/or frequency of one or more of the logic cores for power management or to control the operating temperature of the system.

For example, FIG. **1** is a block diagram illustrating a system that includes a multi-core integrated circuit **100**, according to one embodiment. As noted above, an integrated circuit may include multiple logic cores, such as logic cores **120**A and **120**B each of which may be configured to operate at an independent voltage and frequency. In other words, each logic core may operate at a voltage and/or frequency independently from the voltage and/or frequency at which other logic cores, such as logic core **120**B, may operate. While FIG. **1** depicts integrated circuit **100** including two logic cores, other embodiments may involve integrated circuits or multi-core processors that include additional logic cores. In some embodiments integrated circuit **100** may represent a multi-core processor and logic cores **120**A and **120**B may represent processor cores that execute instructions supplied to integrated circuit **100**. In general the systems, methods and techniques described herein may be applied to systems or devices that include any number of logic cores configured to operate at independent voltages and/or frequencies. For example, a processor may include multiple logic cores, or processor cores, configured to operate at frequencies and voltages independently of each other, according to some embodiments. In other embodiments, an integrated circuit may include two or more logic cores that each may be configured to operate at frequencies and voltages independent of the frequencies or voltages that the other logic cores, or other components, may be operating.

Additionally, as illustrated in FIG. **1**, a multi-core integrated circuit or processor may include a common bridge or interface unit, such as common bridge logic **110**, configured to communicate with the logic cores as well as with other elements or peripherals either internal or external to integrated circuit **100**, such as bus **150**, peripheral **160** and/or memory subsystem **170**. In some embodiments, common bridge logic **110** may be configured to operate at a voltage or frequency different from, and independent of, the voltages or frequencies at which the logic cores **120**A and **120**B are operating. In some embodiments, the voltage and frequency at which common bridge logic **110** operates may be related to, or dependent upon, the voltage and/or frequency at which the logic cores **120**A and **120**B operate. For instance, in some embodiments, common bridge logic **110** may always operate at a frequency at least as high as, and possible higher than, the highest frequency at which any of logic cores **120**A and **120**B may currently be operating. As the frequency at which a logic core operates is generally related to the voltage level at which the logic core operates, in some embodiments, the frequencies at which logic cores **120**A and **120**B operate may depend upon the voltage at which they operate.

Additionally, in some embodiments, a system including one or more multi-core integrated circuits may also include one or more voltage regulators, such as voltage regulator **130** configured to supply a range of voltages to the integrated circuit and, in some embodiments, may be configured to supply independent voltages to each logic core of the integrated circuit. In addition, in some embodiments, voltage regulator **130** may also supply a range of voltages to common bridge logic **110**. Similarly, a system including one or more multi-core integrated circuits may also include one or more frequency regulators, such as frequency regulator **140**, configured to supply clock frequency signals to logic cores, such as logic cores **120**A and **120**B. In some embodiments, frequency regulator **140** may also be configured to provide clock frequency signals to common bridge logic **110**. Frequency regulator **140** may include any of various sorts of clock sources, such as an oscillator or phase locked loop (PLL) to generate a reference clock signal. Additionally, in some embodiments, frequency regulator **140** may include clock trees or other circuitry configured to split or divide a clock signal into multiple individual signals and may include multiple clock sources in order to supply multiple, independent clock signals of different frequencies.

In some embodiments, a common bridge, interface unit, or other common bridging logic, such as a Northbridge, may be controlled by a separate voltage regulator and/or frequency generator. According to some embodiments, allowing a common bridge that interfaces to multiple logic cores to operating at a voltage and/or frequency independent from each of the logic cores may allow the cores to operate at a lower voltages and frequencies while operating the common bridge at a higher voltage and/or frequency than the logic cores, thereby minimizing any potential bottlenecking at the common bridge. By allowing the common bridge to operate at a higher frequency that the cores may also allow the common bridge to communicate with each core at the core's respective frequency by communicating at a frequency that is a divider of the main operating frequency of the common bridge, thereby preventing the need to supply multiple frequencies to the common bridge.

Frequency regulator **140** may be configured to supply one or more voltages to common bridge logic **110**, according to some embodiments. For instance, common bridge logic **110** may be configured to interface with each of the logic cores **120** in integrated circuit **110** and thus may be supplied, such as from voltage regulator **130**, with one or more voltages. Similarly, in some embodiments, frequency regulator **140** may be configured to supply one or more frequency or clock signals to common bridge logic **110**. Common bridge logic **110** may be configured to interface with a logic core using the same logic levels and/or clock timing as the logic core and thus, may be supplied with multiple voltages and/or frequencies in order to allow common bridge logic **110** to communicate with each logic core using individual voltages and clock timings with each respective logic core. Alternatively, in some embodiments, common bridge logic **100** may be configured to receive only a single voltage and/or a single frequency signal. In such embodiments, common bridge logic **110** may be configured to interface with an individual logic core even though the logic core may be operating at a different voltage level or at a different frequency than common bridge logic **110**. For instance, common bridge logic **110** may be supplied with a voltage that is at least as high as the voltage of logic core **120**A and may similarly be supplied with a frequency or clock signal at least as fast as the current operating frequency of logic core **120**A and the interface between common bridge logic **110** may be configured to translate the communication, such as the signals on one or more control lines, between the different logic levels and/or between the different frequencies between common bridge logic **110** and logic core **120**A.

In one embodiment, each logic core **120** and common bridge logic **110** may receive a respective supply voltage and clock independent from one another. For example, a number of different voltages may be generated and/or regulated and input to integrated circuit **100** through various connections. Alternatively, a single voltage may be input to integrated circuit **100** and modified internally to produce the required voltages. Likewise, multiple clock signals at differing frequencies may be generated either off-chip or internally and coupled to individual logic cores **120** and/or common bridge logic **110**. In one embodiment, a clock signal at a single frequency may be coupled to logic cores **120** and each core may generate a specific internal operating frequency derived from this signal.

While the above discussion refers to independently controlling the operating voltages and/or frequencies for multiple logic cores in a multi-core processor, according to some embodiments, the systems, methods and techniques described herein for independently controlling operating voltages and/or frequencies may be applied to any integrated circuit or component that includes multiple areas or sections of circuitry configured to operate at independent operating voltages and/or frequencies. For instance, a controller, bridge or other components configured to interface to, or communicate with multiple components may be configured to independently control the frequency and or voltages of those interfaces. Additionally, the methods, techniques and system described herein may be applied to independently control the operating voltages and/or frequencies at which different portions of a single circuit or even a group of interfaced components in response a changing operating temperature for the circuit or group of components.

FIG. **2**A illustrates a block diagram representing one embodiments of a system including multi-core integrated circuit **100**. In the embodiment illustrated by FIG. **2**A, power management logic **200** may be configured to control the operating characteristics, such as the operating voltage and/or operating frequency, of each of multiple logic cores **120** of integrated circuit **110**. For example, FIG. **2**A may represent part of the circuitry for a battery powered computing device, such as a laptop, handheld computer, or PDA, that

may include power management logic **200**. In such an example, power management logic **200** may be configured to adjust the operating characteristics, such as the operating voltage and/or frequency for one or more of the multiple logic cores **120** of integrated circuit **100** in order to adjust the overall power consumption for integrated circuit **100**. For instance, in one embodiment, power management logic **200** may be configured to lower the operating characteristics of one or more of the logic cores **120** when the system is operating on battery power and may be also be configured to raise the operating characteristics of one or more of the logic cores **120** when the system is not operating on batter power. In other words, if the system is operating on battery power, power management logic **200** may be configure to adjust the operating frequency and/or voltage for one or more of the logic cores of integrated circuit **100** to lower levels in order to reduce the overall power consumption of integrated circuit **100**. In one embodiment, power management logic **200** may be configured to adjust the operating frequency and/or voltage of the logic cores of a multi-core processor, or other multi-core integrated circuit as part of other system-level power saving methods and techniques, such as reducing the brightness of a laptop display, shutting down wireless communication interfaces and CDROM or DVD drives.

In some embodiments, power management logic **200** may be configured to adjust the operating characteristics for one logic core to a lower level than the operating characteristics of another logic core depending upon the overall power consumption or depending upon the specific nature of the system. Additionally, in some embodiments, power management logic **200** may be configured to adjust the voltages and/or frequencies supplied to common bridge logic **110**. In one embodiment, power management logic **200** may adjust the voltages and/or frequencies supplied to common bridge logic **110** in step with the operating voltages and/or frequencies of the logic cores. In other embodiments, however, power management logic **200** may be configured to supply higher voltages and/or frequencies to common bridge logic **110** than to the logic cores. For example, in one embodiment, logic cores **120**A and **120**B may consume significantly more power than common bridge logic **110**, while at the same time, common bridge logic **110** may be more of a bottleneck to overall performance than any individual logic core (since common bridge logic **110** may interface and communicate with multiple logic cores and other elements, interfaces and components). In such an example, power management logic **220** may be configured to supply a higher voltage and frequency to common bridge logic **110** to reduce any potential bottlenecking of common bridge logic **110**, and therefore to help maintain a high overall performance, while supplying lower voltages and frequencies to the individual logic cores **120** to reduce overall power consumption.

In one embodiment, a logic core **120** may be configured to change its operating frequency in response to a request from power management logic **200**. For example, power management logic **200**, may determine that logic core **120**A is consuming power in excess of that allocated to it for a particular mode of system operation. In response to this determination, the power management logic **200** may issue a request to the logic core **120**A to alter its frequency of operation. In one embodiment, the logic core may generate its internal clock using a phase-locked loop (PLL) locked to an externally provided clock signal, such as may be provided by frequency regulator **140**. The internal operating frequency of the logic core may be a multiple of that of the external clock signal as determined by configuration parameters of the PLL. The PLL configuration parameters may be alterable by writing to one or more control registers, thus setting the internal operating frequency of the logic core. Each logic core of integrated circuit **100** may include a corresponding set of control registers through which its PLL configuration parameters may be set, according to some embodiments. Thus, in some embodiments, power management logic **200** may write to one or more control registers of integrated circuit **100** to adjust the operating frequency of one or more logic cores **120**.

As illustrated in FIG. **2**A, power management logic **200** may be coupled to, or otherwise interfaced to, voltage regulator **130** and frequency regulator **140** in order to adjust the operating voltages and frequencies for the logic cores **120** and/or for common bridge logic **110**. Thus, when adjusting the operating characteristics for logic core **120**A, power management logic **200** may be configured to communicate, such as via one or more control signals, with voltage regulator **130** to instruct voltage regulator **130** to supply a particular voltage to logic core **120**A. Similarly, power management logic **200** may be configured to communicate with frequency regulator **140** to instruct frequency regulator **140** to supply a particular frequency or clock signal to logic core **120**A.

In some embodiments, power for each logic core **120** and/or common bridge logic **110** may be supplied through circuitry that is isolated from that which supplies power to the other logic cores within integrated circuit **100**. In this configuration, each logic core **120** and/or common bridge logic **110** may be operated at an independent voltage level that is different from the voltage levels at which other logic cores are operated. One or more voltage regulators, such as voltage regulator **130**, may be configured to supply voltage to each logic core **120** and/or common bridge logic **110** at a different level. Each voltage regulator supplying power to a portion of the IC **100** may be configured to receive requests to output power at one or more voltage levels and to adjust the voltage levels of its outputs in response to such a request. In one embodiment, logic cores **120** may be configured to issue such requests. For example, power management logic **200** may be configured to request voltage regulator **130** to change the voltage level supplied to one or more logic cores **120**. Power management logic **200** may be configured to determine the current output voltage levels for a logic core **120** by accessing data stored in configuration registers for voltage regulator **130**. Alternatively in other embodiments, a core that detects that it is operating at a certain temperature may request that the voltage regulator supplying its power change the supplied voltage level.

When adjusting the operating characteristics for a logic core **120** (or for common bridge logic **110**) power management logic **200** may be configured to determine a new target voltage. For example, in order to reduce the overall power consumption of integrated circuit **100**, power management logic **200** may determine a new operating voltage for logic core **120**A and/or logic core **120**B. Since, as noted above, the operating frequency for a logic core may be dependent upon a minimum operating voltage, power management logic **200** may be configured to determine whether the current operating frequency for a logic core is feasible, desirable, or compatible with the new operating voltage. If the current operating frequency for logic core **120**A is not compatible with or feasible at the new operating voltage for logic core **120**A, power management logic **200** may be configured to determine a new operating frequency in light of the new voltage. For example, power management logic may be configured to access a table of compatible or desirable

voltage-frequency pairs for use when adjusting the operating characteristics for logic cores.

Similarly, power management logic **200** may be configured to first determine a new operating frequency for a logic core when adjusting the operating characteristic for the logic core. Thus, in some embodiments, power management logic **200** may be configured to determine a new desired operating frequency for logic core **120**A and then determine whether the desired frequency is compatible with, or feasible at, the current operating voltage for logic core **120**A. For instance, power management logic **200** may be increasing the operating frequency for logic core **120**A, such as in response to determining that a system including integrated circuit **100** is no longer operating on battery power. If a desired operating frequency for logic core **120**A is not compatible with the current operating voltage for logic core **120**A, power management logic **200** may be configured to determine and new operating voltage for logic core **120**A that is compatible with the desired operating frequency. Alternatively, power management logic **200** may be configured to select a different desired frequency that is compatible with the current operating frequency of logic core **120**A, according to one embodiment.

As when adjusting the operating characteristics for logic cores, power management logic **200** may be configured to ensure that new frequencies and voltages are compatible with each other when adjusting the frequencies and/or voltages supplied to common bridge logic **110**. As noted above, common bridge logic **110** may be supplied with one or more voltages and one or more frequencies, according to various embodiments. As noted above, common bridge logic **110** may be configured to communicate or interface with each logic core **120** using different voltages and/or frequencies for each logic core, depending upon the individual operating characteristics of each logic core. Thus, in some embodiments, power management logic **200** may be configured to instruct voltage regulator **130** to supply multiple, independent voltage levels to common bridge logic **110**. Power management logic **200** may be configured to select the voltage level for each voltage signal supplied to common bridge logic **110**, according to some embodiments. In other embodiments, however, power management logic **200** may be configured to control the voltages supplied to the individual logic cores and rely upon common bridge logic **110** to coordinate with voltage regulator **130** to receive the appropriate voltages necessary to communicate with each logic core. Similarly, in some embodiments, power management logic **200** may be configured to control the frequency of individual clock signals supplied by frequency regulator **140** to common bridge logic, while in other embodiments, common bridge logic **110** may be configured to determine the particular frequencies required to communicate with each logic core and coordinate with frequency regulator **140** to receive one or more clock signals at appropriate frequencies.

Thus, various portions of the logic required to control the voltages and frequencies supplied to common bridge logic **110** may reside in power management **200**, voltage regulator **130**, frequency regulator **140** and/or common bridge logic **110**, according to various embodiments.

FIG. **2**B illustrates one embodiment of a multi-core integrated circuit for which the operating characteristics (i.e. operating voltage and frequency) for each of multiple logic cores may be controlled by temperature control logic. In some embodiments, integrated circuit **100** may include one or more temperature sensors, such as temperature sensor **220**, configured to measure the operating temperature of integrated circuit **100**. For example, in some embodiments, temperature sensor **220** may represent a thermal diode. Temperature sensor **220** may, in one embodiment, be incorporated into the die of integrated circuit **100** in proximity to an element of integrated circuit **100** that generates the most heat during normal operation. In another embodiment, multiple temperature sensors **220** may be incorporated into integrated circuit **100** near corresponding logic cores. Alternatively, in other embodiments, temperature sensor **220** may not be incorporated into integrated circuit **100**, but may be next to, adjacent to, or coupled to integrated circuit **100** such that it may measure an operating temperature for integrated circuit **100**. Such measurements of operating temperature indications may be used to request adjustments to core operating frequencies and voltages, as detailed below.

In one embodiment, temperature sensor **220** may be configured to measure an overall operating temperature of the entire integrated circuit **100**, while in other embodiments, temperature sensor **220** may be configured to measure a local operating temperature for a portion of integrated circuit **100**, such as a local operating temperature for logic core **120**A or logic core **120**B. A temperature sensor **220** may provide an indication of the temperature of the hottest portion of an associated IC element in some embodiments, while in others it may provide an indication of the average temperature of the element. In yet other embodiments, integrated circuit **110** may include more than one temperature sensor **220**, each configured to measure a local operating temperature for an individual area or region of integrated circuit **100**. Thus, in some embodiments, individual temperature measurements may be taken corresponding to each logic core in integrated circuit **100**. In other embodiments, however, integrated circuit **100** may not include a temperature sensor **220**, but the system of which IC **100** is a part may include a thermal sensor external to integrated circuit **100** that may be configured to measure or otherwise determine an operating temperature for integrated circuit **100**.

In one embodiment, a request to change the operating voltage and/or frequency of an IC component, such as logic cores **120**, may be generated in response to a change in the operating temperature of the component. For instance, temperature control logic **210** may be configured to read a current operating temperature for integrated circuit **100** and request a change in the current operating voltage and/or frequency of one or more logic cores **210**. The logic cores **120**, common bridge logic **110**, and/or other components included in the IC may have an associated temperature sensor **220**. In one embodiment, temperature sensor **220** may generate a control signal or interrupt in response to detecting a specified temperature or temperatures. In other embodiments, the temperature sensor **220** may provide an indication of the temperature of the associated component on a continual basis. As temperature sensors and other devices configured to measure operating or ambient temperatures, as well as methods and techniques for interfacing with such devices to read, collect, record, or measure temperatures are well understood in the art, they will not be discussed in detail herein.

In some embodiments, the operating temperature of integrated circuit **100** may be higher than a maximum, preferred, or otherwise specified operating temperature for integrated circuit **100**, above which incorrect, unpredictable or unreliable operation may occur. For instance, an IC manufacturer may specify a temperature range in which the IC may function properly for an indefinite period of time. This temperature range may include a maximum temperature beyond which proper functionality is not assured and dam-

age to the device may result. As described herein, one method of reducing the operating temperature of an IC may be to decrease the operating frequency and/or voltage of the components included in the device. In some embodiments, temperature control logic **210** may be configured to protect the operational integrity of integrated circuit **100**.

Thus, in some embodiments, logic circuitry, firmware, and/or software, either internal or external to integrated circuit **100**, such as temperature control logic **210**, may be configured to monitor the operating temperature of integrated circuit **100**. In various embodiments, temperature control logic **210** may be implemented in hardware, software, firmware, or a combination thereof. Temperature control logic **210** may be configured to automatically reduce the operating frequency and/or voltage of one or more logic cores in integrated circuit **110** in response to detecting or determining that integrated circuit **100**, or an individual logic core **120** of integrated circuit **100**, is operating at a temperature higher than a maximum, safe, preferred, or otherwise specified operating temperature. Temperature control logic **210** may, in some embodiments, be configured to access, interface with, or otherwise communicate with temperature sensor(s) **220** to determine a current operating temperature for integrated circuit **100** or for one or more logic cores in integrated circuit **100**, such as logic cores **120**A and **120**B.

If temperature control logic **210** determines that the operating temperature of integrated circuit **100** is too high, temperature control logic **210** may be configured to automatically adjust the operating voltage and/or frequency of one or more logic cores of integrated circuit **100**, such as logic core **120**A or logic core **120**B or both, according to different embodiments. For example, after determining that integrated circuit **100** is operating at a temperature higher than a specified operating temperature, temperature control logic **210** may configure logic core **120** to operate at a lower voltage and/or frequency in order to reduce the operating temperature of integrated circuit **110**. As with power management logic **200**, described above, temperature control logic **210** may, in some embodiments be configured to communicate or interface with voltage regulator **130** and frequency regulator **140** in order to adjust the voltages and frequencies supplied to logic cores **120**A and **120**B.

In some embodiments, temperature control logic **210** may reduce the operating frequency and/or voltage of all the logic cores in integrated circuit **100** at the same time. In other embodiments, however, temperature control logic **210** may initially reduce the operating voltage and/or frequency for a single logic core, such as logic core **120**A, but may reduce the operating voltage and/or frequency for additional logic cores, such as logic core **120**B, if the operating temperature for integrated circuit **100** does not become low enough after reducing the operating voltage and/or frequency of just one logic core. Accordingly, temperature control logic **210** may be configured to monitor, either continually or periodically, the operating temperature of integrated circuit **100** to determine whether a reduction in the operating characteristics, such as reducing the operating voltage and/or frequency of one or more logic cores in integrated circuit **100** results in a low enough operating temperature for integrated circuit **100**. Please note that the term "operating characteristics", is used herein to refer to an operating voltage or an operating frequency, or both.

If, after reducing the operating characteristics for one or more logic cores **120** in integrated circuit **100**, temperature control logic **210** determines that the operating temperature for integrated circuit **100** is still too high, temperature control logic may be configured to make an additional reduction in the operating characteristics for one or more logic core within integrated circuit **100**, according to some embodiments. For instance, temperature control logic **210** may initially reduce the operating characteristics of logic core **120**A and subsequently reduce the operating characteristics of logic core **120**B after determining that the reduction in the operating characteristics for logic core **120**A did not lower the operating temperature for integrated circuit **100** enough. Alternatively, in some embodiments, if the operating temperature of integrated circuit **100** is not low enough after reducing the operating characteristics of both logic cores **120**A and **120**B, temperature control logic **210** may reduce even further the operating characteristics for either logic core **120**A or **120**B or both. Thus, in some embodiments, temperature control logic **210** may be configured to reduce the operating characteristics for one or more of the logic cores in a multi-core processor in steps or stages until a desired or optimal operating temperature for integrated circuit **100** results.

Regarding FIG. **2**C, in one embodiment, temperature sensor **220** may be configured to periodically store a current operating temperature for processor **100** in register **230** within processor **100** and temperature control logic **210** may be configured to access register **230** to determine the current operating temperature for processor **100**. In some embodiments, temperature sensor(s) **220** may be configured to store multiple temperature measurements, each corresponding to an operating temperature for a different one of multiple logic or processor cores in IC **100**, using multiple registers or other data storage locations within, or external to, IC **100**. Please note that in some embodiments, temperature control logic **210**, and power management logic **200** may both be part of a single set of logic, implemented in hardware, firmware, software, or a combination thereof, that is configured to monitor and adjust the operating frequency and/or voltage of various portions of integrated circuit **100**, such as the logic cores **120** and common bridge logic **110**.

While the discussion above refers to reducing the operating characteristics for one or more logic cores in order to reduce the operating temperature or for power management reasons, the operating characteristic for one or more processor cores may be adjusted individually for other reasons. For instance, in some embodiments, the operating voltage and/or frequency of a individual logic core may be adjust independently of any other logic cores in a multi-core processor in order for that logic core to interface with or to a particular device or circuit at a particular voltage or speed while allowing another logic core of the same processor to operate at a different voltage and/or frequency. In general the devices, methods and techniques described herein may be utilized for adjusting the operating characteristics of logic cores in a multi-core environment independently for any number of reasons.

As noted above, multiple logic cores in a multi-core integrated circuit, such as logic cores **120**A and **120**B of integrated circuit **100** may communicate or interface with common bridge logic **110**, according to some embodiments. FIG. **3** is a block diagram illustrating one embodiment of an integrated circuit in which logic cores **120**A and **120**B communicate with common bridge logic **110** using translation logic and communication protocol logic. Since, as noted above, each logic core of a multi-core integrated circuit may be configured to operate at a voltage and/or frequency independent of the other logic cores, common bridge logic **110** may be configured to communicate with each logic core at an individual voltage and/or frequency. Thus, common

bridge logic **110** may include multiple sets of communication protocol logic **320**, such as communication protocol logic **320**A and **320**B, in order to communicate with different logic cores at independent voltages and frequencies. In some embodiments, the particular logical protocol implemented by communication protocol logic **320** may be configured to account for differences in clock timings in the communication with a logic core due to differences between the operating frequency of the logic core and the operating frequency of common bridge logic **110** and/or the operating frequency of communication protocol logic **320**A. For example, communication protocol logic **320**A may be configured to anticipate a longer delay when expecting communication signals from logic core **120**A if/when logic core **120**A is operating at a frequency that is slower than a frequency at which communication protocol logic **320**A and/or common bridge logic **110** may be operating.

Additionally, in some embodiments, integrated circuit **100** may include translation logic at the interface(s) between logic cores **120** and common bridge logic **110**. In some embodiments, such translation logic is configured to translate the voltage logic levels between the different voltages of logic cores **120** and common bridge logic **110**. For example, if logic core **120**A is operating at one voltage while common bridge logic **110** and/or communication protocol logic **320**A is operating at a different voltage, translation logic **300**A may be configured to translate the interface signals between the two logic levels. Similarly, translation logic **300**B may be configured to translate the logic levels of signals between communication protocol logic **320**B and logic core **120**B if/when logic core **120**B and communication protocol logic **320**B are operating at different voltages.

In some embodiments, translation logic may be configured to adapt, adjust or translate the interface signals between common bridge logic **110** and logic cores **120** to account for differences between the operating frequencies of common bridge logic **110** and logic cores **120**. In some embodiments, communication protocol logic **320**A may be configured to operate at a frequency independent of a frequency at which the remainder of common bridge logic **110** operates.

FIG. **4** is a flowchart illustrating one embodiment of a method for independent power management of one or more logic cores, according to one embodiment. As noted above, the operating characteristics, such as operating voltage and frequency, for multiple logic cores may be controlled independently for various reasons. A system including multiple logic cores may detect a need to change the operating frequency for a logic core, as illustrated by block **400**. For example, in one embodiment, power management logic **200** may detect a low power state and may attempt to reduce the operating frequency for one or more logic cores of a multi-core processor to reduce the overall power consumption of the system. In another embodiment, a system including a multi-core processor may be operating from battery power and power management logic **200** may be configured to detect when the system is operating on battery power and adjust the operating frequency of one or more of the logic cores. Additionally, power management logic **200** may be configured to detect when the system transitions from battery power to wall power and adjust the operating frequency of one or more logic cores to a higher frequency to take advantage of the fact that the system is no longer on battery power.

Additionally, in some embodiments, a system may include temperature control logic **210** that may be configured to adjust the operating temperature of one or more logic cores. For instance, temperature control logic **210** may be configured to monitor the operating temperature for a multi-core processor and/or for individual logic cores of a multi-core processor. As noted above, a multi-core integrated circuit may include a temperature sensor **220** via which temperature control logic **210** may monitor operating temperature. As noted above, if the operating temperature for either an individual logic core, or for the entire integrated circuit, is above a preferred, maximum, or safe, operating temperature, temperature control logic **210** may be configured to reduce the operating frequency for one or more of the logic cores of the multi-core integrated circuit in order to reduce the overall operating temperature of the system. Additionally, in some embodiments, temperature control logic **210** may be configured to raise the operating frequency for one or more logic cores in response to determining an operating temperature below a specified operating temperature. Thus, in some embodiments, the operating frequency for a logic core may be adjusted to a lower frequency, while in other embodiments a logic core may be adjusted to operate at a higher frequency.

In some embodiments, temperature control logic **210** may be configured to raise an operating frequency for a logic core only if the operating frequency for the logic core was reduced previously. For instance, the operating frequency for logic core **120**A may, upon system startup, be initially set to a specified maximum operating frequency and temperature control logic **210** may only raise the operating frequency for logic core **120**A if the operating frequency for logic core **120**A has been lowered from the initial frequency. Similarly, when raising the operating frequency for a logic core, power management logic **200** and/or temperature control logic **210** may be configured to only raise the operating frequency to a specified maximum frequency regardless of whether the system's current power consumption and/or operating temperature might allow the logic core to operating at a frequency higher than the specified maximum operating frequency.

In other embodiments, however, temperature control logic **210** may be configured to raise the operating frequency for a logic core regardless of whether the operating frequency and/or voltage for that logic had been previously reduced. Thus, in one embodiment, temperature control logic **210** may be configured to raise the operating frequency for a logic core above a specified maximum frequency if an operating temperature for the logic core is sufficiently low as to indicate that even after raising the operating frequency for the logic core the logic core may still operating at or below a maximum operating temperature. Thus, in some embodiments, temperature control logic **210** may the operating frequency of a processor above a specified maximum frequency if the processor is operating at a sufficiently low operating temperature. As noted above, when raising the operating frequency for a logic core, temperature control logic **210** may also raise the operating voltage for the logic core in order to support the higher operating frequency.

Thus, power management logic **200** may determine a new frequency for a logic core, as indicated by block **410**. Power management logic **200**, which may be implemented in hardware, firmware, software, or a combination thereof, may determine a new operating frequency for a logic core, such as based upon a standard algorithm or from a look up table containing various operating frequencies. After determining a new operating frequency for a logic core, power management logic **200** may determine whether the new frequency is compatible with the current operating voltage for the logic core, as indicated by decision block **420**. For instance, if the

new frequency is higher than the current operating frequency, the current voltage for the logic core may not be able to support the new frequency. If the new frequency is not compatible with the current operating voltage, power management logic **200** may determine a new voltage that is compatible with the new frequency, as indicated by block **430**. As when determining a new frequency, power management logic **200** may determine a new operating voltage using various methods, such as an algorithm or a look up table of compatible pairs of voltage and frequencies, according to various embodiments. After determining a new operating voltage that is compatible with the new frequency, power management logic **440** may set the new voltage as the operating voltage for the logic core, as indicated by block **440**.

If the new frequency is compatible with the current operating voltage for the logic core, or after adjusting the operating voltage for the logic core to a voltage that is compatible with the new frequency, power management logic **200** may set the new frequency as the operating frequency for the logic core, as indicated by block **450**. In some embodiments, power management logic **200** may set a new operating voltage, if required, before setting an operating frequency. In other embodiments, however, power management logic **200** may set the new operating voltage and new operating frequency at the same time or may, in some embodiments, set a new operating frequency before setting the new operating voltage.

As described above, a logic core may, in some embodiments, be configured to communicate with common bridge logic **110**, such as a Northbridge, that may be operating at a different frequency that the new frequency for the logic core. Thus, in some embodiments, power management logic **200** may be configured to adjust such common bridge logic **110** for the new operating frequency of the logic core, as illustrated in block **460**, to maintain the communication between the logic core and the common bridge logic. For example, in one embodiment, power management logic **200** may be configured to adjust the common bridge logic **110** to operate at the new operating frequency for the logic core. However, in other embodiments, power management logic **200** may adjust common bridge logic **110** to operate at a frequency compatible with the new operating frequency for the logic core.

For example, the common bridge logic **110** may be adjusted to operate at a higher frequency than the new operating frequency for the logic core and the common bridge logic may include communication protocol logic **320** configured to communicate with the logic core using a divided or stepped down version of the higher operating frequency of the common bridge logic. In other embodiments, communication protocol logic **320** may be configured to ensure that the timings of each communication or signal between the logic core and the common bridge logic are such that they take into account a difference in the operating frequencies of the logic core and the common bridge logic. Thus, power management logic **200** may be configured to adjust common bridge logic **110** in response to the new operating frequency of a logic core in any of various ways, such as by adjusting the overall operating frequency for the common bridge logic, by adjusting communication protocol logic to account for differences between the operating frequency of the common bridge logic and the operating frequency for the logic core, or by performing a combination of both, according to various embodiments. When adjusting common bridge logic **110** in response to a new operating frequency for a logic core, power management logic **200** may also take into account the operating frequencies of other logic cores with which common bridge logic **110** may be communicating. Additionally, power management logic **200** may also adjust the operating voltage for common bridge logic **110** to be compatible with a new operating frequency for common bridge logic **110** or in response to having set a new operating voltage for a logic core.

Please note that while FIG. **4** is described above mainly in reference to power management logic controlling the operating frequency and voltage for a logic core, in some embodiment, temperature control logic may also control the operating frequency and voltage for a logic core. Additionally, in other embodiments, the steps described above regarding FIG. **4** may be performed in a different order, or with additional or fewer steps, than described above.

While FIG. **4** illustrates a flowchart for a method of adjusting the operating frequency of a logic core, FIG. **5** is a flowchart illustrated one embodiment of a method for adjusting the operating voltage of a logic core. Thus, a system may detect a need to change the operating voltage for one or more logic cores, as indicated by block **500**. As noted above regarding FIG. **4**, a system may include power management logic **200** configured to monitor and adjust the power consumption and usage for the system. Thus, in some embodiments, power management logic **200** may determine that the operating voltage for one or more logic cores, such as in logic cores **120** of multi-core integrated circuit **100**. For example, power management logic **200** may determine that the system is operating on battery power and may reduce the operating voltage of one or more of the logic cores in order to reduce the overall power consumption of the system. Alternatively, power management logic **200** may be configured to raise the operating voltage for one or more logic cores in response to detecting that the system is no longer executing on battery power. Additionally, in some embodiments, power management logic **200** may be configured to reduce the operating voltage of logic core(s) in steps according to an estimate of how much battery power is remaining.

Alternatively, temperature control logic **210** may change the operating voltage of one or more logic cores **120** based on an operating temperature for the system, multi-core integrated circuit, or an individual logic core, according to various embodiments. For instance, as noted above, temperature control logic **210** may detect, such as via temperature sensor **220**, that an operating temperature for integrated circuit **100** is higher than a preferred, maximum, or safe operating temperature and may reduce the operating voltage of one or more logic cores **120** of integrated circuit **110** in response. Additionally, temperature control logic **210** may be configured to raise the operating voltage of one or more logic cores **120** in response to detecting that the operating temperature for the logic cores **120**, the integrated circuit **100** or the system as a whole, is sufficiently lower than a specified operating temperature. In other words, if temperature control logic **210** determines that there is enough difference between a current operating temperature and a specified maximum operating temperature, temperature control logic **210** may raise the current operating voltage for one or more logic cores. In some embodiments, temperature control logic **210** may be configured to raise the operating voltage for a single logic core is that logic core has a lower operating temperature than other logic cores.

In some embodiments, temperature control logic **210** may be configured to raise an operating voltage for a logic core only if the operating voltage for the logic core was reduced previously. For instance, the operating voltage for logic core

120A may, upon system startup, be initially set to a maximum operating voltage and temperature control logic **210** may only raise the operating voltage for logic core **120**A if the operating voltage for logic core **120**A has been lowered from the initial maximum voltage. Similarly, when raising the operating voltage for a logic core, power management logic **200** and/or temperature control logic **210** may be configured to only raise the operating voltage to a specified maximum voltage regardless of whether the system's current power consumption and/or operating temperature might allow the logic core to operating at a voltage higher than the specified maximum operating voltage.

In other embodiments, however, temperature control logic **210** may be configured to raise the operating voltage of a logic core regardless of whether or not the operating characteristics for that logic core had been previously lowered. In some embodiments, temperature control logic **120** may be configured to raise the operating voltage for a logic core above a specified maximum operating voltage. For example, if a logic core of an integrated circuit is operating at an operating temperature below a specified maximum operating temperature while operating at a specified maximum operating voltage, temperature control logic **210** may be configured to raise the operating voltage for the logic core above the specified maximum operating voltage.

Thus, after detecting a need to change the operating voltage for one or more logic cores, power management logic **200** or temperature control logic **210** may be configured to determine a new operating voltage for the logic core(s), as indicated by block **510**. In some embodiments, the new operating voltage may be determined via a voltage determining algorithm designed to determine a new operating voltage based upon current operating conditions for the system, such as current operating temperature, current power availability or current power consumption. Alternatively, in some embodiments, a new operating voltage for a logic core may be determined based upon a fixed table of operating voltages. In some embodiments, the new operating voltage may be selected to maintain a current operating frequency, while in other embodiments the new voltage may be selected without regard to the current operating frequency.

After determining a new operating voltage for one or more logic cores, power management logic **200** or temperature control logic **200** may set the new voltage as the operating voltage for the logic core(s), as indicated by block **520**. When setting new operating voltages for more than one logic core, in some embodiments, power management logic **200** (or temperature control logic **210**) may determine and adjust the operating voltage for each logic core separately. In other embodiments, however, the logic cores may all be set to use the same new voltage.

In some embodiments, power management logic **200** or temperature control logic **210** may determine whether the current operating frequency for the logic core(s) is compatible with the new operating voltage, as indicated by decision block **530**. Thus, in some embodiments a new operating frequency may be determined and the operating voltage may be adjusted based on the new frequency, while in other embodiments a new operating voltage may be determined and the operating frequency adjusted accordingly. Thus, if a current operating frequency for a logic core is not compatible with a new voltage, a new frequency may be determined (or selected) that is compatible with the new voltage, as indicated by block **540**. For instance, in one embodiment, power management logic **200** may reduce the operating voltage of one or multiple logic cores to reduce power consumption, and may also reduce the operating frequency to be compatible with the new operating voltage.

Similarly, in other embodiments, temperature control logic **210** may reduce the operating voltage for a logic core, or multiple logic cores, to reduce operating temperature and may also reduce the operating frequency accordingly. Additionally, power management logic **200** may be configured to increase the operating voltage for a logic core to take advantage of increase power availability, such as when a system is switched to wall power from battery power, and may also increase the operating frequency to a higher frequency compatible with a new, higher, operating voltage. Similarly, temperature control logic **210** may set a new operating frequency for a logic core to take advantage of a new, higher, operating voltage, such as when adjusting the operating voltage of a logic core in response to determining that an operating temperature is lower than a specified maximum operating temperature.

After determining a new frequency that is compatible with the new operating voltage, power management logic **200** (or temperature control logic **210**) may set the new frequency as the operating frequency for the logic core(s), as indicated by block **550**. As noted above, regarding FIG. **4**, a new operating voltage may be set before setting a new operating frequency in some embodiments, while in other embodiments, a new operating voltage and a new operating frequency may be set at the same time. In yet other embodiments, the new operating frequency may be set before the new operating voltage. As noted previously, when setting a new operating voltage and/or frequency, the logic core and/or the entire integrated circuit may not operate during a transition period between the old and new operating characteristics. Thus, in some embodiments, a logic core may be configured to save a current state for all current operations before changing to the new operating characteristics. In other embodiments, the logic core may not save any current state, but may simply resume processing at the new operating characteristics, perhaps after a brief transition period.

As described above, in some embodiments common bridge logic **110** may also be adjusted to operate according to the new operating voltage and/or frequency of the logic core, as indicated by block **560**. For example, common bridge logic **110** may be adjusted to operate at a new voltage and/or frequency compatible with the new operating characteristics (voltage and frequency) of the logic cores. Alternatively, voltage translation logic located at the interface between a logic core **120** and common bridge logic **110** may be adjusted to properly translate between the voltage levels of common bridge logic **110** and the logic core. Similarly, in some embodiments, protocol logic, such as common protocol logic **320**A, of common bridge logic **110** may be adjusted to take into account the new operating characteristics of a logic core when communicating with that logic core, such as by ensuring that the timings used in a communications protocol between the common bridge logic and the logic core are appropriate to take into account a difference between the two operating frequencies.

While FIGS. **4** and **5**, described above, illustrate methods for making single adjustments to the operating characteristics for one or more logic cores of a multi-core integrated circuit, FIG. **6** is a flowchart illustrating one embodiment of a method for reducing the operating characteristics for one or more logic cores in steps or stages. For example, in one embodiment, temperature control logic, such as temperature control logic **210**, may be configured to monitor the operating temperature of integrated circuit **100** and may determine that the current operating temperature of integrated

circuit **100** is higher than a specified operating temperature, as indicated by block **600**. Alternatively, in some embodiments, temperature control logic **210** may compare a current operating temperature, such as obtained via temperature sensor **220**, with a maximum safe operating temperature, above which integrated circuit **100** may not operate reliably or may suffer damage. As noted above, in some embodiments, temperature control logic **210** may monitor a single operating temperature for integrated circuit **100**, while in other embodiments, temperature control logic **210** may monitor multiple, individual operating temperature corresponding to individual logic cores or areas of integrated circuit **100**.

After determining that an operating temperature (for either the entire integrated circuit or of one or more individual logic cores) is too high, temperature control logic **210** may lower the operating frequency and/or voltage for one or more logic cores **120** of integrated circuit **100**, as indicated by block **610**. As noted above, regarding FIGS. **4** and **5**, temperature control logic **210** may first determine a new operating frequency and then adjust the operating voltage accordingly. Or alternatively, in other embodiments, temperature control logic **210** may first determine a new operating voltage and then adjust the operating frequency. In some embodiments, temperature control logic **210** may lower the operating frequency for multiple logic cores in order to reduce the overall operating temperature for integrated circuit **100**. In other embodiments, however, temperature control logic **210** may be configured to reduce the operating frequency and/or voltage for a single logic core initially when attempting to reduce the overall operating temperature for the integrated circuit **100**.

After reducing the operating characteristics (i.e. voltage and/or frequency) for one or more logic cores **120** of integrated circuit **100**, temperature control logic **210** may be configured to verify that the operating temperature lowers is response to the lower operating characteristics. Thus, temperature control logic **210** may monitor the operating temperature, such as via temperature sensor **220**, to determine whether the operating temperature for integrated circuit **100**, or for one or more individual logic cores, is still too high, as indicated by decision block **620**. In other words, after making an initial adjustment to the operating characteristics of one or more logic cores **120**, temperature control logic **210** may verify that the operating temperature was lowered to a level lower than a specified maximum operating temperature. In some embodiments, temperature control logic **210** may be configured to wait a certain amount of time to allow the operating temperature to settle after adjusting the operating characteristics for one or more logic cores before determining whether or not the operating temperature was reduced enough.

If, after reducing the operating characteristics for one or more logic cores of an integrated circuit the operating temperature for the integrated circuit, or for one or more of the logic cores, does not lower enough, temperature control logic **210** may lower the operating frequency and/or voltage for the logic core(s) further, as indicated by block **630**. For example, temperature control logic **210** may initially reduce the operating characteristics (i.e. frequency and/or voltage) for multiple logic cores **120** by a certain amount and may subsequently lower the operating characteristics for the logic cores even further, as indicated by block **640**. For instance, in one embodiment, temperature control logic **210** may initially lower the operating frequency for multiple logic cores **120** by half, but if after that the operating temperature for integrated circuit **100** remains higher than a specified maximum operating temperature, temperature control logic **210** may reduce the operating frequency still further, such as to one forth of the original value. Similarly, temperature control logic **210** may initially reduce the operating voltage by half and then subsequently reduce it even further. In another embodiment, temperature control logic **210** may initially reduce the operating characteristics for a single logic core, such as logic core **120**A, in order to reduce the overall operating temperature of integrated circuit **100**. If the operating temperature for integrated circuit **100** does not lower sufficiently (e.g. to a level lower than a specified maximum value), temperature control logic **210** may then lower the operating characteristics for one or more additionally logic cores of integrated circuit **100**.

In some embodiments, the operating frequency and/or voltage of a single logic core may be reduced through various stages until reaching some minimum level and then the operating frequency and/or voltage of one or more other logic cores may be adjusted through those same stages until the operating temperature of integrated circuit **100** is reduced to a level at or below a specified maximum operating temperature. Alternatively, in other embodiments, the operating frequencies and voltages for multiple logic cores **120** may be reduced together (i.e. in parallel) through a various levels or stages, until the operating temperature for integrated circuit **100** is reduced enough.

In some embodiments, temperature control logic **210** may be configured to determine how many logic cores for which to adjust the operating characteristics based upon how much the operating temperature for integrated circuit **100** needs to be lowered. Thus, if the current operating temperature for integrated circuit **100** is sufficiently close to or higher than a specified maximum operating temperature, temperature control logic **210** may adjust the operating characteristics of multiple (or all) of the logic cores in integrated circuit **100**. If, however, the current operating temperature for integrated circuit **100** is approaching or at a specified maximum operating temperature, temperature control logic **210** may adjust the operating characteristics of a fewer number of logic cores or of only a single logic core in integrated circuit **100**.

Thus, temperature control logic **210** may reduce the operating characteristics for logic cores in steps or stages according to various methods, in different embodiments. In some embodiments, temperature control logic **210** may reduce the operating characteristics for multiple logic cores in parallel to various frequencies and/or voltages, while, in other embodiments, temperature control logic **210** may reduce the operating characteristics of individual logic cores independently and in turn. If, after adjusting the operating characteristics of one or more logic cores, either initially or multiple times, the current operating temperature for integrated circuit **100** is still not too high, as indicated by the negative output of decision block **620**, temperature control logic **210** may continue normal processing, as indicated by block **650**, which may include continuing to monitor the operating temperature of integrated circuit **100**.

While the method illustrated by FIG. **6** is described above regarding reducing the operating characteristics of one or more logic cores for temperature control purposes, in other embodiments, the operating characteristics for logic cores may be adjusted for power management reasons. Thus, power management logic **200** may be configured to reduce the operating characteristics of one or more logic cores **120** in steps or stages in order to reduce the overall power consumption of integrated circuit **100**, according to some embodiments. Similar to the method described above

regarding temperature control, power management logic **200** may initially reduce the operating characteristics for a single logic core, continue to monitor the power consumption of integrated circuit **100**, and subsequently may reduce the operating characteristics of additional logic cores to reduce the power consumption of integrated circuit **100** even further. Additionally, in some embodiments, power control logic **200** may be configured to reduce the operating characteristics for multiple logic cores **120** together and then subsequently reduce the operating characteristics for the same logic cores even further, if required or desired.

FIG. **7** is a flowchart illustrating one embodiment of a method for raising the frequency and/or voltage of one or more logic cores of a multi-core integrated circuit. For instance, after reducing the operating characteristics of one or more logic cores **120** of integrated circuit **100**, such as for power management or temperature control, the operating characteristics may be subsequently adjusted upwards, such as in response to greater power availability or to take advantage of a difference between a current operating temperature and a specified maximum operating temperature, according to various embodiments. Thus, in some embodiments, temperature control logic **210** may lower the operating frequency and/or voltage for one or more logic cores **120**, as indicated by block **700**, in response to detecting that the operating temperature of integrated circuit **100** is greater than, or within some range of, a specified maximum operating temperature. Subsequently, temperature control logic **200**, as part of continuing to monitor an operating temperature for integrated circuit **100**, may determine whether the operating temperature for integrated circuit **100** is lower than a specified maximum, as indicated by decision block **710**.

If, after adjusting the operating characteristics of one or more logic cores, either initially or multiple times, the current operating temperature for integrated circuit **100** is within a range of a specified maximum operating temperature, as indicated by the negative output of decision block **710**, temperature control logic **210** may continue normal processing, as indicated by block **750**, which may include continuing to monitor the operating temperature of integrated circuit **100**. If, however, a current operating temperature is sufficiently lower than a specified maximum operating temperature, temperature control logic **210** may raise the operating frequency and/or voltage for one or more of the logic cores (for which the operating characteristics were previously lowered), as indicated by block **720**. Additionally, in some embodiments, temperature control logic **210** may be configured to monitor the operating temperature of each logic core individually and may also be configured to adjust the operating characteristics for each logic core individually based on the individual operating temperature measurements. Thus, in some embodiments, temperature control logic **210** may lower the operating voltage and/or frequency for one logic core that may be operating too warmly, while raising the operating voltage and/or frequency for another logic core that has a lower operating temperature.

After raising the operating frequency and or voltage of one or more of the logic cores, temperature control logic **210** may also adjust common bridge logic **110** for compatibility with the new operating characteristics of the logic cores, as indicated by block **730**. For example, common bridge logic **110** may be adjusted to operate at frequency at least at high as, and possible higher than, the new operating frequency for the logic cores. Additionally, communication protocol logic of common bridge logic **110** may be adjusted to take into account the new operating frequency of the logic cores. Furthermore, voltage translation logic between a logic core **120** and common bridge logic **110** may be adjusted to properly translate between voltage level(s) of common bridge logic **110** and the new operating voltage of logic core **120**.

While the flowchart illustrated by FIG. **7** was described above regarding temperature control, similar methods may be employed for power management, in some embodiments. For instance, power management logic **200** may lower the operating characteristics for one or more logic cores to reduce the overall power consumption of integrated circuit **100**, such as in response to the system switching to battery power and/or as part of general power conservation methods or techniques. Power management logic **200** may subsequently continue to monitor the power consumption of integrated circuit **100** and may also monitor the power availability to integrated circuit **100**, such as whether the system is still operating on battery power, to determine whether to raise the operating characteristics of the logic cores to take advantage of current power availability. For example, after reducing the operating frequency and/or voltage for one or more logic cores in response to the system operating on battery power, power management logic **200** may detect that the system is no longer operating on battery power, but may be operating on wall power, and in response may raise the operating frequency and/or voltage of the logic cores, since reduced power consumption may no longer be required.

FIG. **8** shows a block diagram of one embodiment of a computer system **1000** that includes a microprocessor **1100** coupled to a variety of system components through a Bus Bridge **402**. Microprocessor **1100** may include multiple logic cores each of which may be configured to operate at voltages and/or frequencies independent of the voltages and/or frequencies at which others of the cores may operate, as described herein according to various embodiments. In some embodiments processor **1100** may include integrated circuit **100**, one or more logic cores **120**, common bridge logic **110**, and/or one or more temperature sensors **220**, described above. Additionally, system **1000** may include power management logic **200** and/or temperature control logic **210** both of which may be configured to control or adjust the operating frequency and/or voltage for logic core(s) **120**, and possible common bridge logic **110**, according to various embodiments, and as described herein.

Additionally, other components of system **1000** may include multiple logic cores that may be configured to operate at independent frequencies and/or voltages. For example, graphics controller **1108** may include one or more multi-core integrated circuits and each logic core within such an integrated circuit may be configured to operate at independent frequencies and/or voltages, as described herein. Similarly, secondary bus **1116**, or any of PCI devices **1112** or ISA devices **1118** may also include multi-core integrated circuits or other components that are configured to operating at independent frequencies and/or voltages, as described herein.

Computer system **1000** and/or integrated circuit **100**, described above, may be part of any of various types of devices, including, but not limited to, a personal computer system, desktop computer, laptop or notebook computer, mainframe computer system, handheld computer, workstation, network computer, a consumer device, application server, storage device, a peripheral device such as a switch, modem, router, etc, or in general any type of computing device.

In the depicted system, a main memory **1104** is coupled to Bus Bridge **1102** through a memory bus **1106**, and a graphics controller **1108** is coupled to Bus Bridge **1102** through an AGP bus **1110**. However, other embodiments of a computer system are possible and contemplated. Several PCI devices, such as PCI devices **1112**A-**1112**B, may be coupled to Bus Bridge **1102** through a PCI bus **1114**. A secondary Bus Bridge **1116** may also be provided to accommodate an electrical interface to one or more EISA or ISA devices **1118** through an EISA/ISA bus **1120**. In the example illustrated in FIG. **8**, microprocessor **1100** may be coupled to Bus Bridge **1102** through a CPU bus **1124** and may also be coupled to an optional L2 cache **1128**, according to one embodiment. In some embodiments, the microprocessor **1100** may include an integrated L1 cache (not shown). Please note that in some embodiments, main memory **1104** may include program instructions configured to implement independently controlling the operating frequency and/or voltage of logic cores **120** and/or common bridge logic **110**, as described herein.

Bus Bridge **1102** may provide an interface between microprocessor **1100**, main memory **1104**, graphics controller **1108**, and devices attached to PCI bus **1114**. When an operation is received from one of the devices connected to Bus Bridge **1102**, Bus Bridge **1102** identifies the target of the operation (e.g., a particular device or, in the case of PCI bus **1114**, that the target is on PCI bus **1114**). Bus Bridge **1102** routes the operation to the targeted device. Bus Bridge **1102** generally translates an operation from the protocol used by the source device or bus to the protocol used by the target device or bus.

In addition to providing an interface to an ISA/EISA bus for PCI bus **1114**, secondary Bus Bridge **1116** may incorporate additional functionality. An input/output controller (not shown), either external from or integrated with secondary Bus Bridge **1116**, may also be included within computer system **1100** to provide operational support for a keyboard and mouse **1122** and for various serial and parallel ports. An external cache unit (not shown) may also be coupled to CPU bus **1124** between microprocessor **1100** and Bus Bridge **1102** in other embodiments. Alternatively, the external cache may be coupled to Bus Bridge **1102** and cache control logic for the external cache may be integrated into Bus Bridge **1102**. L2 cache **1128** is shown in a backside configuration to microprocessor **1100**. It is noted that L2 cache **1128** may be separate from microprocessor **1100**, integrated into a cartridge (e.g., slot **1** or slot A) with microprocessor **1100**, or even integrated onto a semiconductor substrate with microprocessor **1100**.

Main memory **1104** may be a memory in which application programs are stored and from which microprocessor **1100** primarily executes. A suitable main memory **1104** may include DRAM (Dynamic Random Access Memory). For example, a plurality of banks of SDRAM (Synchronous DRAM) or Rambus DRAM (RDRAM) may be suitable.

PCI devices **1112**A-**1112**B are illustrative of a variety of peripheral devices such as network interface cards, video accelerators, audio cards, hard or floppy disk drives or drive controllers, SCSI (Small Computer Systems Interface) adapters and telephony cards. Similarly, ISA device **1118** is illustrative of various types of peripheral devices, such as a modem, a sound card, and a variety of data acquisition cards such as GPIB or field bus interface cards.

Graphics controller **1108** is provided to control the rendering of text and images on a display **1126**. Graphics controller **1108** may embody a typical graphics accelerator generally known in the art to render three-dimensional data structures that can be effectively shifted into and from main memory **1104**. Graphics controller **1108** may therefore be a master of AGP bus **1110** in that it can request and receive access to a target interface within Bus Bridge **1102** to thereby obtain access to main memory **1104**. A dedicated graphics bus accommodates rapid retrieval of data from main memory **1104**. For certain operations, graphics controller **1108** may further be configured to generate PCI protocol transactions on AGP bus **1110**. The AGP interface of Bus Bridge **1102** may thus include functionality to support both AGP protocol transactions as well as PCI protocol target and initiator transactions. Display **1126** is any electronic display upon which an image or text can be presented. A suitable display **1126** includes a cathode ray tube ("CRT"), a liquid crystal display ("LCD"), etc.

It is noted that, while the AGP, PCI, and ISA or EISA buses have been used as examples in the above description, any bus architectures may be substituted as desired. It is further noted that computer system **1000** may be a multiprocessing computer system including additional microprocessors (e.g., microprocessor **1100***a* shown as an optional component of computer system **1000**). Microprocessor **1100***a* may be similar to microprocessor **1100**. More particularly, microprocessor **1100***a* may be an identical copy of microprocessor **1100** in one embodiment. Microprocessor **1100***a* may be connected to Bus Bridge **1102** via an independent bus or may share CPU bus **1124** with microprocessor **1100**. Furthermore, microprocessor **1100***a* may be coupled to an optional L2 cache **1128***a* similar to L2 cache **1128**.

As used herein, the terms "clock cycle" or "cycle" refer to an interval of time in which the various stages of the instruction processing pipelines complete their tasks. Instructions and computed values are captured by memory elements (such as registers or arrays) according to a clock signal defining the clock cycle. For example, a memory element may capture a value according to the rising or falling edge of the clock signal.

Numerous variations and modifications will become apparent to those skilled in the art once the above disclosure is fully appreciated. It is intended that the following claims be interpreted to embrace all such variations and modifications.

What is claimed is:

1. An integrated circuit, comprising:

a plurality of logic cores, wherein at least one of the plurality of logic cores is configured to operate at a voltage level independent of a voltage level at which another of the plurality of logic cores operates, and wherein at least one of the logic cores is configured to operate at a frequency independent of a frequency at which another of the plurality of logic cores operates;

a common interface unit, wherein the common interface unit is configured to provide an interface between the plurality of logic cores and one or more components external to the integrated circuit, wherein during operation the common interface unit is configured to communicate with ones of the plurality of logic cores operating at different voltage levels and ones of the logic cores operating at different frequencies; and

power management logic configured to:

adjust a current operating voltage level to a new operating voltage level for at least one of the plurality of logic cores; and

detect an incompatibility between the new operating voltage and a current operating frequency of the at least one of the plurality of logic cores and, in

response to said detecting, determine a compatible operating frequency for the at least one of the plurality of logic cores.

2. The integrated circuit of claim **1**, wherein the power management logic is further configured to adjust a current operating voltage level for at least one of the plurality of logic cores in response to determining that a current operating temperature for the integrated circuit is hotter than a specified temperature.

3. The integrated circuit of claim **2**, further comprising one or more temperature sensors configured to determine a current operating temperature for the integrated circuit.

4. The integrated circuit of claim **3**, wherein the power management logic is configured to determine a current operating temperature for the integrated circuit according to at least one of the one or more temperature sensors.

5. The integrated circuit of claim **3**, wherein to determine a current operating temperature for the integrated circuit at least one of the one or more temperature sensors is configured to determine a current operating temperature for a specific one of the plurality of logic cores.

6. The integrated circuit of claim **2**, further comprising a voltage regulator configured to supply a plurality of voltages to the at least one of the plurality of logic cores, wherein to adjust a current operating voltage the power management logic is configured to send control signals to the voltage regulator requesting the voltage regulator to supply a lower voltage to the at least one of the plurality of logic cores, wherein the lower voltage is lower than a current operating voltage for the at least one of the plurality of logic cores.

7. The integrated circuit of claim **2**, wherein in further response to determining that a current operating temperature for the integrated circuit is hotter than a specified temperature, the power management logic is configured to adjust an operating voltage for the common interface unit to an adjusted voltage, wherein the adjusted voltage is lower than a current operating voltage for the common interface unit.

8. The integrated circuit of claim **2**, wherein the power management logic is further configured to adjust an operating frequency for at least one of the plurality of logic cores in response to determining that a current operating temperature for the integrated circuit is hotter than a specified temperature for the integrated circuit.

9. The integrated circuit of claim **8**, wherein the power management logic is further configured to adjust an operating frequency for the common interface unit to an adjusted frequency, wherein the adjusted frequency is equal to or greater than the adjusted operating frequency of the at least one of the plurality of logic cores.

10. The integrated circuit of claim **1**, wherein each of the logic cores is a processor core configured to execute program instructions.

11. The integrated circuit of claim **1**, wherein the common interface unit is a common bridge unit configured to bridge between the plurality of logic cores and one or more communication interfaces configured for communicating with one or more components external to the integrated circuit.

12. The integrated circuit of claim **11**, wherein the common bridge unit is a Northbridge unit.

13. The integrated circuit of claim **1**, further comprising frequency control logic configured to adjust an operating frequency of at least one of the plurality of logic cores in response to determining that a current operating temperature for the integrated circuit is hotter than a specified temperature for the integrated circuit.

14. The integrated circuit of claim **13**, farther comprising a frequency generator configured to supply a frequency signal to the at least one of the plurality of logic cores, wherein to adjust the operating frequency of the at least one of the plurality of logic cores, the frequency control logic is configured to request that the frequency generator to supply a lower frequency signal to the at least one of the plurality of logic cores, wherein the lower frequency is lower than a current frequency for the at least one of the plurality of logic cores.

15. The integrated circuit of claim **1**, further comprising voltage translation logic located at an interface between the at least one of the plurality of logic cores and the common interface unit, wherein the voltage translation logic is configured to translate communication signals from a voltage level at which the common interface unit is operating to a voltage level at which the at least one of the logic cores is operating.

16. The integrated circuit of claim **1**, further comprising frequency control logic configured to increase an operating frequency of at least one of the plurality of logic cores in response determining that a current operating temperature for the integrated circuit is cooler than a specified temperature for the integrated circuit.

17. A method, comprising:

determining that a current operating temperature for an integrated circuit is hotter than a specified temperature, wherein the integrated circuit comprises a plurality of logic cores, wherein each of the logic cores is configured to operate at a voltage independent of a voltage at which another of the logic cores operates, and wherein each of the logic cores is configured to operate at a frequency independent of a frequency at which another of the logic cores operates;

determining a subset of the plurality of logic cores, wherein a size of the subset is selected dependent upon a difference between the specified temperature and the current operating temperature for the integrated circuit, wherein the size of the subset is greater than one and less than all of the plurality of logic cores; and

supplying a lower operating voltage for the subset of logic cores, wherein the lower operating voltage is lower than a current operating voltage for the subset of logic cores.

18. The method of claim **17**, further comprising:

determining whether an incompatibility exists between the lower operating voltage and a current operating frequency for the subset of logic cores; and

in response to said determining:

supplying a lower frequency to the subset of logic cores if the current operating frequency for the subset of logic cores is incompatible with the lower operating voltage; and

maintaining the current operating frequency for the subset of logic cores if the current operating frequency is not incompatible with the lower operating voltage.

19. The method of claim **17**, further comprising supplying a lower voltage to a common interface unit coupled to the subset of logic cores, wherein the common interface unit is configured to interface to the subset of logic cores and to interface to one or more components external to the integrated circuit.

20. The method of claim **19**, further comprising, if a current operating frequency for the common interface unit is incompatible with the lower voltage, supplying a lower

frequency to the common interface unit, wherein the lower frequency is lower than the current operating frequency.

21. A method, comprising:

determining that a current operating temperature for an integrated circuit is hotter than a specified temperature, wherein the integrated circuit comprises a plurality of logic cores, wherein each of the logic cores is configured to operate at a voltage independent of a voltage at which another of the logic cores operates, and wherein each of the logic cores is configured to operate at a frequency independent of a frequency at which another of the logic cores operates; and

determining a subset of the plurality of logic cores, wherein a size of the subset is selected dependent upon a difference between the specified temperature and the current operating temperature for the integrated circuit, wherein the size of the subset is greater than one and less than all of the plurality of logic cores; and

supplying a lower operating frequency for the subset of logic cores, wherein the lower operating frequency is lower than a current operating frequency for the subset of logic cores.

22. The method of claim **21**, further comprising:

determining whether an incompatibility exists between the lower operating frequency and a current operating voltage for the subset of logic cores; and

in response to said determining:

supplying a lower voltage to the subset of logic cores if the current operating voltage for the subset of logic cores is incompatible with the lower operating frequency; and

maintaining the current operating voltage for the subset of logic cores if the current operating voltage is not incompatible with the lower operating frequency.

23. The method of claim **21**, further comprising supplying a lower frequency to a common interface unit coupled to the subset of logic cores, wherein the common interface unit is configured to interface to the subset of logic cores and to interface to one or more components external to the integrated circuit.

24. The method of claim **23**, further comprising, if a current operating voltage for the common interface unit is incompatible with the lower frequency, supplying a lower voltage to the common interface unit, wherein the lower voltage is lower than the current operating voltage.

25. A computer system, comprising:

a processor;

memory coupled to the processor;

wherein the processor comprises:

a plurality of processor cores configured to execute program instructions, wherein each of the plurality of processor cores is configured to operate at a voltage independent of a respective voltage at which another of the plurality of processor cores is operating and wherein each of the plurality of processor cores is configured to operate at a frequency independent of a frequency at which another of the plurality of processor cores is operating;

a common interface unit coupled to each of the processor cores;

wherein the common interface unit is configured to interface to each of the processor cores and to one or more components external to the processor;

wherein the common interface unit is configured to operate at a voltage different from each respective voltage at which the plurality of processor cores are operating; and

wherein the common interface unit is configured to operate at a frequency different from each respective frequency at which the plurality of logic cores are operating; and

power management logic configured to:

adjust a current operating voltage level to a new operating voltage level for at least one of the plurality of logic cores; and

detect an incompatibility between the new operating voltage and a current operating frequency of the at least one of the plurality of logic cores and, in response to said detecting, determine a compatible operating frequency for the at least one of the plurality of logic cores.

26. The computer system of claim **25**, further comprising wherein the power management logic is configured to lower an operating voltage of at least one of the processor cores in response to determining that the processor is operating at a temperature warmer than a specified operating temperature.

27. The computer system of claim **26**, wherein the power management logic is further configured to lower an operating frequency for the at least one of the logic cores in response to said detecting.

28. The computer system of claim **25**, wherein the power management logic is configured to lower an operating frequency of at least one of the logic cores in response to determining that the processor is operating at an temperature warmer than a specified operating temperature.

29. The computer system of claim **28**, wherein the power management logic is further configured to lower an operating voltage for the at least one of the logic cores in response to said detecting.

30. The computer system of claim **25**, wherein the processor further comprises translation logic configured to translate one or more voltage levels for communication signals between the common interface unit and one of the plurality of logic cores if the common interface unit is operating at a voltage different than a voltage at which the one of the logic cores is operating.

31. A system, comprising:

a plurality of processor cores configured to execute program instructions, wherein at least one of the plurality of processor cores is configured to operate at a voltage level independent of a voltage level at which another of the plurality of processor cores operates; and

a common interface unit, wherein the common interface unit is configured to provide an interface between the plurality of processor cores and one or more components external to the integrated circuit, wherein during operation the common interface unit is configured to communicate with ones of the plurality of processor cores operating at different voltage levels, wherein the common interface unit is configured to operate at a voltage level different from each respective voltage level at which the plurality of processor cores are operating; and

temperature control logic configured to:

determine that a current operating temperature is hotter than a specified temperature;

determine a subset of the plurality of processor cores, wherein a size of the subset is selected dependent upon a difference between the specified temperature and the current operating temperature, wherein the size of the subset is greater than one and less than all of the plurality of processor cores; and

supply a lower operating voltage for the subset of processor cores, wherein the lower operating voltage

is lower than a current operating voltage for the subset of processor cores.

32. A system, comprising:

a plurality of processor cores configured to execute program instructions, wherein at least one of the plurality of processor cores is configured to operate at a frequency independent of a frequency at which another of the plurality of processor cores operates; and

a common interface unit, wherein the common interface unit is configured to provide an interface between the plurality of processor cores and one or more components external to the integrated circuit, wherein during operation the common interface unit is configured to communicate with ones of the plurality of processor cores operating at different frequencies, wherein the common interface unit is configured to operate at a frequency different from each respective frequency at which the plurality of processor cores are operating; and

temperature control logic configured to:

determine that a current operating temperature is hotter than a specified temperature; and

determine a subset of the plurality of processor cores, wherein a size of the subset is selected dependent upon a difference between the specified temperature and the current operating temperature, wherein the size of the subset is greater than one and less than all of the plurality of processor cores; and

supply a lower operating frequency for the subset of processor cores, wherein the lower operating frequency is lower than a current operating frequency for the subset of processor cores.

* * * * *

UNITED STATES PATENT AND TRADEMARK OFFICE

CERTIFICATE OF CORRECTION

PATENT NO. : 7,263,457 B2
APPLICATION NO. : 11/325054
DATED : August 28, 2007
INVENTOR(S) : Scott A. White, William A. Hughes and Philip E. Madrid

It is certified that error appears in the above-identified patent and that said Letters Patent is hereby corrected as shown below:

In the Claims:

Claim 14, col. 28, line 1, after "of claim 13," please delete "farther" and insert --further-- in place thereof.

Claim 26, col. 30, line 15, please delete "further comprising".

Signed and Sealed this

Sixth Day of November, 2007

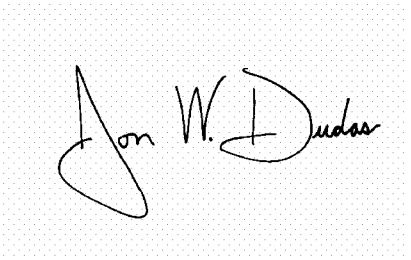

JON W. DUDAS
Director of the United States Patent and Trademark Office