US 20100162006A1

(19) United States

(12) Patent Application Publication

Therien et al.

(10) Pub. No.: US 2010/0162006 A1

(43) Pub. Date: Jun. 24, 2010

(54) **ADAPTIVE POWER BUDGET ALLOCATION BETWEEN MULTIPLE COMPONENTS IN A COMPUTING SYSTEM**

(76) Inventors: **Guy Therien**, Beaverton, OR (US); **Murali Ramadoss**, Folsom, CA (US); **Gregory D. Kaine**, Santa Clara, CA (US); **Eric C. Samson**, Folsom, CA (US); **Venkatesh Ramani**, Milpitas, CA (US)

Correspondence Address:
Buckley, Maschoff & Talwalkar LLC/
Intel Corporation
50 Locust Avenue
New Canaan, CT 06840 (US)

(21) Appl. No.: **12/341,600**

(22) Filed: **Dec. 22, 2008**

Publication Classification

(51) **Int. Cl.**
G06F 1/00 (2006.01)

(52) **U.S. Cl.** **713/300**

(57) **ABSTRACT**

According to some embodiments, a power budget allocation engine of a multi-component computer system may receive a power budget allocation adjustment request signal from a first component. Based on the received budget allocation adjustment request signal (and, in some embodiments, a component preference), the power budget allocation engine may determine whether to adjust a power budget allocation signal provided to the first component.

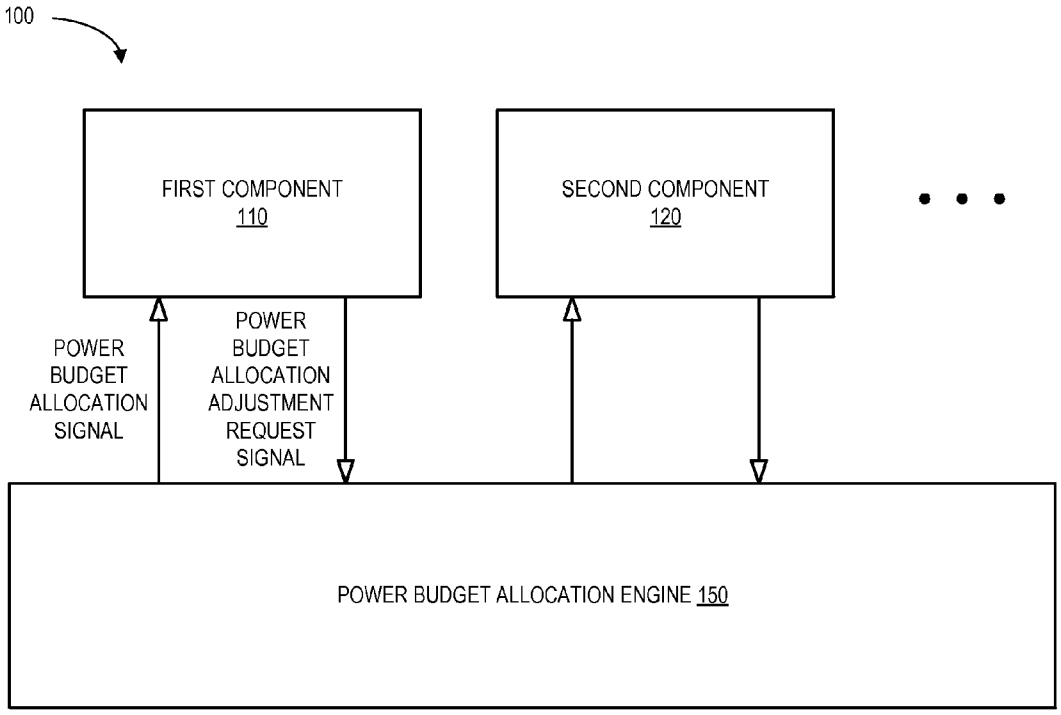

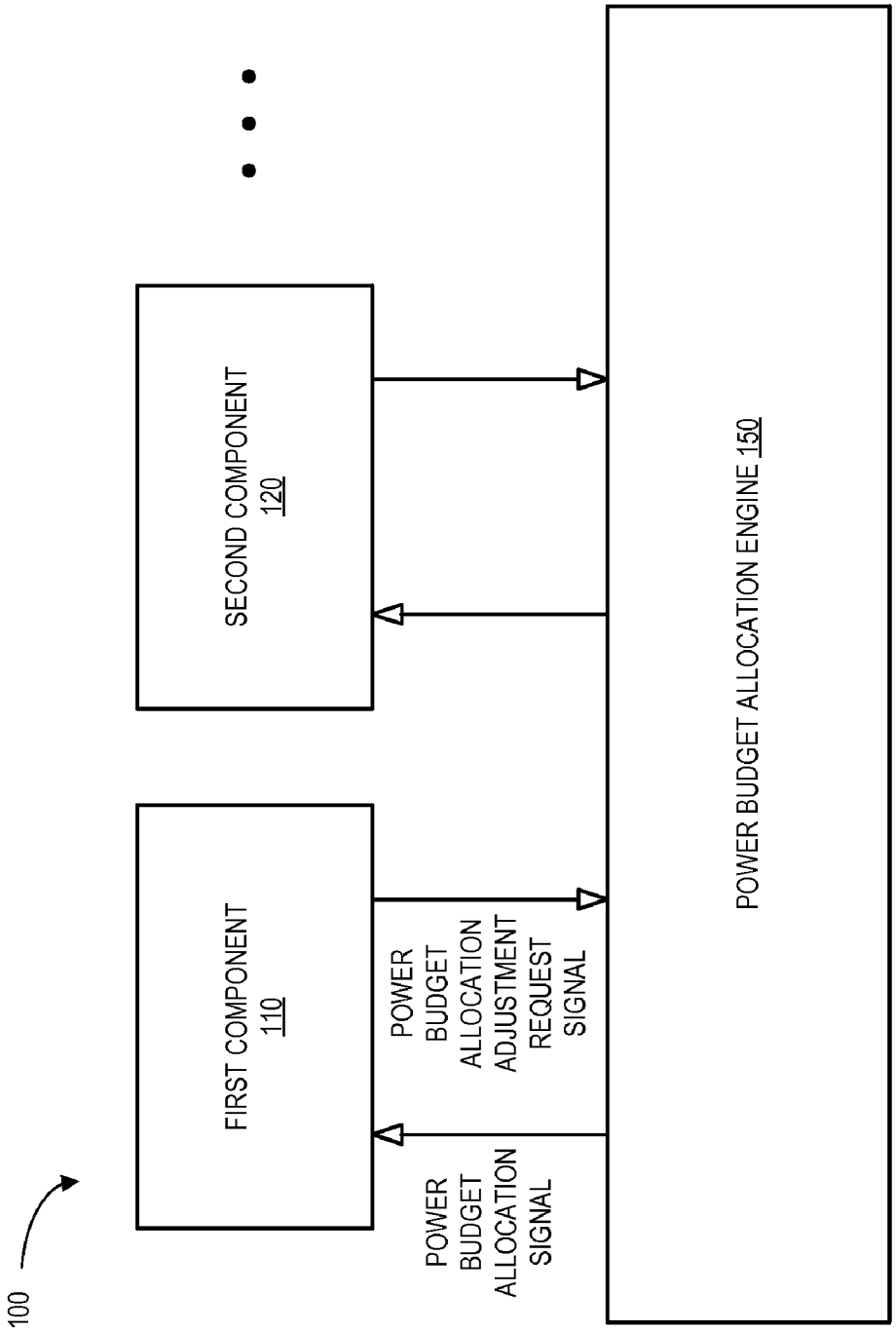
100
FIRST COMPONENT
110
SECOND COMPONENT
120
POWER BUDGET ALLOCATION SIGNAL
POWER BUDGET ALLOCATION ADJUSTMENT REQUEST SIGNAL
POWER BUDGET ALLOCATION ENGINE 150

FIG. 1

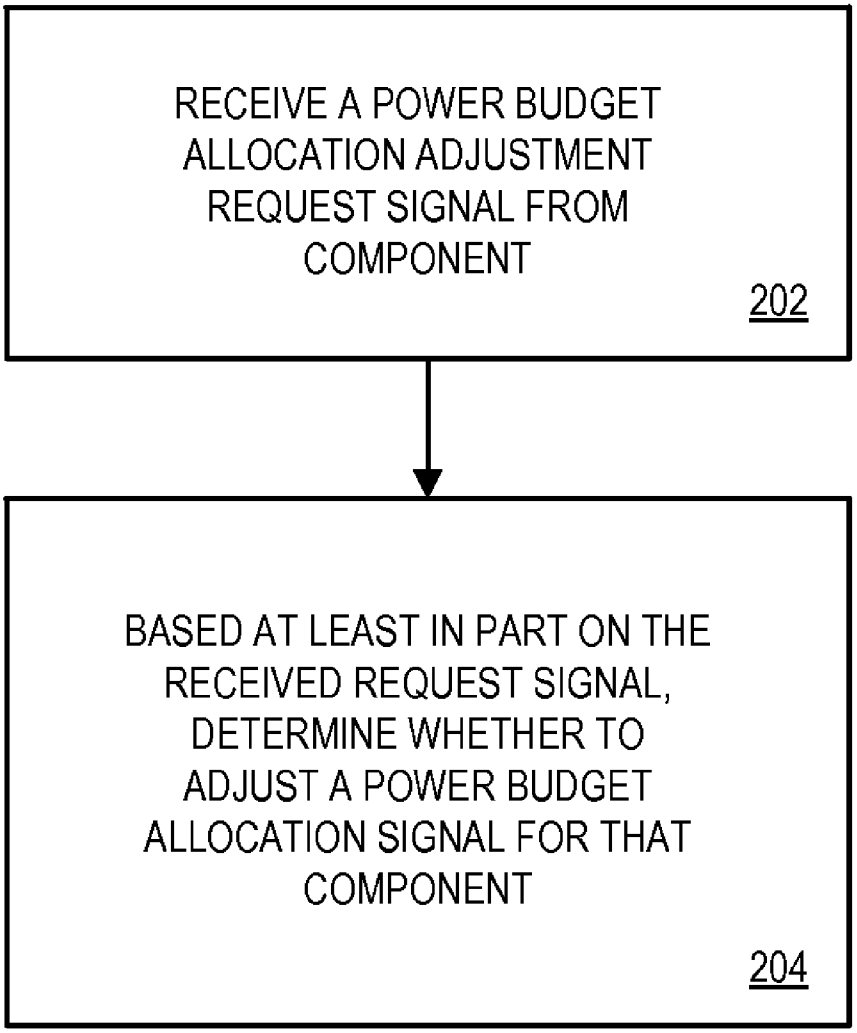
RECEIVE A POWER BUDGET ALLOCATION ADJUSTMENT REQUEST SIGNAL FROM COMPONENT
202
BASED AT LEAST IN PART ON THE RECEIVED REQUEST SIGNAL, DETERMINE WHETHER TO ADJUST A POWER BUDGET ALLOCATION SIGNAL FOR THAT COMPONENT
204

FIG. 2

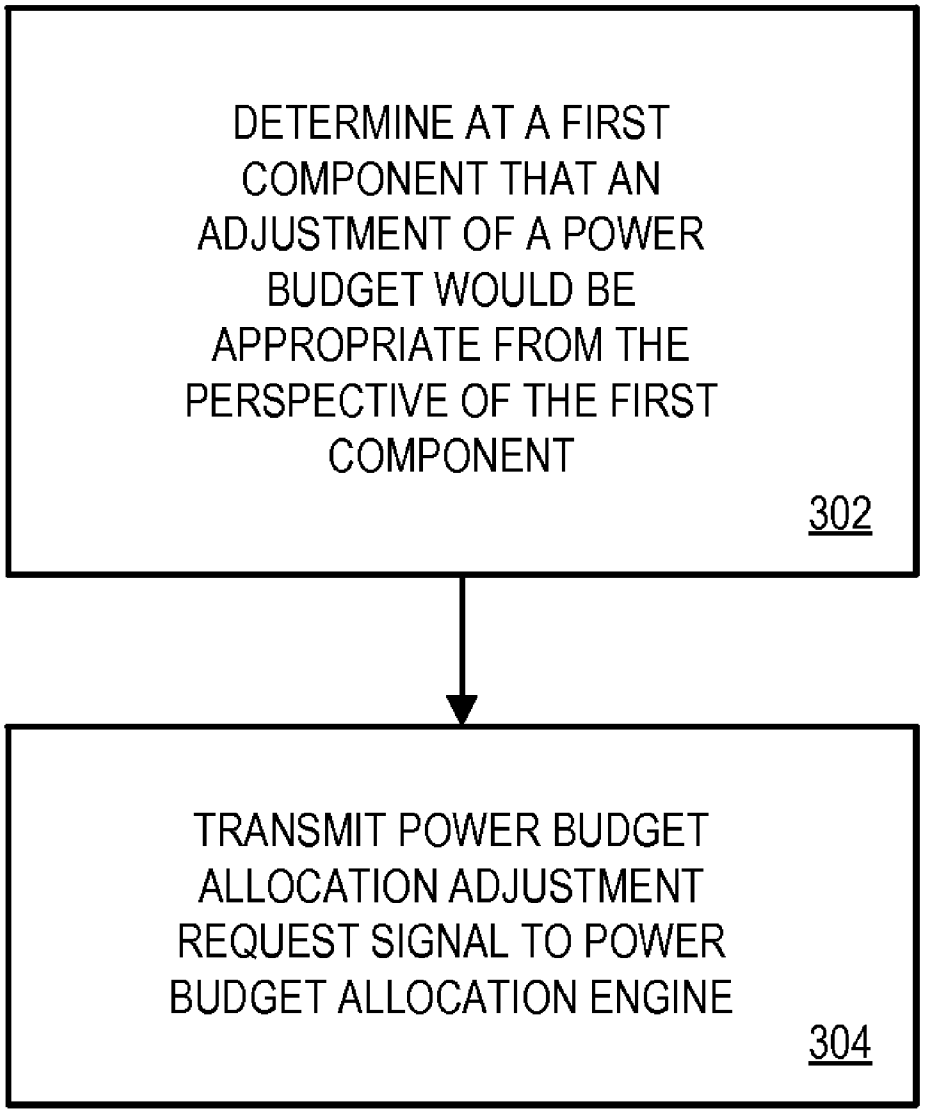
DETERMINE AT A FIRST COMPONENT THAT AN ADJUSTMENT OF A POWER BUDGET WOULD BE APPROPRIATE FROM THE PERSPECTIVE OF THE FIRST COMPONENT
302
TRANSMIT POWER BUDGET ALLOCATION ADJUSTMENT REQUEST SIGNAL TO POWER BUDGET ALLOCATION ENGINE
304

FIG. 3

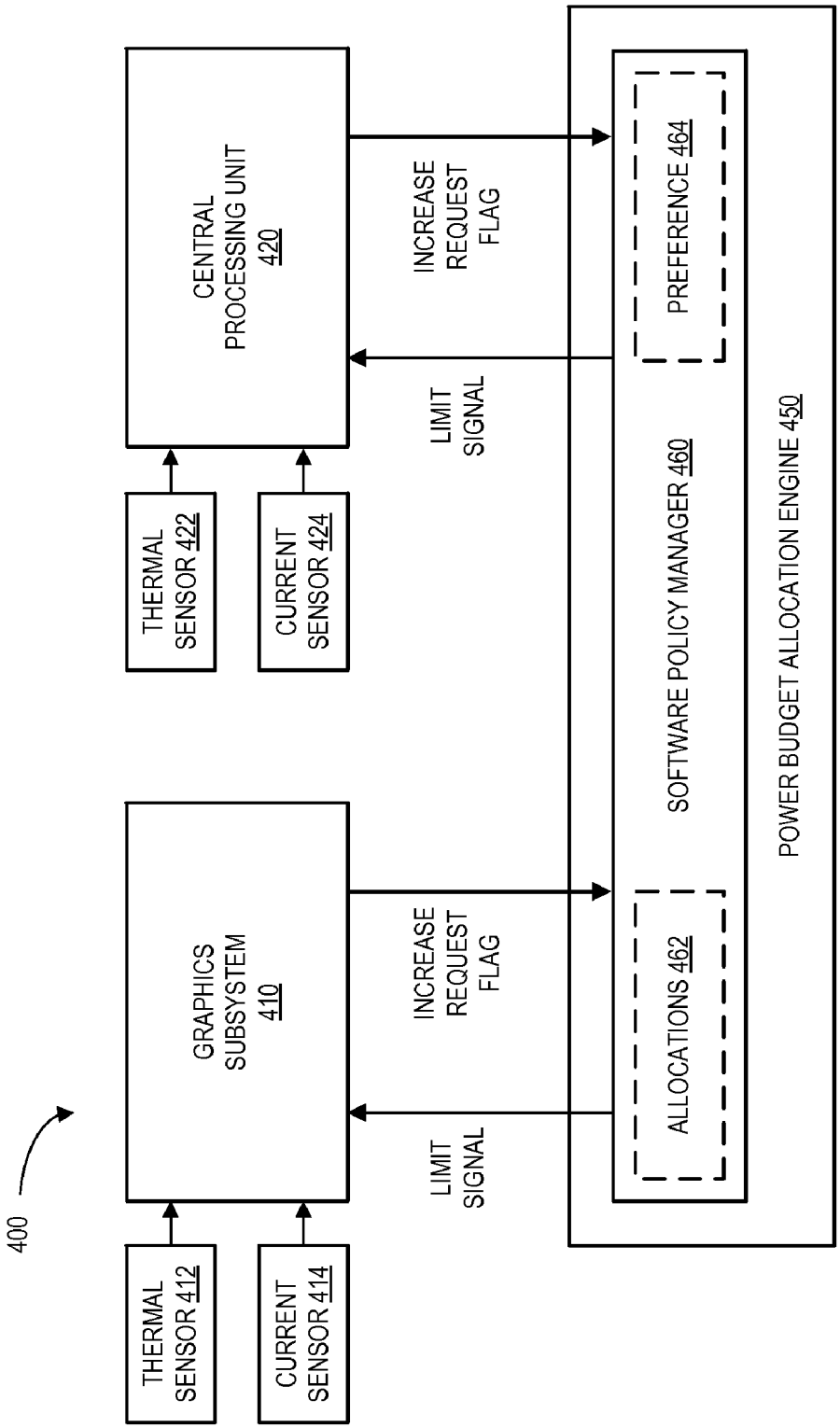
400
THERMAL SENSOR 412
CURRENT SENSOR 414
GRAPHICS SUBSYSTEM 410
LIMIT SIGNAL
INCREASE REQUEST FLAG
THERMAL SENSOR 422
CURRENT SENSOR 424
CENTRAL PROCESSING UNIT 420
LIMIT SIGNAL
INCREASE REQUEST FLAG
ALLOCATIONS 462
SOFTWARE POLICY MANAGER 460
PREFERENCE 464
POWER BUDGET ALLOCATION ENGINE 450

FIG. 4

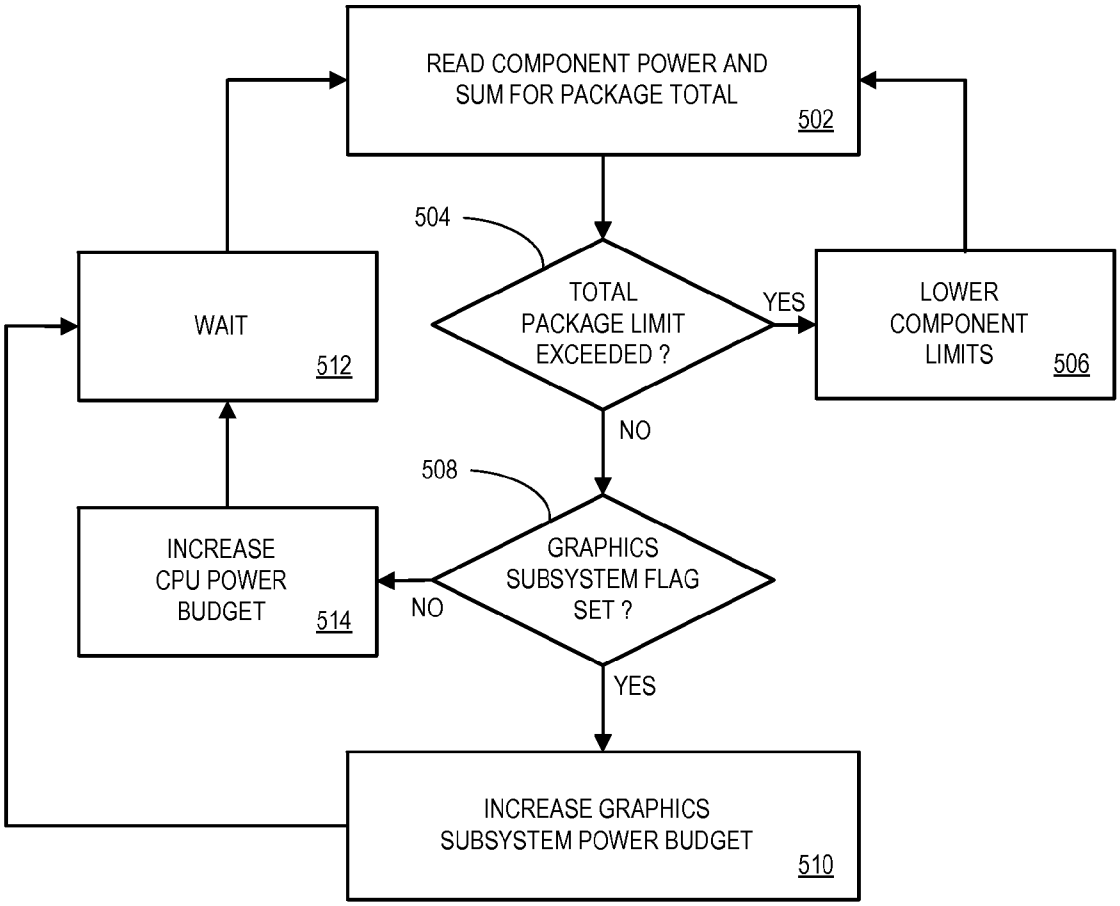
READ COMPONENT POWER AND SUM FOR PACKAGE TOTAL
502
504
TOTAL PACKAGE LIMIT EXCEEDED ?
YES
LOWER COMPONENT LIMITS
506
WAIT
512
NO
508
GRAPHICS SUBSYSTEM FLAG SET ?
NO
INCREASE CPU POWER BUDGET
514
YES
INCREASE GRAPHICS SUBSYSTEM POWER BUDGET
510

FIG. 5

ADAPTIVE POWER BUDGET ALLOCATION BETWEEN MULTIPLE COMPONENTS IN A COMPUTING SYSTEM

BACKGROUND

[0001] Components in a computing system, such as a central processing unit component and a graphics subsystem component, may consume power and generate heat as they operate. Moreover, a computing system will typically have limitations associated with how much power and/or heat should be generated during operation. For example, a computing system might have an overall power and/or thermal "budget" that can be allocated among the various components in the system. Note that exceeding such a budget might result in degraded performance and/or damage to the components in the system.

[0002] In some cases, a system-wide power or thermal management device will monitor and evaluate information about each component (e.g., statistics associated with how much power is being consumed by each component). Such a system-wide power management device may then allocate an overall power budget as appropriate. This approach, however, may have certain disadvantages. For example, a graphics subsystem might at certain times be unable to utilize additional power resources (e.g., when the graphics subsystem cannot process graphical information because it is waiting for another component—such as a central processing unit—to provide information) Similarly, the graphics subsystem might use the additional power but not provide a result that is valuable. In either case, it may be impractical to have a system-wide power management device determine the most efficient way to allocate an overall thermal budget.

BRIEF DESCRIPTION OF THE DRAWINGS

[0003] FIG. **1** is a block diagram of a multi-component computing system according to some embodiments.

[0004] FIG. **2** is a flow chart of a method associated with a power budget allocation engine in accordance with some embodiments.

[0005] FIG. **3** is a flow chart of a method associated with a component according to some embodiments.

[0006] FIG. **4** is an example of a multi-component computing system according to some embodiments.

[0007] FIG. **5** is a flow chart of a method in accordance with some embodiments.

DETAILED DESCRIPTION

[0008] Components in a computing system, such as a central processing unit component and a graphics subsystem component, may consume power and generate heat as they operate. For example, FIG. **1** is a block diagram of a system **100** that includes a first component **110** and a second component **120** according to some embodiments. Although two components **110**, **120** are illustrated in FIG. **1**, note that embodiments described herein might be associated with more components. The first component **110** might be, for example, associated with a graphics subsystem wile the second component **120** is associated with a Central Processing Unit ("CPU"). Note, however, that as used herein the term "component" might refer to any other type of device in a computing environment, including memory systems, network communication systems, and/or Input Output ("IO") IO systems.

[0009] The computing system **100** will typically have limitations associated with how much power and/or heat should be generated during operation. For example, the computing system **100** might have an overall power and/or thermal "budget" that can be allocated among the first and second components **110**, **120**. Note that as the amount of power consumed by a component increases the amount of heat generated by that component will typically also increase. As a result, embodiments described herein as being associated with a "power budget" or "power management system" also encompass the notion of a "thermal/heat budget" or "thermal/heat management system."

[0010] The system **100** further includes a power budget allocation engine **150** according to some embodiments. The power budget allocation engine **150** may, for example, facilitate an allocation of an overall power budget among the first and second components **110**, **120** as appropriate.

[0011] By way of example, the first component **110** may determine that an adjustment of a power budget allocation for the first component **110** would be appropriate from the perspective of the first component. For example, the first component **110** might determine that it is currently consuming less than a local power limitation and yet could efficiently utilize additional power. In this case, the first component **110** might transmit a power budget allocation adjustment request signal to the power budget allocation engine **150**. In other situations, the first component **110** determine that it would be unable to efficiently utilize additional power even it was available (e.g., because it isn't receiving information quickly enough from another component), and thus decide to not transmit a request for an increased allocation of the power budget. Similarly, the second component **120** might (or might not) determine that it would be able to utilize additional power and transmit a power budget allocation adjustment request signal to the power budget allocation engine **150**.

[0012] The power budget allocation engine **150** might, according to some embodiments, receive the power budget allocation adjustment request signal from the first component **110**. Moreover, based on the received budget allocation adjustment request signal, the power budget allocation engine **150** might determine whether to adjust a power budget allocation signal provided to the first component **110** (e.g., by deciding to increase a power limit imposed on the first component **110**). According to some embodiments, the power budget allocation engine **150** determines whether to adjust the power budget allocation signal provided to the first component **110** based further a pre-determined preference (e.g., indicating that graphics or computational performance should be given higher priority in the system **100**) and/or on the received budget allocation adjustment request signal received from the second component **120**.

[0013] Note that the power budget allocation engine **150** might, according to some embodiments, determine whether to adjust a power budget allocation signal provided to the first component **110** further based on a total system budget, a current aggregate thermal state (e.g., associated with an overall amount of heat being generated by the system **100**), and/or a current aggregate power state (e.g., associated with an overall amount of current being used by the system **100**). Moreover, the power budget allocation engine **150** might perform the determination on a periodic basis (e.g., once each second) and/or upon a change in a power budget allocation adjustment request signal from the first or second component **110**, **120**.

[0014] FIG. **2** is a flow chart of a method associated with a power budget allocation engine in accordance with some embodiments. The flow charts described herein do not necessarily imply a fixed order to the actions, and embodiments may be performed in any order that is practicable. The method of FIG. **2** may be associated with, for example, the system **100** described with respect to FIG. **1**. Note that any of the methods described herein may be performed by hardware, software (including lower level code, such as microcode), or a combination of hardware and software. For example, a storage medium may store thereon instructions that when executed by a machine result in performance according to any of the embodiments described herein.

[0015] At **202**, a power budget allocation engine of a multi-component computer system may receive a power budget allocation adjustment request signal from a first component. For example, the power budget allocation adjustment request signal might be an "increase request flag" that can be raised (or lowered) by the first component. Note that the first component might be associated with, by way of examples only, a processor such as a CPU or a graphics subsystem such as a Graphics and Memory Controller Hub ("GMCH").

[0016] Based on the received budget allocation adjustment request, the power budget allocation engine may determine at **204** whether to adjust a power budget allocation signal provided to the first component. The power budget allocation signal provided from the power budget allocation engine to the first component might be, for example, a limit signal or a "power clap" (e.g., an individual power limit imposed on a component that may be relaxed or raised as appropriate). Note that the determination at **204** might be dynamic (e.g., it might be performed automatically as conditions within the computing system change).

[0017] According to some embodiments, the determination at **204** is further based at least in part on a pre-defined "preference" associated with the computing system. For example, a computing system might be configured such that a graphics subsystem will typically receive preferential power allocations as compared to a CPU. In other cases, a computing system might be configured such that the CPU will receive preferential power allocations as compared to the graphics subsystem. The preference might be determined, for example, when a system is being designed or based on a selection by a user of the system (e.g., via a graphical interface).

[0018] Thus, the power budget allocation engine may work together with various system components to facilitate an efficient allocation of power. For example, FIG. **3** is a flow chart of a method that might be performed by one of those components according to some embodiments. The method of FIG. **3** may be associated with, for example, the system **100** described with respect to FIG. **1**.

[0019] At **302**, A first component of a multi-component computer system may determine that an adjustment of a power budget allocation for the first component would be appropriate from the "perspective" of the first component. Note that the first component may be aware of whether or not an additional allocation of power could be usefully consumed. For example, when the first component is associated with a graphics subsystem it might determine that it is receiving updates from another component at a relatively slow rate and, as a result, would be unable to process and update information an faster than it already is.

[0020] Based on the determination, the first component may transmit a power budget allocation adjustment request signal to a power budget allocation engine at **304**. Consider, for example, the case where the first component is associated with a graphics subsystem. In this case, the graphics subsystem might evaluate a current frame rate, render p-state, render frequency, and/or application being executed by the graphics subsystem (e.g., a graphics-intensive 3D game) before requesting an increase in its power allocation. As another example, if the first component is associated with a CPU it might evaluate an instruction execution rate and/or an application being executed by the CPU before requesting an increase in its power allocation.

[0021] The power budget allocation adjustment request signal transmitted to the power budget allocation engine might be associated with, for example, an increase request flag that can be raised (or lowered) by the first component. According to some embodiments, the first component may further determine whether or not to raise such a flag based on a thermal condition detected by the first component and/or a power consumption condition detected by the first component. For example, the first component might decide to not raise a flag asking for more power because it is currently generate too much heat (even though it would be able to process graphics information from another component faster with an increased power budget).

[0022] Thus, some embodiments may provide a control technique to allocate a shared power and/or thermal budget between multiple components such that an advantageous result is achieved. For example, if processing and graphics components share a power and/or thermal budget, an desired result might be to increase the frame rate achieved by the graphics subsystem (assuming, for example, a preference towards graphics performance). Given a preference towards processing performance, on the other hand, increasing the number of instructions retired per second (while not stalling for cache fills) might represent a more appropriate result.

[0023] Note that graphics applications typically require tasks that need to be performed by both a processor and a graphics subsystem. For example, the relationship may be configured as "consumer-producer" in that a graphics subsystem may rely on a completion of work by a processor to further the overall task. As such, in a scenario where a shared power and/or thermal budget exists among both components (and a preference towards graphics is established by a designer or user), allocating an increased amount power and/or thermal budget to the graphics subsystem may not lead to an improved result (e.g., a higher frame rate), because the performance of a CPU component is limited by its lack of budget (which, in turn may stall the graphics subsystem).

[0024] Consider, for example, FIG. **4** which provides an example of a multi-component computing system **400** according to some embodiments. The system **400** includes a graphics subsystem **410** and a CPU **420** (note, however, that system **400** could further include other components such as memory systems, network communication systems, and/or IO systems).

[0025] The computing system may **400** have a limitation associated with how much power and/or heat should be generated during operation. For example, the computing system **400** might have an overall power and/or thermal budget that can be allocated among the graphics subsystem **410** and CPU **420**. To facilitate this task, the system **400** may further include

a power budget allocation engine **450** with a software policy manager **460** according to some embodiments.

[0026] According to some embodiments, the software policy manager **460** manages a power and/or thermal budget associated with multiple components (and component software interfaces) to facilitate improved results given a system preference. Note that a component's software interface might include a power limit input (e.g., a "clamp value" indicating an upper level of power that can be used by that particular component) and an output flag that indicates whether or not that component desires additional budget. This partitioning may locate certain decisions associated with managing a power budget inside that component (and may help insulate the software policy manager **460** from component-specific information).

[0027] In the case of the graphics subsystem **410** that has implemented a demand-based selection of render frequency (e.g., render p-state), a decision to raise the "increase request" output flag (indicating more budget is desired by the graphics subsystem **410**) might be tied to an internal selection of a highest available render p-state (which could, for example, be selected by detecting utilization). The highest available render p-state may be, for example, determined via a mapping of the power limit signal imposed on the graphics subsystem **410** by the software policy manager **460**. Note that improvement of a particular figure of merit (e.g., frames per second), can be managed substantially entirely by the graphics subsystem **410**. For example, as utilization and workload (e.g., a gaming application) warrant, the render p-state might be increase to a highest level allowed by the power limit, and the graphics subsystem **410** may then raise the output flag to indicate that additional budget could be used. Similarly, if a video application is detected the output flag from the graphics subsystem **410** might indicate that no additional budget would be useful because a maximum frame rate (corresponding to the video) has already been achieved.

[0028] According to some embodiments, the software policy manager **460** executes a policy manager control loop that, given a preference **464** towards graphics performance, may successively increase the budget of the graphics subsystem **410** (e.g., the power limit signal provided to the graphics subsystem **410**), wait (e.g., for a relatively small predetermined period of time), and then check the output increase request flag to see if the graphics subsystem **410** can use more budget. If so, additional budget may provided by the software policy manager **460** and the cycle may repeat. If the graphics subsystem **410** indicates that additional budget cannot be used (e.g., the increase request flag is not raised), then the software policy manager might instead provide additional budget to the CPU **420**. The software policy manager **460** may then wait and again read the output flag from the graphics subsystem **410** to detect if additional budget can now be used (potentially due, for example, to the increase in CPU **420** budget provided in the previous cycle). Note that the CPU **420** might indicate an ability to use budget in a similar manner (e.g., and the preference of the system **400** may be is toward processing performance instead of graphics performance).

[0029] Note that a component might decide to not raise the increase request flag even when additional power could be locally used. For example, the graphics subsystem **410** might detect conditions from a local thermal sensor **412** and/or current sensor **414** that prevents it from raising the increase request flag. Similarly, the CPU **420** might detect conditions from a local thermal sensor **422** and/or current sensor **424** that prevents it from raising the increase request flag.

[0030] Also note that the software policy manager **460** may, according to some embodiments, determine whether to adjust a limit signal provided to the graphics subsystem **410** and/or the CPU **420** based various allocation parameters **462**. For example, such allocation parameters **462** might be associated with a total system budget, a current aggregate thermal state (e.g., associated with an overall amount of heat being generated by the system **400**), and/or a current aggregate power state (e.g., associated with an overall amount of current being used by the system **400**).

[0031] According to some embodiments, the software policy manager **460** makes budget adjustments automatically and/or dynamically. For example, the software policy manager **460** might make budget adjustments as conditions associated with the system **400** change (e.g., when a component raises or lowers an increase request flag). According to some embodiments, the software policy manager **460** periodically evaluates the system **400** to determine whether any power budget adjustments are appropriate.

[0032] For example, FIG. **5** is a flow chart of a method in accordance with some embodiments. In this example, it is assumed that a system includes a graphics subsystem and a CPU and that a preference for graphics performance has been established (over CPU processing performance). At **502**, amounts of power currently being consumed by various components may be read and summed to determine an overall system or package total power level. If the total power level already exceeds a total package limit at **504**, one or more component-specific limits may be lowered at **506**. Note that the lowering of component-specific limits at **506** could be performed any number of ways (e.g., limits for all components might be lower equally or on a proportional basis and/or may take into account system preferences).

[0033] If the total power level already does not currently exceed a total package limit at **504**, it is determined whether or not a graphics subsystem flag is currently set at **508** (e.g. indicating that, from the perspective of the graphics subsystem, more power could be efficiently allocated to graphics subsystem).

[0034] If the graphics subsystem flag is set at **508**, the graphics subsystem budget is increased at **510** (e.g., by increasing a limit value signal to the graphics subsystem by a pre-determined amount). If the graphics subsystem flag not set at **508**, a CPU budget is increased at **514** (e.g., by increasing a limit value signal to the CPU by a pre-determined amount). Note that the increase allocation is first given to the graphics subsystem instead of the CPU (assuming that the graphics subsystem is able to utilize the increase) because the preference of the system was established to be towards graphics performance. After the graphics or CPU power budgets are increased, the system may wait at **512** for a pre-determined period of time before repeating the cycle.

[0035] Thus, embodiments described herein may provide systems and methods to efficiently allocate a power budget amount multiple components. Moreover, a power budget allocation engine may facilitate the process without needing to evaluate component-specific parameters.

[0036] The following illustrates various additional embodiments. These do not constitute a definition of all possible embodiments, and those skilled in the art will understand that many other embodiments are possible. Further, although the following embodiments are briefly described for clarity, those

skilled in the art will understand how to make any changes, if necessary, to the above description to accommodate these and other embodiments and applications.

[0037] For example, although some embodiments have been described with respect to particular components, any other types of components may be evaluated and/or allocated power. Moreover, other types of allocation algorithms may be provided instead of, or in addition to, those described herein.

[0038] Moreover, some embodiments are described as using an "increase request flag" from a component. Note, however, that any embodiment might instead use "decrease request flags" from components (e.g., indicating that the component is currently being allocated more power than it can efficient use). Similarly, although some embodiments are described as implementing a "component preference," in other cases an indication of a "least-preferred component" could be employed (e.g., one component might be designated as being least important in a system having three components). Moreover, according to still other embodiments, power budget allocation request signals might be transmitted component-to-component and/or a single device may act as both a first component and a power budget allocation engine.

[0039] The several embodiments described herein are solely for the purpose of illustration. Persons skilled in the art will recognize from this description other embodiments may be practiced with modifications and alterations limited only by the claims.

What is claimed is:

1. A method, comprising:

receiving, at a power budget allocation engine of a multi-component computer system, a power budget allocation adjustment request signal from a first component; and

based on the received budget allocation adjustment request, determining at the power budget allocation engine whether to adjust a power budget allocation signal provided to the first component.

2. The method of claim **1**, wherein said determining is based at least in part on a pre-defined component preference associated with the multi-component computing system.

3. The method of claim **1**, wherein the power budget allocation signal provided from the power budget allocation engine to the first component comprises a limit signal.

4. The method of claim **1**, wherein the power budget allocation adjustment request signal provided from the first component to the power budget allocation engine comprises an increase request flag.

5. The method of claim **1**, wherein the first component is associated with at least one of: (i) a processor, (ii) a graphics subsystem, (iii) a central processing unit, or (iv) a graphics and memory controller.

6. The method of claim **1**, wherein said determining is based at least in part on a budget allocation adjustment request signal received from another component.

7. The method of claim **1**, wherein said determining is based at least in part on a total system budget and at least one of: (i) a current aggregate thermal state, or (ii) a current aggregate power state.

8. The method of claim **1**, wherein said determining is performed by a software policy manager of the power budget allocation engine.

9. The method of claim **1**, wherein said determining is performed at least one of: (i) on a periodic basis, or (ii) upon a change in a power budget allocation adjustment request signal from a component.

10. A method, comprising:

determining, at a first component of a multi-component computer system, that an adjustment of a power budget allocation for the first component would be appropriate from the perspective of the first component; and

based on said determination, transmitting a power budget allocation adjustment request signal to a power budget allocation engine of the multi-component system.

11. The method of claim **10**, wherein the first component is associated with a graphics subsystem and said determining is associated with at least one of: (i) a frame rate, (ii) a render p-state, (iii) a render frequency, or (iv) an application being executed by the graphics subsystem.

12. The method of claim **10**, wherein the first component is associated with a processing unit and said determining is associated with at least one of: (i) an instruction execution rate, or (iv) an application being executed by the processing unit.

13. The method of claim **10**, wherein said transmitting comprises raising an increase request flag to the power budget allocation engine.

14. The method of claim **10**, wherein said determining is further based on at least one of: (i) a thermal condition detected by the first component, or (ii) a power consumption condition detected by the first component.

15. An apparatus, comprising:

a first component to: (i) determine that an adjustment of a power budget allocation for the first component would be appropriate from the perspective of the first component, and (ii) based on the determination, transmit a power budget allocation adjustment request signal; and

an output, coupled to the first component, to provide the power budget allocation adjustment request signal.

16. The apparatus of claim **15**, further comprising:

a second component; and

a power budget allocation engine, coupled to the first and second components, to: (i) receive the power budget allocation adjustment request signal from the first component, and (ii) based on the received budget allocation adjustment request signal and component preference, determine whether to adjust a power budget allocation signal provided to the first component.

17. The apparatus of claim **16**, wherein the second component is to: (i) determine that an adjustment of a power budget allocation for the second component would be appropriate from the perspective of the second component, and (ii) based on the determination, transmit a power budget allocation adjustment request signal.

18. The apparatus of claim **17**, wherein the power budget allocation engine determines whether to adjust the power budget allocation signal provided to the first component based further on the received budget allocation adjustment request signal received from the second component.

19. The apparatus of claim **16**, wherein the first component is associated with a graphics subsystem and the second component is associated with a processing unit.

20. The apparatus of claim **16**, wherein the power budget allocation engine determines whether to adjust a power budget allocation signal provided to the first component further based on a total system budget and at least one of: (i) a current aggregate thermal state, or (ii) a current aggregate power state.

21. The apparatus of claim **16**, wherein the power budget allocation engine performs the determination at least one of:

(i) on a periodic basis, or (ii) upon a change in a power budget allocation adjustment request signal from a component.

22. An apparatus, comprising:

a power budget allocation engine to: (i) receive a power budget allocation adjustment request signal from a first component, and (ii) based on the received budget allocation adjustment request signal and component preference, determine whether to adjust a power budget allocation signal provided to the first component; and

an output line, coupled to the power budget allocation engine, to provide the power budget allocation signal.

23. The apparatus of claim **22**, wherein the power budget allocation engine determines whether to adjust a power budget allocation signal provided to the first component further based on a total system budget and at least one of: (i) a current aggregate thermal state, or (ii) a current aggregate power state.

24. The apparatus of claim **22**, wherein the power budget allocation engine performs the determination at least one of: (i) on a periodic basis, or (ii) upon a change in a power budget allocation adjustment request signal from a component.

* * * * *