IN THE UNITED STATES PATENT AND TRADEMARK OFFICE

In re Patent of:	Gregory G. Raleigh, et al.	
U.S. Patent No.:	9,521,578	Attorney Docket No.: 39843-0157IP1
Issue Date:	December 13, 2016	
Appl. Serial No.:	14/689,512	
Filing Date:	April 17, 2015	
Title:	WIRELESS END-USER DEVICE WITH APPLICATION PROGRAM INTERFACE TO ALLOW APPLICATIONS TO ACCESS APPLICATION-SPECIFIC ASPECTS OF A WIRELESS NETWORK ACCESS POLICY	

Mail Stop Patent Board
Patent Trial and Appeal Board
U.S. Patent and Trademark Office
P.O. Box 1450
Alexandria, VA 22313-1450

PETITION FOR *INTER PARTES* REVIEW OF UNITED STATES PATENT NO. 9,521,578 PURSUANT TO 35 U.S.C. §§ 311–319, 37 C.F.R. § 42

TABLE OF CONTENTS

I. REQUIREMENTS FOR IPR 1
- **A.** Grounds for Standing 1
- **B.** Challenge and Relief Requested 1
- **C.** Claim Construction 2

II. THE '578 PATENT 2
- **A.** Brief Description 2
- **B.** Prosecution History 4

III. THE CHALLENGED CLAIMS ARE UNPATENTABLE 5
- **A.** GROUND 1: Rao-Oestvall-Montemurro Renders Claims 1-22 Obvious 5
  - 1. Rao 5
  - 2. Oestvall 9
  - 3. Rao-Oestvall 12
  - 4. Montemurro 16
  - 5. Rao-Oestvall-Montemurro 19
  - 6. Analysis 21

IV. PTAB DISCRETION SHOULD NOT PRECLUDE INSTITUTION 77
- **A.** 35 U.S.C. §325(d) 77
- **B.** 35 U.S.C. §314(a) 78

V. CONCLUSION AND FEES 79

VI. MANDATORY NOTICES UNDER 37 C.F.R § 42.8(a)(1) 80
- **A.** Real Party-In-Interest Under 37 C.F.R. § 42.8(b)(1) 80
- **B.** Related Matters Under 37 C.F.R. § 42.8(b)(2) 80
- **C.** Lead And Back-Up Counsel Under 37 C.F.R. § 42.8(b)(3) 80
- **D.** Service Information 81

EXHIBITS

SAMSUNG-1001	U.S. Patent No. 9,521,578 to Raleigh, et al. ("the '578 Patent")
SAMSUNG-1002	Excerpts from the Prosecution History of the '578 Patent ("the Prosecution History")
SAMSUNG-1003	Declaration and Curriculum Vitae of Patrick McDaniel
SAMSUNG-1004	Complaint, *Headwater Research LLC v. Samsung Electronics Co., Ltd. et al.*, 2:22-cv-00422, E.D. Tex., October 26, 2022
SAMSUNG-1005	U.S. Pat. App. Pub. No. 2006/0039354 ("Rao")
SAMSUNG-1006	U.S. Pat. App. Pub. No. 2007/0038763 ("Oestvall")
SAMSUNG-1007	U.S. Pat. App. Pub. No. 2009/0207817 ("Montemurro")
SAMSUNG-1008	RESERVED
SAMSUNG-1009	U.S. Pat. App. Pub. No. 2008/0080458 ("Cole")
SAMSUNG-1010	U.S. Pat. No. 5,987,611 ("Freund")
SAMSUNG-1011	U.S. Pat. App. Pub. No. 2009/0217065 ("Araujo")
SAMSUNG-1012	U.S. Pat. No. 7,821,985 ("Van Megen")
SAMSUNG-1013	U.S. Pat. App. Pub. No. 2008/0101293 ("Woo")
SAMSUNG-1014	U.S. Pat. App. Pub. No. 2007/0173283 ("Livet")
SAMSUNG-1015	U.S. Pat. No. 8,381,127 ("Singh")

SAMSUNG-1016	Flinn, Jason, et al. "The case for intentional networking," Proceedings of the 10th Workshop on Mobile Computing Systems and Applications, 2009 ("Flinn")
SAMSUNG-1017	RESERVED
SAMSUNG-1018	U.S. Pat. No. 8,407,345 ("Lim")
SAMSUNG-1019	U.S. Pat. App. Pub. No. 2009/0019022 ("Schallert")
SAMSUNG-1020	David Flanagan, O'Reilly & Associates, Inc., "Java in a Nutshell," 1996, ISBN: I-56592-183-6
SAMSUNG-1021	W. Richard Stevens, et. al, "UNIX Network Programming Volume 1, Third Edition: The Sockets Networking API," 2004, ISBN: 0-13-141155-1
SAMSUNG-1022	U.S. Pat. App. Pub. No. 2009/0093247 ("Srinivasan")
SAMSUNG-1023	U.S. Pat. App. Pub. No. 2008/0311897 ("Segal")
SAMSUNG-1024	Buxton, B., "Integrating the Periphery and Context: A New Model of Telematics," in Proceedings of Graphics Interface '95, 1995
SAMSUNG-1025	Hinckley et al., "Foreground and background interaction with sensor-enhanced mobile devices," ACM Trans. Comput. Hum. Interact., vol. 12, no. 1, pp. 31–52, Mar. 2005
SAMSUNG-1026	International Publication No. WO 03/100581 ("Dive-Reclus")
SAMSUNG-1027	U.S. Pat. No. 7,757,185 ("Paquette")
SAMSUNG-1028	Westerinen, et al., IETF RFC 3198, Terminology for Policy-Based Management, November 2001, available at https://www.ietf.org/rfc/rfc3198.txt

SAMSUNG-1029	Durham, et. al., IETF RFC 2748, "The COPS (Common Open Policy Service) Protocol," January 2000, downloaded from the internet at https://www.rfc-editor.org/rfc/rfc2748.html on August 1, 2023
SAMSUNG-1030	First Amended Docket Control Order, *Headwater Research LLC v. Samsung Electronics Co., Ltd. et al.*, 2:22-cv-00422, E.D. Tex., April 21, 2023
SAMSUNG-1031	Memorandum, Interim Procedure for Discretionary Denials in AIA Post-Grant Proceedings with Parallel District Court Litigation (USPTO June 21, 2022) ("Director's Guidance")
SAMSUNG-1032	Samsung Stipulation letter regarding IPR grounds in District court litigation
SAMSUNG-1033	First Amended Complaint, *Headwater Research LLC v. Samsung Electronics Co., Ltd. et al.*, 2:22-cv-00422, E.D. Tex., November 30, 2022
SAMSUNG-1034	W. Richard Stevens, UNIX Network Programming, Prentice Hall, 1990
SAMSUNG-1035	A. Freier, et al., The Secure Sockets Layer (SSL) Protocol Version 3.0, Internet Engineering Task Force (IETF), Request for Comments: 6101, ISSN: 2070-1721, August 2011, available at https://datatracker.ietf.org/doc/html/rfc6101

LISTING OF CHALLENGED CLAIMS

Claim 1	
[1pre]	A wireless end-user device, comprising:
[1a]	a wireless wide area network (WWAN) modem to communicate data for Internet service activities between the device and at least one WWAN, when configured for and connected to the at least one WWAN;
[1b]	a wireless local area network (WLAN) modem to communicate data for Internet service activities between the device and at least one WLAN, when configured for and connected to the at least one WLAN;
[1c]	a non-transitory memory to store a differential traffic control policy applicable to data communicated for Internet service activities using the WWAN modem and the at least one WWAN, but not applicable to data communicated for Internet service activities using the WLAN modem and the at least one WLAN;
[1d]	a user interface to allow a user to set one or more of a plurality of aspects of the differential traffic control policy to select one or more applications that are only allowed to utilize the at least one WWAN

	for Internet service activities when those applications are classified as interacting with a user in the device user interface foreground; and
[1e]	one or more processors configured to implement an application program interface (API) that allows a particular application to access one or more aspects of the differential traffic control policy applicable to that application, including whether the user-settable aspects of the policy only allow the particular application to utilize the at least one WWAN for Internet service activities when the particular application is classified as interacting with a user in the device user interface foreground.
Claim 2	
[2]	The wireless end-user device of claim 1, the one or more processors further configured to implement a network stack agent to apply the differential traffic control policy to Internet data service provided using the WWAN modem and the at least one WWAN, such that an Internet service access request associated with at least one application that is not classified as interacting with a user in the device interface foreground is blocked, based at least on a user-settable aspect of the differential traffic control policy for that application.
Claim 3	

[3]	The wireless end-user device of claim 1, the API further to indicate, to the particular application, one or more network access conditions based on the differential traffic control policy, wherein the one or network access conditions include a network access condition that indicates the unavailability to the particular application of an Internet data service that is currently available via the WWAN modem to a different application.
Claim 4	
[4]	The wireless end-user device of claim 1, wherein the one or more processors are further configured to classify that the particular application is interacting with the user in the device user interface foreground when a user of the device is directly interacting with the particular application or perceiving any benefit from the particular application.
Claim 5	
[5]	The wireless end-user device of claim 1, wherein the one or more processors are further configured to classify that the particular application is interacting with the user in the device user interface foreground based on a state of user interface priority for the application.
Claim 6	

[6]	The wireless end-user device of claim 1, wherein the one or more processors are further configured to classify that the first end-user application is not interacting with the user in the device user interface foreground when the application is providing or utilizing a background data service.
Claim 7	
[7]	The wireless end-user device of claim 1, the user interface to provide a user of the device with information regarding why the differential traffic control policy is applied to the particular application.
Claim 8	
[8]	The wireless end-user device of claim 1, wherein the differential traffic control policy is part of a multimode profile having different policies for different networks.
Claim 9	
[9]	The wireless end-user device of claim 8, wherein the one or more processors are further configured to select a traffic control policy from the multimode profile based at least in part on the type of network connection currently in use by the device.
Claim 10	

[10]	The wireless end-user device of claim 9, wherein the one or more processors are further configured to, when the type of network connection is at least one type of WLAN connection, select a traffic control policy from the multimode profile based at least in part on a type of network connection from the WLAN to the Internet.
Claim 11	
[11]	The wireless end-user device of claim 8, wherein the differential traffic control policy is the policy for a roaming WWAN network, the multimode profile having a second traffic control policy for a home WWAN network.
Claim 12	
[12]	The wireless end-user device of claim 1, the one or more processors further comprising a network stack interface in communication with the API.
Claim 13	
[13]	The wireless end-user device of claim 1, further comprising a networking stack, wherein the one or more processors are further configured to, at an application service interface layer, identify application traffic flows prior to the flows entering the networking stack.

Claim 14	
[14]	The wireless end-user device of claim 1, wherein the API comprises a network access API.
Claim 15	
[15]	The wireless end-user device of claim 1, wherein the API further allows the particular application to access information indicating whether a current connected WWAN is a roaming network or a non-roaming network.
Claim 16	
[16]	The wireless end-user device of claim 1, wherein the API further informs the particular application when it is allowed to access Internet data service that is currently available via the WWAN modem.
Claim 17	
[17]	The wireless end-user device of claim 1, wherein the API informs the particular application of one or more network traffic controls that the application is expected to implement.
Claim 18	
[18]	The wireless end-user device of claim 1, wherein the API instructs the particular application to transition to a different state.

Claim 19	
[19]	The wireless end-user device of claim 1, wherein the one or more processors are configured to associate the particular application with the differential traffic control policy based on an application behavior.
Claim 20	
[20]	The wireless end-user device of claim 1, the API comprising a network stack interface that intercepts network socket interface messages for applications and OS functions, the one or more processors configured to apply the differential traffic control policy to at least some of the intercepted network socket interface messages.
Claim 21	
[21]	The wireless end-user device of claim 1, wherein the one or more processors are further configured to update the differential traffic control policy based on information received from a network element.
Claim 22	

[22]	The wireless end-user device of claim 1, wherein the one or more processors are configured to apply the differential traffic control policy to selectively block network access by the particular application by intercepting open, connect, and/or write requests by the particular application to a network stack.

Samsung Electronics Co., Ltd. ("Petitioner" or "Samsung") petitions for *Inter Partes* Review ("IPR") of claims 1-22 ("the Challenged Claims") of U.S. Patent No. 9,521,578 ("the '578 Patent").

I. REQUIREMENTS FOR IPR

A. Grounds for Standing

Petitioner certifies that the '578 Patent is available for IPR. Petitioner is not barred or estopped from requesting this review. Petitioner was served with a complaint of infringement of the '578 Patent less than one year ago. SAMSUNG-1004.

B. Challenge and Relief Requested

Samsung requests an IPR of the Challenged Claims on the grounds noted below. Dr. McDaniel provides supporting testimony in his Declaration. SAMSUNG-1003, ¶¶17-18, 29-194.

Ground	Claims	§103
1	**1-22**	Rao, Oestvall, Montemurro

The '578 Patent claims priority to several provisional applications as early as 1/28/2009 ("Critical Date"). SAMSUNG-1002, Cover. Petitioner does not concede that the Critical Date is the priority date of the '578 Patent. The references are prior art under §§102(a), 102(b), and/or 102(e).

Reference	Date	Basis
Rao	2/23/2006	§102(b)
Oestvall	2/15/2007	§102(b)
Montemurro	2/15/2008	§102(e)

C. Claim Construction

No formal claim constructions are necessary because "claim terms need only be construed to the extent necessary to resolve the controversy." *Wellman, Inc. v. Eastman Chem. Co.*, 642 F.3d 1355, 1361 (Fed. Cir. 2011). Petitioner reserves the right to respond to any constructions offered by Patent Owner or adopted by the Board. Petitioner is not conceding that each challenged claim satisfies all statutory requirements, nor is Petitioner waiving any arguments concerning claim scope or grounds that can only be raised in district court. For this petition, Petitioner applies prior art in a manner consistent with Patent Owner's allegations of infringement before the district court.

II. THE '578 PATENT

A. Brief Description

The '578 Patent provides "a wireless end-user device that has wireless wide-area network (WWAN) and wireless local-area network (WLAN) modems." SAMSUNG-1001, Abstract; SAMSUNG-1003, ¶¶41-43.

The system "analyzes traffic from [a] network service consuming application," and "categorize[s] the traffic" based on various criteria, such as "network type, time of day, connection cost, whether home or roaming, network busy state, QoS, and whether the particular service usage activity is in foreground of user interaction or in the background of user interaction." *Id.*, 103:16-67. The system uses one or more policies to "determine an appropriate prioritization for traffic to and/or from the network service consuming application." *Id.*, 104:8-23. The system can selectively (i) "cause[] the network service consuming application ... traffic to be queued in [an] application traffic cache" for transmission over a network or (ii) "restrict network access of a particular service usage activity." *Id.*, 104:24-43.

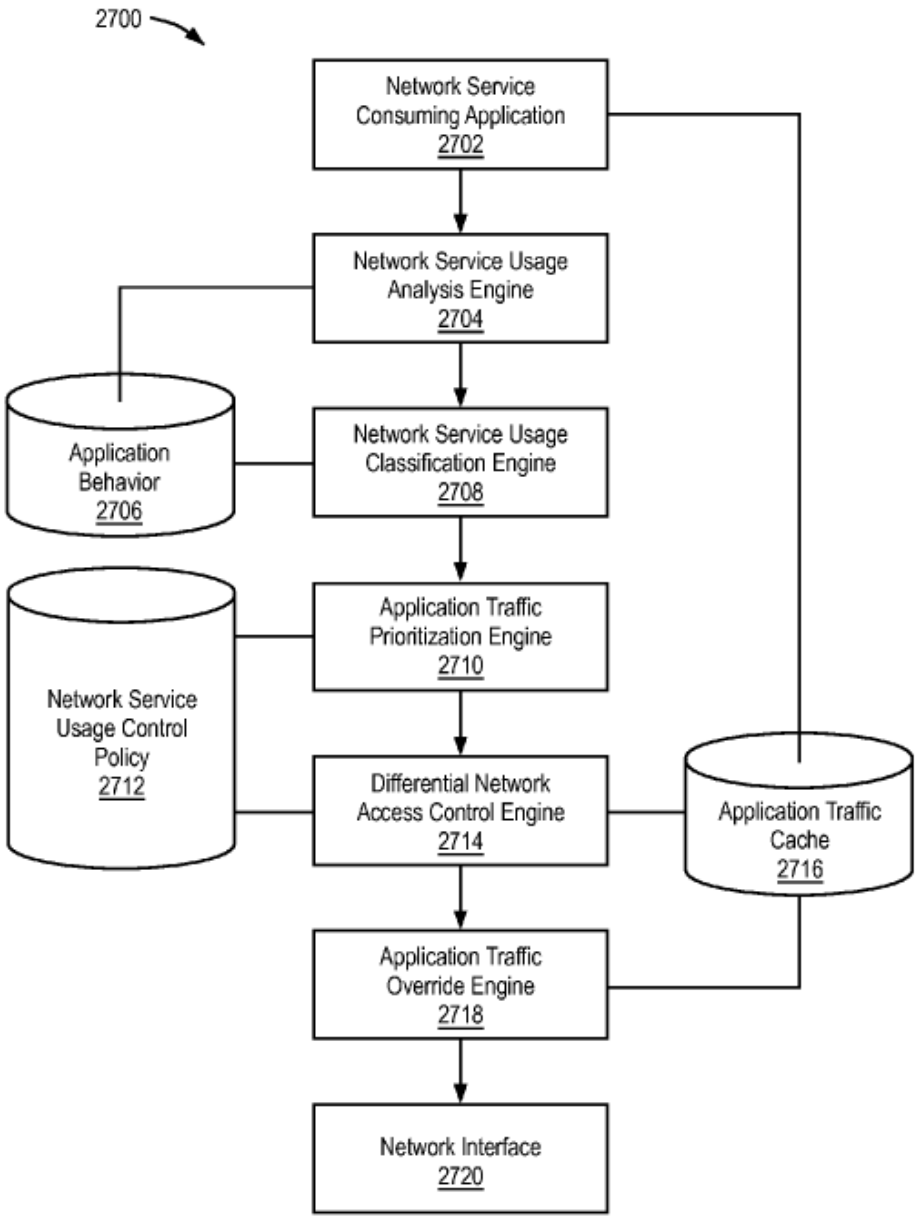

SAMSUNG-1001, Figure 27

B. Prosecution History

The ’578 Patent received a first action allowance. SAMSUNG-1002, 306-312. The Examiner did not consider Rao, Oestvall, or Montemurro. *See, generally,* SAMSUNG-1002; SAMSUNG-1003, ¶44.

III. THE CHALLENGED CLAIMS ARE UNPATENTABLE

A. GROUND 1: Rao-Oestvall-Montemurro Renders Claims 1-22 Obvious

1. Rao[1]

Rao describes a "remote access architecture" for a system that provides "peer-to-peer communications and remote access connectivity." SAMSUNG-1005, Abstract. In Rao, clients 105 (instances of computing devices 102) communicate with each other over a network 104 and with other computing devices, such as servers 102e and server farms 102n. *Id.*, [0086]-[0096], Figure 1A; SAMSUNG-1003, ¶¶46-48.

[1] Descriptions of the references and combinations thereof are incorporated into each mapping that includes citations to these references. All emphasis is added unless otherwise indicated.

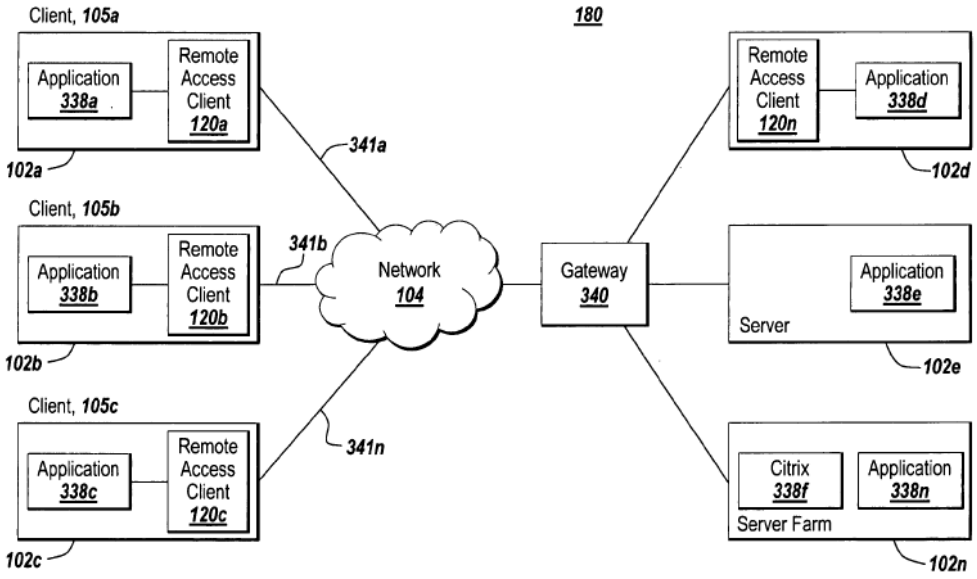

SAMSUNG-1005, Figure 1A

Rao addresses inefficient use of network resources when communications between devices are "processed in the order generated by the activity of a user and applications of the client," which is not "always desirable" since "a network packet generated or received for an application running in the background may be processed ahead of a network packet generated or received for the application running in the foreground." SAMSUNG-1005, [0001]. This results in increased latency and reduced the quality of voice communication. *Id.*; SAMSUNG-1003, ¶49.

Rao contemplates addressing these network inefficiencies through a prioritizations scheme that "provide[s] application-aware, client-specific prioritization of packet traffic." SAMSUNG-1005, [0003]. The prioritization scheme is achieved

by augmenting client 105 with a remote access client 120 that interacts with applications 338 and network stack 310. SAMSUNG-1005, [0100]; SAMSUNG-1003, ¶50.

Figure 1C shows an example of a system with a remote access client for routing network packets from client 105 to network 104. SAMSUNG-1003, ¶51

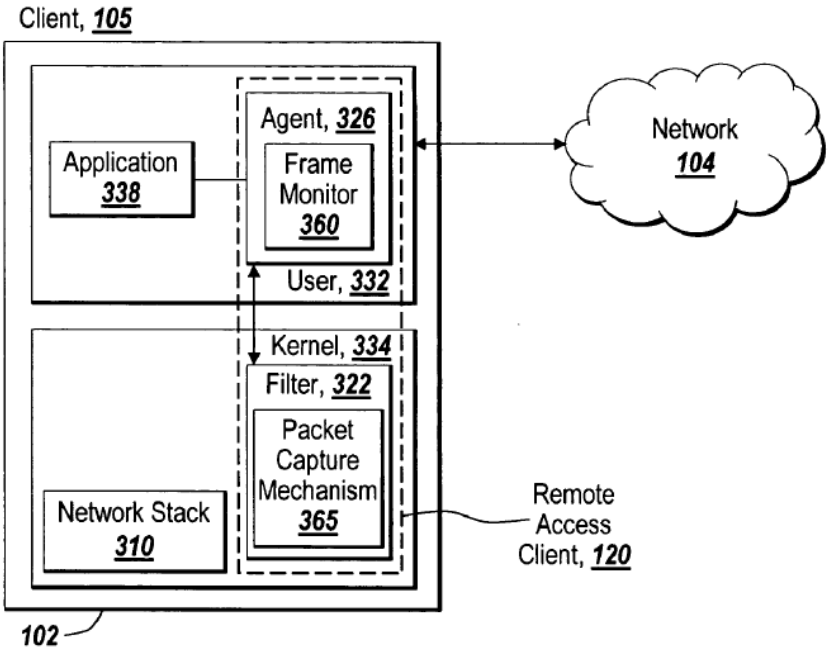

SAMSUNG-1005, Figure 1C

Remote access client 120 includes filter 322 that uses a filtering table "to determine what action to take against packets," including "ensur[ing] that unwanted packets are discarded" and "deny[ing] access to particular protocols or to prevent unauthorized access from remote computers by discarding packets to specified destination addresses." SAMSUNG-1005, [0102]. Agent 326 with frame monitor 360 "include[s] policies and logic for applying a policy to a received packet." *Id.*,

[0108]. Frame monitor 360 also "transmit[s] a packet to a gateway 340 responsive to a policy-based determination made by the frame monitor 360." *Id.* Use of policies through remote access client 120 guides efficient use of network resources. SAMSUNG-1003, ¶52.

Rao's client-side application-aware network communication system enables "intelligent and client centric prioritization of application network communications on a client based on the type and/or priority of an application." SAMSUNG-1005, [0179], Figure 5A. To perform prioritization, Rao "appl[ies] a policy to determine a condition of the client 105, or endpoint, at the time of transmission of the packet." SAMSUNG-1005, [0109]; SAMSUNG-1003, ¶53.

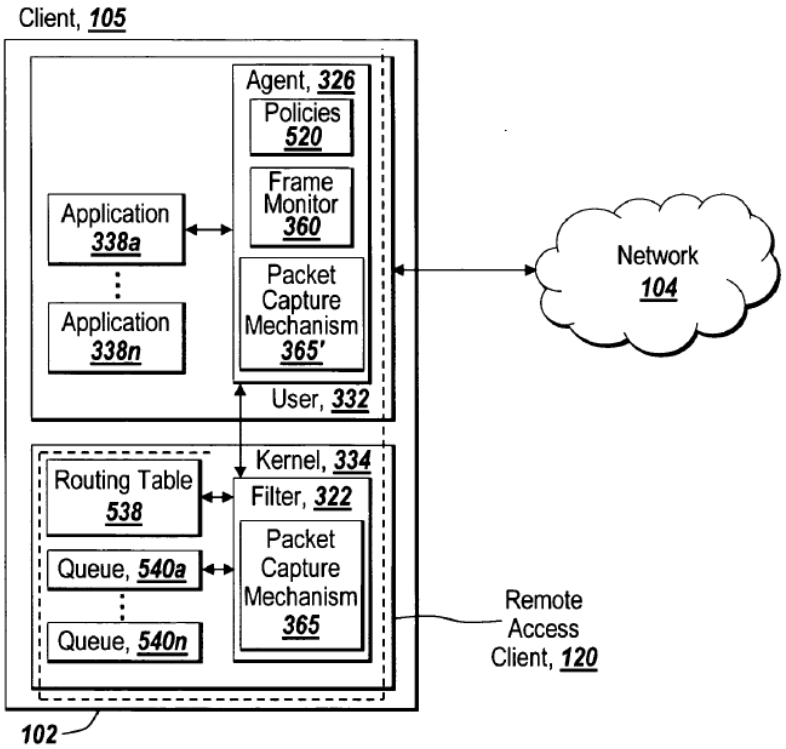

SAMSUNG-1005, Figure 5A

Rao offers non-limiting disclosure relating to the specification of policies 520 and how its system leverages each of these policies 520 for prioritization. SAMSUNG-1005, [0182]; SAMSUNG-1003, ¶54. As examples, Rao's policies 520 can be specified by "name of the application," "type of application," or "type of one or more protocols used by the applications." SAMSUNG-1005, [0182]. Policies can "define prioritization based on whether an application is running in the foreground or the background of the client," "indicate prioritization based on the destination network address, such as host name or IP address, and/or destination port number," and be "specified conditionally, such as if one application 338a is running, a second application 338b may have a higher or lower priority." *Id.* Rao recognizes the "multitude of ways to define client-side application priorities." *Id.* Policies 520 can be used to "determine which packets to queue and/or discard." *Id.*, [0207]. Thus, policies can "apply a priority to network packets of applications 338a-338n in accordance with the prioritization rules specified or indicated by the policies." *Id.*; SAMSUNG-1003, ¶54.

2. Oestvall

Oestvall describes techniques to "preserve or conserve resources, such as battery power" on mobile devices. SAMSUNG-1006, [0002]. Oestvall emphasizes that battery consumption is "very important," particularly in devices that

"consume high power levels by virtue of connecting to always-on GPRS or 3G cellular networks," which is "especially acute for multi-tasking devices." *Id.*, [0004], [0007]. This occurs since conventional schedulers used for multitasking may be configured such that "applications will continue to run even when not actually in active use," resulting in the applications continuing to "use some system resources, even when residing in the 'background.'" *Id.*, [0006]; SAMSUNG-1003, ¶¶55-56.

Oestvall addresses power consumption challenges by "denying system resources and services to background applications that do not meet predefined 'trust' or certification criteria" (i.e., "untrusted" applications). SAMSUNG-1006, [0010], Figure 1 (below). Examples of untrusted applications include those unable "to access certain predefined protected resources" and those not validated using a "predefined validation or certification process." *Id.*, [0011]-[0013]; SAMSUNG-1003, ¶57.

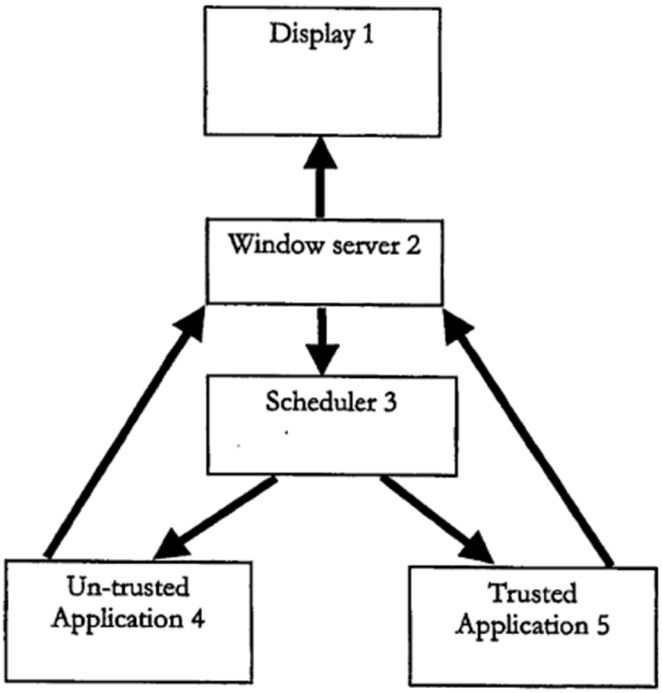

SAMSUNG-1006, Figure 1

A window server component determines "if an application is in the background or foreground on display." SAMSUNG-1006, [0023]. If the application is untrusted and is running in the background, then the window server component "send[s] a control signal to the scheduler" that prevents it from "running, e.g., being given any services or consuming any resources." *Id.* Oestvall offers several non-limiting examples for how the scheduler regulates access to resources by a background untrusted application. *Id*. As examples, the scheduler may "place any interrupts from [the application] to the back of its queue and never allow them to be executed." *Id.*, [0023]-[0024]. When an application is in the foreground, the

application is permitted to "run again—e.g., to be provided with resources and services." *Id.*, [0025]; SAMSUNG-1003, ¶58.

3. Rao-Oestvall

As described above, Rao describes applying policies to prioritize transmission of higher-priority network packets over lower-priority network packets. SAMSUNG-1005, [0179]-[0195], Figure 5A. While Rao teaches that such prioritization techniques would have improved the efficient utilization of network resources, a person of ordinary skill in the art (POSITA)[2] would have further understood that the prioritization techniques may have implications not specifically addressed in Rao. SAMSUNG-1003, ¶65. For instance, by the Critical Date, a POSITA would have recognized that Rao's prioritization techniques reduces congestion and improved packet throughput. *Id.*; SAMSUNG-1005, [0195]. But Rao does not expressly account for application states in its prioritization techniques, and by the Critical Date, a POSITA would have understood and found obvious that application states similarly impact the problems addressed in Rao, such as network usage efficiency. SAMSUNG-1003, ¶65. A POSITA looking to implement Rao would have therefore been motivated to look to solutions to improve Rao's packet-based prioritization techniques. *Id.*

In seeking solutions, a POSITA would have identified Oestvall, which, like

[2] SAMSUNG-1003, ¶¶17-18 (defining a POSITA).

Rao, is broadly focused on achieving efficiencies associated with mobile device operation. SAMSUNG-1003, ¶66; SAMSUNG-1006, [0002]. Oestvall further offers techniques to "preserve[] system resources by denying system resources and services" to certain applications. SAMSUNG-1006, [0010]. A POSITA would have found obvious integration of Oestvall's resource conservation techniques into the Rao system to promote more efficient peer-to-peer communications and network access connectivity that also reduces power consumption on a mobile device. SAMSUNG-1003, ¶66. As explained below, the resulting Rao-Oestvall device would have performed various types of prioritizations regulating access to device resources by applications, such as those based on network packet transmission ("application-aware, client-specific prioritization of packet traffic" as Rao describes) and others based on the classification of an application (described in Oestvall). Given Oestvall's focus on battery conservation, Rao-Oestvall would have therefore enabled prioritization in a manner that conserves battery power. *Id*.

In the Rao-Oestvall device (below), a POSITA would have improved the agent 326 (red) to incorporate functionality associated with Oestvall's window server 2 (purple) and functionality associated with scheduler 3 (blue). SAMSUNG-1003, ¶67; SAMSUNG-1006, [0023]. Such a configuration would have enabled an improved agent to classify applications 338a-n (for which packet transmissions are prioritized) as an "trusted" or "untrusted" application. SAMSUNG-

1003, ¶67. The configuration would have also enabled the improved agent to prevent an untrusted application in the background from running or being given access to a service that consumes resources. *Id.*

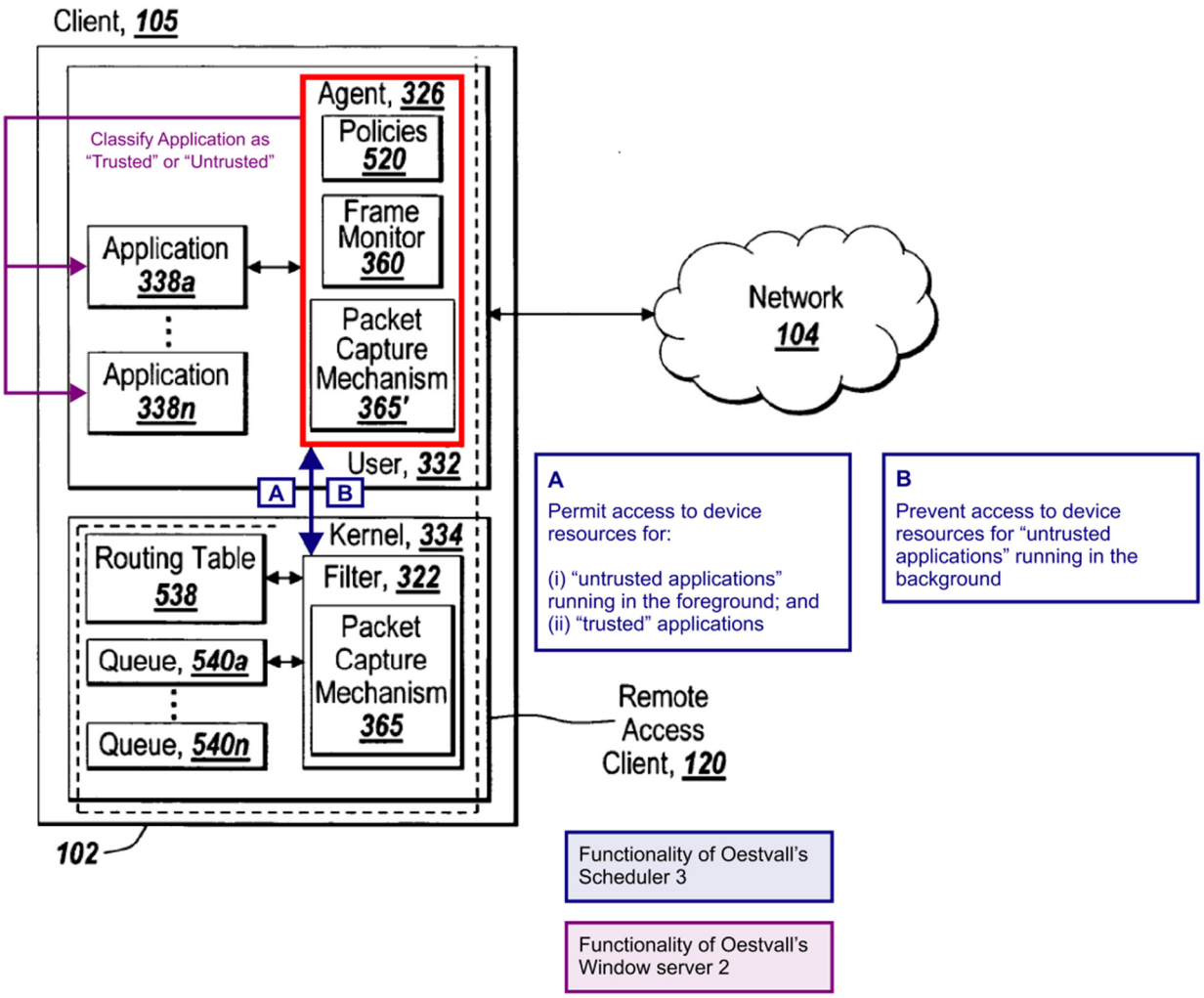

SAMSUNG-1005, Figure 5A[3] (Rao-Oestvall combination)

A POSITA would have found obvious that Rao-Oestvall enables policies that provide various types of prioritizations, consistent with Rao. SAMSUNG-

[3] Annotations to figures throughout are shown in color.

1005, [0182]; SAMSUNG-1003, ¶68. This would have improved the use of policies in certain network scenarios contemplated in Rao since policies can be used to prevent network packet transmissions of applications that would have otherwise contributed to additional power consumption. *Id*.

To implement this functionality, a POSITA would have modified Rao's policies 520 to include logic relating to a classification of an application. SAMSUNG-1003, ¶69. This modification is consistent with Rao, whose policies already "may be specified by" the name and/or type of application. SAMSUNG-1005, [0182]. Further, the policies "define prioritization based on whether an application is running in the foreground or the background." *Id.* Thus, a POSITA would have found it natural to implement the Rao-Oestvall device such that the policies used by the device indicate information for both packet-based and application-based prioritizations. SAMSUNG-1003, ¶69.

Finally, configuring Rao's client to leverage Oestvall's teachings would have required only routine programming knowledge well within the POSITA's skill. SAMSUNG-1003, ¶70. The change would have amounted to nothing more than the use of a known technique to improve similar devices—in each instance a smart phone equipped with software to regulate device activity based on monitoring user-device interactions—in a similar way, and combining prior art elements according to known methods to yield the predictable results described

above. *KSR v. Teleflex*, 550 U.S. 398, 417 (2007).

The elements of the resulting Rao-Oestvall system would each perform functions they had been known to perform prior to the combination—client 105 would perform the same functions to prioritize higher-priority messages over lower-priority messages through the use of policies 520, as taught in Rao, but would leverage functionality offered by Oestvall's window server 2 and scheduler 3 to identify the application's classification (trusted/untrusted) and interaction state (foreground/background). SAMSUNG-1003, ¶71. Accordingly, a POSITA would have naturally expected success when incorporating Oestvall's teachings into the Rao system. *Id.*

4. Montemurro

Montemurro describes "policy-based routing of communications among two or more modes of wireless communication." SAMSUNG-1007, [0001]. Devices with such connectivity capabilities are "dual or multi-mode devices," with "radio access technologies that provide access to multiple network types, including WLAN and WWAN. *Id.*, [0003]. But "[t]here are costs associated with application access from these different network[,]" and thus, "[i]t is therefore desirable to have a mechanism that seeks to optimize communications for multi-mode capable devices." *Id.*, [0004]; SAMSUNG-1003, ¶¶59-60.

Montemurro relies on policies to "configure connections and routes," which

is accomplished using a "rules engine" that "evaluates [the] policies on a status change (e.g., network availability, time of day, etc.) to configure a routing table." SAMSUNG-1007, [0011]. The rules engine and the routing table "provide[] an appropriate connection to an application for its respective communications." *Id.*; SAMSUNG-1003, ¶61. Figure 2 (below) shows "policy-based data routing for multi-mode operations of device 102 for communicating with network infrastructure." SAMSUNG-1007, [0024].

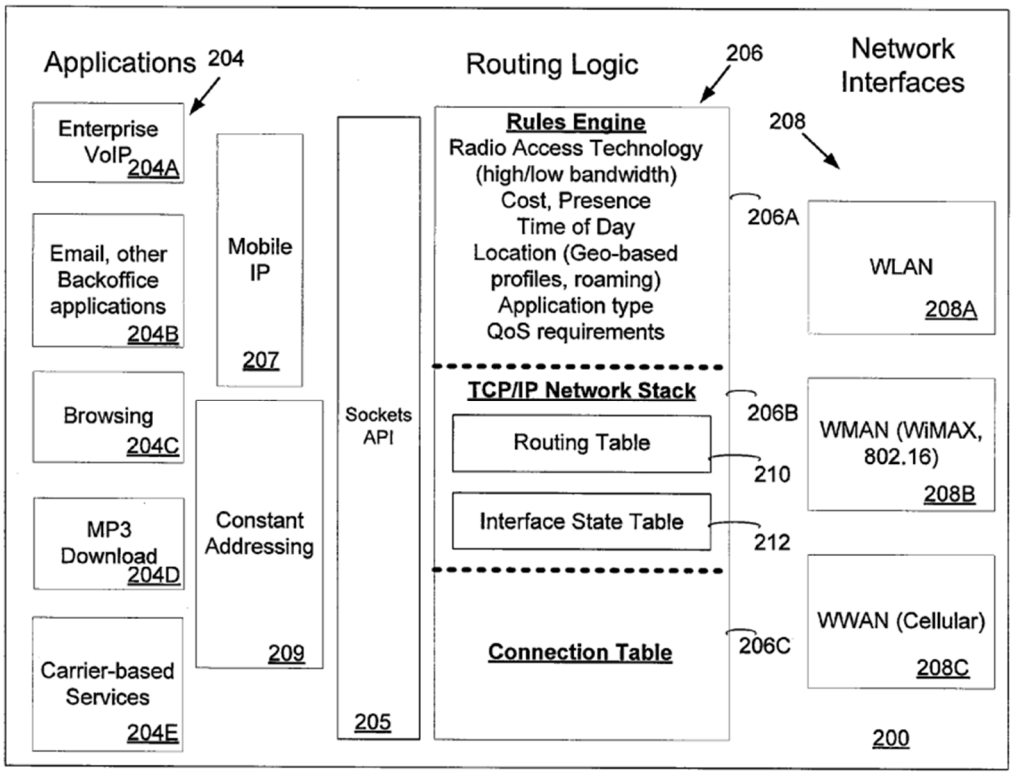

SAMSUNG-1007, Figure 2

Device 102 includes "a plurality of applications 204, routing logic 206, and

network interfaces 208." SAMSUNG-1007, [0025]. Routing logic 206 further includes rules engine 206A as a "policy-based mechanism using rules to configure TCP/IP network stack 206B and connection table 206C to coordinate communications for applications 204 using communications interfaces [208]." *Id.*, [0027]. For example, "a rule is a specific policy that is entered in the 'rules engine' for carrying out the policy." *Id.*; SAMSUNG-1003, ¶62.

Network interfaces 208 include "an interface for each of WLAN 208A, WMAN 208B and WWAN 208C network communications." SAMSUNG-1007, [0028]. Rules engine 206A "configures the communication operations with a set of rules/policies" for "various factors such as radio access technology (e.g., for high/low bandwidth properties), cost, presence, time of day, location (e.g., geo-based policies, network roaming), destination IP address, application type," etc. *Id.*, [0029]; SAMSUNG-1003, ¶63.

Further, rules engine 206A "configures (i.e. modifies, periodically in response to changes of state and the evaluation of its rules) connection table 207C and routing table 210 to optimize the flow of communications over multiple communications modes (e.g., interfaces 208 and respective networks 104 and 106)." SAMSUNG-1007, [0033]. On a state change, e.g., "time of day," "connecting/disconnecting of device 102 with a specific network 104 and 106," rules engine 206A executes and modifies "routing table 210 to ensure that data goes out to the most

appropriate network (via respective network interface 208)." *Id.*, [0035]. Rules engine 206A further "determine[s] which interface would be best to service a particular application." *Id.*; SAMSUNG-1003, ¶64.

5. Rao-Oestvall-Montemurro

As described in §III.A.3, a POSITA would have configured Rao-Oestvall to apply policies to prioritize packet transmission and application functionality to achieve several types of operational efficiencies. SAMSUNG-1005, [0179]-[0195], Figure 5A. In implementing this combination, a POSITA would have recognized opportunities to provide additional efficiencies in scenarios where the Rao-Oestvall device has access to multiple networks, motivating a POSITA to seek solutions beyond Rao and Oestvall to achieve such additional efficiencies. *Id.*; SAMSUNG-1003, ¶72.

Given Montemurro's broad focus to "optimize communications using a policy-based mechanism to configure connections and routes," a POSITA would have found Montemurro's teachings to be reasonably pertinent to the policies applied by Rao-Oestvall for prioritization. SAMSUNG-1003, ¶73. Indeed, like Oestvall, Montemurro describes embodiments where its policies are used to "disable or enable an application for a user." SAMSUNG-1007, [0027]. This would have led a POSITA to consider Montemurro's broader teachings in Figure 2 relating to "policy-based data routing for multimode operations." *Id.*, [0024]. Incorporation of

such teachings into Rao-Oestvall would have yielded several improvements described in Montemurro, such as the ability to "offer different usage models depending on the mode of wireless operation selected." *Id.*, [0003]. This configuration would have improved the Rao-Oestvall device by enabling prioritization to further account for several considerations, such as "bandwidth, range, cost, and power consumption." *Id.* Further, policies applied by the Rao-Oestvall-Montemurro device (or "Rao-Oestvall-Montemurro") would have been "responsive to various factors such as Radio Access Technology (high/low bandwidth), cost, presence, time of day, location, application type and quality of service (QoS) requirements among others to optimize communications," as Montemurro describes. *Id.*, [0011]; SAMSUNG-1003, ¶73.

A POSITA would have had a reasonable expectation of success in combining Rao-Oestvall and Montemurro. SAMSUNG-1003, ¶74. For example, Rao provides non-limiting disclosure of the types of networks to which device 102 may connect to using network interface 118. *Id.*; SAMSUNG-1005, [0095], [0125]. Montemurro's use of routing tables would have advanced Rao's motivation to enable multiple types of network connectivity. SAMSUNG-1007, [0024]; SAMSUNG-1003, ¶74. Additionally, both Rao and Montemurro expressly teach use of policies to regulate device functions (e.g., prioritizing network traffic in Rao, connecting to a suitable available network in Montemurro). SAMSUNG-

1005, [0182]; SAMSUNG-1007, [0011]. A POSITA would have understood these disclosures to both be generally focused on improving network performance on a mobile device, making the combination of their teachings a natural option to achieve the advantages discussed above. SAMSUNG-1003, ¶74. Additionally, configuring Rao-Oestvall to leverage Montemurro's teachings would have required only routine programming knowledge well within the skill of a POSITA prior to the earliest effective filing date. *Id.* The change would have involved (1) combining prior art elements according to known methods to yield predictable results; and (2) use of a known technique to improve similar devices (methods, or products) in the same way. *KSR*, 550 U.S. at 415-421; SAMSUNG-1003, ¶74. For example, Rao-Oestvall-Montemurro would have used a set of policies to generally regulate applications, including policies used to prioritize network packet transmissions (as Rao describes) and policies used to select the most suitable network connection (as Montemurro describes). SAMSUNG-1003, ¶74.

6. Analysis

[1pre]

To the extent the preamble is limiting, the Rao-Oestvall-Montemurro combination provides a ***wireless end-user device*** because Rao describes "multiple computing devices 102a-102c" (also referred to as "clients 105a-105c"), which connect to a network using one or more network connections. SAMSUNG-1005, [0086];

SAMSUNG-1003, ¶75. Client 105 can be "any type and/or form of computing device 102 that can run one or more applications 338," such as a "web browser, web-based client, client-server application, a thin-client computing client." SAMSUNG-1005, [0088]. Client 105 can also be a "mobile client." *Id.*, [0198].

[1a]

The Rao-Oestvall-Montemurro device would have included network connectivity features that Rao describes for device 102 (client 105), thereby rendering this limitation obvious. SAMSUNG-1003, ¶76. Rao describes a device including a "network interface 118 to interface to ... Wide Area Network (WAN) through a variety of connections," such as "LAN or WAN links," "wireless connections," or "some combination of any or all of the above." SAMSUNG-1005, [0095], [0125]. Rao's "network interface" includes "a built-in network adapter, network interface card, PCMCIA network card, card bus network adapter, USB network adapter, ***modem***, or any other device suitable for interfacing the computing device 102 to any type of network capable of communication…" *Id.* A POSITA would have therefore understood and found obvious to implement network interface 118 to enable multiple types of network connectivity such that network interface 118 includes, among others, a "***WWAN modem***" to permit Rao-Oestvall-Montemurro to communicate with network 104 as a WWAN for accessing services associated with a

remote access client ("***communicate data for Internet service activities***"). SAMSUNG-1003, ¶76; SAMSUNG-1005, [0172], [0198], [0090]. Further, network configurations for mobile devices that enabled WLAN and WWAN connectivity and techniques for alternating connectivity between such configurations were conventional by the Critical Date. SAMSUNG-1003, ¶77 (citing SAMSUNG-1007; SAMSUNG-1009).

Further, the Rao-Oestvall-Montemurro device is a "dual or multi-mode device[]" that is "capable of communicating in at least two network communication modes (e.g. WLAN such as Wi-Fi, WMAN such as WiMAX and WWAN such as GSM/GPRS cellular and wired modes (e.g. LAN, among others))," as taught by Montemurro. SAMSUNG-1007, [0003], [0011]. Therefore, a POSITA would have understood and found obvious that there would be a time when the Rao-Oestvall-Montemurro device is ***configured for and connected to WWAN***, and at that time, the device would use ***a WWAN modem to communicate data for Internet service activities between the device and WWAN***. SAMSUNG-1003, ¶78.

[1b]

The Rao-Oestvall-Montemurro combination provides [1b] for at least the same reasons as discussed in [1a]. SAMSUNG-1003, ¶79. For example, as discussed in [1a], Rao describes network connectivity features provided by network interface 118 enabling connections including LAN links, wireless connections, or a

combination. SAMSUNG-1005, [0095], [0125]. A POSITA would have therefore understood and found obvious to implement network interface 118 to enable multiple types of network connectivity such that network interface 118 includes, a "***WLAN modem***" to permit Rao-Oestvall to communicate with network 104 as a wireless LAN for accessing services associated with a remote access client. SAMSUNG-1003, ¶79; SAMSUNG-1005, [0172], [0198], [0090]. As explains in [1a], technology enabling WLAN/WWAN connectivity and alternating between the two was conventional by the Critical Date. SAMSUNG-1003, ¶79; SAMSUNG-1007, [0030]; SAMSUNG-1009, [0035], Figure 2.

As discussed in [1a], Montemurro's "dual or multi-mode device[]" is "capable of communicating in at least two network communication modes (e.g. WLAN such as Wi-Fi, WMAN such as WiMAX and WWAN such as GSM/GPRS cellular and wired modes (e.g. LAN, among others))." SAMSUNG-1007, [0003], [0011]. Therefore, a POSITA would have understood and found obvious that there would be a time when the Rao-Oestvall-Montemurro device is ***configured for and connected to WLAN***, and at that time, the device can use ***a WLAN modem to communicate data for Internet service activities between the device and WLAN***. SAMSUNG-1003, ¶80.

[1c]

The Rao-Oestvall-Montemurro device incorporates hardware elements of

Rao's device 102, including ***non-transitory memory*** for storing data relating to device functionality. SAMSUNG-1003, ¶81. For example, Rao's device 102 includes "main memory unit" "capable of storing data and allowing any storage location to be directly accessed by the microprocessor," and that can be implemented as various types of RAM, which was a well-known example of ***non-transitory memory***. SAMSUNG-1005, [0118]-[0120]; SAMSUNG-1003, ¶81. Similarly, Montemurro's mobile device 102 includes a "run-time store (e.g., RAM) 200" that stores policies. SAMSUNG-1007, [0025], [0027], [0029], Figure 2.

The Rao-Oestvall-Montemurro device would have had "one or more policies 520 for specifying client-side prioritization of network communications related to applications 338a-338n running on application," as taught by Rao. SAMSUNG-1005, [0182]-[0183], [0187], [0189], [0193]-[0194], [0207], [0108]-[0109]; SAMSUNG-1003, ¶82. Because Rao's policies are designed to prioritize, queue, and discard network packets, they offer different controls for different network traffic (network packets), thereby teaching ***a differential traffic control policy***. SAMSUNG-1003, ¶82.

Rao's policies may be accessible by, configured into, or loaded by the agent. SAMSUNG-1005, [0183]. Therefore, a POSITA would have understood and found obvious that the policies ("***differential traffic control policy***") would be stored in one or more memories in Rao's device, such as "main memory unit"

("***non-transitory memory***"). SAMSUNG-1003, ¶83.

Rao-Oestvall-Montemurro provides the ***differential traffic control policy*** is ***applicable to data communicated for Internet service activities***. SAMSUNG-1003, ¶84. As described in [1a]-[1b], in the Rao-Oestvall-Montemurro combination, the policies are designed for communication of data for ***Internet service activities*** with the network, which includes WWAN and WLAN. *Id.*; SAMSUNG-1005, [0090], [0125]; SAMSUNG-1007, [0003], [0011].

Additionally, Rao's device includes multiple "policies" each being specified for each application (or each network packet thereof) based on various criteria, such as "name of the application," "type of [the] application," "protocol" used by the application, "whether [the] application is running in the foreground or the background," and/or numerous other ways. SAMSUNG-1005, [0182], [0188]. A POSITA would have readily understood and found it obvious to configure Rao's policy to only cover an application with respect to its access to WWAN or network packets to be communicated via WWAN, while such a policy does not govern, or is indifferent to, the application's capability to access WLAN or its network packets being communicated via WLAN (thus, the same policy is not applicable to the network packets being communicated via WLAN). SAMSUNG-1003, ¶85.

Indeed, Montemurro contemplates such policies specific to data communi-

cated over different networks. SAMSUNG-1003, ¶86. For example, Montemurro's mobile device can selectively communicate in two network communication modes (e.g., WLAN and WWAN) based on "a set of rules/policies" specific for respective applications, and such rules/policies are based on "various factors such as Radio Access Technology [e.g., WLAN, WWAN, etc.], high/low bandwidth, cost, presence, time of day, location, application type and quality of service (QoS) requirements among others, to optimize communications. SAMSUNG-1007, [0011]-[0013], [0029], [0003]. Montemurro offers several "natural language example[s]" of the rules/policies, some of which is ***applicable to data communication via one network, but not applicable to data communication via another network***. *Id.*, [0029], [0025], [0004]; SAMSUNG-1003, ¶86. Such example rules/policies include:

- Example 1: "'the CRM application (i.e. one of 204B) only synchronizes the sales contact database (e.g. 120B) over a WLAN network 106'" (SAMSUNG-1007, [0029]);
- Example 2: "enterprise VoIP application 204A for voice over IP communications in an enterprise data network such as a LAN" (SAMSUNG-1007, [0025]; *see also* [0004]; and
- Example 3: "carrier-based services 204E such as SMS and voice communications over a carrier network" (SAMSUNG-1007, [0025]; *see also*

[0004].

A POSITA would have recognized that Example 3 is applicable to data communicated for WWAN service activities (e.g., SMS and voice communication), but not applicable to data communicated for WLAN service activities, while Examples 1 and 2 are applicable to data communicated for WLAN service activities (e.g., data synchronization and enterprise VoIP), but not applicable to data communicated for WWAN service activities. SAMSUNG-1003, ¶87.

Considering Montemurro, a POSITA would have recognized and found it obvious to consider a similar policy ("***differential traffic control policy***") that is applicable to data communication ***using the WWAN modem and the at least one WWAN, but not applicable to*** data communication ***using the WLAN modem and the at least one WLAN***. SAMSUNG-1003, ¶88. A POSITA would have been motivated to configure a policy for an application running at Rao-Oestvall-Montemurro's device for several known benefits. *Id.*; SAMSUNG-1007, [0003]-[0004]. As Montemurro recognizes, "dual or multi-mode devices" like the Rao-Oestvall-Montemurro device can run applications that "can have the ability to offer different usage models depending on the mode of wireless operation selected," and such "[s]election among the different radio access technologies may be driven by the different properties of the technologies such as bandwidth, range, cost, and power consumption, among other considerations." SAMSUNG-1007, [0003];

SAMSUNG-1003, ¶88.

Moreover, a POSITA would have found it obvious to configure policy use by the Rao-Oestvall-Montemurro device for device efficiency and cost-saving in scenarios where the device is outside a WLAN range and can only access WWAN for data communication. SAMSUNG-1003, ¶89. Indeed, WWAN was known as a radio access technology that consumes more processing and battery power than technologies like WLAN. *Id.*; SAMSUNG-1006, [0004] ("smartphones that consume high power levels by virtue of connecting to always-on GPRS or 3G cellular networks"). Montemurro also considers "[s]election among the different radio access technologies [e.g., WWAN, WLAN, etc.] may be driven by the different properties of the technologies such as bandwidth, range, ***cost***, and ***power consumption***, among other considerations." SAMSUNG-1007, [0003]. In fact, it was well-known that WWAN typically costed more than WLAN and thus was preferably used in limited situations or by user selection. SAMSUNG-1003, ¶89 (citing SAMSUNG-1012; SAMSUNG-1013). Thus, a POSITA would have been motivated to employ a policy applicable to data communication over WWAN but not over WLAN to achieve known benefits of efficient power and cost managements on a battery-operated mobile device. *Id.*

[1d]

Rao-Oestvall-Montemurro render [1d] obvious. SAMSUNG-1003, ¶¶90-

100.

"a user interface to allow a user to set one or more of a plurality of aspects of the differential traffic control policy to select one or more applications"

Rao states, "[t]he policies 520 may be configurable by a user by any suitable means and/or mechanism. For example, the agent 326 may provide a configuration mechanism such as ***a user interface***, graphical or otherwise, design and constructed for configuring or specifying the policies." SAMSUNG-1005, [0183]; SAMSUNG-1003, ¶91.

Rao-Oestvall-Montemurro's policy, as described in [1c], is configured to be applicable only to WWAN data communication, not to WLAN data communication. SAMSUNG-1003, ¶92. The policy would have had several user-configurable aspects, such as Rao's "protocol" or Montemurro's," ***application name***, ***application type***, whether an application is running in the foreground or the background, packet payload size, application size or memory usage, total execution time, frequency of use, network congestion or other conditions/statistics. *Id.*; SAMSUNG-1005, [0182], [0184], [0188]-[0189], [0193], [0195]; SAMSUNG-1007, [0011]-[0013], [0029]. For example, the Rao-Oestvall-Montemurro device's policy would be user configurable to ***select one or more applications*** (discussed below) by their application names and/or types, as Rao and Montemurro teach. SAMSUNG-1003, ¶92; SAMSUNG-1005, [0182]; SAMSUNG-1007, [0029].

Therefore, a POSITA would have understood and found obvious that the user interface of the Rao-Oestvall-Montemurro device would ***allow a user to set one or more of a plurality of aspects*** of its policy specific for WWAN data communication (***differential traffic control policy***, *see* [1c]). SAMSUNG-1003, ¶93; *see e.g.*, SAMSUNG-1013, Figure 3.

"when those applications are classified as interacting with a user in the device user interface foreground"

Rao's device classifies "whether an application is running in the foreground or the background of the client," thereby teaching certain applications being ***classified as interacting with a user in the device user interface foreground***. SAMSUNG-1005, [0182], [0184]-[0185], [0188]-[0189], [0193]-[0194]. In Rao-Oestvall-Montemurro, the device can offer "carrier-based services 204E such as SMS and voice communications over a carrier network." SAMSUNG-1007, [0025]; *see supra* [1c]. Here, a POSITA would have understood and found obvious that such "carrier-based services" could run in the foreground where a user interacts with the services via the device user interface (e.g., by typing or reading SMS's or by making or answering calls), and that the Rao-Oestvall-Montemurro device would ***classify*** those services ("***applications***") ***as interacting with a user in the device user interface foreground***. SAMSUNG-1003, ¶94. Similarly, Oestvall also describes that the device uses a "window server component 2 ... to determine if an application is in the background or foreground on display." SAMSUNG-

1006, [0008], [0016]-[0017], [0022]-[0023].

Notably, Rao offers broader disclosure of using policy 520 to enable application-aware prioritization, thereby suggesting to a POSITA that such policy 520 is applied "***when***" application 338 is classified as interacting with the user in the device user interface foreground. SAMSUNG-1003, ¶95. This is consistent with Rao's broader disclosures that policies "specify[] client-side prioritization of network communications related to applications" (SAMSUNG-1005, [0182]) and its motivation to address a scenario where "a network packet generated or received for an application running in the background [is] processed ahead of a network packet generated or received for the application running in the foreground" (*id.*, [0003]). Thus, a POSITA would have found obvious that the application of polices by the Rao-Oestvall-Montemurro device to prioritize network transmissions of an application given its interaction state to satisfy the temporal requirement between the use of a policy and classification of an interaction state of an application recited by this limitation. SAMSUNG-1003, ¶95.

"one or more applications that are only allowed to utilize the at least one WWAN for Internet service activities when those applications are classified as interacting with a user in the device user interface foreground"

Because Rao and Oestvall each disclose techniques for regulating activity of an application based on one or more classifications of the application, Rao-Oestvall-Montemurro renders obvious that applying a policy to prioritize network

transmissions of application 338 would result in "***Internet service activities***" being "***allowed***" or disallowed. SAMSUNG-1003, ¶96. For example, a POSITA would have understood and found obvious that the Rao-Oestvall-Montemurro device would have been configured to implement Rao's technique of intercepting network packets of an application based on the application's prioritization, and (i) where the application is classified as running in the foreground, network packets of that application would be stored in a queue ahead of other application(s) running in the background, and (ii) where the application is classified as running in the background, network packets of that application would be stored in a queue behind other application(s) running in the foreground. SAMSUNG-1005, [0038], [0046], [0102], [0182]-[0194]. In this scenario, interception of network packets of the application by the Rao-Oestvall-Montemurro device would have resulted in ***Internet service activities*** associated with intercepted network packets being ***allowed when*** the application is classified as running in the foreground ("***interacting with a user in the device user interface foreground***"), and resulted in Internet service activities associated with intercepted network packets being presently disallowed until the device is instead focused on handling "one or more network packets ahead of at least one network packet in the queue" associated with the application. *Id.*; SAMSUNG-1003, ¶96.

As another example, a POSITA would have understood and found obvious

that the Rao-Oestvall-Montemurro device would have been configured to implement Oestvall's techniques of preventing an untrusted application running in the background from "being given any services or consuming any resources" while allowing the foreground application to run and "provided with resources and services." SAMSUNG-1006, Abstract, [0008], [0010], [0015], [0023], [0025]. As discussed in §III.A.3, this would have been accomplished using an Oestvall-like scheduler in the Rao-Oestvall-Montemurro device based on a classification of application 338 and a determination by an Oestvall-like window server component that determines if the application is running in the foreground or background. SAMSUNG-1006, [0023]; SAMSUNG-1003, ¶97. Thus, where application 338 is an untrusted application presently in the background, the Oestvall-like scheduler would "prevent[] the [application] from running," e.g., "operate so as to never allocate any services or resources to the [application]." SAMSUNG-1006, [0023]. Because Internet network service activity is a type of service or resource service, the prevention of access to resources and services for the application by the Rao-Oestvall-Montemurro device would have resulted in the Internet network service activity associated with application 338 being ***allowed only when*** the application is running in the foreground. SAMSUNG-1003, ¶97.

Further, a POSITA would have recognized and found obvious that Rao and

Oestvall's techniques would be applied to communication via WWAN. SAMSUNG-1003, ¶98. For example, Rao describes that the device includes the "network interface" for connecting to various networks including WWAN and WLAN, and does not distinguish its techniques by networks. SAMSUNG-1005, [0125], [0095]. Similarly, Oestvall provides non-limiting reference to an application "being given ***any*** services or consuming ***any*** resources" to include network connectivity resources. SAMSUNG-1006, [0023]. Therefore, a POSITA would have found obvious that application of the policy in the above scenario to be pertinent to ***one or more applications that are only allowed to utilize the at least one WWAN for Internet service activities***. SAMSUNG-1003, ¶98.

To the extent that Rao and Oestvall are not express as to whether their techniques are applicable to WWAN, a POSITA would have modified the Rao-Oestvall device to be designed for data communication via WWAN, as described above. SAMSUNG-1003, ¶99. Again, Rao and Oestvall do not distinguish WWAN, WLAN, or any other network types in implementing its technique. *Id.*; SAMSUNG-1005, [0125]; SAMSUNG-1006, [0023].

Accordingly, a POSITA would have understood and found obvious that a certain policy ("***differential traffic control policy***") in the Rao-Oestvall-Montemurro device would be ***applicable only to data communicated over WWAN*** (*see*

[1c]), and one of more ***aspects*** of the policy are ***user-configurable*** via the ***user interface*** (as Rao teaches). SAMSUNG-1003, ¶100. Further, in the combination, the policy is configurable to ***select an application only allowed to utilize WWAN*** (e.g., where WLAN is not available) based on ***the classification that*** the application is running in the foreground where the user interacts with the application via the device user interface (e.g., interacting with the device user interface for SMS or cellular calls). *Id.*

[1e]

Rao-Oestvall-Montemurro renders obvious [1e]. SAMSUNG-1003, ¶101. For example, Rao's device 102 includes "central processing unit," which can be "any logic circuitry that responds to and processes instructions fetched from the main memory unit 104." SAMSUNG-1005, [0118]-[0119]; *see also* [0121] ("main processor"); *see also* SAMSUNG-1007, [0051], [0055], [0056] ("Microprocessor 638"); SAMSUNG-1003, ¶101.

Rao-Oestvall-Montemurro implements various APIs. SAMSUNG-1005, [0106], [0110], [0166], [0190], [0205]; SAMSUNG-1007, [0011], [0033], [0035], cls. 7, 13. It would have been well-known and obvious that such APIs are implemented by one or more processors. SAMSUNG-1003, ¶102.

Rao describes that its policies 520 may be accessible by, configured into, or loaded by the agent 326." SAMSUNG-1005, [0183], Figure 5A (below). Further,

referring to Figure 5A below, Rao's "agent 326 indicates the priority to the filter 322 for management of network packet queues 540a-540n to apply the indicated priorities." SAMSUNG-1005, [0190]. "The agent 326 may communicate the priority of network packets to the filter 322 by any suitable means and/or mechanism such as ***via an application programming interface (API)***, such an IOCTL interface, or any other type and/or form of interface known to those ordinarily skilled in the art." *Id.*; *see also*, [0106]; SAMSUNG-1003, ¶103 (citing SAMSUNG-1034).

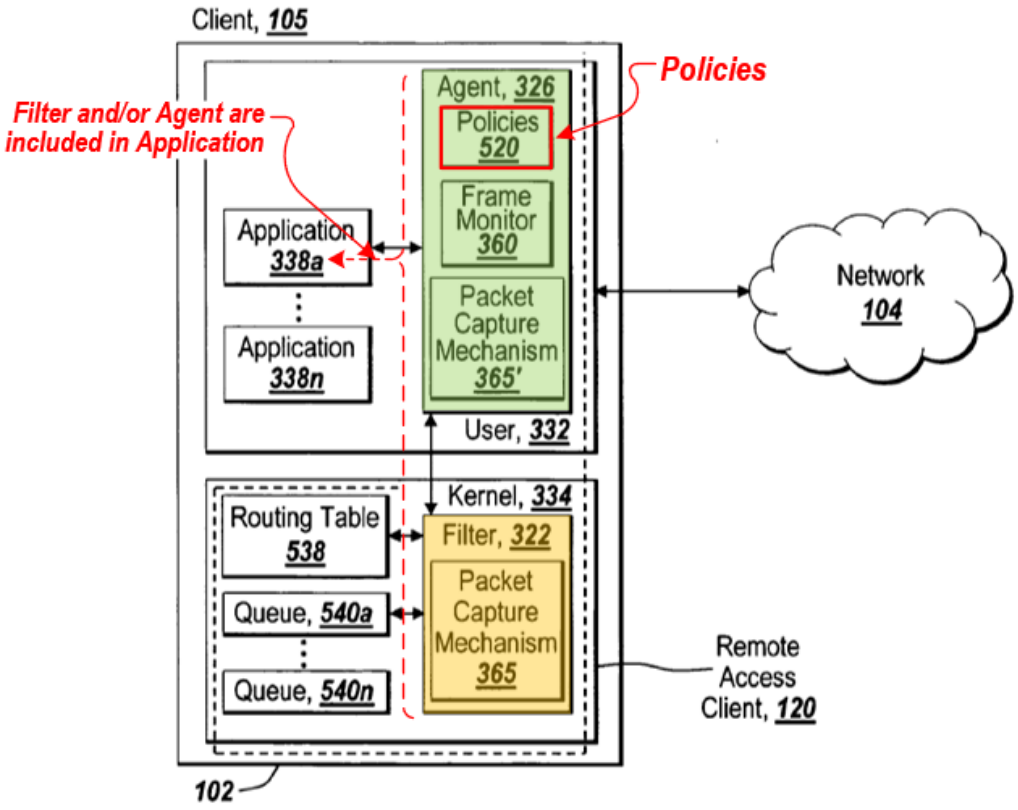

SAMSUNG-1005, Figure 5A

Rao describes that its "remote access client 120," which includes the agent 326 and/or the filter, "may be included within an application." SAMSUNG,

[0115]. A POSITA would have understood and found obvious that an application, which includes the remote access client 120 (including agent 326 and/or filter 322), would access the policies accessible by agent 326 through the API that enables communication between agent 326 and filter 322. SAMSUNG-1003, ¶104; SAMSUNG-1005, Figure 5A. In other words, the API allows application 338 to access one or more of policies 520 that are configured for that application. SAMSUNG-1003, ¶104.

Similarly, Oestvall incorporates by reference Dive-Reclus,[4] which teaches using APIs in accessing a network. SAMSUNG-1006, [0020]; SAMSUNG-1026, 16:23-17:28, 20:1-12; SAMSUNG-1003, ¶105.

Thus, based on Rao and Oestvall's disclosure of API usage, Rao-Oestvall's improved agent would have leveraged several types of APIs in regulating applications. SAMSUNG-1003, ¶106; SAMSUNG-1005, [0110], [0166]. For example,

---

[4] Oestvall incorporates by reference Dive-Reclus (as PCT/GB2003/002311), which published as International Publication No. WO 03/100581 (SAMSUNG-1026). SAMSUNG-1006, [0020]. Therefore, Dive-Reclus is "effectively part of [Oestvall] as if [it] were explicitly contained therein." *Arbutus Biopharma Corp. v. ModernaTX*, 65 F.4th 656, 662-63 (Fed. Cir. 2023)(internal quotations and citation omitted).

Rao contemplates using an IOCTL API for interfacing with device drivers (SAMSUNG-1005, [0106], [0190]) and a hooking API for intercepting and/or hooking network traffic of applications (*id.*, [0166]). Rao also describes leveraging any suitable "means" or "mechanism" to implement functionality relating to prioritization (interception). SAMSUNG-1005, [0106]. Likewise, Dive-Reclus[5] teaches permissions regulating network access by a third-party application that uses an API call; POSITA would have found obvious that a permission decision (grant/deny) is communicated to the third-party application through a corresponding API. SAMSUNG-1026, 16:23-17:28, 20:1-12. Thus, a POSITA would have understood and found obvious that Rao-Oestvall-Montemurro's improved agent leverages APIs including those Rao and Oestvall describes, and conventional APIs known by the Critical Date, to support application operations in mobile devices. SAMSUNG-1003, ¶106.

One example is Java sockets API through which an application communicates data over a network. SAMSUNG-1020, 149-50. Rao describes that its device can run the Java operating system, and thus, a POSITA would have understood and found obvious that in some implementations of the Rao-Oestvall-Montemurro device, applications running on the device would access the network using Java sockets API. *Id.*; SAMSUNG-1005, [0088], [0128]. For example, when a

[5] *Id.*

network access condition is used to prevent an application from accessing the network, a POSITA would have understood and found obvious that the application would have received an indication, via the Java sockets API, of the network access condition. SAMSUNG-1003, ¶107 (citing SAMSUNG-1034).

A POSITA would have found it obvious to use well-known APIs to provide communications to applications in Rao-Oestvall. SAMSUNG-1003, ¶108 (citing SAMSUNG-1016; SAMSUNG-1019).

Moreover, Montemurro describes that "communications for applications 204 are performed ... using a socket-based application programming interface (API) 206 for communications." SAMSUNG-1007, [0033]. As illustrated in Figure 2 below, the socket-based API 206 is arranged between the applications 204 and the rules engine 206A, and Montemurro describes that "the application 'delegates' communication details (set-up and tear down, etc. and management) to the socket." *Id.* In addition, Montemurro describes that "[r]ules engine 206A also interacts with the connection API's to determine which interface would be best used to serve a particular application." *Id.*, [0035]. Moreover, "the instructions define a communication API for handling communications on behalf of applications, said communication API routing said communications in accordance with the routing table and connection table," where the instructions are stored in memory and executed by a processor. *Id.*, cls. 7, 1. Therefore, a POSITA would have understood

and found obvious that Montemurro's API (e.g., socket-based API 206), implemented by the processor, operates to allow a particular application 204 to access "various factors" of one of "a set of rules/policies" ("***differential traffic control policy***") in the rules engine 206A, which is applicable to that particular application. SAMSUNG-1003, ¶109.

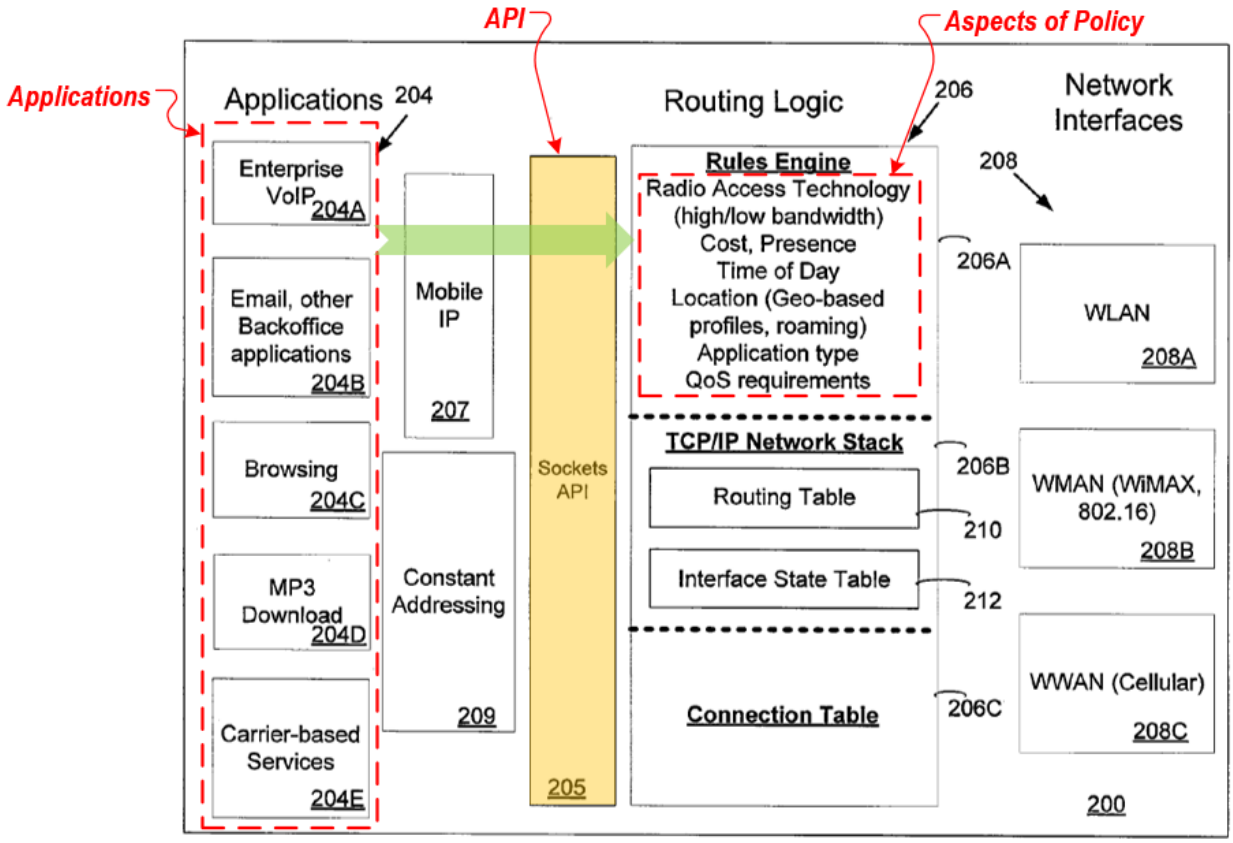

SAMSUNG-1007, Figure 2

As described in [1d], in the Rao-Oestvall-Montemurro combination, the aspects of a policy applicable to a particular application is user-settable and can relate to ***whether the particular application is only allowed to utilize the at least one WWAN for Internet service activities when the particular application is classified***

as interacting with a user in the device user interface foreground. SAMSUNG-1003, ¶110; *see supra* [1d].

[2]

Rao-Oestvall-Montemurro renders obvious "***the one or more processors further configured to implement a network stack agent to apply the differential traffic control policy to Internet data service provided using the WWAN modem and the at least one WWAN***." SAMSUNG-1003, ¶111. Rao's device (also referred to as "client") includes a "***network stack***" for communicating network packets. SAMSUNG-1005, [0021], [0034]-[0038], [0043]-[0057], [0100]-[0104], [0152]-[0166], [0171]-[0177], [0185], [0196]-[0216]. Further, Rao's device includes "an ***agent*** for determining the one or more network packets is associated with a first application of the client, and indicating to the network driver a priority of the one or more network packets." *Id.*, [0043]. A POSITA would have understood and found obvious that the processor(s) in Rao's device includes an agent implemented or associated with the network stack ("***network stack agent***"). SAMSUNG-1003, ¶111; SAMSUNG-1005, [0053]. A POSITA would also have found obvious that Rao's "central processing unit" ***implements the network stack agent***. SAMSUNG-1003, ¶111.

Further, as discussed in [1c], Rao-Oestvall-Montemurro's improved agent

applies the differential traffic control policy to Internet data service provided using the WWAN modem and the at least one WWAN. SAMSUNG-1003, ¶112; SAMSUNG-1005, [0183].

Moreover, as discussed in [1d], Rao-Oestvall-Montemurro's device would provide one or more aspects of the differential traffic control policy that are user-settable. SAMSUNG-1003, ¶113. As discussed in [1d], Rao-Oestvall-Montemurro renders obvious that applying such user-settable aspect(s) of the policy would result in blocking ***an Internet service access request associated with at least one application that is not classified as interacting with a user in the device interface foreground***. *Id.* For example, a POSITA would have understood and found obvious that Rao-Oestvall-Montemurro would have been configured to implement Rao's technique of intercepting network packets of an application based on the application's prioritization, and where the application is classified as running in the background, network packets of that application would be stored in a queue behind other application(s) running in the foreground. SAMSUNG-1005, [0038], [0046], [0102], [0182]-[0194]. In this scenario, interception of network packets of the application by Rao-Oestvall-Montemurro would have resulted in an ***Internet service access request*** associated with intercepted network packets being presently ***blocked*** until and so long as the device is instead focused on handling "one or more network packets ahead of at least one network packet in the queue"

associated with the application. *Id.*; SAMSUNG-1003, ¶113.

As another example, a POSITA would have understood and found obvious that Rao-Oestvall-Montemurro would have been configured to implement Oestvall's techniques of preventing an untrusted application running in the background from "being given any services or consuming any resources." SAMSUNG-1006, Abstract, [0008], [0010], [0015], [0023], [0025]. As discussed in §III.A.3, this would have been accomplished using an Oestvall-like scheduler in Rao-Oestvall-Montemurro based on a classification of application 338 and a determination by an Oestvall-like window server component that determines if the application is running in the foreground or background. SAMSUNG-1006, [0023]; SAMSUNG-1003, ¶114. Thus, where application 338 is an untrusted application presently in the background, the Oestvall-like scheduler would "prevent[] the [application 338] from running," e.g., "operate so as to never allocate any services or resources to the [application 338]." SAMSUNG-1006, [0023].

[3]

See [1d]-[1e]. SAMSUNG-1003, ¶¶115-124.

As discussed in §III.A.3, a POSITA would have configured Rao-Oestvall-Montemurro to perform prioritizations, such as those based on network packet transmission (described in Rao) and/or based on the classification of an application (described in Oestvall). SAMSUNG-1003, ¶116; SAMSUNG-1005, [0003],

[0004], [0182], [0188]; SAMSUNG-1006, [0002], [0023]. As discussed in [1d] and further below, Rao-Oestvall-Montemurro would have enabled a configuration that regulates an application's access to system resources (e.g., resources for accessing a network), rendering the requirements of this limitation obvious. SAMSUNG-1003, ¶116.

Rao-Oestvall-Montemurro includes an improved version of Rao's agent 326 that regulates applications by applying a policy. For example, in Oestvall, an applied policy specifies a condition that "prevents [an] untrusted application 4 from running," including accessing device network resources ("***one or more network access conditions***"). SAMSUNG-1006, [0023]. Because this condition impacts normal operation of the application, a POSITA would have understood and found obvious that Rao-Oestvall-Montemurro provides an indication to the application. SAMSUNG-1003, ¶117. For example, Rao's Figure 5A (below) shows a bi-directional arrow (red), indicating that agent 326 provides communications to applications 338a-n. *Id.* Agent 326 includes packet capture mechanism 365, which "use[s] any hooking application programming interface (API) to intercept, hook, or otherwise ***obtain inbound and/or outbound packets of the client 105, such as the network traffic associated with application 338***." SAMSUNG-1005, [0110].

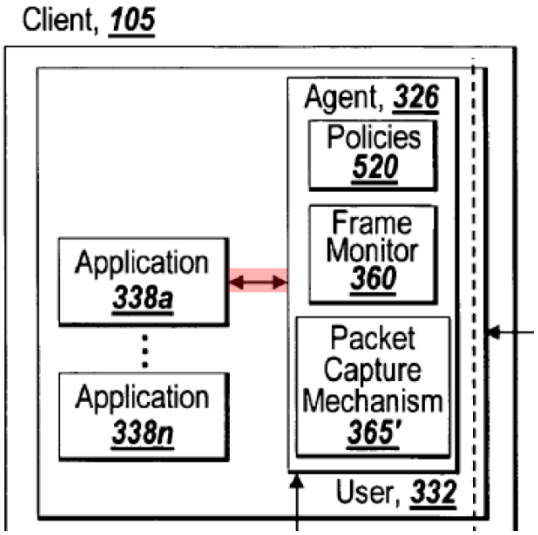

SAMSUNG-1005, Figure 5A (partial)

Oestvall similarly contemplates that a policy decision is communicated to an application, since the application "***maybe requested*** (but not prevented) to stop running if in background." SAMSUNG-1006, [0015], [0023]. When Rao-Oestvall-Montemurro prevents an application running in the background from accessing device resources (including device network resources), a POSITA would have found obvious that the application receives an indication relating to the prevention ("***indicate … one or more network access conditions***"). *Id.*, [0023]; SAMSUNG-1003, ¶118 (citing SAMSUNG-1034).

A POSITA would have also found it obvious to implement policy evaluation in Rao-Oestvall-Montemurro using one of several well-known techniques that provide indications to applications relating to policy evaluation. SAMSUNG-1003, ¶119. As one example, in Araujo (SAMSUNG-1011), "if [a] power state change is

not allowable under [a] policy," the device can "block the request" and "notif[y] [the program] that the request will not be processed." SAMSUNG-1011, [0038], [0040]-[0041]; SAMSUNG-1018, 15:44-55. As another example, Dive-Reclus[6] teaches using permissions to regulate API calls (grant/deny) made by applications in accessing a network. SAMSUNG-1026, 16:23-17:28, 20:1-12. In this example, a POSITA would have found obvious that a permission decision for an API call by an application (grant/deny) involves providing an indication to the application regarding the decision. SAMSUNG-1003, ¶119.

Again, Rao-Oestvall-Montemurro's improved agent regulates applications by applying a policy that specifies a condition that, for example, an untrusted application cannot access device resources when running in the background. SAMSUNG-1003, ¶120. Consistent with Oestvall, regulation using the policy is accomplished using a "control signal" that "in effect prevents [an] untrusted application 4 from running, e.g., being given any services or consuming any resources." *Id.*: SAMSUNG-1006, [0023]. This involves a change in application operation; a POSITA would have understood and found it obvious to provide an indication of this change to the application. SAMSUNG-1003, ¶120. Thus, a POSITA would have found obvious that Rao-Oestvall-Montemurro's use of "control signal" to prevent an application from accessing the network would involve the device

[6] *Id.*

providing an indication to the application that the network access request has been rejected ("***indicate, to the particular application, one or more network access conditions based on the differential traffic control policy***"). SAMSUNG-1003, ¶120.

Further, as discussed in [1e], Rao-Oestvall-Montemurro's improved agent would have leveraged APIs in regulating applications in the device, such as ***indicating network access conditions to applications***. SAMSUNG-1003, ¶121.

As discussed above, the Rao-Oestvall-Montemurro device would perform various types of prioritizations, such as those based on network packet transmission (described in Rao) and others based on the classification of an application (described in Oestvall). SAMSUNG-1003, ¶122. A POSITA would have found obvious that, in a first scenario involving Rao-Oestvall-Montemurro, an application is classified as an untrusted application and is presently running as a background process. *Id.* In this scenario, Rao-Oestvall-Montemurro would have applied a policy that in effect prevents the application from obtaining access to device resources (including network resources). *Id.* Since applying the policy results in a change in application operation, the policy includes a condition that prevents the application from accessing device resources ("***unavailability to the particular application of an Internet data service***") running in the background. *Id.* Further, a POSITA would have understood Oestvall's non-limiting reference to an application "being

given ***any*** services or consuming ***any*** resources" to include network connectivity resources, and thus, found obvious that application of the policy in the first scenario to be pertinent to ***Internet data service available via the WWAN modem***. SAMSUNG-1006, [0023]; SAMSUNG-1003, ¶122.

Meanwhile, a POSITA would have found obvious that, in a second scenario involving Rao-Oestvall-Montemurro, an application is classified as an untrusted application and is presently running as a foreground process. SAMSUNG-1003, ¶123. In this scenario, Rao-Oestvall-Montemurro would have applied a policy that permits the application to access device resources (including network resources). *Id.* Since applying the policy results in a change in application operation, the policy includes another condition ("***network access condition***") that permits the application to access device resources ("***available to a different application***") when running in the foreground. *Id.* Further, a POSITA would have found obvious that application of the policy in the second scenario to be similarly pertinent to ***Internet data service available via the WWAN modem***. SAMSUNG-1006, [0023]; SAMSUNG-1003, ¶123.

Thus, a POSITA would have found obvious that Rao-Oestvall-Montemurro's policy includes ***a network access condition that indicates the unavailability to the particular application*** (e.g., first scenario) ***of an Internet data service that is currently available via the WWAN modem to a different application*** (e.g.,

second scenario). SAMSUNG-1003, ¶124.

[4]

As discussed for [1d]-[1e], Rao-Oestvall-Montemurro would have incorporated functionality to detect whether an application is presently running in the foreground ("***classify that the particular application is interacting with the user in the device user interface foreground***"). SAMSUNG-1003, ¶125; SAMSUNG-1005, [0182], [0188], [0189]. Because Rao's policies "define prioritization based on whether an application is running in the foreground or the background of the client 105[,]" Rao's disclosure relies on the capability to detect when an application is not in the foreground. SAMSUNG-1005, [0182], [0188], [0189]. Rao attributes an application "in the foreground" as one being "currently in active use by the user," which would have led a POSITA to recognize that a background application is one being not currently in active use by the user ("***when a user of the device is directly interacting with the particular application or perceiving any benefit from the particular application***"). SAMSUNG-1005, [0003]; SAMSUNG-1003, ¶125.

Oestvall offers similar disclosure regarding regulating application operation based on an application running in the foreground or the background. SAMSUNG-1006, [0021]-[0023]. Further, a POSITA would have found obvious that differentiated use of "foreground" and "background" in both Rao and Oestvall indicates example applications in the foreground are those where the user is directly

interacting with the application through a user interface. SAMSUNG-1003, ¶126. Indeed, techniques for adapting the prioritization for an application or otherwise impacts its operation based on the application's direct user interaction were well-known by the Critical Date. *Id.*, ¶¶127-128 (citing SAMSUNG-1015; SAMSUNG-1010).

A POSITA would have understood and found obvious that, when the Rao-Oestvall-Montemurro device classifies that "an application is running in the foreground ... of the client 105," this classification would be performed based on the current state of the application (e.g., at the time that the packet was generated and intercepted by the Rao-Oestvall-Montemurro system, such that the network packet is accurately prioritized). SAMSUNG-1003, ¶129. Specifically, this classification would be performed ***when a user of the device is directly interacting with that application*** (e.g., by engaging in "active use" of the application) and/or is ***perceiving any benefit from that application*** (e.g., by viewing the application as it is running in the foreground and/or perceiving that the application is ready for input by the user). SAMSUNG-1005, [0003]; SAMSUNG-1003, ¶129.

[5]

As described in [1e], Rao-Oestvall-Montemurro's processor(s) ***classify that the particular application is interacting with the user in the device user interface foreground***. SAMSUNG-1003, ¶130.

As described in §III.A.3 & 5, Rao-Oestvall-Montemurro would have applied policies based on an application's present interaction state (foreground/background). A POSITA would have understood and found obvious that the present interaction state represents an example of a "***state of user interface priority***" as it indicates whether the application is prioritized for display on a mobile device. SAMSUNG-1003, ¶131. Further, it would have been obvious that the priority states of applications relative to each other in a user interface ("***state of user interface priority for the application***") are associated with, or represent, present interaction states of the applications (foreground/background). *Id.*; SAMSUNG-1027, 6:31-49.

Oestvall explains, "[i]n conventional multi-tasking computers running several different applications at the same time, an application will issue a software interrupt to the operating system," and "interrupts from different applications are prioritised and queued by an interrupt handler." SAMSUNG-1006, [0005]. Oestvall also teaches prioritization based on "trust" classification of an application, which would have obviously been another example of a "***state of user interface priority***." *Id.*, [0015]; SAMSUNG-1003, ¶132.

Similarly, Rao's policies "define prioritization based on whether an application is running in the foreground or the background of the client 105," and thus, a POSITA would have found obvious that applying a policy involves a classification

based on a user interface priority. SAMSUNG-1005, [0182]; SAMSUNG-1003, ¶133. A POSITA would have found obvious that Rao-Oestvall-Montemurro applies policies to perform application-related prioritization based on the various examples of present interaction states described in Rao and Oestvall ("***classify whether or not the first end-user application***" is "***interacting in the device display foreground with a user***"). SAMSUNG-1003, ¶133. For example, a foreground application is one that is "currently in active use by the user," which a POSITA would have understood and found obvious indicates a user interface priority in that the application is prioritized over other applications that are running in the background. SAMSUNG-1005, [0182]; SAMSUNG-1003, ¶133. Use of states of user interface priority in coordinating application operation was well-known before the Critical Date and a POSITA would have found it obvious to use states of user interface priority for classification in Rao-Oestvall-Montemurro. SAMSUNG-1003, ¶¶134-136 (citing SAMSUNG-1015; SAMSUNG-1024; SAMSUNG-1025)).

[6]

As discussed in [1d]-[1e], Rao-Oestvall-Montemurro classifies "whether an application is running in the foreground or the background of the client 105," as taught by Rao. SAMSUNG-1005, [0182], [0188]-[0189]; SAMSUNG-1003, ¶137.

Further, as discussed in [1d]-[1e], Rao contemplates that applications running in the background performs Internet service activities, such as by generating

network packets while running in the background ("***providing or utilizing a background data service***"). SAMSUNG-1003, ¶138. For example, a POSITA would have understood and found obvious that Rao's email application uses a background data service of the device (e.g., a network stack of the device) in order to poll an email server for updates and/or retrieve emails in the background. *Id.*; SAMSUNG-1005, [0003], [0090].

Oestvall's device uses a "window server component ... to determine if an application is in the background or foreground on display." SAMSUNG-1006, [0008], [0016]-[0017], [0022]-[0023]; SAMSUNG-1003, ¶139. In Rao-Oestvall-Montemurro, a POSITA would have understood and found obvious that the device performs this classification upon an application requesting access to an Internet service. SAMSUNG-1003, ¶139.

As discussed in [1d], Oestvall's application can perform network activities and consume "resources" when in the background ("***providing or utilizing a background data service***"). SAMSUNG-1006, [0023]-[0024]; SAMSUNG-1003, ¶140.

A POSITA would have understood and found obvious that, when the Rao-Oestvall-Montemurro device classifies that "an application is running in... the background of the client 105," this classification would be performed based on the current state of the application (e.g., at the time that the packet was generated and

intercepted by the Rao-Oestvall-Montemurro device). SAMSUNG-1003, ¶141. Specifically, this classification would be performed ***when the application is providing or utilizing a background data service*** (e.g., by generating network packets in the background, as Rao teaches, or by performing network activities and/or consuming resources when in the background, as Oestvall teaches). SAMSUNG-1005, [0003], [0090]; SAMSUNG-1006, [0023]-[0024]; SAMSUNG-1003, ¶141 (citing SAMSUNG-1010).

[7]

Rao-Oestvall-Montemurro would have incorporated functionality to output a user interface relating to various aspects of policies used for prioritization. SAMSUNG-1003, ¶142. Rao's "agent 326 may provide a configuration mechanism such as a user interface, graphical or otherwise, design and constructed for configuring or specifying the policies." SAMSUNG-1005, [0183]. Thus, a POSITA would have found it obvious to configure the agent in the Rao-Oestvall-Montemurro device to similarly provide ***a user interface to provide information*** regarding various aspects of applying of policies for prioritization, which would include ***information regarding why the differential traffic control policy is applied to the particular application***. SAMSUNG-1003, ¶142 (citing SAMSUNG-1034). Moreover, Dive-Reclus[7] teaches blocking an "unsigned" application and provides

[7] *Id.*

an interface requesting a user to confirm whether the application should be blocked. SAMSUNG-1026, 19:17-25, Figure 2. SAMSUNG-1003, ¶143. User interfaces for providing information regarding policy evaluation were well-known by the Critical Date. SAMSUNG-1003, ¶¶144-146 (citing SAMSUNG-1010); SAMSUNG-1007, [0030]; *see also*, SAMSUNG-1009, [0116].

[8]

Rao-Oestvall-Montemurro would have incorporated Montemurro's functionality to apply a rules engine to coordinate connectivity for applications. SAMSUNG-1007, [0027]; SAMSUNG-1003, ¶147; §III.A.5.

For example, a rules engine would have applied an instance of a routing table ("***multimode profile***") with information for multiple networks available for selection. SAMSUNG-1007, [0030]. "[I]f both the WLAN and WWAN radios…of [a] device [] are connected to their respective networks 104 and 106, there will be a route associated with each network 104 and 106…" *Id.* The rules engine "executes" the instance of the routing table "to ensure that data goes out to the most appropriate network" and to "determine which interface would be best used to service a particular application." *Id.*, [0035]; SAMSUNG-1003, ¶148.

Where multiple networks are available for selection, a POSITA would have understood and found obvious that the information specified by the instance of the routing table includes policies for each available network. SAMSUNG-1003,

¶149. In Montemurro, policies are "responsive to various factors." SAMSUNG-1007, [0011], [0024], [0027], [0029]. Thus, a POSITA would have understood and found obvious that an instance of the routing table with information for multiple network available for selection includes "***different policies for different networks***." *Id.*; SAMSUNG-1003, ¶149. Use of different policies for enabling capabilities for different networks (e.g., phone network, local network) was conventional by the Critical Date. SAMSUNG-1003, ¶150 (citing SAMSUNG-1026). For example, Dive-Reclus[8] includes a table (below) showing different permission decisions for applications submitting API calls to request network access.

Installed	PhoneNetwork	ReadUserData	WriteUserData	LocalNetwork	Certificate
Good.exe	Not granted	Granted	Not granted	Granted	Checked OK – click to view root signing cert
Bad.exe	Not granted	Not granted	Not granted	Not granted	Unsigned

SAMSUNG-1026, 20

[9]

As described for [8], a POSITA would have understood and found obvious that information specified by an instance of the routing table ("***multimode profile***")

[8] *Id.*

includes "***different policies for different networks***." SAMSUNG-1007, [0011], [0024], [0027], [0029]; SAMSUNG-1003, ¶151. The rules engine "executes" the routing table "to ensure that data goes out to the most appropriate network" and to "determine which interface would be best used to service a particular application." SAMSUNG-1007, [0035]. For example, "if both the WLAN and WWAN radios…of [a] device [] ***are connected*** to their respective networks 104 and 106, there will be a route associated with each network 104 and 106…" *Id.*, [0030]. In this example, a POSITA would have understood and found obvious that Rao-Oestvall-Montemurro's rules engine would have executed the instance of the routing table ("***select a traffic control policy from the multimode profile***") based on the type of network connections of wireless radios (WLAN, WWAN), and thus, when a routing option is selected from the routing table instance, the selection ("***select a traffic control policy***") is based on the types of current network connections of the device ("***type of network connection currently in use by the device***"). SAMSUNG-1003, ¶151. Moreover, Dive-Reclus[9] teaches permission decisions regulating network access by third-party applications using API calls. SAMSUNG-1026, 16:23-17:28, 20:1-12; SAMSUNG-1003, ¶152.

Additionally, Montemurro describes a "time-based rule and/or a location-based rule" that determines where the device is located at a given time and which

[9] *Id.*

network is available in that location at the time and then changes the traffic route depending on the determination. SAMSUNG-1007, [0039]. Therefore, Montemurro's policies are based on the ***network currently*** available or ***currently in use by the device***. SAMSUNG-1003, ¶153.

[10]

As discussed in [9], Montemurro describes "if both the WLAN and WWAN radios…of [a] device [] are connected to their respective networks 104 and 106, there will be a route associated with each network 104 and 106…" SAMSUNG-1007, [0030]. In this example, a POSITA would have understood and found obvious that the rules engine within Rao-Oestvall-Montemurro would have executed the routing table ("***select a traffic control policy from the multimode profile***") when the device is connected to a WLAN connection ("***when the type of network connection is at least one type of WLAN connection***"). SAMSUNG-1003, ¶154.

Further, Montemurro references "local LAN" and a POSITA would have understood and found obvious that the "local LAN" is a type of "***network connection from the WLAN to the Internet***." SAMSUNG-1003, ¶155; SAMSUNG-1007, [0039]; SAMSUNG-1009, [0032]. It would have been obvious that Rao-Oestvall-Montemurro enables connectivity to several types of network connections implemented by network components in the combination (e.g., base station, WLAN components, access points, etc.) between the WLAN and the Internet such that the

device considers a "***type of WLAN connection***" in "***selecting a traffic control policy from the multimode profile***." SAMSUNG-1003, ¶156 (citing SAMSUNG-1007).

[11]

As described for [8]-[10], Rao-Oestvall-Montemurro's rules engine applies an instance of a routing table ("***multimode profile***") with information for multiple networks available for selection. SAMSUNG-1007, [0011], [0024], [0027], [0029]; SAMSUNG-1003, ¶157. For example, "if both the WLAN and WWAN radios…are connected to their respective networks 104 and 106, there will be a route associated with each network 104 and 106," as shown in the table below. SAMSUNG-1007, [0030].

Source IP	Destination IP	Device Interface (208)
192.168.1.20	0.0.0.0	WLAN (208A)
67.69.20.142	0.0.0.0	WWAN (208C)

In Montemurro, a device "has mobile IP capabilities" to "permit the device to attach to the Internet (IP network) via a home and one or more foreign networks." SAMSUNG-1007, [0037]. Because Montemurro contemplates devices with capabilities to connect to both home and foreign networks, a POSITA would

have found obvious that the routing table was similarly configured to provide routing options for various networks. SAMSUNG-1003, ¶158. Because Montemurro's device is operable on various networks (including WWAN), a POSITA would have understood and found obvious that the routing table was similarly configured to provide routing options based on the respective policies (e.g., "***differential traffic control policy***" ([1c]) and "***second traffic control policy***") for WWAN for a home network ("***home WWAN***") and WWAN for roaming to a foreign network ("***roaming WWAN***"). SAMSUNG-1003, ¶158; SAMSUNG-1007, [0030], [0037]. Indeed, by the Critical Date, WWAN was well-known for being implemented for different settings, such as home and roaming WWANs. SAMSUNG-1003, ¶158. Montemurro further offers non-limiting example WWANs, e.g., "cellular technologies like GSM/GPRS EDGE, UTMS, HSPA, CDMA, WCDMA, etc.," which would have obviously included roaming and home WWAN networks. SAMSUNG-1007, [0002]; SAMSUNG-1003, ¶158. A POSITA would have perceived different policies (e.g., "***differential traffic control policy***" ([1c]) and "***second traffic control policy***") for Rao-Oestvall-Montemurro's network selection to provide different characteristics of connection to several available WWAN networks (e.g., "***roaming WWAN network***" and "***home WWAN network***") for known benefits of reducing costs and complexity, consistent with Montemurro. SAM-

SUNG-1007, [0029]-[0038]; SAMSUNG-1003, ¶158. It was well-known and obvious by the Critical Date to provide different policies for selective connection to home and roaming networks ("***home WWAN***" and "***roaming WWAN***"). SAMSUNG-1003, ¶¶158-159 (citing SAMSUNG-1022; SAMSUNG-1023).

[12]

As discussed for [1e], Rao-Oestvall-Montemurro's improved agent would have leveraged several types of APIs in regulating applications. SAMSUNG-1005, [0110], [0166], [0190], [0205]; SAMSUNG-1003, ¶160. Rao's agent is part of a "network stack" with "network layers," including "applications 338a-338n," "gateway 340," "peer computing device," and "remote access client 120." SAMSUNG-1005, [0185]. For example, "stacks 310a and 310b" "represent network stacks of computing devices 102a-120b or gateway 340." *Id.*, [0196]. Thus, a POSITA would have understood and found obvious that Rao-Oestvall-Montemurro's improved agent (element of Rao's Figure 5A environment) is part of the network stacks, as Rao describes. Further, because the improved agent leverages one or more of the APIs described in Rao, a POSITA would have understood and found obvious that a network stack including the agent 326 is "***in communication with***" the API. SAMSUNG-1003, ¶160; SAMSUNG-1005, [0106], [0166], [0190], [0203].

In Rao, "[an] application hooking is implemented via an application programming interface (API)," so that "the hooking of network packets occurs at the network layer of the network stack 310a-310n." SAMSUNG-1005, [0166]. Rao discusses a network architecture of a "network stack." *Id.*, [0100]. Indeed, network configurations similar to those described in Rao in which an API is "***in communication with***" a networking stack were conventional by the Critical Date. SAMSUNG-1003, ¶¶161-162 (citing SAMSUNG-1021; SAMSUNG-1005).

[13]

As described for [12], Rao-Oestvall-Montemurro would have been configured to operate within one of Rao's network stacks. SAMSUNG-1005, [0185], [0190], [0196], Figure 3A; SAMSUNG-1003, ¶163. The network stacks include an "application layer" that, for example, allows applications to establish "an application level session." SAMSUNG-1005, [0203], [0100], [0133], [0198]; SAMSUNG-1003, ¶163.

A POSITA would have understood and found obvious that packet interception, as provided by Rao-Oestvall-Montemurro, involves identifying data traffic generated by applications because a processor identifies a packet for determining that the identified packet should be intercepted. SAMSUNG-1003, ¶164. Rao describes several examples of packet intercepting techniques, each of which would

involve identifying packets (examples of application traffic flows). *Id.*; SAMSUNG-1005, [0110]-[0111], [0137], [0143], [0158].

A POSITA would have also found obvious that the Rao-Oestvall-Montemurro device is configured to "***identify application traffic flows prior to flows entering the network stack***" through Rao's disclosure of a filter process 322 intercepting a network packet "before [the packet] reaches the network stack 310a-310b." SAMSUNG-1005, [0166]; SAMSUNG-1003, ¶165. Further, a POSITA would have understood and found obvious that, based on the architectures disclosed in Rao (e.g., Figures 3A, 6A), packet interception (and packet identification) occurs at the "application layer," which sits at a general network layer architecture. SAMSUNG-1003, ¶165.

[14]

As discussed for [1e], Rao-Oestvall-Montemurro's improved agent would have leveraged several types of APIs (including the recited "***API***") in regulating applications. SAMSUNG-1005, [0110], [0166], [0190], [0205]; SAMSUNG-1003, ¶166. Rao use a "hooking application programming interface (API) to intercept, hook, or otherwise obtain inbound and/or outbound packets of the client 105, such as the network traffic associated with application 338." SAMSUNG-1005, [0110]. A POSITA would have understood and found obvious that the APIs leveraged by Rao-Oestvall-Montemurro's improved agent includes "***network access***

API." SAMSUNG-1003, ¶166. Further, Dive-Reclus[10] teaches using permissions to regulate API calls (granting/denying) made by applications in accessing a network. SAMSUNG-1026, 16:23-17:28, 20:1-12. Indeed, this aligns '578 Patent's disclosure that "network access API" is "used to implement traffic control for network capacity controlled services." SAMSUNG-1001, 94:14-39.

[15]

As discussed in [11], Rao-Oestvall-Montemurro's rules engine applies an instance of a routing table with information ("***access information***") for multiple networks available for selection. SAMSUNG-1007, [0011], [0024], [0027], [0029]; SAMSUNG-1003, ¶167. As discussed for [11], Montemurro offers non-limiting example WWANs, which would have obviously included roaming and home WWAN networks ("***roaming network***" and "***non-roaming network***"). SAMSUNG-1003, ¶167; SAMSUNG-1007, [0003]. Notably, policies are "responsive to various factors," including "network roaming." SAMSUNG-1007, [0029].

Further, the rules engine "executes" the routing table to "ensure that data goes out to the most appropriate network (via respective network interface)" and "interacts with the connection API's to determine which interface would be best used to service a particular application." SAMSUNG-1007, [0035]. With these teachings, a POSITA would have understood and found obvious that an instance of

[10] *Id.*

the routing table includes "***information on whether a connected WWAN is a roaming network or a non-roaming network***," and that ***the API allows the particular application to access such information***. SAMSUNG-1003, ¶168 (citing SAMSUNG-1007).

[16]

As discussed for [1e], Rao-Oestvall-Montemurro's improved agent would have leveraged several types of APIs (including the recited "***API***") in regulating applications. SAMSUNG-1005, [0110], [0166], [0190], [0205]; SAMSUNG-1003, ¶169. A POSITA would have understood and found obvious that APIs leveraged by Rao-Oestvall-Montemurro's improved agent includes those described in Rao and Oestvall, as well as conventional APIs known by the Critical Date, such as Java sockets API. SAMSUNG-1003, ¶169; SAMSUNG-1020, 149-50. When a network access condition is used to permit an application to access network resources, a POSITA would have understood and found obvious that the Java sockets API provides an indication to the application of the network access condition ("***the API informs the particular application when it is allowed to access Internet data service that is currently available via the WWAN modem***"). SAMSUNG-1003, ¶169 (citing SAMSUNG-1034). This aligns Oestvall's disclosure that "[w]hen the untrusted application is brought to the foreground again, it is allowed to run again."

SAMSUNG-1006, [0021]. As another example, Dive-Reclus[11] teaches using permissions to regulate API calls (granting/blocking) made by applications in accessing a network, and a POSITA would have found obvious that granting/blocking permission for an API call by an application involves informing the application when it is allowed to access a network service available via the network modem. SAMSUNG-1003, ¶169; SAMSUNG-1026, 16:23-17:28, 20:1-12.

[17]

As discussed for [1e], Rao-Oestvall-Montemurro's improved agent would have leveraged several types of APIs (including the recited "***API***") in regulating applications. SAMSUNG-1005, [0110], [0166], [0190], [0205]. Further, a POSITA would have understood and found obvious that APIs leveraged by the improved agent includes those described in Rao and Oestvall, as well as conventional APIs known by the Critical Date, such as Java sockets API. SAMSUNG-1003, ¶170; SAMSUNG-1020, 149-50. When a network access condition is used to permit an application to access network resources, a POSITA would have understood and found obvious that the Java sockets API provides instructions (e.g., opening connections, sending/receiving data, and closing connections) to the application relating to the network access condition, thereby controlling the application's access to network resources ("***wherein the API***

[11] *Id.*

informs the particular application of one or more network traffic controls that the application is expected to implement"). SAMSUNG-1003, ¶171.

In Oestvall, when an application running in the background requests network access, the application is denied access to system resources (including network access resources), which results in the application being information of one or more network traffic controls that the application is expected to implement. SAMSUNG-1006, [0023]. Dive-Reclus[12] teaches permission decisions regulating network access by third-party applications that use API calls. SAMSUNG-1026, 16:23-17:28, 20:1-12; SAMSUNG-1003, ¶172. A POSITA would have found obvious that a permission decision is an example of "***one or more network traffic controls***" that controls network access, which is communicated to the application through a corresponding API ("***API informs the particular application of one or more network traffic controls***"). SAMSUNG-1003, ¶173.

[18]

As discussed for [1e] and [17], Rao-Oestvall-Montemurro's improved agent would have leveraged several types of APIs (including the recited "***API***") in regulating applications. SAMSUNG-1005, [0110], [0166], [0190], [0205]; SAMSUNG-1020, 149-50; SAMSUNG-1003, ¶174. Dive-Reclus[13] teaches

[12] *Id.*
[13] *Id.*

permission decisions regulating network access by third-party applications using API calls. SAMSUNG-1026, 16:23-17:28, 20:1-12. A POSITA would have found obvious that a permission decision denying network access results in "***transition to a different state***" (e.g., permitted or restricted network access), which is communicated to the application through a corresponding API ("***API instructs particular application***"). SAMSUNG-1026, 16:23-17:28, 20:1-12; SAMSUNG-1003, ¶174.

Montemurro's "applications can be developed and operated to provide different usage models that may vary depending on the mode of operation that is available at runtime." SAMSUNG-1007, [0024]; SAMSUNG-1003, ¶¶175-176. The rules engine "configures the communication operations with a set of rules/policies that could include various factors." SAMSUNG-1007, [0029]; SAMSUNG-1003, ¶¶175-176.

Montemurro also provides techniques that cause an application to transition to a different state, e.g., "[s]ome access technology switches will result in IP address changes" so "an application using the connection needs to be aware of the IP address, the change may not be transparent and may need to be communicated to (or otherwise discoverable by) the application." SAMSUNG-1007, [0048]. In another example, connection "differences are significant (e.g. between GSM/GPRS and WAN 802.11 technologies)" so "an application may need to tailor its

behaviour to account for the new access technology in use" such as "[b]uffer sizes, re-transmission timers etc." that "may need to be changed." *Id.* A POSITA would have understood and found obvious that scenarios where an application tailors its behavior (e.g., IP address changes, altered buffer sizes, and modified re-transmission timers) are examples of application transitions to different states. SAMSUNG-1003, ¶177.

Thus, when an application state changes such that a network access condition adjusts the application's permission to access network resources, a POSITA would have understood and found obvious that, in Rao-Oestvall-Montemurro, an API provides instructions to the application to transition states relating to the network access condition ("***the API instructs the particular application to transition to a different state***"). SAMSUNG-1003, ¶¶177-178 (citing SAMSUNG-1020; SAMSUNG-1001).

[19]

As described in §III.A.5, a POSITA would have configured Rao-Oestvall-Montemurro to apply policies based on an application's present interaction state. SAMSUNG-1003, ¶179. For example, Oestvall describes preventing an untrusted application from "being given any services or consuming any resources" based on the application being "in the background or foreground on display." SAMSUNG-1006, [0023]. A POSITA would have found obvious that a present interaction

state of an application (foreground/background) represents an example "***application behavior***" because an application's present interaction state indicates whether the application is currently made available for display on a mobile device. SAMSUNG-1003, ¶179. This aligns '578 Patent's disclosure of "application behavior" of an application, such as "conference meeting services, video streaming, content update, software update," and "running in the background and continuing to consume potentially." SAMSUNG-1001, 8:23-31; SAMSUNG-1003, ¶180. Further, Oestvall's untrusted application is deemed in the background if "the display shows a screen saver or is actually turned off." SAMSUNG-1006, [0024]. Likewise, Rao's application is in the foreground if it is "currently in active use by the user." SAMSUNG-1005, [0003]. Further, the Rao-Oestvall-Montemurro device would have been configured to apply a policy to perform application-related prioritization based on the application's present interaction state ("***configured to associate the particular application with the differential traffic control policy based on an application behavior***"). SAMSUNG-1003, ¶181.

[20]

Rao-Oestvall-Montemurro renders [20] obvious. SAMSUNG-1003, ¶182. Rao's device have "a network stack 310, which may comprise one or more network layers, such as any networks layers of the Open Systems Interconnection

(OSI) communications model as those skilled in the art will recognize and appreciate," and Rao's filter 322 "include[s] a packet capturing mechanism," which "comprise[s] a network driver, such as a network driver operating at any layer, or portion thereof, of a network stack 310 of the client 105." SAMSUNG-1005, [0100]-[0101]. Thus, a POSITA would have recognized that Rao's filter 322 comprises a network stack having a network interface ("***network stack interface***"). SAMSUNG-1003, ¶182.

A POSITA would have found obvious that Rao-Oestvall-Montemurro's filter intercepts ***network socket interface messages for applications and OS functions***. SAMSUNG-1003, ¶183. For example, Rao's filter "intercepts all outbound packets of the client 105 for inspection" including "packets generated by an application 338 executing in user-mode 332 for transmission by the client 105." SAMSUNG-1005, [0105]. A POSITA would have found obvious that a network socket interface message is used to transmit a packet, and thus intercepting a packet involves intercepting a network socket interface message. SAMSUNG-1003, ¶¶183-184 (citing SAMSUNG-1034).

As discussed for [1e], a POSITA would have found obvious that Rao's filter 322 is implemented with the API, such as that between Rao's agent 322 and kernel 334, as illustrated below. SAMSUNG-1003, ¶185.

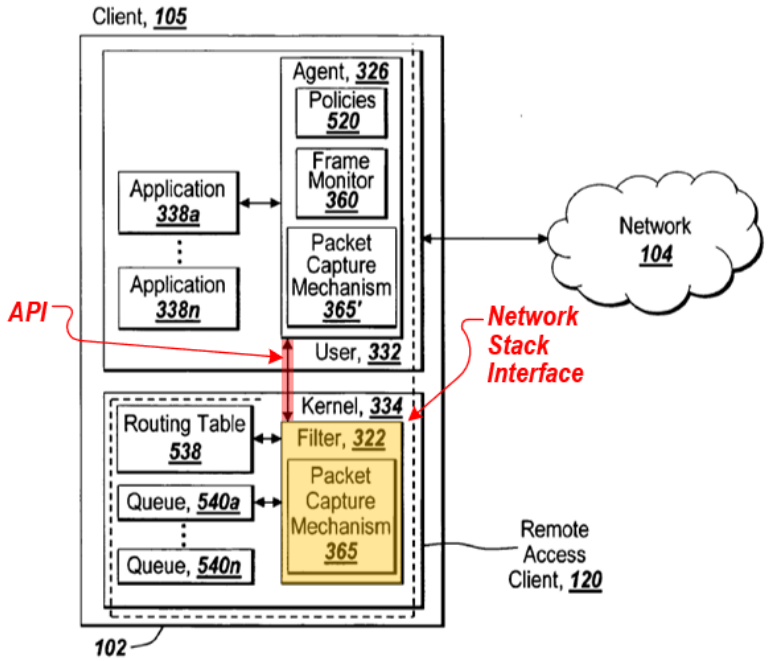

SAMSUNG-1005, Figure 5A

Lastly, as discussed in [1e], Rao-Oestvall-Montemurro's processors are configured to implement the API that allows an application to access the aspects of the differential traffic control policy applicable to that application. SAMSUNG-1003, ¶186. Similarly, as discussed in [2], Rao-Oestvall-Montemurro's processors are configured to implement a network stack agent to apply the differential traffic control policy to Internet data service provided using the WWAN modem and the at least one WWAN. *Id.* Thus, a POSITA would have found obvious that the processor(s) in Rao-Oestvall-Montemurro's device ***applies the differential traffic control policy to the intercepted network socket interface messages*** that transmit the packets as taught in Rao. *Id.*

[21]

As discussed in §III.A.5, policies applied by Rao-Oestvall-Montemurro ("***differential traffic control policy***") would have been "responsive to various factors such as Radio Access Technology (high/low bandwidth), cost, presence, time of day, location, application type and quality of service (QoS) requirements among others to optimize communications," as Montemurro describes. SAMSUNG-1007, [0011]; SAMSUNG-1003, ¶187.

In Montemurro, "network infrastructure" provides support for services provided to a wireless device. SAMSUNG-1007, [0014]. Examples of "network infrastructure" include "a gateway server, a provisioning server, a discovery, and an application repository," each of which are examples of a "***network element***." SAMSUNG-1003, ¶188. Services provided by the network infrastructure include "Administrative and Management Service dealing with policies, such as those specifying allowed applications for users, services available to applications and more." SAMSUNG-1007, [0015]-[0016]. Moreover, Rao's remote access client 120 "receive[s] an indication of network congestion" and thereby "controls and manages the prioritization of network communications," which would adjust policy evaluation by the device. SAMSUNG-1005, [0195]. Therefore, a POSITA would have found obvious that, as an example service provided by Montemurro's

network infrastructure, a server ("***network element***") provides an update for a service dealing with policies, and accordingly the Rao-Oestvall-Montemurro device would have been configured to update policies relating to application operation ("***update the differential traffic control policy***") based on the update from the server ("***information received from [the] network element***"). SAMSUNG-1003, ¶188. The update can specify a new allowed application, and Rao-Oestvall-Montemurro would have updated policies to reference a name of the new allowed application and thereby permit regulation of the newly allowed application, consistent with Rao. *Id.*; SAMSUNG-1005, [0182]. Moreover, techniques for adapting policy configurations based on information received from network elements were conventional by the Critical Date. SAMSUNG-1003, ¶¶189-190 (citing SAMSUNG-1010; SAMSUNG-1001).

[22]

As discussed in [1d]-[1e] and [2], Rao-Oestvall-Montemurro's processor(s) are ***configured to apply the differential traffic control policy to selectively block access by the particular application***. SAMSUNG-1003, ¶191.

Further, Rao's device includes "network stack 310" having "one or more protocols, such as the TCP/IP protocol over Ethernet or a wireless protocol, such as IEEE 802.11," and further having "one or more network drivers supporting the one or more layers, such as a TCP driver or a network layer driver." SAMSUNG-

1005, [0100], Figure 1C. Rao's network packets can be communicated "via a secure socket layer." *Id.*, [0035]; SAMSUNG-1003, ¶192.

Rao's device "intercept[s] network packets of one or more applications 338a-338n transparently to the application 338a-338n, the gateway 340, a peer computing device, ***and any of the network layers of a network stack***." SAMSUNG-1005, [0185]. Rao's blocking technique beneficially allows the prioritization technique to "support any type of application 338a-338n on the client 105." SAMSUNG-1005, [0185]; SAMSUNG-1003, ¶193.

Therefore, a POSITA would have found obvious that Rao-Oestvall-Montemurro enables applications to transmit network packets to a remote server on the Internet by transmitting requests to a network stack. SAMSUNG-1003, ¶194. A POSITA would have found obvious that such requests include requests to the network stack to open a socket (e.g., using "secure socket layer"), connect to the socket, and/or write data to the socket (***"open, connect, and/or write requests by the particular application to a network stack"***). *Id.* (citing SAMSUNG-1034; SAMSUNG-1035). In view of Rao, a POSITA would have found it obvious to selectively block such requests to the network stack ("***selectively block network access by the particular application by intercepting open, connect, and/or write requests by the particular application to a network stack")***, as performing such an

operation would allow Rao's prioritization technique to "support any type of application" on a device, as taught by Rao. SAMSUNG-1003, ¶194 (citing SAMSUNG-1005); *see supra* [12].

IV. PTAB DISCRETION SHOULD NOT PRECLUDE INSTITUTION

A. 35 U.S.C. §325(d)

Discretionary denial under the Board's §325(d) *Advanced Bionics* analysis is not warranted. IPR2019-01469, Paper 6, 8-9 (PTAB Feb. 13, 2020) (precedential) ("*Advanced Bionics"*).

None of the prior art references advanced in this Petition was previously before the Office. While a relative of Rao (PCT application WO 2006/012610A2 ("Rao-2")) was cited on the face of the '578 Patent, there is no evidence that the Office substantively considered these references among the references listed on the first 12 pages of the '578 Patent. *See, generally*, SAMSUNG-1002. Moreover, the same or substantially the same arguments previously were not presented to the Office. *Id.* Indeed, there could be no overlap between the arguments made before the Office because the Examiner issued no prior art rejections during prosecution.

To the extent it is argued that the same or substantially the same art or arguments were previously presented to the Office, the second prong is not met. *Advanced Bionics*, 8-10. The Examiner issued no prior art rejections and included no substantive discussion of any prior art reference. *See, generally*, SAMSUNG-

1002. Therefore, although Rao-2 was cited on the face of the '578 Patent, neither Rao/Rao-2 nor the obviousness of the Challenged Claims in view of those references was ever addressed during prosecution. As highlighted in Ground 1, the Examiner clearly not appreciate Rao and how Rao in combination with other prior art not previously before the Office (Oestvall, Montemurro) render the Challenged Claims obvious. Moreover, Petitioner has shown a reasonable likelihood that it would prevail that at least one of the Challenged Claims is unpatentable over the applied art based on the current record. *Supra* §III.A; PGR2022-00010, Paper 9, 8-9 (PTAB June 6, 2022). Therefore, Petitioner has demonstrated material error by the Office, and discretionary denial is not warranted.

B. 35 U.S.C. §314(a)

In *Apple Inc. v. Fintiv, Inc.*, the Board enumerated six factors to determine whether a petition should be discretionarily denied institution under §314(a). IPR2020-00019, Paper 11 at 2-3 (PTAB Mar. 20, 2020)(precedential)("*Fintiv*"). In June 2022, the USPTO issued updated discretionary denial guidance in view of the *Fintiv* factors, indicating that ***the PTAB will not discretionarily deny institution if Petitioner presents a Sotera stipulation.*** SAMSUNG-1031, 3, 7-8. Here, Samsung has eliminated any risk of duplicated effort by voluntarily presenting a *Sotera* stipulation to Headwater. SAMSUNG-1032; IPR2020-0109, Paper 12 (PTAB Dec. 1, 2020). For at least this reason, the Board should not discretionarily

deny this petition.

Although the Board need not address additional *Fintiv* considerations in light of Samsung's *Sotera* stipulation, the *Fintiv* factors do not favor denial.

Factor 1 is neutral because neither party has requested a stay in co-pending litigation.

Factor 2 is neutral because the Court's trial date is speculative and subject to change. The Board will likely issue its Final Written Decision around February 2025, approximately six months after the scheduled trial date (8/5/2024). SAMSUNG-1030, 1. However, the Board and Director have recognized that "scheduled trial dates are unreliable and often change." SAMSUNG-1031, 8.

Factor 3 favors institution because Petitioner has diligently filed this Petition ahead of the one-year time bar, while the EDTX litigation is in its early stages. Beyond exchanging preliminary infringement/invalidity contentions, the parties and the District Court have yet to expend significant resources on invalidity. SAMSUNG-1030, 5.

Factor 4 favors institution because Petitioner has provided a *Sotera* stipulation. SAMSUNG-1032.

Factor 5: The parties in the parallel EDTX litigation are the same.

Factor 6 favors institution because the merits of this Petition are compelling.

V. CONCLUSION AND FEES

The Challenged Claims are unpatentable. Petitioner authorizes charge of fees to Deposit Account 06-1050.

VI. MANDATORY NOTICES UNDER 37 C.F.R § 42.8(a)(1)

A. Real Party-In-Interest Under 37 C.F.R. § 42.8(b)(1)

Samsung Electronics Co., Ltd. and Samsung Electronics America, Inc. (collectively, "Samsung") are the real parties-in-interest.

B. Related Matters Under 37 C.F.R. § 42.8(b)(2)

The '578 Patent is the subject of a civil action, *Headwater Research LLC v. Samsung Electronics Co., Ltd. et al.*, 2:22-cv-00422, E.D. Tex., filed October 26, 2022 (SAMSUNG-1004; SAMSUNG-1033). Samsung and Headwater are also involved in case nos. 2:22-cv-00467 and 2:23-cv-00103, also in E.D. Tex.

Samsung is not aware of any other disclaimers, reexamination certificates, or IPR petitions addressing the '578 Patent.

C. Lead And Back-Up Counsel Under 37 C.F.R. § 42.8(b)(3)

Petitioner provides the following designation of counsel.

Lead Counsel	Backup counsel
W. Karl Renner, Reg. No. 41,265 Fish & Richardson P.C. 60 South Sixth Street, Suite 3200 Minneapolis, MN 55402 Tel: 202-783-5070 Fax: 877-769-7945 Email:IPR39843-0157IP1@fr.com	Jeremy J. Monaldo, Reg. No. 58,680 Jennifer J. Huang, Reg. No. 64,297 Sangki Park, Reg. No. 77,261 60 South Sixth Street, Suite 3200 Minneapolis, MN 55402 Tel: 202-783-5070 Fax: 877-769-7945 PTABInbound@fr.com

D. Service Information

Please address all correspondence and service to the address listed above. Petitioner consents to electronic service by email at IPR39843-0157IP1@fr.com (referencing No. 39843-0157IP1 and cc'ing PTABInbound@fr.com, axf-ptab@fr.com, jjm@fr.com, jjh@fr.com, and spark@fr.com).

Respectfully submitted,

Dated August 25, 2023

/Jennifer J. Huang/

W. Karl Renner, Reg. No. 41,265
Jeremy J. Monaldo, Reg. No. 58,680
Jennifer J. Huang, Reg. No. 64,297
Sangki Park, Reg. No. 77,261
Fish & Richardson P.C.
60 South Sixth Street, Suite 3200
Minneapolis, MN 55402
T: 202-783-5070
F: 877-769-7945

(Control No. IPR2023-01337)

Attorneys for Petitioner

CERTIFICATION UNDER 37 CFR § 42.24

Under the provisions of 37 CFR § 42.24(d), the undersigned hereby certifies that the word count for the foregoing Petition for *Inter Partes* Review totals 13,954 words, which is less than the 14,000 allowed under 37 CFR § 42.24.

Dated August 25, 2023

/Jennifer J. Huang/

W. Karl Renner, Reg. No. 41,265
Jeremy J. Monaldo, Reg. No. 58,680
Jennifer J. Huang, Reg. No. 64,297
Sangki Park, Reg. No. 77,261
Fish & Richardson P.C.
60 South Sixth Street, Suite 3200
Minneapolis, MN 55402
T: 202-783-5070
F: 877-769-7945

Attorneys for Petitioner

CERTIFICATE OF SERVICE

Pursuant to 37 CFR §§ 42.6(e)(4)(i) *et seq.* and 42.105(b), the undersigned certifies that on August 25, 2023, a complete and entire copy of this Petition for *Inter Partes* Review and all supporting exhibits were provided via Federal Express, to the Patent Owner, by serving the correspondence address of record as follows:

Headwater Research LLC
C/O Farjami & Farjami LLP
26522 La Alameda Ave., Suite 360
Mission Viejo, CA 92691

/Diana Bradley/

Diana Bradley
Fish & Richardson P.C.
60 South Sixth Street, Suite 3200
Minneapolis, MN 55402
(858) 678-5667