US005913040A

United States Patent [19]

Rakavy et al.

[11] **Patent Number: 5,913,040**

[45] **Date of Patent: Jun. 15, 1999**

[54] **METHOD AND APPARATUS FOR TRANSMITTING AND DISPLAYING INFORMATION BETWEEN A REMOTE NETWORK AND A LOCAL COMPUTER**

[75] Inventors: **Yuval Rakavy**; **Eli Barkat**, both of Jerusalem, Israel

[73] Assignee: **Backweb Ltd.**, Jerusalem, Israel

[21] Appl. No.: **08/517,666**

[22] Filed: **Aug. 22, 1995**

[51] **Int. Cl.**[6] **G06F 13/00**

[52] **U.S. Cl.** **395/200.62**; 395/200.47; 395/200.54; 370/229

[58] **Field of Search** 395/200.01, 200.07, 395/200.11, 200.13, 200.3, 200.47, 200.54, 200.62, 200.65; 370/229, 230, 232, 235, 234; 348/10, 522

[56] **References Cited**

U.S. PATENT DOCUMENTS

4,719,567	1/1988	Whittington et al.	364/DIG. 1
4,799,146	1/1989	Chauvel .	
5,099,420	3/1992	Baxlow et al.	395/299
5,105,184	4/1992	Pirani et al. .	
5,165,012	11/1992	Crandall et al. .	
5,220,564	6/1993	Tuch et al.	370/94.1
5,283,639	2/1994	Each et al. .	
5,285,442	2/1994	Iwamura et al.	370/234
5,305,195	4/1994	Murphy .	
5,313,455	5/1994	van der Wal et al.	370/232
5,319,455	6/1994	Hoarty et al. .	
5,321,740	6/1994	Gregorek et al. .	
5,347,632	9/1994	Filepp et al. .	
5,355,501	10/1994	Gross et al. .	
5,361,091	11/1994	Hoarty et al. .	
5,390,172	2/1995	Kuang .	
5,412,416	5/1995	Nemirofsky .	
5,455,826	10/1995	Ozveren et al.	370/232
5,488,609	1/1996	Hluchyj et al.	370/84
5,504,744	4/1996	Adams et al.	370/232
5,555,377	9/1996	Christensen et al.	395/200.11
5,600,364	2/1997	Hendricks et al.	348/1
5,604,542	2/1997	Dedrick	348/552
5,675,742	10/1997	Jain et al.	395/200.56

OTHER PUBLICATIONS

J. Rigdon, Comming Soon to the Internet: Tools to Add Glitz to the Web's Offerings, Wall Street Journal, Aug. 15, 1995.

J. Martin, TCP/IP Networking, PTR Prentice Hall, 1994 (pp. 147–148).

Primary Examiner—Meng-Ai T. An
Assistant Examiner—Walter D. Davis, Jr.
Attorney, Agent, or Firm—Skadden, Arps et al.

[57] **ABSTRACT**

Methods and apparatus are provided for selecting advertisements and other information from a computer network database based on user defined preferences and transmitting the selected advertisement in background mode over a communications link between the computer network and a local computer with minimal interference with other processes communicating over the communications link. This method includes monitoring the communications link and transmitting portions of the advertisement when the communications link line utilization is below a preestablished threshold. Methods and apparatus are also provided for displaying or otherwise presenting the selected advertisements on the user's computer. Additional methods and apparatus are provided for selecting and presenting information stored on a local storage media based on user defined preferences.

14 Claims, 8 Drawing Sheets

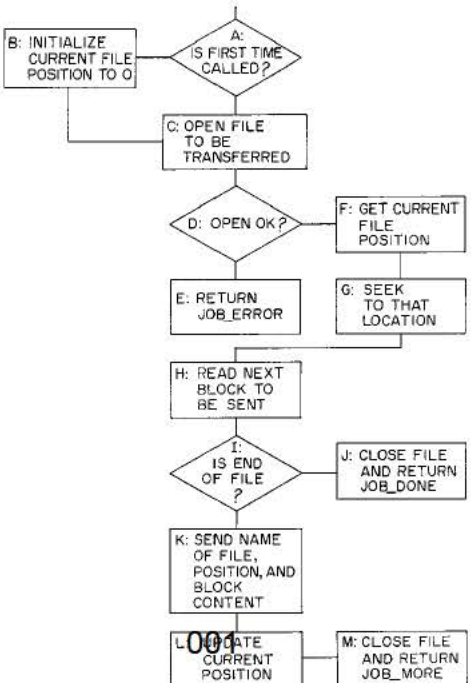

POSTSCRIPT 1018

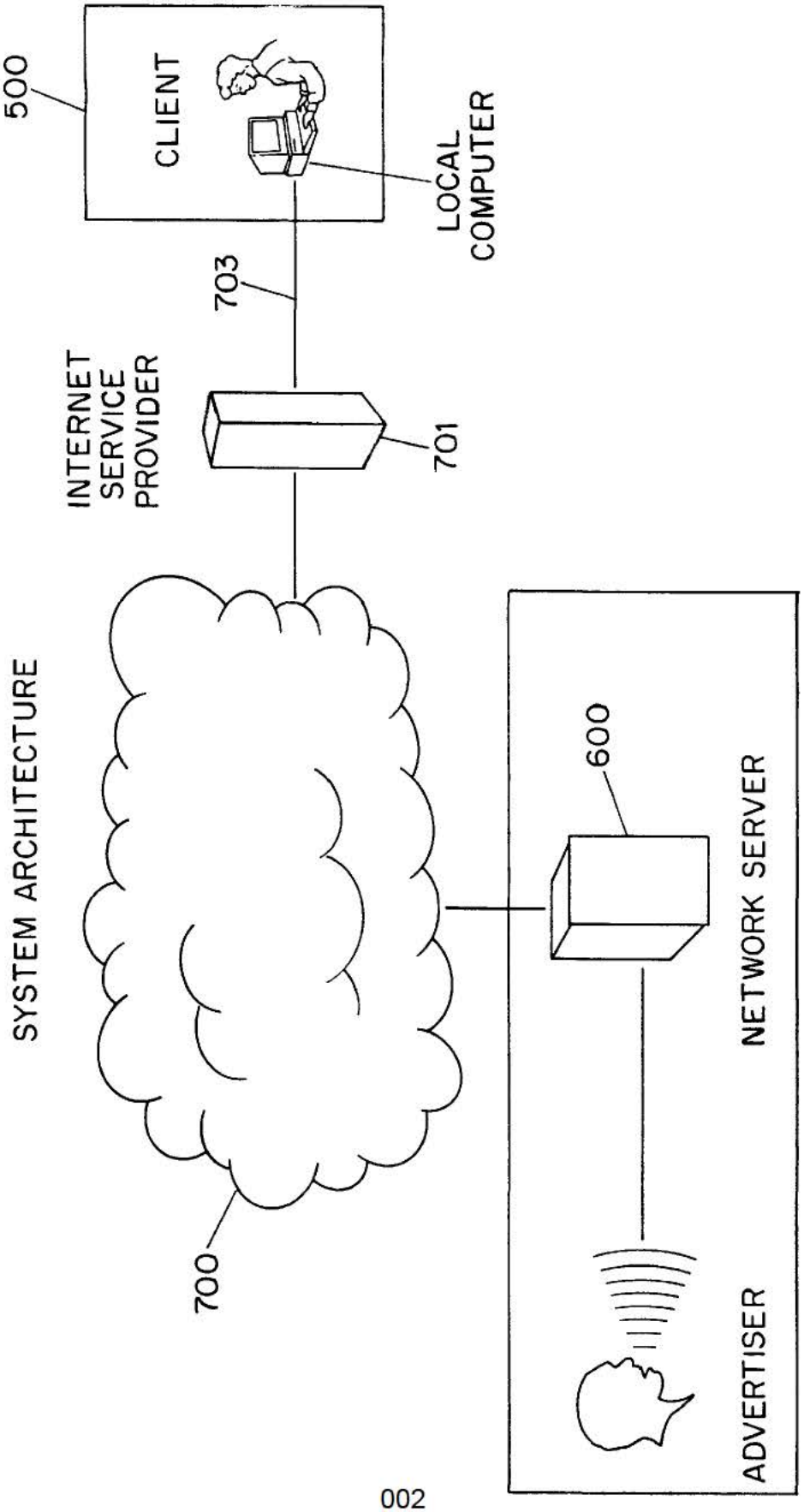
SYSTEM ARCHITECTURE
500
CLIENT
LOCAL COMPUTER
703
INTERNET SERVICE PROVIDER
701
700
600
NETWORK SERVER
ADVERTISER

FIG. 1

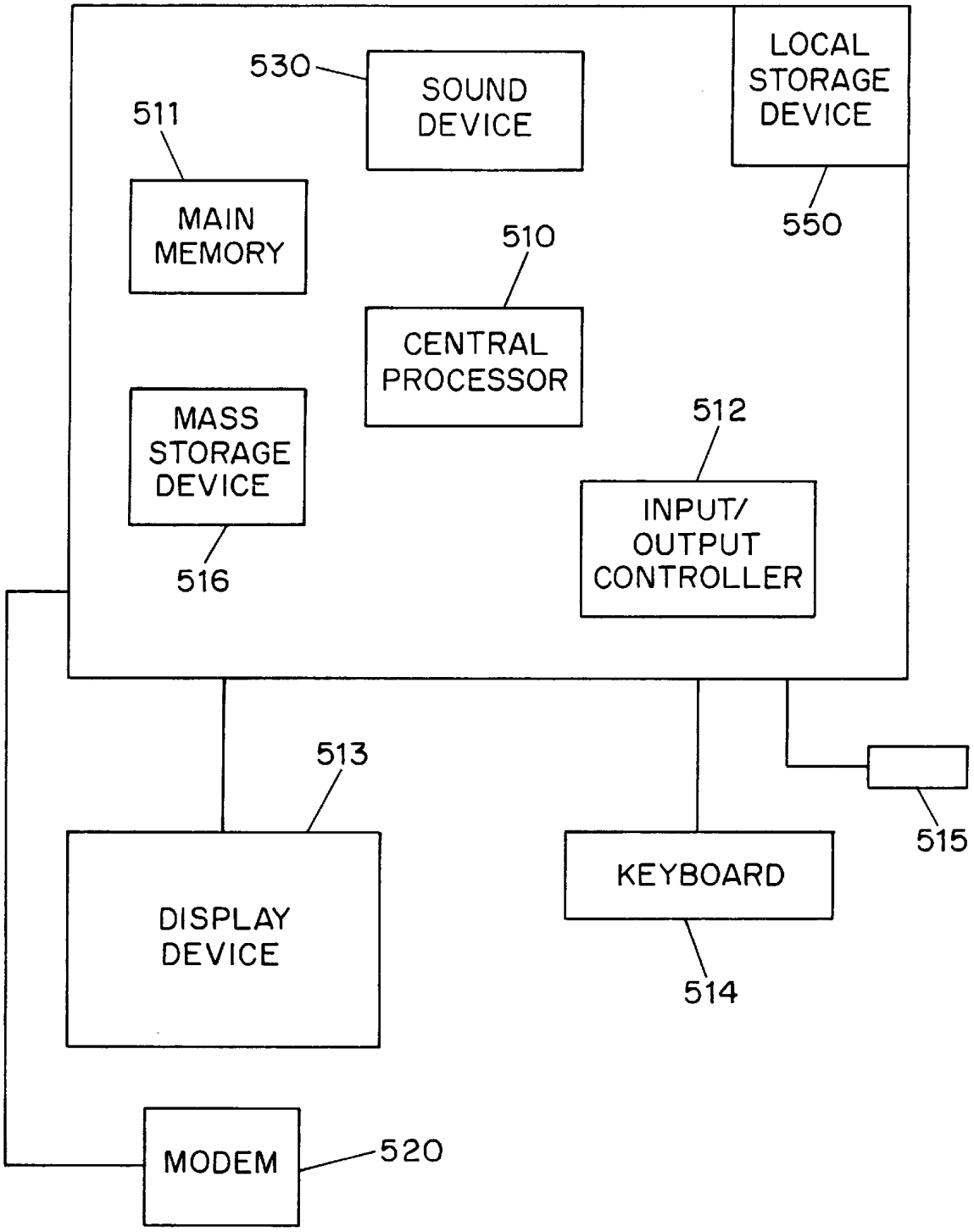
530
SOUND DEVICE
LOCAL STORAGE DEVICE
511
MAIN MEMORY
550
510
CENTRAL PROCESSOR
MASS STORAGE DEVICE
512
INPUT/ OUTPUT CONTROLLER
516
513
515
DISPLAY DEVICE
KEYBOARD
514
MODEM
520

FIG. 2

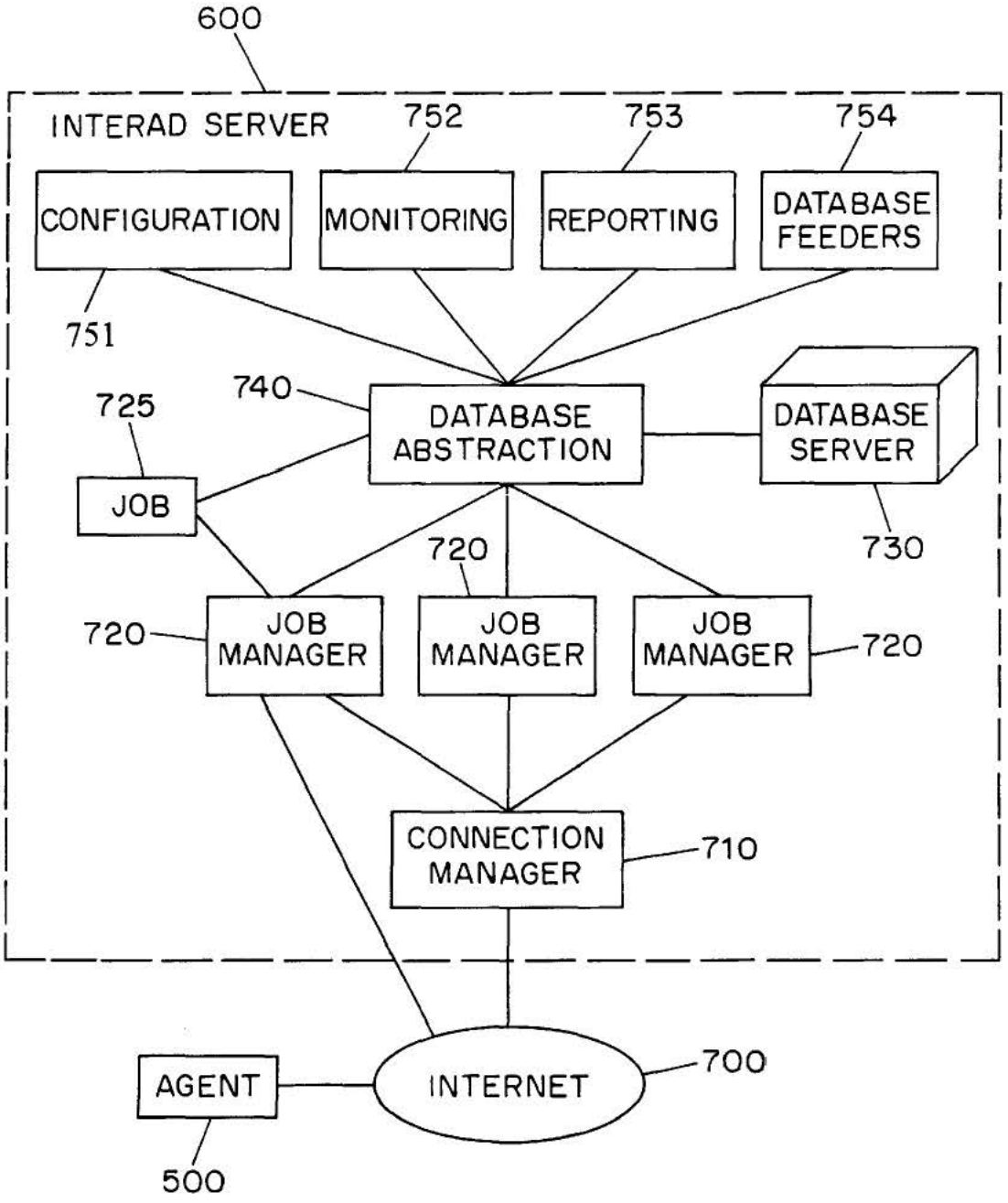
600
INTERAD SERVER
752
753
754
CONFIGURATION
MONITORING
REPORTING
DATABASE FEEDERS
751
740
725
DATABASE ABSTRACTION
DATABASE SERVER
JOB
730
720
720
JOB MANAGER
JOB MANAGER
JOB MANAGER
720
CONNECTION MANAGER
710
AGENT
INTERNET
700
500

FIG. 3

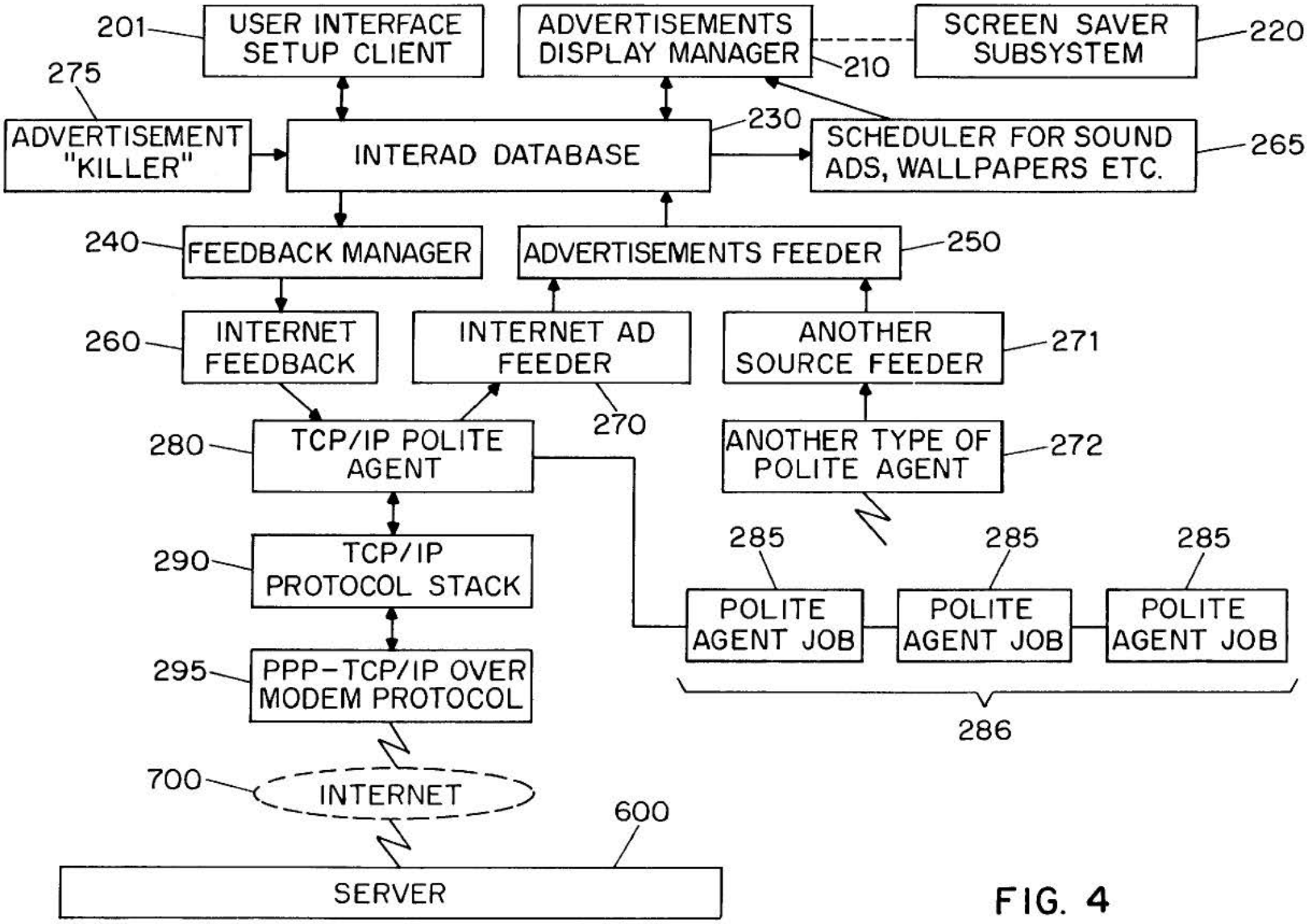
201
USER INTERFACE SETUP CLIENT
ADVERTISEMENTS DISPLAY MANAGER
210
SCREEN SAVER SUBSYSTEM
220
275
ADVERTISEMENT "KILLER"
INTERAD DATABASE
230
SCHEDULER FOR SOUND ADS, WALLPAPERS ETC.
265
240
FEEDBACK MANAGER
ADVERTISEMENTS FEEDER
250
260
INTERNET FEEDBACK
INTERNET AD FEEDER
270
ANOTHER SOURCE FEEDER
271
280
TCP/IP POLITE AGENT
ANOTHER TYPE OF POLITE AGENT
272
285
285
285
290
TCP/IP PROTOCOL STACK
POLITE AGENT JOB
POLITE AGENT JOB
POLITE AGENT JOB
295
PPP-TCP/IP OVER MODEM PROTOCOL
286
700
INTERNET
600
SERVER

FIG. 4

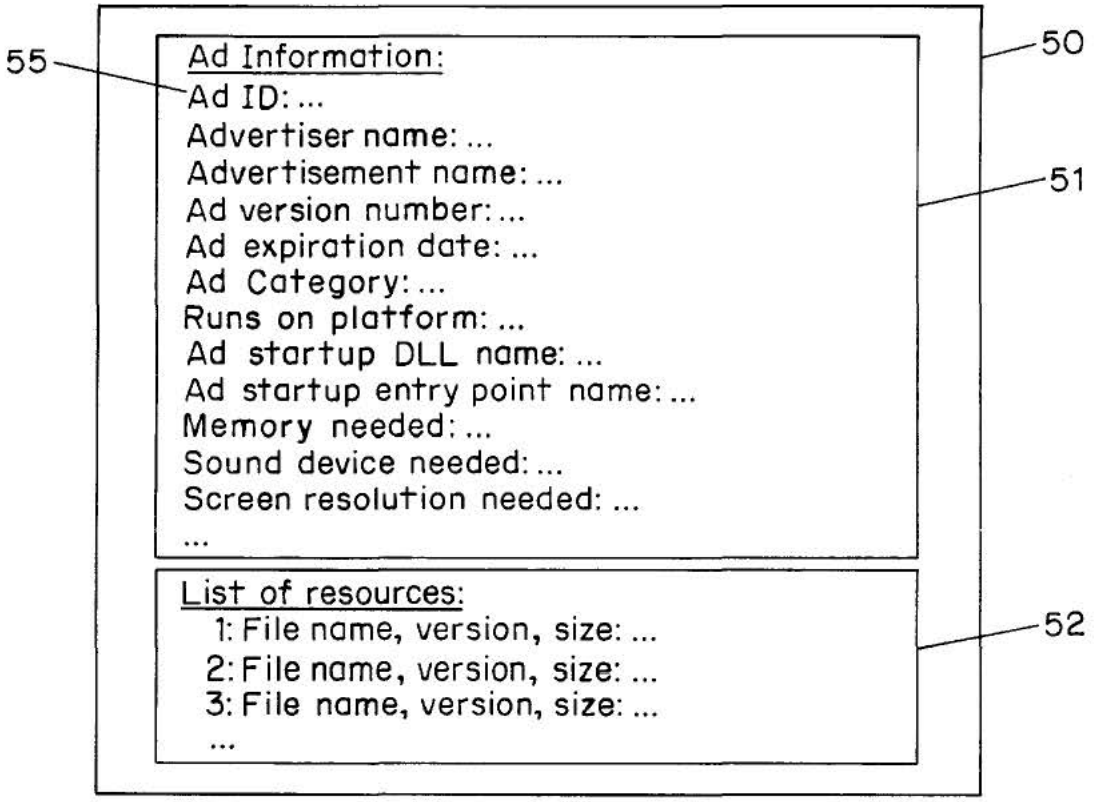
55
50
51
52
Ad Information:
Ad ID: ...
Advertiser name: ...
Advertisement name: ...
Ad version number: ...
Ad expiration date: ...
Ad Category: ...
Runs on platform: ...
Ad startup DLL name: ...
Ad startup entry point name: ...
Memory needed: ...
Sound device needed: ...
Screen resolution needed: ...
...
List of resources:
1: File name, version, size: ...
2: File name, version, size: ...
3: File name, version, size: ...
...

FIG. 5

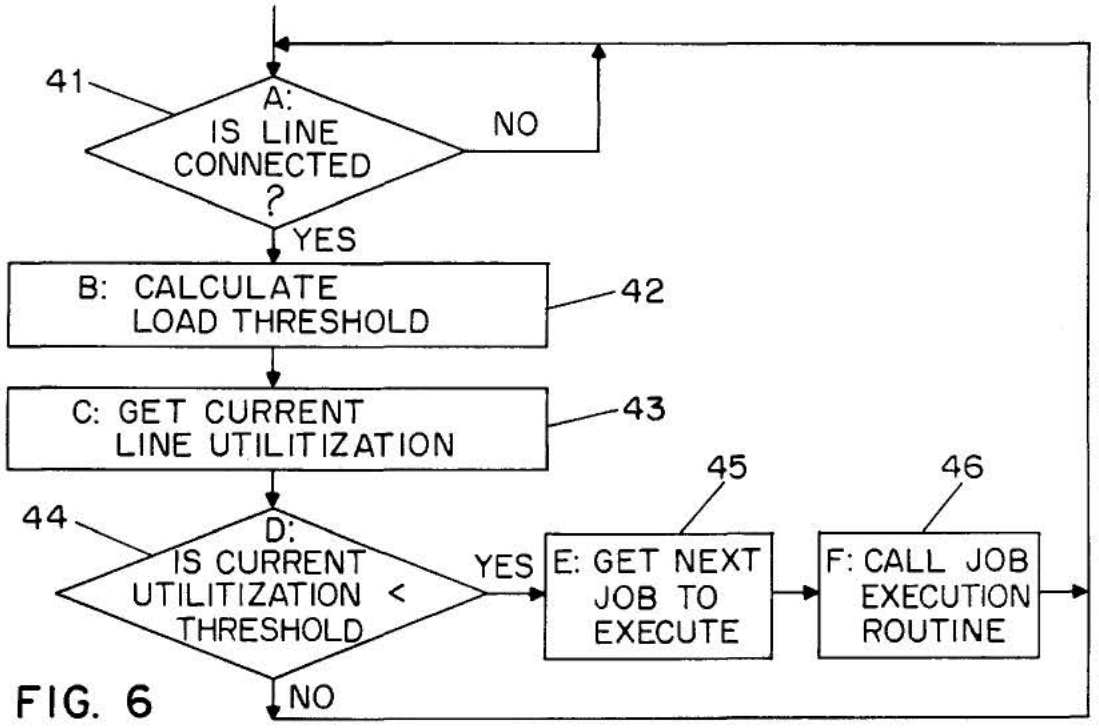
41
A: IS LINE CONNECTED ?
NO
YES
B: CALCULATE LOAD THRESHOLD
42
C: GET CURRENT LINE UTILITIZATION
43
44
D: IS CURRENT UTILITIZATION < THRESHOLD
YES
NO
45
E: GET NEXT JOB TO EXECUTE
46
F: CALL JOB EXECUTION ROUTINE

FIG. 6

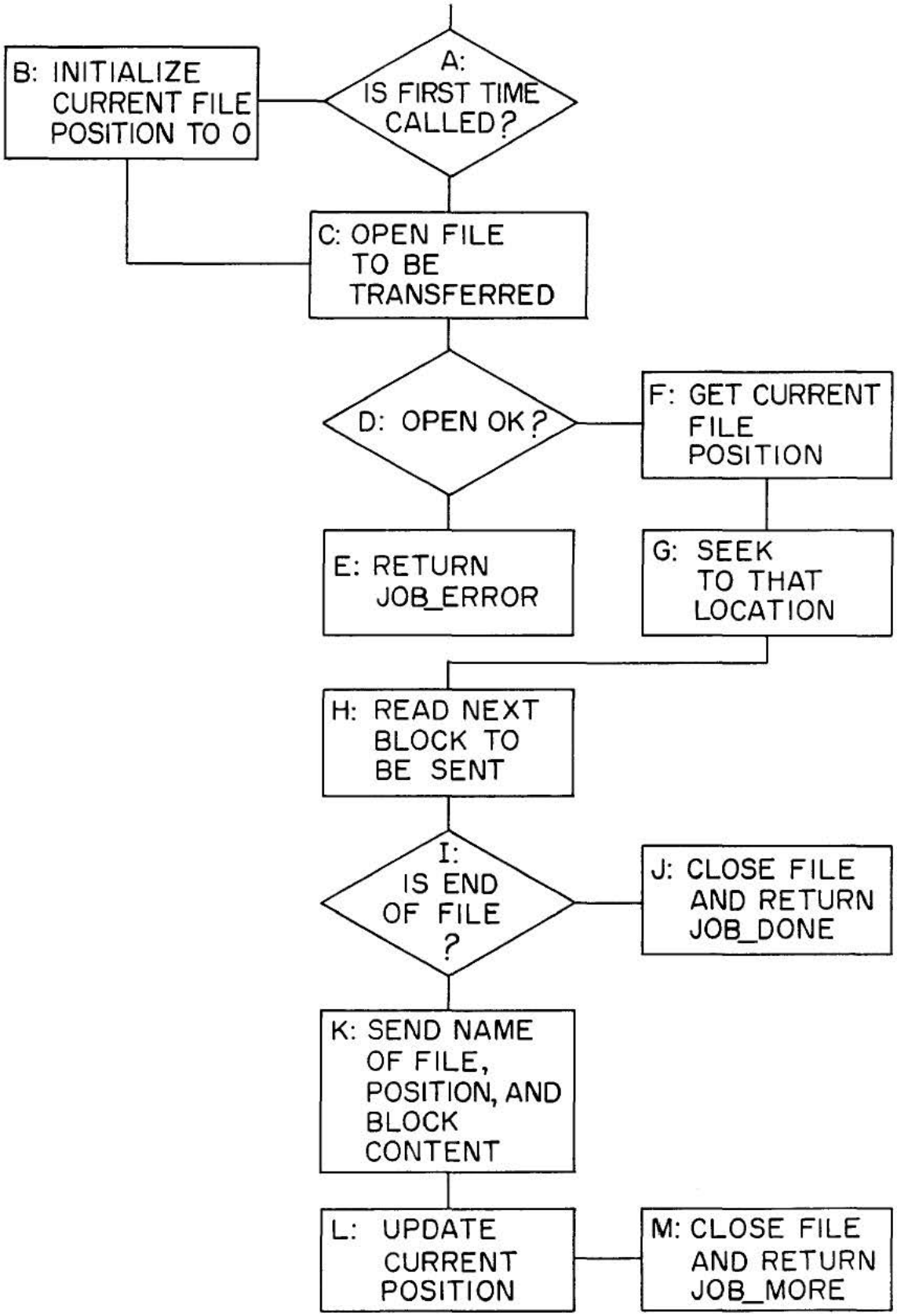
A: IS FIRST TIME CALLED?
B: INITIALIZE CURRENT FILE POSITION TO 0
C: OPEN FILE TO BE TRANSFERRED
D: OPEN OK?
E: RETURN JOB_ERROR
F: GET CURRENT FILE POSITION
G: SEEK TO THAT LOCATION
H: READ NEXT BLOCK TO BE SENT
I: IS END OF FILE ?
J: CLOSE FILE AND RETURN JOB_DONE
K: SEND NAME OF FILE, POSITION, AND BLOCK CONTENT
L: UPDATE CURRENT POSITION
M: CLOSE FILE AND RETURN JOB_MORE

FIG. 7

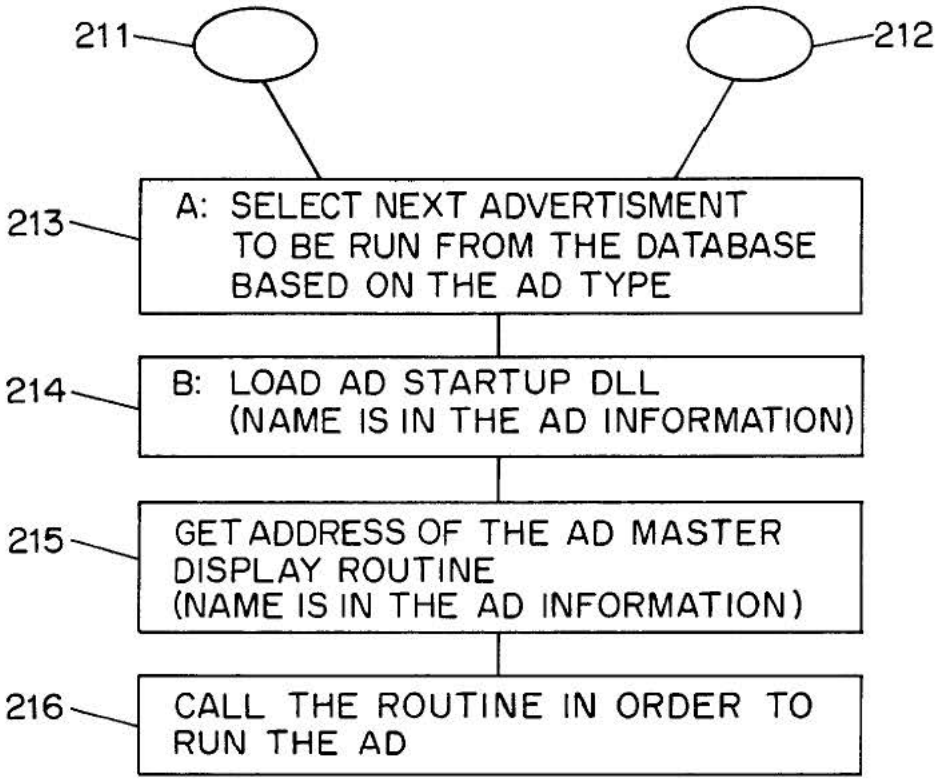
211
212
213
A: SELECT NEXT ADVERTISMENT TO BE RUN FROM THE DATABASE BASED ON THE AD TYPE
214
B: LOAD AD STARTUP DLL (NAME IS IN THE AD INFORMATION)
215
GET ADDRESS OF THE AD MASTER DISPLAY ROUTINE (NAME IS IN THE AD INFORMATION)
216
CALL THE ROUTINE IN ORDER TO RUN THE AD

FIG. 8

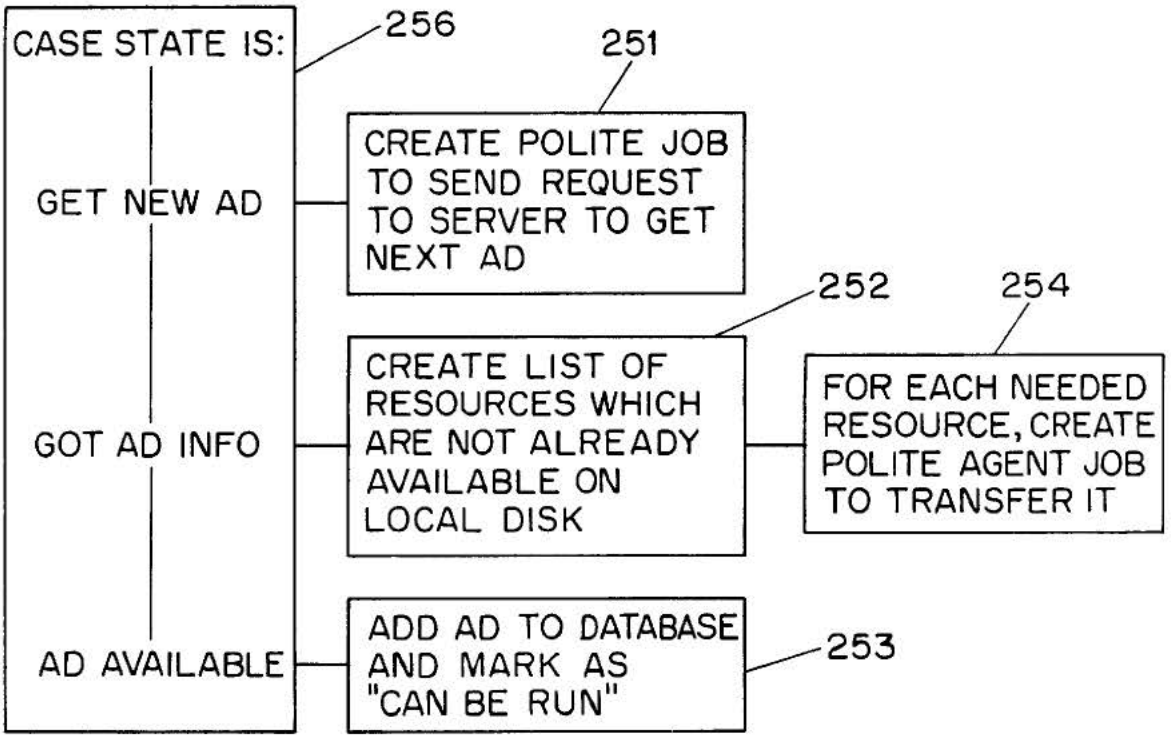
CASE STATE IS:
256
251
GET NEW AD
CREATE POLITE JOB TO SEND REQUEST TO SERVER TO GET NEXT AD
252
254
GOT AD INFO
CREATE LIST OF RESOURCES WHICH ARE NOT ALREADY AVAILABLE ON LOCAL DISK
FOR EACH NEEDED RESOURCE, CREATE POLITE AGENT JOB TO TRANSFER IT
AD AVAILABLE
ADD AD TO DATABASE AND MARK AS "CAN BE RUN"
253

FIG. 9

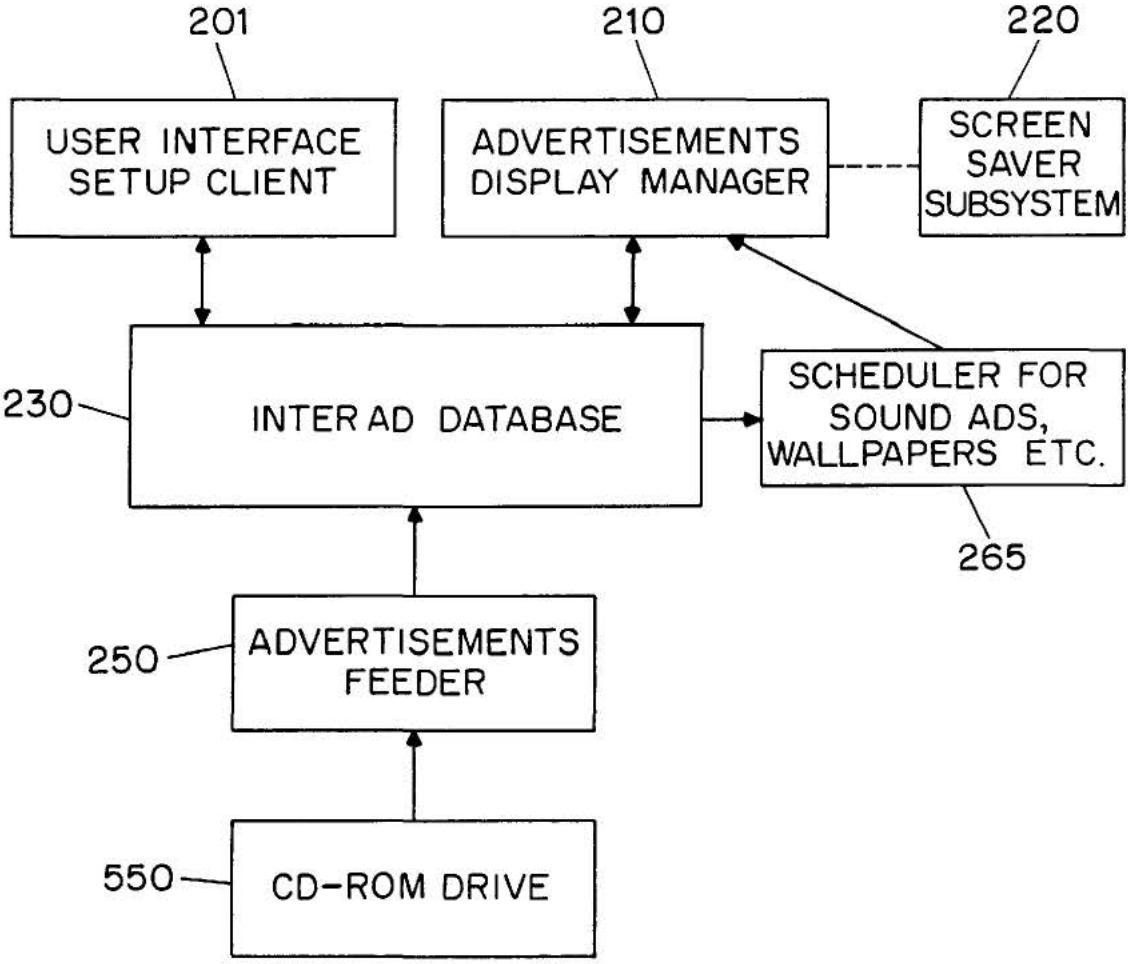
201
210
220
USER INTERFACE SETUP CLIENT
ADVERTISEMENTS DISPLAY MANAGER
SCREEN SAVER SUBSYSTEM
230
INTER AD DATABASE
SCHEDULER FOR SOUND ADS, WALLPAPERS ETC.
265
250
ADVERTISEMENTS FEEDER
550
CD-ROM DRIVE

FIG. 10

METHOD AND APPARATUS FOR TRANSMITTING AND DISPLAYING INFORMATION BETWEEN A REMOTE NETWORK AND A LOCAL COMPUTER

FIELD OF THE INVENTION

This invention relates generally to advertisement computer display systems and more particularly to a method and system for displaying advertisements and other information on a computer based on general user selected criteria and transmitting such information from a remote network to the local computer.

BACKGROUND OF THE PRESENT INVENTION

There are two major forms of advertising which are currently being employed on the Internet and commercial on-line services. One form is the use of a small advertisement on WEB pages which are commonly accessed. For example, a portion of the screen display for WEB pages used to access Internet searches may include a corporate logo or other advertisement material. Typical of this style of advertising is the Netscape™ Internet Browser software available from Netscape Communications Corporation of Mountain View California, which presents a box containing logos for various corporations on the computer display when the user performs a search. This form of advertising, however, is not very sophisticated and does not encourage user interaction.

Another form of advertising on the Internet is the creation of WEB "pages" or sites by advertisers. One variant of the use of a WEB page displays advertisements in a portion of the viewing area. A second variant, often used by corporate or other advertisers, is the use of WEB sites which employ attractive graphics in the hope of having the user interact with various advertising schemes. In addition, product ordering is usually available from these WEB sites. In most cases, users access these WEB sites by one of the following methods: knowing the Internet address; keyword searching; linking from a different WEB site; through an electronic shopping mall type site; through other advertisements on the Internet; or through the use of programs known as search browsers.

Current advertisers have attempted to improve the attractiveness of these WEB pages by including the use of sound, animated or rotating logos or pictures, and scrolling information. One system, Hot Java, available from Sun Microsystems, supports the execution of small applications programs written in a specific programming language executing within the browser on the local computer. This allows the WEB pages to provide richer content, such as animation or scrolling sports scores across a user's computer display, and better interaction with users. These effects, however, are only available while the user is viewing the specific WEB page incorporating the Hot Java technology.

Despite the fast and furious growth in this advertising sector, WEB sites are still regarded as "passive" advertising used predominantly for a corporate image rather than for selling products. Specifically the following drawbacks describe the current state of advertising on the Internet: transmitting the advertising information consumes a large amount of the bandwidth of the communications link between the user's computer and the network; access is initiated by the user rather than the advertiser; the user rather than the advertiser pays for access; accessing a site is a time consuming "hit or miss" process; and the process may improve the corporate image but creates little product

U.S. Pat. No. 5,105,184 to Pirani et al. ("Pirani") discloses a system integrating commercial advertisements with computer software. The system discloses integrating commercial advertisements with different types of screens. Pirani, however, does not provide for any user input at the local computer as to the types of advertisements which are to be displayed. Thus, users would be forced to view numerous advertisements of which they are likely to have no interest. This will attenuate the users attention to the advertisements and decrease their effectiveness.

As noted above, a significant problem with current methods for advertising on computer networks is the consumption of significant portions of the bandwidth of the communications link between the user's computer and the computer network. Prior systems have attempted to utilize essentially unused time in telephone networks to deliver advertising or other information. U.S. Pat. No. 5,321,740 to Gregorek, et al. ("Gregorek") discloses a marketing system over an existing telephone network which modifies a portion of the call processing system to play an informational announcement in place of the usual ringback or busy signals. Gregorek differs from the present invention in a number of ways, including the fact that it does not provide any means for interacting with computers over a computer network. Also, Gregorek delivers the informational announcement only during a short splice of time when the user is waiting for callback information.

Current file transfer protocols, such as the File Transfer Protocol ("FTP") and the Trivial File Transfer Protocol ("TFTP"), for transferring files from a remote network, such as the Internet, via a communications link to a local computer are designed to transfer files as quickly as possible. Each computer process executing such a protocol attempts to make maximum use of the available communication resources. This leads to interference and an inevitable slowing down of other computer processes attempting to communicate over the communications link. There exists a need, therefore, for a file transfer process which is designed to behave as a background task and have a minimal impact on foreground communications.

There also exists a need to utilize the computer to display locally stored advertisements. Several software products provide "yellow pages" on CD-ROMs or other media such as floppy disks. The user may use these yellow pages to search for products or advertisers by name or description. This system of advertising is limited, however, in that it requires the user to actively search for advertisers or products and therefore does not spontaneously display products to the user.

Microsoft Windows interface provides a rudimentary form of spontaneous advertising by incorporating a Microsoft Windows logo as an option in its screen saver utility. This system, however, offers only a single advertisement in response to a user's response and therefore does not offer a variety of periodically changed advertisement content based on a user's interests.

SUMMARY OF THE INVENTION

The object of the present invention is to provide a process for transmitting an information file between a local computer and a remote computer network over a communications link with minimal interference to other processes executing on the computer which are also transmitting over the communications link.

It is a further object of the present invention to provide a

ments and other informational messages on a computer by allowing a user to select from a variety of advertisement or informational categories.

It is a further object of the present invention to provide a method and system of downloading and presenting individualized advertisements and other informational messages from a remote network to a local computer based on a user's selection of advertisement or informational categories.

It is a further object of the present invention to provide such a method and system of downloading and presenting individualized advertisements and other informational messages from a network to a local computer with minimal interference with other data being transmitted between the network and the local computer.

In one variant of the present invention, all advertisements or other informational messages originate on a network server which is accessed via the Internet or alternate on-line method. Select advertisements are transparently downloaded from the network server and stored locally on the user's local computer using a novel type of software referred to herein as a "Polite Agent." In a second variation, the entire advertisement database is locally stored on the local computer or a removable media such as CD-ROM. Manipulation and display of the advertising message is performed by software residing on the user's PC in accordance with preconfigured user preference information.

The advertisement is preferably displayed during idle time as a screen saver utility when the computer is not receiving keyboard input or updating the user's display. Other techniques for displaying the advertisement, such as periodic audio-only messages, screen background wallpaper, cursor modifications, and display in a window on the user's computer display are also available.

Users may enter their preferences by directly choosing categories of advertising or other informational content which most interest them or through interactive games and quizzes. Users may directly respond to advertising messages by participating in contests, requesting further product information, or ordering the advertised product. The advertisements are made attractive to the user by employing a variety of video, animation, sound or any other multimedia effects. Content may be based on an interactive theme such as a contest or special discount offers for on-line customers.

The system monitors the user's interaction with the advertisements and produces raw data on how many times a particular advertisement was accessed as well as the user's response to advertisements. All pertinent information is stored and sent back to a network server where it is made available to the advertisers. User requests for additional information may be directed to the advertiser itself or to the advertiser's WEB site on the network.

The system further comprises the use of a background software process, the Polite Agent, for transferring information between the network and the local computer. The Polite Agent monitors the communications link between the network and the local computer and transfers small portions of the information when the communications link utilization rate is low. In this manner the Polite Agent avoids significant interference with other communications applications transmitting over the communications link. The Polite Agent may also be utilized to transmit other types of information content, such as news, weather, stock quotes, sports scores, software updates or trip reservation information.

BRIEF DESCRIPTION OF THE DRAWINGS

For a more complete understanding of the present Description taken in conjunction with the accompanying drawings in which:

FIG. **1** is a functional block diagram of a system architecture in accordance with the present invention;

FIG. **2** is a functional block diagram of a local computer and its related components in accordance with the present invention;

FIG. **3** is a functional block diagram of the software architecture components of the advertising system network server in accordance with the present invention;

FIG. **4** is a functional block diagram of the software architecture components of the local computer in accordance with the present invention;

FIG. **5** a schematic representation of an advertisement file in accordance with the present invention;

FIG. **6** is a flowchart illustrating a method for a polite agent for communicating information with a remote network in accordance with the present invention;

FIG. **7** is a schematic representation of a job for transmitting data in accordance with the present invention;

FIG. **8** is a flowchart illustrating a method for an advertisement display manager constructed in accordance with the present invention;

FIG. **9** is a flowchart illustrating a method for an advertisement feeder for downloading advertisements from a network constructed in accordance with the present invention; and

FIG. **10** is a functional block diagram of an advertising system for displaying a local database of advertisements constructed in accordance with an alternative embodiment of the present invention.

DETAILED DESCRIPTION

Preferred embodiments of the present invention will now be described with continued reference to the drawings.

System Architecture

1. Network Architecture

FIG. **1** shows an overall view of a preferred embodiment of the system architecture. The Local Computer **500** is physically connected to the Network Service Provider **701** via a Communications Link **703**. The Network Service Provider **701** provides access to the Network **700**. Advertising System Server **600** is one of the nodes on the Network **700**.

a. Local Computer

As shown in FIG. **2**, the Local Computer **500** preferably includes a Central Processor **510**, a Main Memory **511**, an Input/Output Controller **512**, a Display Device **513**, input devices such as a Keyboard **514** and a Pointing Device **515** (e.g., mouse, track ball, pen, slide pointer or similar device), and a Mass Storage Device **516**. These components communicate through a system bus or similar architecture.

Additionally, the Local Computer **500** is preferably connected to an internal or external Modem **520** or like device for communication with the Network **700**. Alternatively, the Local Computer **500** may be connected via an ISDN adapter and an ISDN line for communications with the Network **700**. The Modem **520** optionally allows for the establishment of voice calls through software control.

The Local Computer **500** preferably also includes a Sound Device **530**. The Local Computer **500** may also include a Local Storage Device **540** such as a floppy disk, CD-ROM or like device for local storage of the Local Advertisement Database **550**.

The Local Computer **500** is preferably under the control

interface, and most preferably operated under the Microsoft® Windows-95 platform available from Microsoft Corporation of Redmond, Wash. However, the present invention may be embodied on a variety of different platforms, including Macintosh, UNIX, NextStep, MS-DOS, and the like.

b. Network

The Network **700** is preferably the World-Wide Internet. The World-Wide Internet ("Internet") is a world-wide network connecting thousands of computer networks. The dominant protocol used for transmitting information between computers on the Internet is the TCP/IP Network Protocol. Computers connect to the Internet either a fixed connection, in which case they become a "permanent" node on the Internet, or a dial-up connection, in which case they act as a node on the network as long as the connection is active. Internet addresses are the numbering system used in TCP/IP communications to specify a particular network or computer on the network with which to communicate.

The invention may also be practiced with commercial on-line services such as America Online, available from America Online Inc., CompuServe, available from H&R Block Inc., Prodigy, available from Prodigy Services, Microsoft Network, available from Microsoft Corp., as well as other like services from a variety of companies such as AT&T Corporation and MCI Communications Corp.

c. Network Service Provider

The Network Service Provider **701** provides access to the Network **700**. Commercial providers include: BBN, Netcom, and Prarienet.

d. Advertising System Server

The system preferably includes at least one Advertising System Server **600**. The main roles of the Advertising System Server **600** are to store Advertisements **50**, transfer the Advertisements **50** to the Local Computer **500**, and collect user feedback. The Local Computer **500** will initiate communication with the Advertising System Server **600**. Each user is assigned a unique user-ID which can not be changed by the user. This user-ID is used by the Advertising System Server **600** to track each user's activity, including which Advertisements **50** have been downloaded to the user.

When the Local Computer **500** connects to the Advertising System Server **600**, the Local Computer **500** will upload the user's user-ID and the configuration and user preference information to the Advertising System Server **600**. The Advertising System Server **600** uses this information to select the next Advertisement **50** to be downloaded. The Local Computer **500** also may directly request a specific advertisement through the use of a unique Advertisement-ID 55 assigned to each Advertisement **50**. If feedback information has been collected it also will be uploaded when the Local Computer **500** connects to the Advertising System Service.

In an alternate embodiment of the present invention, the selected advertisement may be stored on any one of the plurality of advertising system servers connected to the Network **700**. In this embodiment, the Local Computer **500** initiates communication with a predetermined advertising system server. The predetermined advertising system server will select the next Advertisement **50** to be downloaded and transmit the network address of the advertising system server storing the Advertisement **50**. The Local Computer **500** uses the transmitted network address to request the selected Advertisement **50** from the appropriate advertising system server.

The Advertisements **50** stored on the Advertising System

languages. The Advertising System Server **600** will use each user's native language-ID to transmit the appropriate natural language version of the Advertisement **50**.

2. Advertising System Server Software Architecture

a. Software Modules

FIG. **3** is a functional block diagram of a software architecture of the Advertising System Server **600** embodying the invention.

The Local Computer **500** initially connects to the Connection Manager **710** which is responsible for allocating an available Job Manager **720** and returning its address to the agent. The Job Manager **720** then handles all further conversation with the Local Computer **500**. As noted above, the architecture optionally allows for a plurality of advertising system servers each running a plurality of Job Managers **720**. Thus, the Job Manager address returned to the Local Computer **500** may contain both the Internet address of the server and the process identification. The Job Manager **720** identifies and authenticates the user-ID against the Server Database **730**.

The Job Manager **720** creates a Network Job **725** for each user it communicates with. Each Network Job **725** communicates with the Local Computer **500** to select and download Advertisements **50**; collect feedback from the Local Computer **500**; check the user's participation and any awards from contests, etc.; and upgrades and installs the Local Computer **500** software versions. The Network Job **725** is responsible for selecting the next downloaded Advertisement **50** based on user configuration and preference data as described herein.

Under most current network models, including the current implementation of the Internet, users are typically charged based on the amount of time they are connected to specific resources on the network. Thus, the current system of downloading advertisements and other information in the background does not increase the cost to the user, as transmission occurs in background mode while the user is already connected to the network Service Provider **701**. Future implementations of these networks, however, may charge users based on the amount of information, or number of network "packets" or other units of data, the user has received. On such networks, the system should be able to track the amount of information transmitted, such as by counting the number advertisements, advertisement resources, or network packets (also known as "datagrams"), frames, segments or other units of network data containing advertisements. The Network Service Provider **701** may use this information to charge the system generated transmissions to the advertisers rather than the users. The Advertisement System Server **600**, and most preferably the Network Job **725**, will be responsible for tracking the amount of information transmitted by the system. Alternatively, the TCP/IP Polite Agent **280** or other software process on the Local Computer **500** will track this information.

The Server Database **730** contains the system information, including: the Advertisements **50** or other informational content; listings of users; listings of advertisers; listings of network service providers; billing information; audit logs and statistics. The Server Database **730** also maintains information on active connections and their activity. The Server Database **730** is accessed through the Database Abstraction **740** interface which provides a layer of interface for all modules on the Advertising System Server **700**.

In addition to providing Advertisements **50** and other informational content to local computers, the Advertising

services, such as billing information, viewing and gathering statistics on feedback information, and advertisement display audit-logs which may be sorted according to various filters such as advertiser or advertising category. The Advertising System Server **700** includes various other software administration tools for maintaining the system, including: a Database Feeder **754** for modifying the Server Database **730**; Monitoring Tools **752** for viewing the activity of the system; Configuration Tools **751** for modifying the behavior of the system; and Reporting Tools **753** for creating reports concerning the system.

b. Advertisement Records

FIG. **5** shows a schematic representation of an Advertisement **50**. Each Advertisement **50** in the Server Database **730** comprises an Advertisement Information Record **51** and a Resource List **52**. The Advertisement Information Record **51** contains information identifying the advertisement (including the Advertisement-ID 55), its category, its size, and the hardware required to display the advertisement, such as sound boards, screen resolution and multimedia requirements. The Resource List **52** contains a list of resources (bitmaps, animations, digitized audio segments, executable code, etc.) that must exist on the Local Computer **500** or associated local LAN in order to present the advertisement. The Resource List **52** includes a unique resource-ID, a resource type, and a resource pointer. The resource pointer identifies a file, a database record, a block of data, or other means of identifying the resource. In this manner, resources can be shared by various Advertisements **50**.

3. Local Computer Software Modules

a. Software Architecture

FIG. **4** is a functional block diagram of the software modules and processes of the software architecture for a preferred embodiment of the invention on the Local Computer **500**, including a User Interface Setup Process **201**, Advertisements Display Manager **210**, Screen Saver Subsystem **220**, User Preference and Advertisements Database **230**, Feedback Manager **240**, Advertisements Feeder **250**, Internet Feedback **260**, Advertisement Killer **275**, Scheduler **265**, Internet Feeder **270**, TCP/IP Polite Agent **280**, TCP/IP Protocol Stack **290**, and PPP-TCP/IP Over Modem Protocol **295**.

The User Interface Setup Process **201** allows the user to configure the behavior of the system on their desktops. The Advertising Display Manager **210** is responsible for selecting and displaying Advertisements **50** from the User Preference and Advertisements Database **230**. The Advertisements Feeder **250** adds new Advertisements **50** to the User Preference and Advertisements Database **230**, while the Advertisement Killer **275** purges old Advertisements **50**. The Scheduler **265** schedules the display of time dependent Advertisements **50**, such as background wallpaper, sound only advertisements, and cursor advertisements. The Feedback Manager **240** sends user preferences, user statistics and feedback information to the Advertising System Server **600**. The TCP/IP Protocol Stack **290** and PPP-TCP/IP Over Modem Protocol Subsystem **295** handle the lower level details of transferring information to the Network **700**. The TCP/IP Polite Agent **280** is responsible for monitoring the communications line utilization rate and transmitting data during times of low communications line utilization.

b. Platform Implemented Functions

The Screen Saver Subsystem **220** tracks user interaction with the system. When the Screen Saver Subsystem **220** detects that the system has been idle, for example, when there has been no user interaction with the computer other user input device), for a preconfigured time, it activates the Advertisements Display Manager **210** which will select an advertisement and display it.

In prior systems, screen savers are graphically oriented displays which appear after the computer has been idle for a predetermined period of time. This change of display is primarily designed to prevent screen 'burn in' on the monitor. Screen savers of the prior art are limited to one or more predefined content themes. By utilizing on-line communications, the screen saver of the present invention provides a wide variety of potential content themes which may be personalized and modified on a timely basis in accordance with user preferences.

The general mechanisms for implementing the Screen Saver Subsystem **220** are known in the art. In the preferred embodiment, the Windows-95 operating system monitors user input and calls a preconfigured module when the user has not entered input for a predetermined period. In the preferred embodiment, this module is the Advertisements Display Manager **210**. The Screen Saver Subsystem **220** is further described in Microsoft's *Windows*-95 *Software Development Kit*, including: WIN 32 Overview and reference manuals (chapter 79—Screen Saver Library), available from Microsoft Corp., which is hereby incorporated by reference. On other platforms which do not provide similar functionality, the Advertisements Display Manager **210** itself must monitor for idle time.

The general mechanisms and protocols for communicating with a network, such as the Internet, or on-line service, are known in the art. See, e.g., Stallings, W., *Data and Computer Communications*, Second Edition, Macmillan Publishing Co., (1988). The preferred embodiment utilizes the TCP/IP protocol (Transport Control Protocol/Internet Protocol) which is also well known in the art. See, e.g., Martin J., *TCP/IP Networking*, PTR Prentice Hall (1994). The disclosure of each of the foregoing is hereby incorporated by reference. Methods of implementing these functions on other platforms are known to those of ordinary skill in the art.

The TCP/IP Protocol Stack **290** is a set of programs that mediate between application programs and the physical communication line. The TCP/IP Protocol Stack **290** provides application programs with a standard set of function calls for communicating with other application programs connected to the Network **700**. Thus the application programs, here the TCP/IP Polite Agent **280**, do not have to account for the nature of the physical communication line or error correction.

The PPP-TCP/IP Over Modem Protocol **295** module provides the ability to use the TCP/IP protocol over a specific type of physical communication line, i.e. a pair of modems connected over a telephone line. In the preferred embodiment, the functions of the TCP/IP Protocol Stack **290** and PPP-TCP/IP Over Modem Protocol **295** are implemented within the Windows-95 platform and are accessed from the TCP/IP Polite Agent **280** via system calls. See Microsoft Windows Socket Specifications (rev. 1.1), the disclosure of which is hereby incorporated by reference. Methods of implementing these functions on other platforms are known to those of ordinary skill in the art.

c. User Preference and Advertisement Database

The User Preference and Advertisement Database **230** contains various information needed by the system. The primary data stored is the advertisement information (including executable code modules, bitmaps, video clips and sound clips). The database also stores display statistics,

Typically, the User Preference and Advertisement Database **230** is located on the Mass Storage Device **516**, however, in LAN installations, the User Preference and Advertisement Database **230** may be stored on a LAN server. This optimizes storage for the system, since an Advertisement **50** needs to be loaded on the LAN only once and is available for display by each workstation on the LAN.

The User Preference and Advertisement Database **230** is preferably accessed through a well-defined Application Programmer's Interface (API), as is known in the art. In the preferred embodiment, this may be an OLE2 compound file or other database means supplied by third-party software vendors. Thus, the location of the User Preference and Advertisement Database **230** will be transparent to the other processes.

d. User Interface Setup

The User Interface Setup Process **201** allows the user to configure the behavior of the system. This process allows the user to input and view preferences as to advertising categories, as well as local computer configuration data.

Local configuration data typically includes:

a) The Advertising System Server **600** Internet name or Internet address.

b) The amount of disk space on the Local Computer **200** or LAN which may be allocated to the advertising system.

c) The length of time an advertisement should be stored before it is deleted from the Local Computer **200**.

d) The overhead which may be caused by the advertisement transfer process, including the communications line threshold.

e) Screen saver delay time.

f) Whether feedback information may be sent to the Network **700**.

User preference information typically includes:

a) Listings of advertisement categories which are to be given high priority, and those categories which are to be banned from being downloaded or displayed. Typical advertisement categories are "SCUBA diving equipment," "Fast food vendors," "Toys for ages 8–14," or "Cigarettes" and the like. The actual list of categories will be provided by the Advertising System Server **600**.

b) Time periods during which sound-only advertisement are to be played.

c) Whether wallpaper or cursor advertisements are allowed.

d) Whether animation is allowed.

e) Time periods and types of foreground activities during which advertisements and feedback information may be transmitted.

f) Identification of the user's natural language.

Additionally the User Preference and Advertisement Database **230** stores information on the Local Computer's **200** platform capabilities, such as sound boards, screen resolution and multi-media capabilities.

The Advertisement Feeder **250** will incorporate the advertising preference information, the Local Computer's platform capabilities, disk space limitations, and other configuration data into its request for new advertisements. The Advertising System Server **600** uses this information in selecting the next advertisement to be transmitted. The user preference and configuration data may alternatively be stored on the Advertising System Server **600**.

The Job Manager **720** on the Network Server **600** matches the user preferences and configuration data against the category information for the available Advertisements **50**. Advertisements **50** matching the user's high priority categories are selected first. Lower priority matches are also selected occasionally on a pseudo-random basis, such that Advertisements **50** within the user's high priority categories will have higher probabilities of being downloaded. The system also allows for increasing the probability of downloading particular advertisements **50**. This allows advertisers to pay increased rates to distribute advertisements faster and to a wider range of users.

User's preferably enter their preferences using whatever interfaces are most natural for the underlying platform. In the preferred embodiment, the user enters information through standard Windows-95 dialog boxes.

In one embodiment of the invention, the Advertising Display Manager **210** allows users to respond to Advertisements **50** being presented by selecting a user grading box which allows users to judge the Advertisements **50** on a scale from "do not show me this advertisement again" to "excellent." This information may be used to modify the user preferences, and may also be incorporated into user feedback information and sent to the Advertising System Server **600** for use by the advertisers.

The User Interface Setup Process **201** also allows users to browse through Advertisements **50** stored on their local system (hard disk or local LAN network), as well as those Advertisements **50** available from the Network **700**. For Advertisements **50** stored locally, whether downloaded from the Network **700** to the User Preference and Advertisement Database **230** or available on a Local Advertisement Database **550** stored on floppy disk, CD-ROM or like device, the User Interface Setup Process **201** displays a menu with the available Advertisements **50**. Each Advertisement **50** stored on the Network **700** or Local Advertisement Database **550** may optionally include a preview segment. The user may have the system present the preview of the Advertisement **50** such as a still image, a short animation sequence, or a sound clip. The user may then select the particular advertisement to be displayed. For Advertisements stored on the Network **700**, the Advertising System Server **600** will transmit a list of available Advertisements **50**. Users may also disable specific advertisements, or all advertisements of a specific advertiser from being transmitted to the Local Computer **500** or displayed.

e. Advertisement Display Manager

The Advertisement Display Manager **210** selects and displays Advertisements **50** from the User Preference and Advertisements Database **230**. The Advertisement Display Manager **210** is typically activated by the Screen Saver Subsystem **220** when the user has not entered input for a predetermined time, or from the Scheduler **265**. Alternatively, the user may directly access the Advertisement Display Manager **210** from the platform, such as through selecting an icon or other common method.

The Advertisement Display Manager **210** will display the collection of bitmaps, animation, and sound clips associated with the Advertisement **50**. FIG. **8** shows a flowchart of a preferred method of an Advertisement Display Manager **210** in accordance with the principles of the present invention. The Advertisement Display Manager **210** is typically called by either the Screen Saver Subsystem **220** to display a screen saver type advertisement after the system has been idle for a predefined period or by the Scheduler **265** to modify the background wallpaper or present a sound-only type advertisement on a periodic basis. The Advertisement Display Manager **210** selects and presents the next Advertisement **50** of the specified type to be presented from the User Preference and Advertisements Database **230**.

In the preferred embodiment, the display and other pre-

contained within the Advertisement **50** itself. In this manner the Advertisement Display Manager **210** can support a virtually unlimited number of presentation techniques. The code needed for presenting the advertisement such as a digital sound or video decoder or animation file player, is a resource available from the Resource List **52** within the Advertisement structure **50**. The resource may exist in a number of forms such as executable or interpreted code or scripting code such as that used in Hot Java. When the resource consists of interpreted or scripted code, the interpreter itself becomes an additional resource which must be made available to the Local Computer. If necessary, the Advertisement Feeder **250** will download this resource to the Local Computer **500**, using the same techniques as used to download other advertisement data.

Many platforms, including the preferred Windows-95 platform, include a multi-media subsystem that provides APIs for playing animation, sound clips, video clips, etc. See Win32 Programmer's Reference Manual, hereby incorporated by reference. Alternatively, there are a wide variety of stand-alone tools suitable for providing such functions on Windows, Macintosh and other platforms.

In the preferred embodiment, each Advertisement **50** will include a small .DLL with an entry point with a pre-defined name. This entry point will be called by the Advertisement Display Manager **210** in order to display the Advertisement **50**. The advertisement entry point is specific for each Advertisement **50**. When the advertisement entry point is called, the particular code needed to present the given Advertisement **50** will be executed.

User interaction with the Advertisement Display Manager **210** is preferably initiated by pressing a predesignated key, for example F**10**. When the Advertisement Display Manager **210** is active, all user input is routed directly to the Advertisement Display Manager **210**, thus allowing for user interaction with Advertisements **50**. The Advertisement Display Manager **210** selectively forwards certain keys to the default operating system routine, which will typically terminate the Advertisement Display Manager **210**. The user may interact with the Advertisement Display Manager **210** through a number of ways, including answering questioners, initiating a WEB browser to connect directly to an advertiser WEB page on the Network **700**, or automatically initiating a voice connection through the Modem **520** to the advertiser.

Additional aspects of the present invention utilize a variety of techniques for presenting the Advertisements **50**. These techniques include displaying advertising as the background "wallpaper" of the display or modifying the cursor to include an advertiser's logo or other symbol. Additionally, small advertising logos or other advertising content may be placed on the Display Device **513** either at a fixed location on the Display Device **513** or fixed relative to user display windows such that when the user display window is moved on the display the advertisement will move with the window. In the preferred Windows-95 environment, these functions are performed through system calls as described in the Win32 Programmer's Reference Manual, available from Microsoft.

An additional presentation technique is the use of sound-only advertising. The Advertisement Display Manager **210** will make use of a Sound Device **530** on the Local Computer **200**. Any sound devices supported by the platform are suitable. In the preferred embodiment, this includes the Sound Blaster card, available from Creative Labs.

f. Scheduler

The Scheduler **265** keeps track of the list of timing-dependent Advertisement **50**, as for example changing the wallpaper or playing a sound-only Advertisement **50**, the Scheduler **265** notifies the Advertising Display Manager **210**, which performs the required action.

g. Advertisements Feeder

The Advertisement Feeder **250**, is responsible for adding new Advertisements **50** to the User Preference and Advertisement Database **230**. Advertisements **50** preferably are provided from the Internet through the Internet Feeder **270**, however, the Advertisements Feeder **250** is not dependent on the type of advertisement source and may receive Advertisements **50** from other sources, such as commercial on-line services, via other feeder mechanisms and other types of polite agents, as shown by references **271** and **272**, respectively, in FIG. **4**.

FIG. **9** shows a flow chart of a preferred embodiment of an Advertisement Feeder **250** constructed in accordance with the invention.

To download a new Advertisement **50**, the Advertisement Feeder **250** first creates a Polite Agent Job **285** to request the Advertising System Server **600** to select the next advertisement for downloading (step **251**). The Advertising System Server **600** selects the next Advertisement **50** to be transferred based on the individual user's preferences and configuration and pricing parameters attached to each Advertisement **50**. The Advertising System Server **600** sends the Resource List **52**, such as executable code modules, bitmaps, animation, sound clips, scripting systems, etc., that the Advertisement **50** needs in order to be presented. The Advertisement Feeder **250** queries the User Preference and Advertisement Database **230** and determines which resources are already available locally, i.e. on the user's PC or LAN. The Advertisement Feeder **250** creates a Polite Agent Job **285** for each resource not in the User Preference and Advertisement Database **230**, requesting the Advertising System Server **600** to download only the necessary resources (steps **252**, **254**). Once the resources have been downloaded, the Advertisement Feeder **250** adds the Advertisement **50** to the User Preference and Advertisement Database **230** (step **253**).

An important part of the functionality of the client system is the ability to resume the transfer of an Advertisement **50** which had been only partially transferred during the previous connection., i.e. the client system is preferably able to re-establish transmission of a file after a break in the Communications Link **703**. Preferably, the client system will resume transmission from the point in the file at which communications was broken off. In the preferred embodiment, this functionality is implemented within the TCP/IP Polite Agent **280** and each Polite Agent Job **285**.

h. Advertisement Killer

The Advertisement Killer **275** periodically scans the User Preference and Advertisements Database **230**, and purges Advertisements **50** that satisfy its purge criteria. Typical criterion include the total time the advertisement has been stored and the number of times displayed. Additionally, Advertisements **50** are purged on user demand through user interaction with the Advertisements **50** or the User Interface Setup Process **201**.

i. Feedback Manager

The Feedback Manager **220** is responsible for sending feedback information to the Advertising System Server **600**. This information includes statistics on displayed Advertisements **50**, including user ratings of specific advertisements and the time and length an advertisement was displayed. The Feedback Manager **220** also transmits information which

Advertisements **50**, such as through games and questionnaires. This feedback information may be used as a basis for calculating the advertiser's charge.

j. Polite Agent Technology

The system incorporates a type of intelligent software agent technology referred to herein as a "Polite Agent." The role of the Polite Agent is to perform communication tasks in the background without imposing a noticeable overhead on the user. FIG. **6** illustrates the preferred embodiment of the TCP/IP Polite Agent **280** utilizing the TCP/IP protocol. The TCP/IP Polite Agent **280** transmits information during periods of low line utilization without causing a noticeable slowdown in the data transfer rate of other processes communicating over the Communications Link **703**. The TCP/IP Polite Agent **280** constantly monitors communications status and determines periods of low communication line utilization. It then uses the TCP/IP communications resources, available on the platform, to transfer a portion of the data. Preferably, the agent does not initiate the communication itself, but rather takes advantage of communications resources once the initial Communications Link **703** with the Network Service Provider **701** has been established, thus avoiding additional user charges.

If the communications resource utilization remains low and ample resources are available the software agent performs its designated data transfer task. Alternatively, if communications resource utilization becomes high due to other applications executing on the Local Computer **500** or the Communications Link **703** is disconnected (e.g., the line goes down), the TCP/IP Polite Agent **280** temporarily suspends its data transfer operation until ample resources are available once again. At that point, the TCP/IP Polite Agent **280** recovers the data transfer process from the point where the transfer was suspended, thereby avoiding the need to retransmit data.

Low line utilization occurs when the communications line is busy no more than a predetermined percentage of time. This threshold may be fixed (typically at 30%) user-configurable, or dynamic. When dynamically determined, the threshold may vary with a number of parameters such as the length of time the TCP/IP Polite Agent **280** has been waiting to transmit, the number or type of Polite Agent Jobs **285** on the Polite Agent Queue **286**, the amount of data which the TCP/IP Polite Agent wishes to transfer, and the type of data being transferred.

Neither the Advertisement Feeder **250** nor the Feedback Manager **240**, directly perform data transfer. Instead, they place Polite Agent Jobs **285** in the Polite Agent Queue **286** which will be called by the TCP/IP Polite Agent **280** when appropriate. The Polite Agent Jobs **285** perform the actual data transfer.

In the preferred embodiment of the invention, the target operating system will be Microsoft Windows-95 utilizing a TCP/IP protocol. Extension of these operations for different protocols or operating systems will be apparent to those of ordinary skill in the art.

In step A **(41)** of the TCP/IP Polite Agent process **280**, a check is made to see if the Communication Link **703** has been established. This can be done in various ways known to those skilled in the art. A preferred method is to "ping" (send a packet to and receive a response from) the Advertising System Server **600**. See, e.g., J. Martin, *TCP/IP Networking*, PTR Prentice Hall Inc. (1994) (pages 147–48), the disclosure of which is hereby incorporated by reference. An alternative method is to "ping" the Network Service Provider **701**.

In step B **(42)**, the line utilization threshold is calculated. embodiments of the present invention. Thus, the line utilization may be fixed, user-configurable or dynamic. The threshold calculation also preferably takes into account the load caused by communication generated by the Polite Agent Jobs **285** themselves. This prevents the TCP/IP Polite Agent from not transmitting when the Communications Link **703** is busy primarily due to its own communications.

In step C **(43)**, the current communication line utilization is obtained. For TCP/IP under Windows-95, statistical information regarding the communication line utilization is available from the operating system, including such information as bytes/second. In the preferred embodiment, this sampling does not impose a significant overhead on the system and therefore does not cause any noticeable degradation of foreground processes.

In step D **(44)**, the current communications line utilization is compared to the calculated threshold. If the current utilization is higher than the calculated threshold, the TCP/IP Polite Agent **280** will not perform communication and will return to step A. At this point the TCP/IP Polite Agent **280** may be temporarily suspended by the operating system.

In step E **(45)**, the next Polite Agent Job **285** to be executed is selected. Several Polite Agent Jobs **285** can be pending on the Polite Agent Queue **286**. The TCP/IP Polite Agent **280** will alternate between the Polite Agent Jobs **285** preferably on a round-robin schedule allowing all of the Polite Agent Jobs **285** to execute in turn.

In step F **(46)**, the Polite Agent Job **285** is executed. The Polite Agent Jobs **285** are designed in such way that they generate a small amount of communication, for example sending 1K of information, each time they are executed.

FIG. **7** shows a flow chart for a Polite Agent Job **285** embodying the present invention for transmitting data to the Network **700**. The Polite Agent Job **285** first checks (step A) to see whether this is the first time the job has been called by the TCP/IP Polite Agent **280**. If it is the first time the job has been called, the current file position is initialized to the beginning of the file (step B). The file to be transferred is then opened (step C). If the file open is unsuccessful, the Polite Agent Job **285** returns an ERROR flag to the calling TCP/IP Polite Agent **280** which then terminates the Polite Agent Job **285**, removes it from the Polite Agent Queue **286** and marks the job as terminated with error (steps D, E). If the file opens without error, the Polite Agent Job **285** seeks to the current file position in the transferring file and reads the next block of data (steps F, G, H). If no data is left to be read (end of file condition), the Polite Agent Job **285** closes the file and returns a DONE flag to the TCP/IP Polite Agent **280** which terminates the job and marks the Polite Agent Job **285** as completed successfully (steps I, J). If data was successfully read from the transferring file, the Polite Agent Job **285** transmits the name of the file, file position and file block contents to the Network **700** via the TCP/IP Protocol Stack **290** (steps I, K). The Polite Agent Job **285** then updates the current file position and stores it on persistent storage, such as the Local Computer's Mass Storage Device **516** (step L). Finally, the Polite Agent Job **285** closes the transfer file and returns a flag asking the TCP/IP Polite Agent **280** to again schedule and execute this job again.

It will be obvious to one of ordinary skill in the art how to modify the above type of Polite Agent Job **285** for other types of tasks, such as receiving files. The TCP/IP Polite Agent **280** is capable of transferring any type of information file including, executable code, digitized audio or video, and text, for a variety of types of content such as advertisements, news, or weather, etc. The information file transmitted by the

ported by the platform, or, alternatively, any block of data such as a database record.

In one variation of the present invention, the Polite Agent Job **285** receives as an input the current communication line utilization and a line utilization threshold value. The Polite Agent Job **285** uses this threshold to calibrate its operation by calculating how many network packets, bytes, or other units of data may be transferred without increasing the load beyond the line utilization threshold value.

One of the most common types of Polite Agent Jobs **285**, is a file-transfer task. Each time the file-transfer task is run it will send (or receive) a small portion of the file, typically between 0.5–1K.

Part of the information collected by the present invention may be sensitive in nature, for example, a user's responses to advertising contests may need to be authenticated to prevent fraudulent responses. The system will use known methods such as public key encryption and digital signatures in order to authenticate the information sent by the Local Computer **500**. These methods are well known to those in the art.

The technology of the Polite Agent is general and may be applied in other systems and to the transmission of other types of information content such as news and weather, sports scores and stock quotes, software support information and executable updates, and airlines reservations information.

4. Locally Stored Advertisement Database

FIG. **10** shows a variation of the present invention in which a plurality of Advertisements **50** are stored locally to the Local Computer **500** in a Local Advertisement Database **550** on the Local Storage Device **540** or LAN. In this embodiment, the Advertisements **50** are not down-loaded from the Advertising System Server **600**, but rather are selected from the Local Advertisement Database **550**. The Advertisements Feeder **250** selects Advertisements **50** for presentation on the Local Computer **500** from the Local Advertisement Database **550**. In this embodiment, the Advertisements Feeder **250** includes the selection functionality described for the Network Job **725** above. Selected Advertisements **50** are loaded into the User Preference and Advertisement Database **230** for display as described above.

It is understood that various other modifications will be apparent to and can be readily made by those skilled in the art without departing from the scope and spirit of the present invention. Accordingly, it is not intended that the scope of the claims be limited to the description or illustrations set forth herein, but rather that the claims be construed as encompassing all features of patentable novelty that reside in the present invention, including all features that would be treated as equivalents by those skilled in the art.

What is claimed is:

1. A method of presenting individualized advertisement items on a computer, said individualized advertisement items selected from a database of advertisement items stored on a network, said method comprising the steps of:

(a) inputting user priorities on the computer from a predefined set of general categories of advertising information;

(b) selecting a plurality of advertisement items for presentation from the database of advertisement items, said database of advertisement items containing at least one category of advertising information associated with each advertisement item, said selection based on said user priorities and said associated advertising category;

(c) downloading said plurality of selected advertisement on said network, said downloading of said set of selected advertisement items performed using the process comprising the steps of:

(i) monitoring the communication line utilization rate for a communications link coupling the computer and network;

(ii) determining whether to transmit data in the current iteration based on said monitored line utilization rates;

(iii) if said determination of step (ii) indicates data may be transmitted, transmitting a portion of the remaining advertisement item between the network and the computer;

(iv) tracking the remaining untransmitted portion of the advertisement item, said tracking providing tracking information for any remaining untransmitted portion of the advertisement item;

(v) storing said tracking information indicating the last transmitted portion of said advertisement item, said tracking information being stored in persistent memory;

(vi) repeating steps (i)–(v) until the advertisement item has been transferred, whereby said downloading of said advertisement item continues from the last transmitted portion of said advertisement item after any intervening breaks in said communications link or breaks in the availability of said computer, and

(d) presenting at least one of said plurality of selected advertisement items on said computer, said at least one presented advertisement item being periodically varied from said plurality of selected advertisement items.

2. The method of presenting individualized advertisement items of claim **1** wherein said presentation technique of step (d) is selected from the group consisting of screen-saver display, background wallpaper display, cursor display, fixed screen location display, relative screen location displayed and audio messages played at various times.

3. The method of presenting individualized advertisement items of claim **1** further comprising the step of monitoring the communications link until the communications link coupling the computer and network has been established.

4. A method of presenting information items on a computer, said information items selected from a remote database of information items on a remote network, said method comprising the steps of:

(a) inputting user priorities on the computer from a predefined set of general information categories;

(b) selecting a plurality of information items for presentation from the remote database of information items, said database containing at least one information category associated with each information item, said selection based on said input user priorities and said associated information category;

(c) downloading the plurality of selected information items from the remote network to the computer, said downloading of the plurality of selected information items using the process comprising:

(i) monitoring a current communication line utilization rate for a communications link coupling the computer and the remote network;

(ii) determining whether to transmit data in the current iteration based on said monitored communications line utilization rate;

(iii) if said determination of step (ii) indicates data may be transmitted, transmitting a portion of the remaining information item between the remote network

(iv) tracking the remaining untransmitted portion of the information item, said tracking providing tracking information for any remaining untransmitted portion of the information item;

(v) storing said tracking information indicating the last transmitted portion of said information item, said tracking information being stored in persistent memory;

(vi) repeating steps (i)–(v) until the information item has been transferred, whereby said downloading of said information item continues from the last transmitted portion of said information item after any intervening breaks in said communications link or breaks in the availability of said computer; and

(d) presenting at least one of said plurality of selected information items on said computer, said at least one presented information item being periodically varied from said plurality of selected information items.

5. The method of presenting individualized information items of claim **4** wherein said presentation technique of step (d) is selected from the group consisting of screen-saver display, background wallpaper display, cursor display, fixed screen location display, relative screen location display, and audio messages played at various times.

6. The method of presenting individualized information items of claim **4** further comprising the steps of:

(e) collecting feedback information regarding the presented information items; and

(f) uploading said feedback information to said remote network.

7. A process for transmitting a file of data between a client computer and a server computer coupled by a communications link on a computer network, said process comprising the steps of:

(a) monitoring the communication line utilization rate for said communications link;

(b) comparing said communication line utilization to preestablished values;

(c) calibrating the amount of data to be transmitted based on said comparison of said communication line utilization to said preestablished values;

(d) transmitting said calibrated amount of data;

(e) tracking the remaining untransmitted portion of said file, said tracking providing tracking information for any remaining untransmitted portion of the file;

(f) storing said tracking information indicating the last transmitted portion of said file, said tracking information being stored in persistent memory; and

(g) repeating steps (a)–(f) until the file has been transferred,

whereby said process for transferring a file continues transmitting from the last transmitted portion of said file after any intervening breaks in said communications link or breaks in the availability of said client computer.

8. The process of claim **7** further comprising the step of:

monitoring the communications link until the communications link coupling the first computer and second computer has been established.

9. The process of claim **7** wherein said file of data comprises executable code.

10. The process of claim **7** wherein said calibration of step (c) comprises the step of calculating the amount of data to be transferred without increasing the communications line utilization rate above a preestablished threshold value.

11. The process of claim **7** wherein said step (a) of monitoring the communications line utilization comprises

12. The process of transmitting a file of data of claim **7** wherein a plurality of categories of programs are transmitting or receiving data on said communications link including at least one category of program implementing said process of transmitting a file of data, said monitoring of step (a) providing line utilization rate information for said plurality of categories of programs, said calibration of step (c) taking into account said monitored line utilization for said at least one category of program implementing said process of transmitting a file of data.

13. A process for transmitting a file of data between a client computer and a server computer coupled by a communications link on a computer network, said process comprising the steps of:

(a) monitoring the communication line utilization rate for said communications link;

(b) utilizing said monitored line utilization rate to determine whether to transmit data in the current iteration, and to calculate the amount of data to be transmitted in the current iteration;

(c) if said determination of step (b) indicates data should be transmitted in the current iteration, transmitting the amount of data calculated in step (b);

(d) tracking the remaining untransmitted portion of the file, said tracking providing tracking information for any remaining untransmitted portion of the file;

(e) storing said tracking information indicating the last transmitted portion of said file, said tracking information being stored in persistent memory; and

(f) repeating steps (a)–(e) for a new iteration until the file has been transferred,

whereby said process for transferring said file utilizes said line utilization rate as a feedback mechanism for controlling the transfer of data via said communications link, said process further continuing transmission from the last transmitted portion of said file after any intervening breaks in said communications link or breaks in the availability of said client computer.

14. A process for transmitting a file between a server computer and a local computer, said local computer coupled to server computer by a communications link on a computer network, said process comprising the steps of:

(a) monitoring the communications link to determine if the communications link coupling the local computer and server computer has been established;

(b) determining a communication line utilization rate for the communications link;

(c) if said communications link has been established, transmitting a portion of data from the remaining file between the network and the local computer, the amount of data in said portion being a function of said communication line utilization rate and one or more preestablished values;

(d) tracking the remaining untransmitted portion of the file, said tracking providing tracking information for any remaining untransmitted portion of the file;

(e) storing said tracking information indicating the last transmitted portion of said file, said tracking information being stored in persistent memory; and

(f) repeating steps (a)–(e) until the file has been transferred,

whereby said process for transferring said file continues transmitting from the last transmitted portion of said file after any intervening breaks in said communications link or breaks in the availability of said local computer.