IN THE UNITED STATES DISTRICT COURT
FOR THE DISTRICT OF DELAWARE

ATTENTIVE MOBILE INC.,	)	
	)	
Plaintiff,	)	
	)	C.A. No. 23-87-CJB
v.	)	
	)	
STODGE INC. d/b/a POSTSCRIPT,	)	
	)	
Defendant.	)	

STODGE INC. D/B/A POSTSCRIPT'S INITIAL INVALIDITY CONTENTIONS

OF COUNSEL:

Gene Novikov
Hannah Jiam
Raghav Krishnapriyan
Joyce C. Li
MORRISON FOERSTER
425 Market Street
San Francisco, CA 94105-2482
Tel: (415) 268-7000

David E. Moore (#3983)
Bindu A. Palapura (#5370)
Andrew L. Brown (#6766)
POTTER ANDERSON & CORROON LLP
Hercules Plaza, 6th Floor
1313 N. Market Street
Wilmington, DE 19801
Tel: (302) 984-6000
dmoore@potteranderson.com
bpalapura@potteranderson.com
abrown@potteranderson.com

Attorneys for Defendant Stodge Inc. d/b/a Postscript.

Dated: July 27, 2023
10941066 / 22870.00001

I. INTRODUCTION

Pursuant to the Court's Scheduling Order (D.I. 20), Defendant Stodge Inc. d/b/a Postscript ("Stodge" or "Postscript") hereby provides its Initial Invalidity Contentions in response to Attentive Mobile Inc.'s ("Attentive") Preliminary Infringement Contentions, served June 28, 2023. Specifically, Postscript addresses the following claims asserted by Attentive (the "Asserted Claims" of the "Asserted Patents"):

- U.S. Patent No. 11,416,887 (the "'887 patent"), claims 1-20
- U.S. Patent No. 11,416,897 (the "'897 patent"), claims 15-30
- U.S. Patent No. 11,553,074 (the "'074 patent"), claims 1-30

(Preliminary Infringement Contentions at 2-3.)

Discovery and Postscript's investigation continue. These disclosures are based on Postscript's current knowledge and understanding of the Asserted Patents, Attentive's infringement theories, the prior art, and other facts and information available at this early stage of the case. Postscript reserves the right to amend, modify, and/or supplement these Contentions based on new or different information learned in discovery or in view of Attentive's assertions in this case.

The parties have not yet engaged in claim construction disclosures or briefing and the Court has not yet construed the Asserted Claims. Accordingly, Postscript reserves the right to amend, modify, and/or supplement these Contentions in view of any claim construction order. Postscript further reserves the right to amend, modify, or supplement these Contentions in response to any proposed claim construction or alleged supporting evidence offered by Attentive, any report from any expert witness for Attentive regarding claim construction, any claim construction briefing filed by Attentive, and any position taken by Attentive concerning claim

construction.

To the extent that these Contentions reflect constructions of claim terms that may be consistent with or implicit in Attentive's Preliminary Infringement Contentions, no inference is intended nor should be drawn that Postscript agrees with such claim constructions. These Contentions are not intended to reflect Postscript's claim construction positions, which will be disclosed in due course in accordance with this Court's Scheduling Order. Postscript's Contentions, including the attached claim charts, may reflect alternative positions as to claim construction and claim scope.

The accompanying claim charts list specific examples of prior art that included and/or disclosed, either expressly or inherently, each limitation of the identified claims and/or made obvious each limitation of the identified claims. Postscript has endeavored to identify relevant portions and/or features of the identified prior art. The identified prior art, however, may contain additional descriptions of or alternative support for the claim limitations. The citations included in each chart are illustrative, not exhaustive. Postscript may rely on un-cited portions or features of the identified prior art, other documents, and fact and expert testimony to provide context or to aid in understanding the identified prior art. Where Postscript cites to a particular figure in a reference, the citation should be understood to encompass the caption and description of the figure and any text relating to the figure. Similarly, where Postscript cites to particular text referring to a figure, the citation should be understood to include the figure and caption as well.

Moreover, as certain prior art references and inventions are described in multiple related patents or publications with similar or identical specifications or disclosures, to the extent Postscript has identified a citation in one reference, Postscript reserves the right to rely on parallel or similar citations in related patents or publications. A person of ordinary skill in the art

("POSA") would read a prior art reference and understand a prior art invention as a whole and in the context of other publications and known technologies. Therefore, to understand and interpret any specific statement or disclosure of a prior art reference or invention, such persons would rely on other information within the reference or invention, along with other publications and known technologies. Postscript reserves the right to establish what was known to a POSA through other publications, products, and/or testimony. Postscript also reserves the right to rely on uncited portions of the prior art references, other publications, and testimony to establish that a POSA would have been motivated to combine certain of the cited references so as to render the claims obvious.

Postscript may also rely on other documents and information, including inventor admissions, concerning the scope of the Asserted Claims, and prior art relevant to the Asserted Claims, referenced in: the Asserted Patents; the patent prosecution histories for the Asserted Patents, and related patents and/or patent applications; any deposition testimony of any inventor of the Asserted Patents; and any papers filed or any evidence produced or submitted by Attentive in connection with this litigation related to the Asserted Patents. In particular, Postscript reserves the right to contend that the Asserted Claims are invalid under 35 U.S.C. § 102(f) in the event that Postscript obtains evidence that the inventors named on the Asserted Patents did not invent (either alone or in conjunction with others) the subject matter claimed in the Asserted Patents.

Postscript's investigation of prior art systems and products is ongoing. Postscript has diligently sought and will continue to diligently seek discovery from Attentive and third parties to demonstrate earlier invention by Attentive and/or third parties and reserves its right to contend that the Asserted Claims are invalid under 35 U.S.C. § 102(g). To date, Attentive has not produced all relevant discovery requested by Postscript regarding, among other things, prior art

systems and products; therefore, Postscript reserves the right to raise any such or further deficiencies with Attentive and/or the Court as needed and further reserves the right to amend, modify, and/or supplement its Contentions. Postscript's further investigation and/or subsequent discovery from Attentive or third parties with knowledge regarding prior art systems and products may reveal additional relevant prior art systems and products and/or further information regarding the systems and products in these Contentions. Postscript reserves the right to amend, modify, and/or supplement these Contentions, based on further and subsequent investigation and discovery.

Based on Postscript's present understanding of the Asserted Claims and/or Attentive's apparent construction of the claims, as set forth in Attentive's Infringement Contentions, Postscript has identified grounds for invalidating Asserted Claims based on indefiniteness, or written description under 35 U.S.C. § 112. Postscript is not adopting Attentive's apparent constructions, nor is Postscript agreeing that any of Attentive's apparent constructions are correct. Postscript reserves all rights to advance claim construction positions different from Attentive's apparent constructions. Moreover, Attentive's deficient Infringement Contentions fail to provide Postscript with adequate notice as to Attentive's infringement theories, which is the subject of a separate dispute between the parties. Postscript thus reserves the right to amend, modify, and/or supplement these Contentions to further identify bases for invalidity under 35 U.S.C. § 112.

II. PRIORITY DATE OF THE ASSERTED PATENTS

All of the Asserted Patents are in the same patent family and, as such, all derive from the same provisional application (62/511,413, the "Provisional Application") filed May 26, 2017, and subsequent non-provisional application (15/986,569, the "'569 Application") filed May 22, 2018. Specifically, the '887 patent issued from Application No. 17/669,114 filed February 10,

2022 (the "'114 Application"), which is a continuation of Application No. 17/569,265 filed January 5, 2022 (the "'265 Application), which is a continuation of Application No. 17/496,590 filed October 7, 2021 (the "'590 Application"), which is a continuation of the '569 Application. The '897 patent issued from the '265 Application. The '074 patent issued from the '590 Application.

Attentive asserts that "[e]ach Asserted Patent is entitled to a priority date of at least May 26, 2017, the filing date of the Provisional Application." (Attentive's Resp. & Obj. to Postscript's First Set of Interrog., Resp. to Interrog. No. 6.) To the contrary, a patent is presumed to ***not*** be entitled to the priority date of its provisional application. *Dynamic Drinkware, LLC v. Nat'l Graphics, Inc.*, 800 F.3d 1375, 1380 (Fed. Cir. 2015). Attentive bears the burden of proving that each of the Asserted Claims are entitled to claim the benefit of the filing date of the Provisional Application by showing that "the disclosure filed as the provisional application adequately provides (1) a written description of the subject matter of the claim(s) at issue in the later filed nonprovisional application, and (2) an enabling disclosure to permit one of ordinary skill in the art to make and use the claimed invention in the later filed nonprovisional application without undue experimentation." *Id.* at 1380-81 (quoting MPEP § 211.05(I)(A) (2014)). Attentive has failed to provide any basis for a claim to priority earlier than May 22, 2018, the date the first non-provisional application was filed.

Regardless, Attentive cannot meet its burden because the Provisional Application does not adequately describe or enable each limitation of the Asserted Claims. The Provisional Application is a 9-page document that discloses, at a high level, a "Two-Tap" system for subscribing to or purchasing a product or service via text message, using existing deeplink technology. This is illustrated in Figure 1 of the Provisional Application:

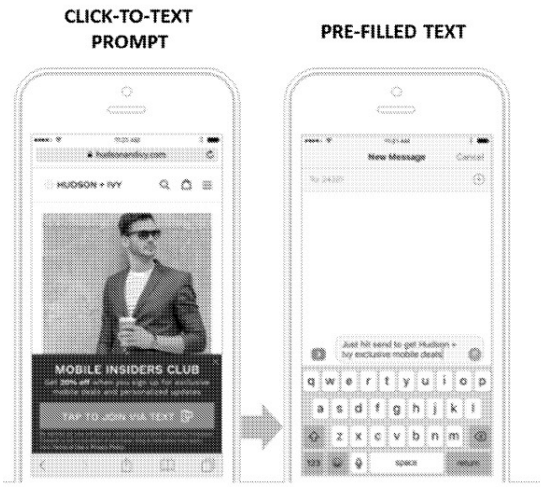

FIGURE 1

The Provisional Application fails to adequately describe or enable at least the following limitations of the Asserted Claims:

- Limitations related the use of an "integration tag," including:
    - "code including instructions configured to cause the click-to-text server to: send, to a client server, an integration tag" ('887 patent, claims 1-20)
    - "receiving, from at least one web server, an integration tag included in a webpage" ('074 patent, claims 1-7)
    - "code including instructions configured to cause the mobile device to: receive, from at least one web server, an integration tag included in a webpage" ('074 patent, claims 8-15)
- Limitations related to populating a custom text message based on "user data", including:
    - "the second application to automatically populate a custom text message based on the user data" ('897 patent, claims 15-23)
- Limitations related to an identifier associated with a product or service presented via a webpage, including:
    - "sending, from the mobile device, to the at least one web server, and in response to the integration tag executing . . . a request to retrieve an identifier associated with at least one of a product or service presented via the webpage" ('074 patent, claims 1-7; *see also id.* claims 8-15)

- "receiving, at the mobile device, from the at least one web server, and in response to sending the mobile device identifier and the request to retrieve the identifier, a first signal causing a frame to be displayed with the webpage via the web browser application, the frame including a promotional message associated with joining a subscription list" ('074 patent, claims 1-7; *see also id.* claims 8-15)

- "receiving, from the mobile device and in response to the integration tag executing at the mobile device . . . a request to retrieve an identifier associated with at least one of a product or a service presented via the webpage" ('074 patent, claims 16-22; *see also id.* claims 23-30)

- "sending, to the mobile device and in response to receiving the mobile device identifier and the request to retrieve the identifier, a first signal configured to cause a frame to be displayed with the webpage via the web browser application, the frame including a promotional message associated with joining a subscription list" ('074 patent, claims 16-22; *see also id.* claims 23-30)

- Limitations related to the click-to-text server defining a uniform resource identifier (URI), including:

  - "including instructions configured to cause the click-to-text server to: . . . define and send a uniform resource identifier (URI) to the mobile device . . . , the URI deeplinking to a messaging application" ('887 patent, claims 1-20)

  - "defining, at the least one server, a uniform resource identifier (URI) that deeplinks to a text messaging application" ('897 patent, claims 24-30)

- Limitations related to the custom text message including an identifier associated with at least one of the webpage or the user data, including:

  - "define and send a uniform resource identifier (URI) to the mobile device in response to the mobile device executing the integration tag, the URI deeplinking to a messaging application different from the first application and configured to cause the mobile device to … automatically populate a custom message in the messaging application that includes an address associated with the click-to-text server and a message body that includes an identifier associated with at least one of the webpage or the user data" ('887 patent, claims 1-20)

- Limitations related to the mobile device sending the text message to the click-to-text server, including:

  - "code including instructions configured to cause the click-to-text server to: . . . define and send a uniform resource identifier (URI) to the mobile device . . . configured to cause the mobile device to . . . automatically populate a custom

message in the messaging application that includes an address associated with the click-to-text server . . . such that, upon detecting a single user interaction with a send button of the messaging application, the mobile device sends the custom message to the click-to-text server; [and] receive the custom message at the click-to-text server" ('887 patent, claims 1-20)

- Limitations related to the click-to-text server not charging a fee to a user of the mobile device, including:
    - "the mobile device is enrolled in the promotion without the click-to-text server charging a fee to a user of the mobile device" ('887 patent, claim 2)
    - "the installment of the subscription is received via text message without an entity associated with the at least one webserver charging a fee" ('074 patent, claim 7)
    - "the code . . . comprising code to cause the mobile device to receive an installment of a free subscription via text message" ('074 patent, claim 14)
    - "the installment of the subscription is delivered via text message to the mobile device without a provider of the subscription service charging a user of the mobile device any fee" ('074 patent, claims 20, 27)
- Limitations related to authenticating or identifying the mobile device or user of the mobile device, including:
    - "code . . . comprising instructions to cause the click-to-text server to: authenticate [the mobile device]/[a user of the mobile device]" ('887 patent, claims 3, 4, 6, 7, 9, 10; '897 patent, claim 19;
    - "ascertaining, based on the user data, at least one of an identity of at the mobile device or an identity of the user associated with the mobile device" ('897 patent, claim 25)
    - "identifying at least one of the mobile device or the user of the mobile device based on the user data, the URI defined based on an identity of the at least one of the mobile device or the user of the mobile device" ('897 patent, claim 27)
- Limitations related to the sending a promotional message to the mobile device, including:
    - "code . . . comprising instructions to cause the click-to-text server to: . . . send the promotional message to the mobile device" ('887 patent, claim 4)
- Limitations related to determining whether the user of the mobile device is a new subscriber or not, including:
    - "code . . . comprising instructions to cause the click-to-text server to

determine that the user [of the] mobile device is a new subscriber, the mobile device enrolled in the promotion based on the mobile device being a new subscriber" ('887 patent, claim 8)

- "the mobile device is enrolled in the promotion based on a determination, by the click-to-text server that the mobile device is not an existing subscriber to the promotion based on the identifier" ('887 patent, claim 19)
- "code to cause the processor to: determine whether the mobile device has previously subscribed to the text messaging subscription service, the installment of the text messaging subscription service delivered based on determining that the mobile device has not previously subscribed to the text messaging subscription service" ('897 patent, claim 21)
- "code to cause the processor to: determine whether the mobile device has previously subscribed to the text messaging subscription service; and send a message to the mobile device indicating that the mobile device is already subscribed to the text messaging subscription service in response to determining that the mobile device has previously subscribed to the text messaging subscription service" ('897 patent, claim 22)
- "determining that the mobile device has not previously subscribed to the text messaging subscription service, the installment of the text messaging subscription delivered based on determining that the mobile device has not previously requested delivery of the text messaging subscription" ('897 patent, claim 29)
- "determining that the mobile device has previously subscribed to the text messaging subscription service; and sending a message to the mobile device indicating that the mobile device is already subscribed to the text messaging subscription service" ('897 patent, claim 30)

- Limitations related to including customized content in the text message that is associated with user data, including:
  - "the custom text message including customized content that is associated with the cookie" ('897 patent, claim 26)

III. PRIOR ART

Postscript contends that the Asserted Claims are invalid under 35 U.S.C. §§ 102 and/or 103 based on the following prior art references and systems. Postscript reserves the right to supplement this list as it learns in the course of discovery of other prior art that would anticipate and/or render obvious the Asserted Claims.

A. Prior Art Patent Publications

The following patent publications constitute prior art to the Asserted Patents regardless of whether the Asserted Patents can claim priority to the Provisional Application. All of these publications are prior art under 35 U.S.C. § 102(a)(2) because they are issued patents or patent applications that name another inventor and were effectively filed before May 26, 2017, the date the Provisional Application was filed. All of these publications except Sogani are also prior art under § 102(a)(1) because they issued or published before May 26, 2017.[1]

Ref. No.	Publication No.	Short Name	Filing Date	Publication Date	Latest Priority Date
1	US 2015/0178784 A1	Oliver	Dec. 19, 2014	June 25, 2015	Dec. 19, 2014
2	US 8,532,283 B1	Haggerty	May 14, 2012	Sept. 10, 2013	May 14, 2012
4	US 2017/0192766 A1	Sogani	Dec. 31, 2015	Jul. 6, 2017	Dec. 31, 2015
5	US 2013/0111328 Al	Khanna	Oct. 31, 2012	May 2, 2013	Oct. 31, 2012
10	US 2010/0131373 A1	Kubasov	Nov. 25, 2008	May 27, 2010	Nov. 25, 2008
11	US 8,015,615	Agrawal	June 30, 2005	Sept. 6, 2010	June 30, 2015
12	US 2014/0379482 Al	Demsey	June 20, 2013	Dec. 25, 2014	June 20, 2013
13	US 5,913,040	Rakavy	Aug. 22, 1995	June 15, 1999	Aug. 22, 1995
14	US 2016/0142858 A1	Molinet	Nov. 6, 2015	May 19, 2016	Nov. 6, 2015
16	US 2009/0247140 A1	Gupta	Mar. 31, 2008	Oct. 1, 2009	Mar. 31, 2008

B. Prior Art Non-Patent Publications

The following non-patent publications also constitute prior art to the Asserted Patents regardless of whether the Asserted Patents can claim priority to the Provisional Application. Specifically, the publications are prior art under § 102(a)(1) because they are printed publications published before May 26, 2017.

[1] Sogani, which published on July 6, 2017, is also prior art under § 102(a)(1) if the Asserted Patents cannot claim priority to the Provisional Application.

Ref. No.	Publication	Short Name	Publication Date
3	Erik Wilde and Antti Vaha-Sipila, *URI Scheme for Global System for Mobile Communications (GSM) Short Message Service (SMS)*, RFC 5724 (Jan. 2010)	SMS URI Standard	Jan. 2010
15	Gregory Cristal, *Ad Serving Technology, Understand the marketing revelation that commercialized the internet*, ISBN: 1484867572 (2014)	Ad Serving Technology	2014

C. Prior Art Systems

The following systems also constitute prior art to the Asserted Patents regardless of whether the Asserted Patents can claim priority to the Provisional Application. All of these systems are prior art under § 102(a)(1) because they were in public use, on sale, or otherwise available to the public before May 26, 2017. Branch was in public use, on sale, or otherwise available to the public by at least July 5, 2016. (*See, e.g.*, https://www.branch.io/resources/blog/using-branch-email-links-to-trigger-sms-referrals/.) Twitter and relevant features like Web Intents were in public use, on sale, or otherwise available to the public by at least April 2, 2011. (*See, e.g.*, https://web.archive.org/web/20110402075727/http://dev.twitter.com/pages/intents.) Protexting was in public use, on sale, or otherwise available to the public by at least October 12, 2016. (*See, e.g.*, https://web.archive.org/web/20161012180240/https:/www.protexting.com/qr-code-generator.html.) Google AdWords was in public use, on sale, or otherwise available to the public by at least June 17, 2016. (*See, e.g.*, https://searchengineland.com/google-adwords-testing-click-sms-ad-extension-252214.) Zipwhip was in public use, on sale, or otherwise available to the public by at least December 20, 2016. (*See, e.g.*, https://web.archive.org/web/20161220083256/https://www.zipwhip.com/clicktotext/.) Google AdSense was in public use, on sale, or otherwise available to the public by at least June 18, 2003.

(*See, e.g.*, http://googlepress.blogspot.com/2003/06/google-expands-advertising-monetization.html.)

Ref. No.	Name of System	Date of Offer/Use/Release	Identity of Provider
6	Branch	July 5, 2016 or earlier	Branch Metrics, Inc. d/b/a Branch
7	Twitter	April 2, 2011 or earlier	Twitter Inc.
8	Protexting	Oct. 12, 2016 or earlier	ProTexting LLC
9	Google AdWords	June 17, 2016 or earlier	Google LLC
17	Zipwhip	Dec. 20, 2016 or earlier	Zipwhip
18	Google AdSense	June 18, 2003 or earlier	Google LLC

D. Prior Art if the Asserted Patents Cannot Claim Priority to the Provisional Application

The Attentive BustedTees System is prior art to the Asserted Patents if they cannot claim priority to the Provisional Application. The Attentive BustedTees System is prior art under § 102(a)(1) and not subject to the exceptions under § 102(b)(1) because, by Attentive's assertion (*see* Pl.'s Obj. & Resp. to Def.'s First Set of Interrogatories, Resp. to Interrogatory No. 3), the system was in public use, on sale, or otherwise available to the public over a year before May 22, 2018, the filing date of the first non-provisional application to which the Asserted Patents claim priority (the '569 Application).

Ref. No.	Name of System	Date of Offer/Use/Release	Identity of Provider
TBD	Attentive's commercial embodiment implemented on a website associated with BustedTees ("Attentive BustedTees System")	On or about April 28, 2017	Attentive

IV. INVALIDITY GROUNDS

A. Unpatentable Subject Matter

Postscript contends that the Asserted Claims are invalid under 35 U.S.C. § 101 for the reasons set forth in: Postscript's briefing in support of its Motion to Dismiss Pursuant to Fed. R. Civ. P. 12(b)(6), D.I. 10, 22; 317 Labs, Inc. d/b/a Emotive's ("Emotive") briefing in support of its Motion to Dismiss Attentive Mobile Inc.'s Complaint Pursuant to Fed. R. Civ. P. 12(b)(6) and 35 U.S.C. § 101, *Attentive Mobile, Inc. v. 317 Labs, Inc. d/b/a Emotive*, C.A. No. 1:22-cv-1163-CFC-CJB, D.I. 10, 20; and Postscript and Emotive's arguments at the joint hearing on those motions (*see* July 14, 2023 Minute Entry)—all of which are incorporated by reference herein.

As set forth in more detail in the incorporated briefing, the Asserted Claims are invalid under § 101 at least because they are directed to the abstract idea of enrolling customers in promotions using a prefilled and preaddressed request and claim only a conventional arrangement of generic components bereft of any cognizable inventive concept, as further evident in view of the prior art cited in these contentions. This is clear from Attentive's articulation of its purported invention:

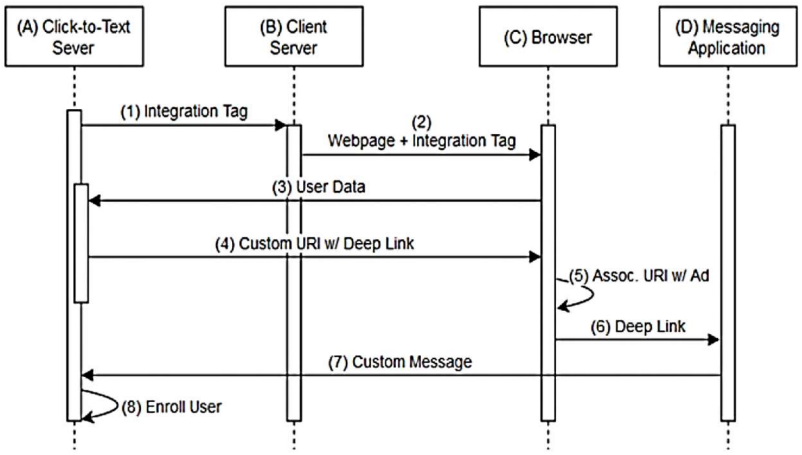

(D.I. 16 at 1.)

> The system achieved this result as shown in the sequence diagram above. To start, a "click-to-text server" (A) send an "integration tag" (1) to a client server (B). The client server (B) embeds the integration tag into a webpage, which it serves (2) to a mobile device application, such as a browser (C). The browser (C) responds to the integration tag by automatically sending its user's data (3) to the click-to-text server (A). The click-to-text server (A) uses that received data to create a custom Uniform Resource Location ("URI") that deep links to the mobile device's messaging application (D) with a custom message that includes the click-to-text server's address and an identifier for the user or the webpage, and it communicates that custom URI (4) back to the browser (C). The browser (C) associates the URI with a promotional message that it displays to the user (5). If the user taps on the promotional message, the browser (C) uses the URI to open a messaging application with the custom message. The custom message is automatically addressed to the click-to-text server, as indicated by the URI (6). If the user sends the message (7) to the click-to-text server (A), the mobile device is enrolled in the promotion (8).

(*Id.* at 2-3.)

Although Attentive attempts to elevate the purported invention with jargon like "click-to-text se[r]ver," "Integration Tag," and "Custom URI w/ Deep Link," this description boils down to: causing a mobile device to send user data to a server (steps 1-3); prefilling a text message using standard linking protocol (steps 4-6); and receiving a prefilled text message and enrolling the user in a promotion (steps 7 and 8)—all of which was conventional and well known before the earliest possible priority date of the Asserted Patents.

Moreover, the particular aspects Attentive relies in its description of the invention do not even appear across the asserted claims. As shown by the following illustrative examples, Attentive adds several elements to its articulation of the purported invention that are not in fact claimed. First, Attentive asserts that, in the claimed invention, "a 'click-to-text server (A) ***sends an 'integration tag' (1) to a client server (B)***" and ***"[t]he client server (B) embeds the integration tag into a webpage***, which it serves (2) to a mobile device application, such as a browser (C)." (D.I. 16 at 2-3 (emphasis added).) But claim 15 of the '897 patent only requires

"***send[ing], from at least one server and to a mobile device requesting and/or a webpage***, means for displaying an invitation to subscribe to a text messaging subscription service via a first application"—without requiring a "click-to-text server" to send an "integration tag" to a "client server" and the "client server" to "embed[] the integration tag into a webpage," which is then served to the mobile device.

Second, Attentive asserts that "[t]he click-to-text server (A) uses [the user data sent by the browser] to create a custom Uniform Resource Location ("URI") . . . ." (D.I. 16 at 3.) But claim 1 of the '887 patent only requires "an identifier associated with at least ***one of the webpage <u>or</u> the user data***."

Third, Attentive asserts that claimed invention involves deep linking to a mobile device's messaging application with "a custom message that ***includes the click-to-text server's address and an identifier for the user or the webpage***." (D.I. 16 at 3 (emphasis added).) But claim 15 of the '897 patent only requires "a custom text message ***based on the user data***."

Fourth, Attentive asserts that the "custom message" "includes the ***click-to-text server's*** address and ***an identifier for the user or the webpage***." (D.I. 16 at 3 (emphasis added).) But claim 15 of the '074 patent only requires "a text message with a pre-populated phone number and a pre-populated message body containing a request to join the subscription list . . . ." It does not require the phone number to be the "click-to-text server's address"; nor does it require the message to have "an identifier for the user or the webpage."

Fifth, Attentive asserts that the claimed invention requires "[t]he browser (C) [to] ***associate[] the URI with*** a promotional message that it displays to the user." (D.I. 16 at 3 (emphasis added).) Neither claim 15 of the '897 patent nor claim 1 of the '887 patent require the URI to be associated "with a promotional message that it displays to the user."

Lastly, Attentive asserts that the browser will use the URI to open a messaging application with a custom message "[i]f the user taps on the promotional message." (D.I. 16 at 3.) But claim 15 of the '074 patent states that the text message can be generated "in response to ***at least one of*** (1) integration tag executing ***or*** (2) the indication of the first user interaction [e.g., the user tapping on the promotional message]."

B. Anticipation

Postscript contends that at least the Asserted Claims identified in Table 1 below are invalid under 35 U.S.C. § 102 as being anticipated by the prior art in that table. With the exception of the Attentive BustedTees System, Postscript provides an exemplary claim chart for each Asserted Patent with citations illustrating how the prior art expressly or inherently discloses every element of the Asserted Claims identified in Table 1. Postscript reserves the right to supplement its contentions based on additional discovery, including discovery from the provider of the identified prior art systems.

At this time, Postscript lacks sufficient information regarding the Attentive BustedTees System to provide claim charts for that system. The Attentive BustedTees System refers to the system described in Attentive's response to Postscript's Interrogatory No. 3. Attentive states: "On or about April 28, 2017 the first commercial embodiment of the claimed inventions was implemented on the Internet on a website associated with BustedTees." As detailed above, the Attentive BustedTees System is prior art to the Asserted Claims unless Attentive proves that those claims are entitled to claim priority to the Provisional Application. Moreover, if the Attentive BustedTees System was in fact an "embodiment of the claimed inventions," the Asserted Claims are invalid under § 102 as anticipated by that system. Attentive has not provided any additional information about the BustedTees System. Although Attentive states that it will produce documents in response to Interrogatory No. 3, pursuant to Federal Rule of

Civil Procedure 33(d), it has not yet produced any documents related to the BustedTees System. Postscript thus lacks the information necessary to determine whether and how the Attentive BustedTees System embodies the Asserted Claims. Postscript reserves the right to supplement its contentions regarding the Attentive BustedTees System, including with claim charts, in view of additional information learned during discovery and Attentive's assertions in this case.

Table 1: Anticipation Prior Art

Reference	Exemplary Claim Chart		
	'887 Patent	**'897 Patent**	**'074 Patent**
Branch	A-6 (Claims 1, 3-15, 19, 20)	B-6 (Claims 15-19, 21, 23-28)	C-6 (Claims 1, 3-6, 8, 10-16, 19, 21-23, 26, 28-30)
Attentive BustedTees System	TBD	TBD	TBD

C. Obviousness

Postscript also contends that the Asserted Claims are invalid under 35 U.S.C. § 103 as being obvious in view of the prior art identified in Table 2 below. Postscript provides an exemplary claim chart for each Asserted Patent with citations illustrating how the prior art discloses or renders obvious every element of the Asserted Claims, including in combination with other prior art or the knowledge of a POSA. Postscript reserves the right to supplement its contentions based on additional discovery, including discovery from the provider of the identified prior art systems, and Attentive's assertions in this case.

Table 2: Obviousness Prior Art

Reference	Exemplary Claim Chart		
	'887 Patent	**'897 Patent**	**'074 Patent**
Oliver	A-1	B-1	C-1
Haggerty	A-2	B-2	C-2
SMS URI Standard Chart	A-3	B-3	C-3
Sogani	A-4	B-4	C-4
Khanna	A-5	B-5	C-5

Reference	Exemplary Claim Chart		
	'887 Patent	**'897 Patent**	**'074 Patent**
Branch	A-6	B-6	C-6
Twitter	A-7	B-7	C-7
Protexting	A-8	B-8	C-8
Google AdWords	A-9	B-9	C-9
Kubasov	A-10	B-10	C-10
Agrawal	A-11	B-11	C-11
Demsey	A-12	B-12	C-12
Rakavy	A-13	B-13	N/A
Molinet	A-14	B-14	C-14
Ad Serving Technology	A-15	B-15	N/A
Gupta	A-16	B-16	C-16
Zipwhip	A-17	B-17	C-17
Google AdSense	A-18	B-18	C-18
Attentive BustedTees System	TBD	TBD	TBD

1. Prior Art Combinations

The Asserted Claims are obvious based on one or more combinations of the prior art identified in Table 2 above. With respect to the anticipating prior art systems (identified in Table 1), Postscript contends in the alternative that each of those systems renders the Asserted Claims obvious either alone or in combination with the knowledge of a POSA and/ the other references identified in Table 2.

Postscript identifies the following exemplary combinations based on Groups X-Y defined below. Postscript does not presently identify any exemplary combinations with the Attentive BustedTees System because, as explained above, Postscript lacks the necessary information in Attentive's possession to do so. Postscript reserves the right to identify additional combinations, including combinations with the Attentive BustedTees System, and provide contentions regarding such combinations based on additional information learned during discovery and Attentive's assertions in this case.

- Group X (Oliver, Haggerty, Protexting, Gupta, or Zipwhip) in view of Group Y

(Sogani, Khanna, or Molinet)[2]

- Group X in view of Group Y and/or Group Z (Kubasov, Agrawal, Demsey, or Google AdSense)
- Group X in view of Group Y and/or Group Z, and in further view of: the SMS URI Standard, Ad Serving Technology, Molinet, and/or Rakavy
- Branch in view of Group Y
- Branch in view of Group Y and/or Group Z
- Branch in view of Group Y and/or Group Z, and in further view of: the SMS URI Standard, Ad Serving Technology, Molinet, Rakavy, Oliver, and/or Haggerty
- Twitter in view of Group Y
- Twitter in view of Group Y and/or Group Z
- Twitter in view of Group Y and/or Group Z, and in further view of: Ad Serving Technology, Molinet, Rakavy, Oliver, and/or Haggerty
- Google AdWords in view of Group Y
- Google AdWords in view of Group Y and/or Group Z
- Google AdWords in view of Group Y and/or Group Z, and in further view of: the SMS URI Standard, Ad Serving Technology, Molinet, Rakavy, Oliver, Haggerty, and/or Zipwhip

2. Motivation to Combine and Expectation of Success

A POSA would have been motivated to combine and expected to succeed in combining the teachings of the prior art in Table 2. As Attentive conceded in connection with Postscript

[2] Combinations between groups means any reference in one group may be combined with any reference in the other group. For example, any of Oliver, Haggerty, or Protexting may be combined with any of Sogani, Khanna, or Molinet.

and 317 Labs, Inc. d/b/a Emotive's ("Emotive") motions to dismiss (heard together), the alleged novelty of the Asserted Claims is the "ordered combination of components and interactions," not the components themselves. *See, e.g.*, *Attentive Mobile Inc. v. 317 Labs, Inc. d/b/a Emotive*, C.A. No. 22-1163-CFC (D. Del. Nov. 30, 2022), D.I. 16 at 2. The core components of the Asserted Claims were well known by May 26, 2017, their earliest possible priority date. Indeed, the shared specification of the Asserted Patents and their Provisional Application acknowledge that deep links were known. The specification states, for example, that "known methods" allowed a user to be "redirected" from "viewing a website" on their mobile device to a "vendor's application" (*e.g.*, deep linking). (*See* '887 patent at 1:36-47.) The Provisional Application is even clearer: "A deeplink is a special type of link used in mobile applications that allows the linking of one mobile application to another. Deeplinks are used across Apple and Android operating systems." (*See* Provisional Application ¶ 6.)

Deep links were not only known before 2017 but widely used for a variety of marketing efforts. (*See, e.g.*, https://venturebeat.com/marketing/deep-linkings-big-untapped-potential (Aug. 9, 2015) ("[D]eep links make it easier to move users app-to-app. A classic example: Google Maps not only provides driving times but also offers Ubers, redirecting users right into the Uber app.").) In fact, by the start of 2015, there were "so many companies and investors working on deep linking" that some were concerned the competition would prevent the market from moving towards a unified linking standard and slow the rate of adoption of deep linking technology generally. (*See, e.g.*, https://www.nytimes.com/2015/01/06/technology/tech-companies-look-to-break-down-walls-between-apps.html (Jan. 5, 2015).)

It was also well known before 2017 that deep links could be used for SMS communications, including SMS marketing. The industry standard that defines the syntax for

linking to a pre-populated SMS message was published in January 2010. (*See* SMS URI Standard at 7-8.) And SMS-based marketing had been used long before that. (*See, e.g.*, https://shellypalmer.com/2005/05/nike-id-interactive-billbard-in-times-square/ (2005 Nike campaign that allowed users to submit a custom sneaker design via SMS to be displayed on a billboard in Times Square); https://www.nielsen.com/insights/2008/obamas-text-message-reaches-29-million-and-makes-history (2008 then-Senator Barrack Obama's SMS marketing campaign to announce then-Senator Joe Biden as his presidential running mate).) There was therefore an incentive to experiment with different hardware and software configurations to make SMS marketing more effective and more efficient.

As SMS marketing became more prevalent, companies also strove to ensure that their marketing efforts complied with relevant laws and regulations. In November 2016, the FCC issued an advisory making clear that "text messages sent to cell phones using any automatic telephone dialing system are subject to the Telephone Consumer Protection Act of 1991" and providing guidance on the need to obtain prior express consent of the texted party. (http://docs.fcc.gov/public/attachments/DA-16-1299A1.pdf.) There was therefore an incentive prior to the priority date to develop architectures for SMS marketing that ensured that companies engaged in such marketing had an unambiguous record of user consent.

In view of this background, and by way of example, Postscript addresses the following exemplary combinations. The parties have not yet engaged in expert discovery. Postscript thus reserves the right to supplement its contentions regarding motivation to combine and expectation of success, including with respect to alternative combinations, in view of any expert testimony in this case, as well as other information learned during discovery and Attentive's assertions.

a. Group X

The prior art in Group X (Oliver, Haggerty, Protexting, Gupta, and Zipwhip) teaches the

use of mobile deep linking to send pre-populated text messages. For example, Oliver discloses using a "passive entity" defined to include "images, codes, tags, or any other unique identifiers that may be encoded with uniquely identifying information" that a user can scan with a mobile device to "create an SMS message" wherein "the user simply sends the message to the destination phone number or short code specified in the prepopulated text message." (Oliver ¶¶ 7-8.) The "passive entity" may be, for example, a QR code (*id.* ¶ 7) and can be incorporated into "electronic visual media" on the Internet (*id.* ¶ 34). Haggerty also discloses a system wherein "upon reading the QR code using a smart phone, a pre-populated text message addressed to the destination address with the contents indicated therein is presented to the user, along with a prompt for confirmation for sending the message." (Haggerty at 9:61-10:6.) Moreover, Haggerty teaches that "a link in electronic reading material" can be used instead of a QR code, wherein the "electronic reading material may be a periodical, such as a magazine, downloaded to a subscriber's viewing device." (*Id.* at 10:59-11:15.) ProTexting similarly supports "Mobile QR Codes" so that "when clients scan [the] QR code the phone opens the text editor pre-populates the short code and the keyword automatically, and at that time the subscriber must only hit 'send' to complete the process"—including to "[s]end SMS" messages. (*See* https://web.archive.org/web/20161012180240/https:/www.protexting.com/qr-code-generator.html.) Gupta describes a system that allows a user to click an ad on a mobile device, which may include information specific to the advertising business such as "the phone number, address, or generally any information specific to" that business, to be redirected to an SMS message ("Click to SMS"). (*See, e.g.*, Gupta ¶ 35.) Zipwhip is a system wherein "[w]hen a consumer taps a click-to-text banner or link from their phone, it opens their default messaging app and pre-populates your phone number and a message." (*See*

https://web.archive.org/web/20161220083256/https://www.zipwhip.com/clicktotext/.)

(i) Combined with Group Y

The prior art in Group Y (Sogani and Khanna) also relates to the use of mobile deep links—specifically, in the context of online advertising. For example, Sogani teaches a system wherein a user may select an ad in a web browser on a mobile device; that causes a deep link to be requested; that then causes the application associated with the deep link to open in the state indicated by the deep link (if the application is installed). (*See* Sogani ¶¶ 77-81 & Fig. 6.) Khanna also discloses a system wherein upon selecting an ad in a web browser on a mobile device, a user is deep linked to a particular section of another application relevant to the ad. (*See* Khanna ¶¶ 26-27.)

A POSA would have been motivated to combine the references and systems of Group Y with those of Group X to, for example, better incorporate the specific techniques for using deep links for text message-based customer interactions described in Group X with the more general techniques for using deep links for online advertising described in Group Y. The references of Group Y facilitate more streamlined interactions between a business and its potential customers by allowing a user to deep link on their mobile device from an ad in a web browser to another application. A POSA would have been interested in applying those deep linking systems specifically to text messages—a well-known medium for marketing communications—in order to expand the reach of a business's advertising campaign, and thus would have looked to the SMS-based mobile deep-linking systems described in Group X. This is further supported by the fact that the references themselves purport to provide solutions to improve upon existing mobile marketing techniques. (*See, e.g.*, Oliver ¶¶ 5-6 (noting existing SMS marketing techniques required users to "correctly type both the destination number or short code, as well as the specific verbiage in the body of the SMS message before the message [could] be sent

successfully," which it purported to improve upon by providing a system for "SMS message-based responses that is more streamlined than, and alleviates the potential errors found in, conventional techniques"); Haggerty at 1:19-62 (purporting to improve upon linking technologies that "can be effective in allowing a consumer of advertising to respond immediately to an advertisement and receive information"); https://web.archive.org/web/20161012180240/https:/www.protexting.com/qr-code-generator.html (noting the system can help businesses "promote [their] SMS marketing campaign"); Gupta ¶¶ 2-6 (teaching a system for "providing mobile advertisement actions" in view of the increasing importance of "marketing via mobile devices" as "part of all integrated data communications strategies"); https://web.archive.org/web/20161220083256/https://www.zipwhip.com/clicktotext/ ("You can use click-to-text pretty much anywhere you promote your brand").)

A POSA would have also expected to succeed in combining the teachings of Group Y and Group X at least because both relate to mobile deep linking. Moreover, at least Haggerty explains that other types of links could be used instead of a QR code (Haggerty at 10:59-11:15), which would have suggested to a POSA that the text message-based system described in Haggerty (and similarly in Oliver, Protexting, or Gupta) could be implemented using links from web browser ads as described in Group Y. In addition, Gupta is specifically targeted to a system that redirects users from a mobile advertisement to other mobile actions, including SMS (*e.g.*, Gupta ¶ 20 ("The system may allow advertisers to engage mobile users by providing users with a simple interface for accessing multi-step mobile actions. The mobile advertisement actions may provide the users with a one click interface to a variety of complex mobile actions, such as . . . sending text message . . . .")))—the same work flow described in Group Y.

(ii) Further Combined with Group Z

The prior art in Group Z (Kubasov, Agrawal, Demsey, and Google AdSense) relates to systems for targeted online advertising. For example, Kubasov describes a system for generating "ad tags that are utilized to insert advertisements in web pages" (Kubasov ¶ 11), which can cause ads to be served based on particular "targeting attributes" provided by the webpage publisher (*id.* ¶ 22). Agrawal also describes a system of using ad tags to serve targeted ad content. (*E.g.*, Agrawal at 5:45-63 (further described in U.S. Patent Application No. 10/375,900 incorporated by reference into Agrawal).) Agrawal also explains that the ads may be served based on user data (*see, e.g.*, *id.* at 5:64-6:1, 6:18-29), which can be used to verify whether the ad request is legitimate or illegitimate (for example, triggered by a click-bot) (*see, e.g.*, *id.* at 7:45-8:2). Demsey similarly describes a system of serving targeted ads based on user data—in particular, "historical user data collected across the user's use of a plurality of Internet devices." (Demsey ¶ 9.) Google AdSense is an ad network provided by Google that allows online publishers to monetize their websites by displaying ads served by Google. (*See* https://blog.google/products/ads-commerce/adsense101-passionintoprofit/; https://web.archive.org/web/20170319041918/https://support.google.com/adsense/answer/6242051?hl=en ("The Google AdSense program differs [from other ad networks] in that it delivers Google AdWords ads to your site.").)

A POSA would have been motivated to further combine the teachings of Groups X and Y with those of Group Z to, for example, expand upon the ad network systems described in Group Z by incorporating the deep linking technology described in Groups X and Y—particularly in view of the fact that the references in Group Z teach the use of their systems with mobile devices. (*See, e.g.*, Kubasov ¶ 36; Agrawal at 4:10-16; Demsey ¶ 23; https://web.archive.org/web/20160430182915/https://support.google.com/adsense/answer/63571

80?hl=en (tips for optimizing AdSense for "the mobile Web").) A POSA would have also expected that, since the systems of Group Z were compatible with mobile devices, those systems could be successfully combined with the mobile deep linking technologies described in Groups X and Y. Moreover, a POSA would have also expected to succeed in combining these teachings at least because the systems described in Group Z rely on similar ad networks as those described in Group Y—indeed, Agrawal and Google AdSense (Group Z) and Khanna (Group Y) are from the same entity (Google).

(iii) Further Combined with the SMS URI Standard

The SMS URI Standard sets forth the industry standard uniform resource identifier (URI) scheme for SMS messages. (*See* SMS URI Standard at 1.) An SMS URI allows a user device to "start a program for sending an SMS message." (*Id.* at 6.) The SMS URI can specify the recipients as well as the content (body) of the message. (*Id.* at 7-9.) The Standard makes clear that "simply activating a link with an 'sms' URI SHOULD NOT cause a message to be sent without prior user confirmation." (*Id.* at 5.)

A POSA would have been motivated to further combine the teachings of the SMS URI Standard with those of Group X (alone or in combination with other prior art) because, for example, the SMS URI Standard could be used to facilitate the opening of a user's messaging application with a pre-populated text message—as taught by the references in Group X. Moreover, because the SMS URI Standard requires user confirmation to send a message, a POSA would have been interested in using that Standard to ensure that the systems of Group X complied with the consent requirements of the Telephone Consumer Protection Act of 1991. (*See* http://docs.fcc.gov/public/attachments/DA-16-1299A1.pdf.) And a POSA would have expected to succeed in combining the Standard and the systems of Group X at least because facilitating the opening of a user's messaging application with a pre-populated text message is

one of the primary uses of the SMS URI scheme taught by the Standard. (*See* SMS URI Standard at 9.) Indeed, at least Oliver expressly teaches use of an SMS URI syntax analogous to that taught by the Standard. (*See, e.g.*, Oliver ¶¶ 27-28 ("smsto: 543-21: This is where the message goes and ID=### info etc. To receive your reward TAP SEND!"); SMS URI Standard at 10 ("sms:[phone number]?body=hello%20there").)

(iv) Further Combined with Ad Serving Technology

Ad Serving Technology provides additional detail regarding the use of ad tags, including regarding the use of JavaScript. (*See, e.g.*, Ad Serving Technology at 54.)

A POSA would have been motivated to further combine the teachings of Ad Serving Technology with those of Groups Y and/or Z (alone or in combination with other prior art) because, for example, they all relate to systems for online advertising; a POSA seeking more detailed information about how to implement an online advertising system (such as those described in Groups Y and Z) would turn to Ad Serving Technology. A POSA would also expect to succeed in combining the teachings of these references because they all describe features that can be implemented in an ad network system. Moreover, both the references in Group Z and Ad Serving Technology specifically address the use of ad tags. And at least Agrawal in Group Z also teaches the use of Javascript for ad tags (*see* Agrawal at 3:52-55 (referring to instructions embedded in a web page)), which is consistent with the implementation instructions provided in Ad Serving Technology.

(v) Further Combined with Molinet

Molinet teaches a system for using deep links to take a user to a location within an application on a mobile device. (*See* Molinet ¶¶ 3, 23-24.) Molinet explains that this could be used, for example, to direct a user to "a review page for a local restaurant" in a "crowd-sourced review application" or to "set a certain referral bonus for a particular user account" in a "e-

commerce application." (*Id.* ¶ 24.)

A POSA would have been motivated to further combine the teachings of Molinet with those of Groups X and/or Y (alone or in combination with other prior art) because, for example, Groups X and Y describe systems involving the use of mobile device deep links and Molinet provides additional detail regarding how to implement such deep links. For example, Molinet teaches how to implement deep links that take into account characteristics of the user's device including "the IP address, operating system version, hardware identifier, operating system provided identifier." (Molinet ¶ 17.) Thus, a POSA seeking further instruction on how to implement the deep links with the systems of Groups X and/or Y—and, specifically, to implement deep links that account for specific characteristics of the user's devices—would turn to Molinet. A POSA would be interested in such instruction because, for example, the systems of Groups X and Y are meant to be used across a wide variety of mobile devices. (*See, e.g.*, Oliver ¶ 7 (referring to "a user's communication device") and Fig. 10 (referring to "user mobile device"); Haggerty at 8:9-32 (noting user device can be a "smart phone device"); https://web.archive.org/web/20161012180240/https:/www.protexting.com/qr-code-generator.html (referring to a client's "phone"); Gupta ¶ 19 (referring to a "mobile device"); Sogani ¶ 49 (user device can be a "smartphone"); Khanna ¶ 103 (same).) A POSA would also expect to succeed in combining the teachings of the references in Groups X and/or Y and Molinet at least because they all rely on similar mobile deep linking technology.

(vi) Further Combined with Rakavy

Rakavy teaches an ad network system. (*See, e.g.*, Rakavy at 2:60-3:14 & Fig. 1.) Among other things, Rakavy teaches authenticating a user in connection with a user's response to an ad to prevent fraudulent responses. (*See, e.g., id.* at 15:14-21.)

A POSA would have been motivated to further combine the teachings of Rakavy with

those of Groups Y and/or Z (alone or in combination with other prior art) to, for example, incorporate Rakavy's disclosures regarding authentication of responses to online ads into the online advertising systems of Groups Y and/or Z and thus further protect against fraudulent ad responses. In addition, at least Agrawal of Group Z teaches techniques for protecting against fraudulent ad responses; a POSA seeking to improve on Agrawal's system for protecting against fraudulent responses (such as responses by click-bots, *see, e.g.*, Agrawal at 7:45-8:2) would consider Rakavy. A POSA would also expect to succeed in combining the teachings of Rakavy with those of Groups Y and/or Z at least because they all rely on the use of similar ad networks.

b. Branch

Branch is a system that allowed businesses to run promotions and other advertising campaigns via text message by facilitating the use of SMS deep links: when a user clicked a link on their mobile device, the mobile device would open the Messages application and present a pre-populated SMS message for the user to send. (*See, e.g.*, https://www.branch.io/resources/blog/using-branch-email-links-to-trigger-sms-referrals/.)

(i) Combined with Group Y

A POSA would have been motivated to combine the teachings of Group Y with Branch to, for example, better incorporate the specific techniques for using deep links for text message-based customer interactions of Branch with the more general techniques for using deep links for online advertising described in Group Y. The references in Group Y facilitate more streamlined interactions between a business and its potential customers by allowing a user to deep link on their mobile device from an ad in a web browser to another application. A POSA would have been interested in applying those deep linking systems specifically to text messages—a well-known medium for marketing communications—in order to expand the reach of a business's advertising campaign, and thus would have looked to the SMS-based mobile deep-linking

system of Branch. This is further supported by the fact that Branch is meant to allow marketers to better communicate with customers. (*See, e.g.*, https://www.branch.io/resources/blog/using-branch-email-links-to-trigger-sms-referrals.) In addition, to the extent Branch does not allow SMS deep links to be activated by a user clicking an ad in a web browser, a POSA would have looked to the ad-based mobile deep linking systems described in Group Y to expand the reach of a business's advertising campaign. A POSA would have also expected to succeed in combining the teachings of Branch and Group Y because both relate to mobile deep linking triggered by a user clicking a link on their mobile device.

(ii) Further Combined with Group Z

A POSA would have been motivated to further combine the teachings of Branch and Group Y with those of Group Z to, for example, expand upon the ad network systems described in Group Z by incorporating the deep linking technology of Branch and described in Group Y—particularly in view of the fact that the references in Group Z teach the use of their systems with mobile devices. (*See, e.g.*, Kubasov ¶ 36; Agrawal at 4:10-16; Demsey ¶ 23; https://web.archive.org/web/20160430182915/https://support.google.com/adsense/answer/6357180?hl=en (tips for optimizing AdSense for "the mobile Web").) A POSA would have also expected that, since the systems of Group Z were compatible with mobile devices, those systems could be successfully combined with the mobile deep linking technologies of Branch and Group Y. Moreover, a POSA would have also expected to succeed in combining these teachings at least because the systems described in Group Z rely on similar ad networks as those described in Group Y—indeed, Agrawal and Google AdSense (Group Z) and Khanna (Group Y) are from the same entity (Google).

(iii) Further Combined with the SMS URI Standard

A POSA would have been motivated to further combine the teachings of the SMS URI

Standard with Branch (alone or in combination with other prior art) because, for example, the SMS URI Standard could be used to facilitate the opening of a user's messaging application with a pre-populated text message—as done in Branch. Moreover, because the SMS URI Standard requires user confirmation to send a message, a POSA would have been interested in using that Standard to ensure that Branch complied with the consent requirements of the Telephone Consumer Protection Act of 1991. (*See* http://docs.fcc.gov/public/attachments/DA-16-1299A1.pdf.) And a POSA would have expected to succeed in combining the Standard and Branch at least because facilitating the opening of a user's messaging application with a pre-populated text message is one of the primary uses of the SMS URI scheme taught by the Standard. (*See* SMS URI Standard at 9.)

(iv) Further Combined with Ad Serving Technology

A POSA would have been motivated to further combine the teachings of Ad Serving Technology with those of Groups Y and/or Z (alone or in combination with other prior art) because, for example, they all relate to systems for online advertising; a POSA seeking more detailed information about how to implement an online advertising system (such as those described in Groups Y and Z) would turn to Ad Serving Technology. A POSA would also expect to succeed in combining the teachings of these references because they all describe features that can be implemented in an ad network system. Moreover, both Group Z and Ad Serving Technology specifically address the use of ad tags. And at least Agrawal in Group Z also teaches the use of Javascript for ad tags (*see* Agrawal at 3:53-55 (referring to instructions embedded in a web page), which is consistent with the implementation instructions provided in Ad Serving Technology.

(v) Further Combined with Molinet

A POSA would have been motivated to further combine the teachings of Molinet with

those of Branch and/or Group Y (alone or in combination with other prior art) because, for example, Branch and Group Y describe systems involving the use of mobile device deep links and Molinet provides additional detail regarding how to implement such deep links. For example, Molinet teaches how to implement deep links that take into account characteristics of the user's device including "the IP address, operating system version, hardware identifier, operating system provided identifier." (Molinet ¶ 17.) Thus, a POSA seeking further instruction on how to implement the deep links with Branch or the systems of Group Y—and, specifically, to implement deep links that account for specific characteristics of the user's devices—would turn to Molinet. A POSA would be interested in such instruction because, for example, Branch and the systems of Group Y are meant to be used across a wide variety of mobile devices. (*See, e.g.*, https://www.branch.io/resources/blog/using-branch-email-links-to-trigger-sms-referrals/ (providing examples for iOS and Android); Sogani ¶ 49 (user device can be a "smartphone"); Khanna ¶ 103 (same).) A POSA would also expect to succeed in combining Molinet with Branch and/or the systems of Group Y at least because they all rely on similar mobile deep-linking technology.

(vi) Further Combined with Rakavy

A POSA would have been motivated to further combine the teachings of Rakavy with those of Groups Y and/or Z (alone or in combination with other prior art) to, for example, incorporate Rakavy's disclosures regarding authentication of responses to online ads into the online advertising systems of Groups Y and/or Z and thus further protect against fraudulent ad responses. In addition, at least Agrawal of Group C teaches techniques for protecting against fraudulent ad responses; a POSA seeking to improve on Agrawal's system for protecting against fraudulent responses (such as responses by click-bots, *see, e.g.*, Agrawal at 7:45-8:2) would consider Rakavy. A POSA would also expect to succeed in combining the teachings of Rakavy

with those of Groups Y and/or Z at least because they all rely on the use of similar ad networks.

(vii) Further Combined with Oliver or Haggerty

To the extent a POSA needed additional instruction to implement Branch to enroll a user in a subscription service, they would have looked to the teachings of Oliver and/or Haggerty. (*See, e.g.*, Exs. A-1, B-1, C-1, A-2, B-2, C-2.) A POSA would have expected to succeed in combining those teachings at least because Branch allows for marketing communications to users, and enrolling a user in a subscription service is a type of marketing communication.

c. Twitter

Twitter is a system that uses features like Web Intents that facilitates deep links from third party websites to the Twitter application, including by opening a pre-populated message to a business (Retweet) that the user could then send (post). (*See, e.g.*, https://developer.twitter.com/en/docs/twitter-for-websites/web-intents/overview.) Twitter Web Intents can be used along with "call to action" Tweets to allow users to easily respond to promotions or other advertising campaigns by Retweeting the original tweet. (*See, e.g.*, https://blog.twitter.com/en_us/a/2013/tweet-tips-most-effective-calls-to-action-on-twitter.)

(i) Combined with Group Y

A POSA would have been motivated to combine the teachings of Group Y with Twitter to, for example, better incorporate the specific techniques for using deep links for Twitter-based customer interactions with the more general techniques for using deep links for online advertising described in Group Y. The references of Group Y facilitate more streamlined interactions between a business and its potential customers by allowing a user to deep link on their mobile device from an ad in a web browser to another application. A POSA would have been interested in applying those deep linking systems specifically to Twitter—a well-known medium for marketing communications (*see, e.g.*, https://blog.twitter.com/en_us/a/2013/tweet-

tips-most-effective-calls-to-action-on-twitter)—in order to expand the reach of a business's advertising campaign, and thus would have looked to Twitter Web Intents. This is further supported by the fact that Twitter Web Intents is meant to better connect third party websites with Twitter content. (*See, e.g.*, https://www.branch.io/resources/blog/using-branch-email-links-to-trigger-sms-referrals.) In addition, to the extent Twitter Web Intents does not allow deep links to Twitter to be activated by a user clicking an ad in a web browser, a POSA would have looked to the ad-based mobile deep linking systems described in Group Y to expand the reach of a business's advertising campaign. A POSA would have also expected to succeed in combining the teachings of Twitter Web Intents and Group Y because both relate to mobile deep linking triggered by a user clicking a link on their mobile device.

(ii) Further Combined with Group Z

A POSA would have been motivated to further combine the teachings of Twitter and Group Y with Group Z to, for example, expand upon the ad network systems described in Group Z by incorporating the deep linking technology of Twitter Web Intents and described in Group Y—particularly in view of the fact that the references in Group Z teach the use of their systems with mobile devices. (*See, e.g.*, Kubasov ¶ 36; Agrawal at 4:10-16; Demsey ¶ 23; https://web.archive.org/web/20160430182915/https://support.google.com/adsense/answer/6357180?hl=en (tips for optimizing AdSense for "the mobile Web").) A POSA would have also expected that, since the systems of Group Z were compatible with mobile devices, those systems could be successfully combined with the mobile deep linking technologies of Twitter Web Intents and Group Y. Moreover, a POSA would have also expected to succeed in combining these teachings at least because the systems described in Group Z rely on similar ad networks as those described in Group Y—indeed, Agrawal and Google AdSense (Group Z) and Khanna (Group Y) are from the same entity (Google).

(iii) Further Combined with Ad Serving Technology

A POSA would have been motivated to further combine the teachings of Ad Serving Technology with those of Groups Y and/or Z (alone or in combination with other prior art) because, for example, they all relate to systems for online advertising; a POSA seeking more detailed information about how to implement an online advertising system (such as those described in Groups Y and Z) would turn to Ad Serving Technology. A POSA would also expect to succeed in combining the teachings of these references because they all describe features that can be implemented in an ad network system. Moreover, both Group C and Ad Serving Technology specifically address the use of ad tags. And at least Agrawal in Group C also teaches the use of Javascript for ad tags (*see* Agrawal at 3:52-55 (referring to instructions embedded in a web page), which is consistent with the implementation instructions provided in Ad Serving Technology.

(iv) Further Combined with Molinet

A POSA would have been motivated to further combine the teachings of Molinet with those of Twitter and/or Group Y (alone or in combination with other prior art) because, for example, Twitter Web Intents and Group Y describe systems involving the use of mobile device deep links and Molinet provides additional detail regarding how to implement such deep links. For example, Molinet teaches how to implement deep links that take into account characteristics of the user's device including "the IP address, operating system version, hardware identifier, operating system provided identifier." (Molinet ¶ 17.) Thus, a POSA seeking further instruction on how to implement the deep links with Twitter Web Intents or the systems of Group Y—and, specifically, to implement deep links that account for specific characteristics of the user's devices—would turn to Molinet. A POSA would be interested in such instruction because, for example, Twitter and the systems of Group Y are meant to be used across a wide variety of

mobile devices. (*See, e.g.*, https://developer.twitter.com/en/docs/twitter-for-websites/web-intents/overview (compatible with iOS and Android); Sogani ¶ 49 (user device can be a "smartphone"); Khanna ¶ 103 (same).) A POSA would also expect to succeed in combining Molinet with Twitter and/or the systems of Group Y at least because they all rely on similar mobile deep linking technology.

(v) Further Combined with Rakavy

A POSA would have been motivated to further combine the teachings of Rakavy with those of Groups Y and/or Z (alone or in combination with other prior art) to, for example, incorporate Rakavy's disclosures regarding authentication of responses to online ads into the online advertising systems of Groups Y and/or Z and thus further protect against fraudulent ad responses. In addition, at least Agrawal of Group C teaches techniques for protecting against fraudulent ad responses; a POSA seeking to improve on Agrawal's system for protecting against fraudulent responses (such as responses by click-bots, *see, e.g.*, Agrawal at 7:45-8:2) would consider Rakavy. A POSA would also expect to succeed in combining the teachings of Rakavy with those of Groups Y and/or Z at least because they all rely on the use of similar ad networks.

(i) Further Combined with Oliver or Haggerty

To the extent a POSA needed additional instruction to implement Twitter to enroll a user in a subscription service, they would have looked to the teachings of Oliver and/or Haggerty. (*See, e.g.*, Exs. A-1, B-1, C-1, A-2, B-2, C-2.) A POSA would have expected to succeed in combining those teachings at least because Twitter allows for marketing communications to users, and enrolling a user in a subscription service is a type of marketing communication.

d. Google AdWords

Google AdWords, including the Message Extensions feature, is a system that allows a business to provide a link with its ad in the Google web browser that, when clicked by a user,

opens a pre-populated text message to the business for the user to send. (*See, e.g.*, https://www.wordstream.com/blog/ws/2016/10/19/adwords-message-extensions.)

(i) Combined with Group Y

A POSA would have been motivated to combine the teachings of Group Y with Google AdWords to, for example, apply the text message-specific deep link feature of Google AdWords to the more general techniques for using deep links for online advertising described in Group Y. The references of Group Y facilitate more streamlined interactions between a business and its potential customers by allowing a user to deep link on their mobile device from an ad in a web browser to another application. A POSA would have been interested in applying those deep linking systems specifically to text messages—a well-known medium for marketing communications—in order to expand the reach of a business's advertising campaign, and thus would have looked to the SMS-based mobile deep-linking system of Google AdWords. This is further supported by the fact that Google AdWords—and, specifically, its Message Extensions feature—is meant to allow businesses to better communicate with its customers. (*See, e.g.*, https://www.wordstream.com/blog/ws/2016/10/19/adwords-message-extensions/.) Moreover, Google AdWords Message Extensions already allows a user to deep link from an ad in a web browser on their mobile device; to the extent a POSA needed further instruction on how to implement such deep links, they would have looked to the teachings of Group Y, which provide additional detail regarding how to facilitate deep links from an ad in a web browser on a mobile device. A POSA would have also expected to succeed in combining the teachings of Google AdWords and Group Y because both relate to mobile deep linking triggered by a user clicking a link in a web browser.

(ii) Further Combined with Group Z

A POSA would have been motivated to further combine Google AdWords and the

teachings of Group Y with those of Group Z to, for example, expand upon the ad network systems described in Group Z by incorporating the deep linking technology provided by the Google AdWords Message Extensions feature and described in Group Y—particularly in view of the fact that the references in Group Z teach the use of their systems with mobile devices. (*See, e.g.*, Kubasov ¶ 36; Agrawal at 4:10-16; Demsey ¶ 23; https://web.archive.org/web/20160430182915/https://support.google.com/adsense/answer/6357180?hl=en (tips for optimizing AdSense for "the mobile Web").) A POSA would have also expected that, since the systems of Group Z were compatible with mobile devices, those systems could be successfully combined with the mobile deep linking technologies of Google AdWords and Group Y. Moreover, a POSA would have also expected to succeed in combining these teachings at least because the systems described in Group Z rely on similar ad networks as those described in Group Y—indeed, Agrawal and Google AdSense (Group Z) and Khanna (Group Y) are from the same entity (Google). In addition, at least Google AdSense (Group Z) was specifically designed to be used with Google AdWords. (*See* https://web.archive.org/web/20170319041918/https://support.google.com/adsense/answer/6242051?hl=en ("The Google AdSense program differs [from other ad networks] in that it delivers Google AdWords ads to your site.").)

(iii) Further Combined with the SMS URI Standard

A POSA would have been motivated to further combine the teachings of the SMS URI Standard with Google AdWords (alone or in combination with other prior art) because, for example, the SMS URI Standard could be used to facilitate the opening of a user's messaging application with a pre-populated text message—as done in Google AdWords. Moreover, because the SMS URI Standard requires user confirmation to send a message, a POSA would have been interested in using that Standard to ensure that Google AdWords (and, specifically, the

Message Extension feature) complied with the consent requirements of the Telephone Consumer Protection Act of 1991. (*See* http://docs.fcc.gov/public/attachments/DA-16-1299A1.pdf.) And a POSA would have expected to succeed combining the Standard and Google AdWords at least because facilitating the opening of a user's messaging application with a pre-populated text message is one of the primary uses of the SMS URI scheme taught by the Standard. (*See* SMS URI Standard at 9.)

(iv) Further Combined with Ad Serving Technology

A POSA would have been motivated to further combine the teachings of Ad Serving Technology with those of Groups Y and/or Z (alone or in combination with other prior art) because, for example, they all relate to systems for online advertising; a POSA seeking more detailed information about how to implement an online advertising system (such as those described in Groups Y and Z) would turn to Ad Serving Technology. A POSA would also expect to succeed in combining the teachings of these references because they all describe features that can be implemented in an ad network system. Moreover, both Group C and Ad Serving Technology specifically address the use of ad tags. And at least Agrawal in Group C also teaches the use of Javascript for ad tags (*see* Agrawal at 3:52-55 (referring to instructions embedded in a web page), which is consistent with the implementation instructions provided in Ad Serving Technology.

(v) Further Combined with Molinet

A POSA would have been motivated to further combine the teachings of Molinet with those of Google AdWords and/or Group Y (alone or in combination with other prior art) because, for example, Google AdWords and Group Y describe systems involving the use of mobile device deep links and Molinet provides additional detail regarding how to implement such deep links. For example, Molinet teaches how to implement deep links that take into

account characteristics of the user's device including "the IP address, operating system version, hardware identifier, operating system provided identifier." (Molinet ¶ 17.) Thus, a POSA seeking further instruction on how to implement the deep links with Google AdWords or the systems of Group Y—and, specifically, to implement deep links that account for specific characteristics of the user's devices—would turn to Molinet. A POSA would be interested in such instruction because, for example, Google AdWords and the systems of Group Y are meant to be used across a wide variety of mobile devices. (*See, e.g.*, https://www.wordstream.com/blog/ws/2016/10/19/adwords-message-extensions (referring to "mobile devices"); Sogani ¶ 49 (user device can be a "smartphone"); Khanna ¶ 103 (same).) A POSA would also expect to succeed in combining Molinet with Google AdWords and/or the systems of Group Y at least because they all rely on similar mobile deep linking technology.

(vi) Further Combined with Rakavy

A POSA would have been motivated to further combine the teachings of Rakavy with those of Groups Y and/or Z (alone or in combination with other prior art) to, for example, incorporate Rakavy's disclosures regarding authentication of responses to online ads into the online advertising systems of Groups Y and/or Z and thus further protect against fraudulent ad responses. In addition, at least Agrawal of Group Z teaches techniques for protecting against fraudulent ad responses; a POSA seeking to improve on Agrawal's system for protecting against fraudulent responses (such as responses by click-bots, *see, e.g.*, Agrawal at 7:45-8:2) would consider Rakavy. A POSA would also expect to succeed in combining the teachings of Rakavy with those of Groups Y and/or Z at least because they all rely on the use of similar ad networks.

(vii) Further Combined with Oliver or Haggerty

To the extent a POSA needed additional instruction to implement Google AdWords to enroll a user in a subscription service, they would have looked to the teachings of Oliver and/or

Haggerty. (*See, e.g.*, Exs. A-1, B-1, C-1, A-2, B-2, C-2.) A POSA would have expected to succeed in combining those teachings at least because Google AdWords allows for marketing communications to users, and enrolling a user in a subscription service is a type of marketing communication.

(viii) Further Combined with Zipwhip

A POSA would have been motivated to further combine Zipwhip with Google AdWords at least because Zipwhip was expressly promoted as compatible with Google AdWords. For example, Zipwhip stated on its website:

> Google recently announced that they're only weeks away from opening up their AdWords click-to-message beta to the public. For the first time, consumers can seamlessly start a conversation with a brand via a single-click from a Google mobile ad. A pre-canned message is then displayed in their native texting app and delivered to the business via their existing phone number. The new conversation is displayed in Zipwhip's software.
>
> Studies show a 265% increase in engagement when you support click-to-message as the main call-to-action in AdWords. Ready to start generating more leads? Sign up for a free trial of Zipwhip and see first-hand.

(https://web.archive.org/web/20161220083256/https://www.zipwhip.com/clicktotext/.)

D. Written Description

35 U.S.C. § 112(a) requires a patent specification to "contain a written description of the invention." "A specification adequately describes an invention when it 'reasonably conveys to those skilled in the art that the inventor had possession of the claimed subject matter as of the filing date.'" *Juno Therapeutics, Inc. v. Kite Pharma, Inc.*, 10 F.4th 1330, 1335 (Fed. Cir. 2021). "But the hallmark of written description is disclosure. Thus, 'possession as shown in the disclosure' is a more complete formulation." *Ariad Pharms., Inc. v. Eli Lilly & Co.*, 598 F.3d 1336, 1351 (Fed. Cir. 2010). "[T]he test requires an objective inquiry into the four corners of the

specification from the perspective of a person of ordinary skill in the art. Based on that inquiry, the specification must describe an invention understandable to that skilled artisan and show that the inventor actually invented the invention claimed." *Id.*

1. "automatically populate a custom message in the messaging application that includes . . . a message body that includes an identifier associated with at least one of the webpage or the user data" ('887 patent, claims 1-20); "automatically populate a custom text message based on the user data" ('897 patent, claims 15-23)

Claim 1 of the '887 patent (and its dependent claims 2-20), as well as claim 15 of the '897 patent (and its dependent claims 16-23) are invalid under § 112 for lack of written description. Specifically, the specification does not describe the elements of these claims that require automatically populating a custom message "that includes an identifier associated with at least one of the webpage ***or the user data***" ('887 patent, claim 1) or a custom message "***based on the user data***" ('897 patent, claim 15). The Asserted Patents' shared specification contains only one description of custom pre-populated messages, which is repeated with slight variations:

> In some implementations, ***the content of the message 213 and/or the phone number 214 can be customized (or defined or populated), based on client's preferences***, by a click-to-text server (such as the click-to-text server 100 described with regards to FIG. 1). In some instances, the phone number 214 can be a short code cellular number or a long code cellular number. In some instances, the content of the message 213 can be related to, for example, a request to join a subscription list, a request to purchase a product or service, a request for customer service, or any number of other ways in which the user mobile device interacts with the client server.

('887 patent at 7:54-65 (emphasis added); *see also id.* at 15:41-45, 19:37-44.) The specification first describes customizing the format of the phone number 214 (short code or long code), which is distinct from the message 213. Regarding the message, it states that the message content "can be related to . . . a request to join a subscription list, a request to purchase a product or service,

[or] a request for customer service"—none of which are specifically associated with a user. A POSA would therefore not understand the specification to describe automatically populating a custom message with "an identifier associated with . . . user data" or a custom message "based on user data."

2. "send, from at least one server and to a mobile device requesting and/or a webpage, means for displaying an invitation to subscribe to a text messaging subscription service via a first application" ('897 patent, claims 15-23)

Claim 15 of the '897 patent (and its dependent claims) allow an unspecified "server" to send "means for displaying an invitation to subscribe to a text message subscription service via a first application" to either a mobile device or a webpage. To the extent "means for displaying an invitation to subscribe to a text message subscription service via a first application" refers to an integration tag, and to the extent the limitation "send, from at least one server and to a mobile device requesting and/or a webpage" is intended to encompass a scenario in which the integration tag is sent directly from a click-to-text server to a user device, the Asserted Patents' shared specification fails to provide written description support for this claim limitation. The specification describes sending an integration tag from a click-to-text server to a client server. (*See, e.g.*, '887 patent at 11:59-61 & Fig. 1 ("[T]he click-to-text server can send an integration tag . . . to the client server"), 11:65-12:4 ("the request for the promotional message can be sent to the click-to-text server because the page is integrated with (includes or incorporates) ***the integration tag provided by the click-to-text server***" (emphasis added)).) The specification does not describe sending the integration tag from a click-to-text server to the mobile device. Instead, the specification describes the integration tag as being "integrated" with a "page (e.g., a webpage) associated with ***the client***" loaded at the mobile device—meaning the integration tag was sent from the click-to-text server to the client server and then loaded at the mobile device; it

was not sent directly to the mobile device. (*See, e.g.*, *id.* at 11:65-12:4 ("[T]he integration tag can be attached to a page load event at the user mobile device. ***When the user is opening a page (e.g., a webpage)*** associated with the client, the request for the promotional message can be send to the click-to-text server ***because the page is integrated with the integration tag*** provided by the click-to-text server." (emphases added)).)

3. "send, from the at least one server and to the mobile device, means for causing . . . the mobile device to transition from the first application to a second application different from the first application" ('897 patent, claims 15-23)

Claim 15 of the '897 patent (and its dependent claims) also allow an unspecified "server" to "send . . . means for causing . . . the mobile device to transition from the first application to a second application different from the first application." To the extent "means for causing . . . the mobile device to transition from the first application to a second application different from the first application" refers to a URI, the Asserted Patents' shared specification fails to provide written description support for this limitation. The specification describes sending a URI from a click-to-text server. (*See, e.g.*, '887 patent at 10:32-36 ("The client-to-text[3] server can generate a response message including the URI of the second user interface and send the response message to the user mobile device to cause the second user interface to open with message and phone number pre-populated.").) The specification does not describe sending a URI from another server, for example the client server. (*See, e.g.*, *id.* at Fig. 1 (showing "Client Server" as separate from the "Click-to-Text" Server).)

[3] The specification occasionally refers to a "***client***-to-text server" instead of a "***click***-to-text server." This appears to be a typo. (*See, e.g.*, '887 patent at 19:32-33 & Fig. 1 (referring to "client-to-text server 100" wherein Fig. 1 shows "Click-to-Text Server 100").)

4. "sending the URI from the at least one server to the mobile device" ('897 patent, claims 24-30) / receiving a URI "from the at least one web server" ('074 patent, claims 1-14)

Claims 24 of the '897 patent and 1 of the '074 patent (and their dependent claims) also allow an unspecified "server" or "web server" to send a URI. This is not described in the Asserted Patents' shared specification for the same reasons discussed above with respect to claim 15 of the '897 patent.

5. Receiving from the web server or sending to the mobile device "a uniform resource identifier (URI)" "in response to at least one of (1) the integration tag executing or (2) the indication of the first user interaction [with the promotional message]" ('074 patent, claims 1-30)

All of the claims of the '074 patent allow a URI to be received or sent "in response to . . . the integration tag executing," as well as in response to a user interaction with the promotion. Specifically, claims 1 and 8 (and their dependent claims) require "***[receiving]/[code configured to cause the mobile device to receive]*** from the at least one web server ***and in response to at least one of (1) the integration tag executing*** or (2) the indication of the first user interaction [with the promotional message], ***a uniform resource identifier (URI)***." ('074 patent, claims 1 and 8 (emphases added).) Claims 16 and 23 (and their dependent claims) similarly require "***[sending]/[code configured to cause a server to send] a uniform resource identifier (URI)*** to the mobile device . . . ***in response to at least one of (1) the integration tag executing*** or (2) the indication of the first user interaction [with the promotional message]." (*Id.* at claims 16 and 23.)

The Asserted Patents' shared specification fails to describe sending or receiving a URI "in response to . . . the integration tag executing." Instead, the specification only describes the URI being sent in response to a user interacting with a promotion. (*See, e.g.*, '887 patent at 9:27-10:36 ***("[I]n response to the user selecting, clicking, or tapping the 'sign-up' link*** 203 via the

first user interface 201, ***the user mobile device can send a HTTP POST request to the client-to-text server*** notifying the client-to-text server of the user's select/click/tap on the 'sign-up' link 203. . . . ***In response to receiving the HTTP request*** from the user mobile device, ***the client-to-text server can determine, based on a mobile device identifier, a uniform resource identifier (URI)*** . . . . The client-to-text server can generate a response message including the URI . . . and send the response message to the user mobile device . . . ." (emphases added)).)

6. "the integration tag configured to be executed by mobile devices and not desktop computers or laptop computers" ('887 patent, claim 5)

Claim 5 of the '887 patent requires the integration tag of claim 1 to be configured to be executed "by mobile devices and ***not desktop computers or laptop computers***." This claim lacks written description support at least because the Asserted Patents' shared specification does not describe an integration tag that is ***precluded*** from being executed by desktop or laptop computers. In fact, the specification does not discuss integration tags in connection with desktop or laptop computers at all.

7. "authenticate a user of the mobile device based on information in the custom message" ('887 patent, claim 7); "the custom text message includes a second user identifier" ('897 patent, claim 19)

Claim 7 of the '887 patent and claim 19 of the '897 patent require providing information to authenticate or identify a user ***in*** the custom message. *See* '887 patent, claim 7 ("authenticate a user of the mobile device based on information ***in*** the custom message"); '897 patent, claim 19 ("the custom text message ***includes*** a second user identifier"). These claims lack written description support at least because the Asserted Patents' shared specification fails to describe providing a user identifier in the custom message, as opposed to ***with*** the custom message. (*See, e.g.*, '887 patent at 15:66-16:5 ("In some implementations, in response to receiving the message

513, the click-to-text server can authenticate the user based on a user identifier. The user identifier can include, but are not limited to, a user phone number, a sender phone number, a device identifier of the user mobile device, and/or other information identifying the user or the user mobile device.”).) The specification states that the user identifier “can be included in the signal sent to the click-to-text server ***in response to receiving the message***” (*id.* at 8:16-19 (emphasis added)) or received “***prior to receiving the message***” (*id.* at 8:19-20 (emphasis added)); it does not state that the user identifier can be ***included in*** the message.

E. Indefiniteness

35 U.S.C. § 112(b) requires patent claims to “particularly point[] out and distinctly claim[] the subject matter which the inventor or a joint inventor regards as the invention.” In other words, “claims are required to be cast in clear—as opposed to ambiguous, vague, indefinite—terms” because “[i]t is the claims that notify the public of what is within the protections of the patent, and what is not.” *In re Packard*, 751 F.3d 1307, 1313 (Fed. Cir. 2014). “[A] patent is invalid for indefiniteness if its claims, read in light of the specification delineating the patent, and the prosecution history, fail to inform, with reasonable certainty, those skilled in the art about the scope of the invention.” *Nautilus, Inc. v. Biosig Instruments, Inc.*, 572 U.S. 898, 901 (2014).

1. “send . . . to a mobile device requesting and/or a webpage, means for displaying an invitation to subscribe” (’897 patent, claims 15-23)

Claim 15 reads:

> 15. A non-transitory processor-readable medium storing code configured to be executed by a processor, the code including instructions configured to cause the processor to:
>
> ***send, from at least one server and to a mobile device requesting and/or a webpage, means for displaying an invitation to***

> ***subscribe to a text messaging subscription service via a first application***;
>
> send, from the at least one server and to the mobile device, means for causing (1) the mobile device to transition from the first application to a second application different from the first application in response to the mobile device detecting a first interaction with the invitation, the second application being a messaging application, and (2) the second application to automatically populate a custom text message based on the user data;
>
> receive, from the mobile device, the custom text message in response to the mobile device detecting a second interaction with the messaging application; and
>
> deliver an installment of the text messaging subscription service without receiving an opt-in communication after receiving the custom text message.

(Emphasis added.)

Claim 15 (and its dependent claims 16-23) thus require code that causes a processor to "send, from the at least one server ***and to a mobile device requesting and/or a webpage***, means for displaying an invitation to subscribe to a text messaging subscription service via a first application." These claims are indefinite at least because a POSA considering the claims in view of the intrinsic evidence would not understand what it means to send "to a mobile device requesting and/or a webpage" means for displaying a subscription invitation. A POSA would not, for example, know what the mobile device is "requesting"; nor would a POSA understand the scope of a system wherein means for displaying a subscription invitation could be sent "to . . . a webpage," as opposed to a computer hosting a webpage.

2. "the second application to automatically populate a custom text message based on the user data" ('897 patent, claims 15-23)

Claim 15 (and its dependent claims 16-23) also require code that causes a processor to "send, from the at least one server and to the mobile device, means for causing . . . the second

application to automatically populate a custom text message based on ***the user data***." But claim 15 but does not define "the user data." Nor is it reasonably clear based on the intrinsic evidence what that "user data" is. As a result, a POSA could not reasonably ascertain the scope of claims 15-23, rendering them indefinite. *See Energizer Holdings, Inc. v. Int'l Trade Comm'n*, 435 F.3d 1366, 1370-71 (Fed. Cir. 2006) (a claim is indefinite if it lacks antecedent basis for a claim term and the scope of the claim is not "reasonably ascertainable by those skilled in the art").

3. "a uniform resource identifier (URI) that deeplinks to and causes the mobile device to . . ." ('074 patent, claims 1-30)

All of the claims of the '074 patent (through the independent claims 1, 8, 16, and 23) require "a uniform resource identifier (URI) that ***deeplinks to*** and causes the mobile device" to take certain actions. To illustrate, claim 1 states:

> 1. A method, comprising:
>
> receiving, from at least one web server, an integration tag included in a webpage;
>
> displaying the webpage using a web browser application of a mobile device;
>
> sending, from the mobile device, to the at least one web server, and in response to the integration tag executing, (1) a mobile device identifier that identifies the mobile device, and (2) a request to retrieve an identifier associated with at least one of a product or a service presented via the webpage;
>
> receiving, at the mobile device, from the at least one web server, and in response to sending the mobile device identifier and the request to retrieve the identifier, a first signal causing a frame to be displayed with the webpage via the web browser application, the frame including a promotional message associated with joining a subscription list;
>
> sending, to the at least one web server, an indication of a first user interaction with the promotional message;
>
> receiving, from the at least one web server and in response to at least one of (1) the integration tag executing or (2) the indication of

> the first user interaction, ***a uniform resource identifier (URI) that deeplinks to*** and causes the mobile device to automatically (1) switch from rendering the web browser application to rendering a text messaging application and (2) generate a text message with a pre-populated phone number and a pre-populated message body containing a request to join the subscription list;
>
> sending the text message including the message body prepopulated with the request to join the subscription list in response to a second user interaction with the text messaging application such that the mobile device is subscribed to the subscription list in response to the text message being sent to the pre-populated phone number; and
>
> receiving an installment of a subscription associated with the subscription list without sending an opt-in communication after sending the text message containing the pre-populated message body.

(Emphasis added).

The claims of the ’074 patent are thus indefinite at least because a POSA considering the claims in view of the intrinsic evidence would not understand what a “uniform resource identifier (URI) that deeplinks to” is—without further explanation of what exactly the URI “deeplinks to.”

OF COUNSEL:

Gene Novikov
Hannah Jiam
Raghav Krishnapriyan
Joyce C. Li
MORRISON FOERSTER
425 Market Street
San Francisco, CA 94105-2482
Tel: (415) 268-7000

Dated: July 27, 2023
10941066 / 22870.00001

POTTER ANDERSON & CORROON LLP

By: */s/ Bindu A. Palapura*

David E. Moore (#3983)
Bindu A. Palapura (#5370)
Andrew L. Brown (#6766)
Hercules Plaza, 6th Floor
1313 N. Market Street
Wilmington, DE 19801
Tel: (302) 984-6000
dmoore@potteranderson.com
bpalapura@potteranderson.com
abrown@potteranderson.com

Attorneys for Defendant Stodge Inc. d/b/a Postscript

CERTIFICATE OF SERVICE

I, Bindu A. Palapura, hereby certify that on July 27, 2023, true and correct copies of the within document were served on the following counsel of record at the addresses and in the manner indicated:

VIA ELECTRONIC MAIL

Jack B. Blumenfeld
Michael J. Flynn
MORRIS, NICHOLS, ARSHT & TUNNELL LLP
1201 North Market Street
P.O. Box 1347
Wilmington, DE 19899
jblumenfeld@morrisnichols.com
mflynn@morrisnichols.com

Christopher C. Campbell
Ryan A. Schmid
Jonathan Weinberg
Stephen Scaife
KING & SPALDING LLP
1700 Pennsylvania Avenue, NW
Suite 200
Washington, DC 20006
ccampbell@kslaw.com
rschmid@kslaw.com
jweinberg@kslaw.com
sscaife@kslaw.com
Attentive_Mobile@kslaw.com

Britton F. Davis
Brian Eutermoser
KING & SPALDING LLP
1401 Lawrence Street, Suite 1900
Denver, CO 80202
BFDavis@KSLAW.com
beutermoser@kslaw.com
Attentive_Mobile@kslaw.com

/s/ Bindu A. Palapura
Bindu A. Palapura

10693761/22870.00001