UNITED STATES PATENT AND TRADEMARK OFFICE

BEFORE THE PATENT TRIAL AND APPEAL BOARD

GEL BLASTER, INC.,
Petitioner

v.

SPIN MASTER, INC.,
Patent Owner

Case IPR2023-00302
Patent 8,640,683

PATENT OWNER'S PRELIMINARY RESPONSE

SPIN MASTER 2011
Prime Time Toys et al. v. Spin Master, Inc.
IPR2023-01339

TABLE OF CONTENTS

I. INTRODUCTION 1

II. THE ’683 PATENT 4

III. THE DUNECRAFT REFERENCE 8

IV. CLAIM CONSTRUCTION 9

V. PETITIONER CANNOT PREVAIL ON ANY CHALLENGED CLAIM 9

A. Petitioner does not explain how DuneCraft discloses the construed “super absorbent polymer” (SAP) limitation [All Grounds] 9

1. Petitioner withheld its full claim construction position regarding the mass absorbency of SAPs 10

2. DuneCraft, which does not say “super absorbent” or provide the mass absorbency of Spit Balls, lacks express disclosure.....14

3. Petitioner does not allege, and DuneCraft does not provide, inherent disclosure of SAPs 17

B. The Grune Declaration is Entitled to Little or No Weight [All Grounds] 18

1. Petitioner misidentifies the level of ordinary skill.....18

2. Dr. Grune is not a POSITA under any reasonable articulation of the ordinary skill level for the ’683 Patent 23

3. Dr. Grune’s testimony cannot be credited 24

C. DuneCraft does not anticipate—it lacks “[a] projectile launcher for launching the ammunition” [Ground 1] 26

1. A human arm is not “a projectile launcher for launching the ammunition”.....27

2. A tube is also not “a projectile launcher for launching the ammunition”.....30

3. DuneCraft does not depict launching the Spit Balls polymer product through a tube 31

D. Petitioner provides no legitimate reasons to combine DuneCraft with Rappaport or Illuzi [Grounds 2 and 3] 34

1. Dr. Grune's ineffective testimony on projectile launchers cannot substantiate Petitioner's motivation arguments 35

2. DuneCraft-Rappaport.....38

3. DuneCraft-Illuzi 43

E. Petitioner does not allege, much less prove, that DuneCraft was publicly accessible [All Grounds] 44

VI. CONCLUSION.....50

EXHIBITS

EX2001	Archived Gel Blaster Surge Product Page, https://web.archive.org/web/20220522211034/https://gelblaster.com/products/gel-blaster-surge-x
EX2002	Xploderz™ Blast Excitement Into Active Play, https://www.prnewswire.com/news-releases/xploderz-blast-excitement-into-active-play-115556469.html
EX2003	Complainant's Claim Construction Brief, *Certain Soft Projectile Launching Devices, Components Thereof, Ammunition, and Products Containing Same*, Inv. No. 337-TA-1325
EX2004	Respondent's Reply Claim Construction Brief, *Certain Soft Projectile Launching Devices, Components Thereof, Ammunition, and Products Containing Same*, Inv. No. 337-TA-1325
EX2005	Deposition Transcript, Dr. Guerry Grune, February 10, 2023 (excerpt)
EX2006	Collins Dictionary, Tenth Edition (2009) (excerpt)
EX2007	Commission Investigative Staff's Markman Brief, *Certain Soft Projectile Launching Devices, Components Thereof, Ammunition, and Products Containing Same*, Inv. No. 337-TA-1325
EX2008	Duke University, Mechanical Engineering & Materials Science, Undergraduate Program Handbook (2022-2023)
EX2009	Duke University, Thomas Lord Department of Mechanical Engineering & Materials Science, Undergraduate Courses, https://mems.duke.edu/undergrad/degree/courses
EX2010	Excerpts From 3rd Rock Essentials Website, https://3rdrockessentials.com/pages/about-us & https://3rdrockessentials.com/collections/all-items
EX2011	Order Granting in Part Defendant's Motion to Exclude Expert Opinion Testimony of Dr. Grune, *Plate, LLC v. Rctenn, LLC*, 3:18-cv-806 (M.D. Tenn. Feb. 18, 2021)

EX2012 Collins Dictionary, Tenth Edition (2009) (excerpt defining “launcher”)

I. INTRODUCTION

Before Patent Owner Spin Master, Inc. and its exclusive licensee, Hasbro, Inc., asserted the '683 Patent and sought an exclusion order from the ITC against the Gel Blaster Surge and Gel Blaster StarFire projectile launcher products, Petitioner lauded its use of "***revolutionary*** water based Gellets" that are "[m]ade using ***Super Absorbent Polymers*** (SAP)." EX2001, pp. 1-2.

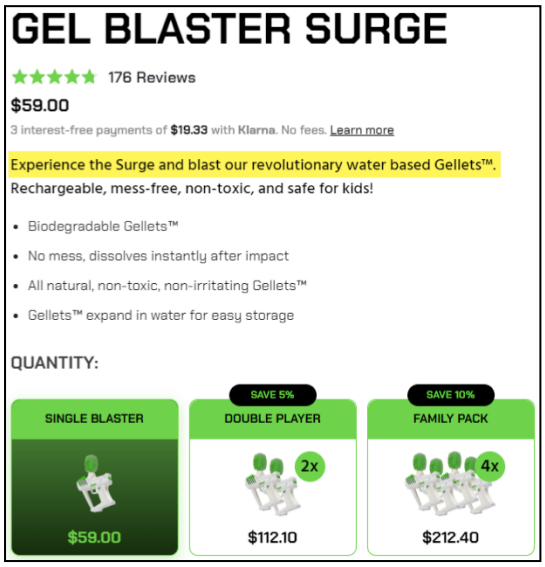

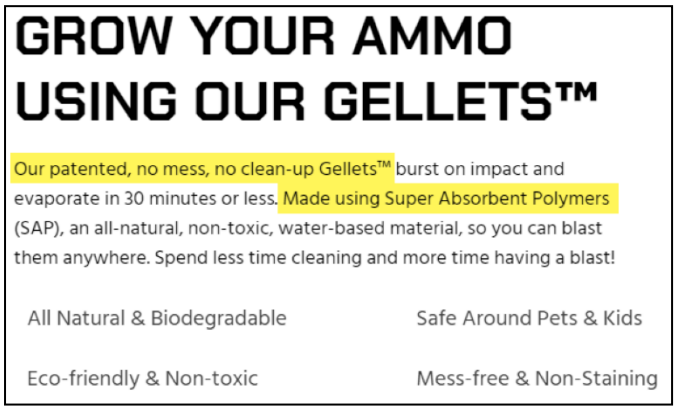

Less than a year later, Petitioner is singing a different tune. Now that Petitioner faces infringement risk regarding the '683 Patent, it is apparently no longer "revolutionary" to leverage the unique properties of SAPs as ammunition for a projectile launcher. Petitioner now says this innovation—disclosed to the world by the '683 Patent's inventors in 2010, a decade before Petitioner' Surge and StarFire products—is either anticipated or rendered obvious by the prior art. Petitioner's new-found misgivings about the revolutionary nature of SAP projectile ammunition

are not credible. And the litany of conclusory assertions, inferential leaps, and unsupported theories throughout the Petition make *inter partes* review untenable.

To make matters worse, Petitioner has not told the whole story regarding the "super absorbent polymer" claim term at the heart of the '683 Patent. In the parallel ITC investigation, Petitioner and its expert have taken a position on what they think this term requires under each of two competing constructions applied in the Petition. Petitioner chose not to share that position with the Board and made no attempt to address it in the Petition's prior art analysis. *See infra*, § V.A.

The remainder of the Petition is likewise deficient. For example, several key fact assertions in the Petition should be deemed bare attorney argument because Petitioner's proffered expert declaration is entitled to little or no weight. Petitioner's expert does not meet the level of ordinary skill and is not qualified to testify from the perspective of a skilled artisan. *See infra*, § V.B.

Equally problematic, Petitioner has no believable theory for how its primary reference, DuneCraft (EX1007; EX1009), discloses the limitation of a "projectile launcher for launching the ammunition." To side with Petitioner, the Board would have to adopt one of two dubious positions: **(A)** a human arm somehow constitutes a "projectile launcher" device; or **(B)** a crude marketing cartoon is an express disclosure of launching a polymer product called "Spit Balls" through a tube, despite the DuneCraft reference repeatedly instructing users to ***throw*** Spit Balls. *See infra*,

§ V.C. Neither of Petitioner's positions has merit.

Petitioner fares no better on the issue of motivation to combine for its obviousness grounds. Petitioner's assertions that firing Spit Balls from a gun is safe and environmentally friendly are easily disproved, and Petitioner's resort to *KSR* buzzwords like "simple substitution," "predictable results" and "obvious to try" are no cure for the Petition's lack of legitimate reasons to combine the prior art. *See infra*, § V.D.

Lastly, separate and apart from the many problems with its anticipation and obviousness arguments, Petitioner dropped the ball again by failing to establish that the DuneCraft reference is prior art to the '683 Patent. At best, Petitioner's assertions might show that the DuneCraft reference represents certain webpages on the Internet in 2009. As a matter of law, however, such assertions do not rise to the standard of demonstrating "public accessibility" because they do not address whether a skilled person would have identified the webpages in question with mere reasonable diligence. *See infra*, § V.E.

The above-identified flaws in the Petition, each detailed further below, are fatal to Petitioner's case. Institution is not warranted, deserved, or even tenable.

II. THE '683 PATENT

The '683 Patent claims innovative "soft-projectile launching devices that launch super absorbent polymer projectiles." EX1001 ('683 Pat.), 1:12-16.

At the time of the '683 Patent in 2010, the recreational projectile launcher market was dominated by foam-ammunition launchers, paintball guns, and airsoft guns. Each of these launcher types presented a distinct feature set that appealed to certain groups of enthusiasts and casual customers. And yet, despite their widespread commercial adoption, foam, paintball, and airsoft designs also had significant tradeoffs and drawbacks. *See*, *e.g.*, EX1001, 1:20-67.

For example, "[o]ne reason [Hasbro's] NERF® foam and other foam based projectile toys have become so popular has been due to the soft and light properties of the foam material," which "can be formed into balls and darts and fired from toy weaponry with little risk of injury." EX1001, 1:37-48. But "[b]ecause foam based materials . . . are light, they are highly susceptible to air forces when trying to project them through the air in free flight as occurs when fired from toy weaponry." *Id.*, 1:53-56; *see also id.*, 1:58-61 ("The low density of foam based projectiles decreases the momentum of the projectiles, which in turn increases the effect of air resistance, drag, and other motion retarding forces."). As for paintball and airsoft guns, while less susceptible to air forces, many of "these systems are for adult use only due to the energy imparted to the projectile and the ability of the projectile to do serious

harm." *Id.*, 1:63-67.

The '683 Patent's inventors sought "to provide an alternative soft-projectile launching system to those presently on the market," one that "increase[d] the user experience as compared to foam-based projectile toys, yet [also] remain[ed] safe for children to use." EX1001, 2:3-5, 3:10-13. The inventors achieved this feat by creating a new type of projectile launcher that leverages the unique properties of super absorbent polymers ("SAPs"). SAPs are polymers that can absorb an extremely large amount of water relative to their own mass. *Id.*, 3:46-53. SAPs have been known since the 1960s and were primarily used in household items like diapers, protective underwear, and sanitary napkins. But SAPs had never before been formed as "a plurality of substantially spherical soft-projectiles," nor had a launcher ever been designed to use such SAPs as ammunition. *Id.*, 9:39-43.

The inventors recognized that SAP projectiles—unlike foam, paintball, and plastic projectiles—can "maintain their shape under modest pressure" and also break apart under excessive pressure. *See*, *e.g.*, EX1001, 3:54-4:3.

> The ability of SAP projectiles to maintain their shape allows them to be projected with a reasonable force and velocity without breaking apart. However, under excessive pressure, hydrated SAP projectiles will break down and lose their shape. Because SAP projectiles break down under excessive pressure, the force at impact is spread over a much wider surface area, thus reducing the likelihood of injury.

Id., 3:63-4:3. Where "foam based projectiles [] rapidly slow after initial firing and easily curve off line," SAP projectiles do not. *Id.*, 1:53-62; *see also id.*, 3:10-13 ("increase the user experience as compared to foam-based projectile toys"). And, where paintballs and plastic airsoft-gun projectiles "do serious harm," (*id.*, 1:63-67), "super absorbent polymer projectile launching toys . . . remain safe for children to use," (*id.*, 3:10-14).

The '683 Patent's Figure 1 (below, annotated in red as described at 5:41-6:35) "illustrates a cross section of one embodiment of a projectile launching toy designed for use with a plurality of projectiles made from a super absorbent polymer." EX1001, 3:25-27.

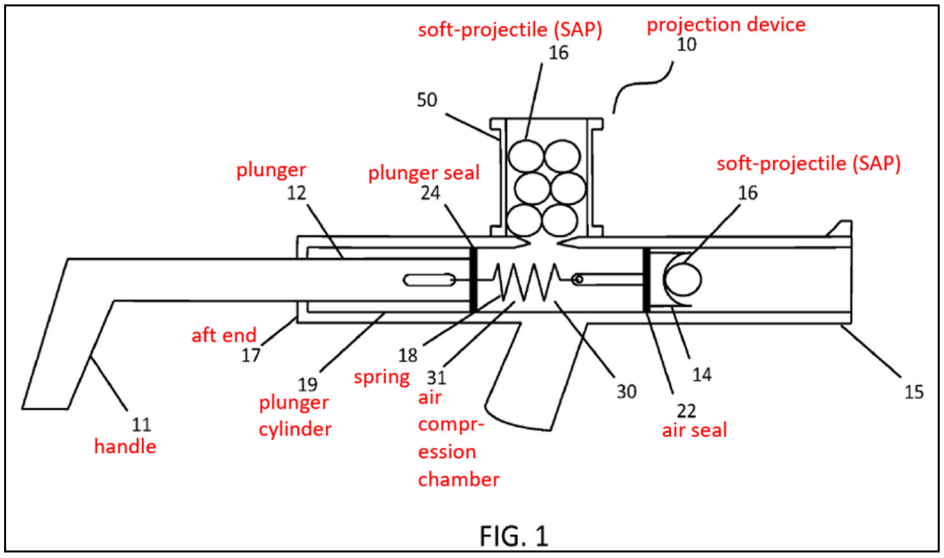

To begin the process, "a user pulls back on the handle 11 which retracts the plunger 12 out of the aft end 17 of a plunger cylinder 19." *Id.*, 5:47-50. As shown, "[t]he plunger 12 is attached to spring 18." *Id.*, 5:50-51. As the spring 18 is stretched, "air

is sucked into an air compression chamber 31 located between plunger seal 24 and air seal 22." *Id.*, 5:51-53. Then, "[w]hen the user releases the handle 12, the spring 18 quickly pulls the plunger 12 back inside the plunger cylinder 19," which "creates a rapid increase in air pressure in the air compression chamber 31 between the plunger seal 24 and air seal 22." *Id.*, 5:56-60. This air pressure causes "soft-projectile 16"—a SAP—to be "launched from the projection device 10 on a free trajectory." *Id.*, 5:60-65.

The original patentee, Maya Group, implemented the '683 Patent's innovations in a line of blaster products called Xploderz (e.g., pictured below, left).

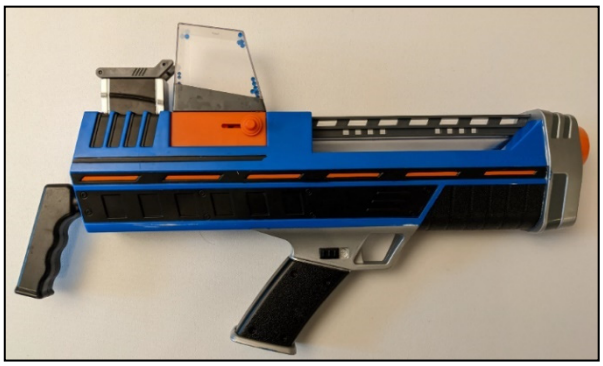

Xploderz XStormer 1000

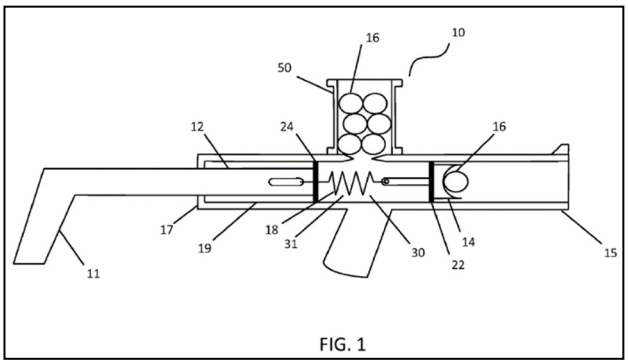

'683 Patent, Figure 1

These patent-practicing Xploderz products enjoyed immense success when they launched in 2011, and they were the recipient of widespread industry praise. EX2002, p. 1 ("Xploderz were named a Best New Toy of 2011 by the British Toy and Hobby Association"). The success of Xploderz sparked an entirely new multi-hundred-million dollar product category of launchers that use SAP ammunition.

III. THE DUNECRAFT REFERENCE

Petitioner alleges that the DuneCraft reference consists of two webpages (EX1007, p. 26; EX1009, p. 23) printed from the website "thinkgeek.com." Pet., 10-11. Petitioner further alleges that these printouts represent those webpages as of November 2009. *Id*.

DuneCraft presents a product called "Spit Balls."[1] According to DuneCraft, once grown in water, Spit Balls "are slimy and squishy." EX1007, p. 26. "If you throw them gently, they will bounce. If you throw them hard enough, they will explode into mushy pieces." Thus, the slogan: "grow 'em and throw 'em." *Id*.

EX1009, p. 23

EX1007, p. 26

[1] Patent Owner's discussion of DuneCraft is limited to the contents of exhibits EX1007 and EX1009. No statement here or elsewhere by Patent Owner characterizes or applies to any alleged prior art reference cited by Petitioner in the parallel ITC investigation.

IV. CLAIM CONSTRUCTION

The Board should deny institution without defining any claim terms. Patent Owner's arguments for denial do not rise or fall with any disputed claim interpretations. For example, Patent Owner's arguments regarding the "super absorbent polymer" limitations in Section V.A apply under both of the constructions employed by Petitioner.

V. PETITIONER CANNOT PREVAIL ON ANY CHALLENGED CLAIM

A. Petitioner does not explain how DuneCraft discloses the construed "super absorbent polymer" (SAP) limitation [All Grounds]

In an *inter partes* review, "the petitioner is master of its complaint." *SAS Inst., Inc. v. Iancu*, 138 S.C. 1348, 1355, 1359 (2020). Here, Petitioner exercised that power to allege that the DuneCraft reference anticipates the '683 Patent's independent claim 1 under two constructions of the term "super absorbent polymer" proffered in the parallel ITC investigation.[2] Feigning transparency, Petitioner says it "believes that this term is indefinite" and, thus, "will use both constructions [from Complainants, Respondents, and Staff] given in the Joint Chart" for the ITC investigation. Pet., 10. But Petitioner is not being transparent, nor is Petitioner

[2] While Grounds 2 and 3 allege obviousness, Petitioner relies on the anticipation analysis from Ground 1 regarding the "super absorbent polymer" limitation.

staying true to the constructions it promised to use in this proceeding.

The critical fact left unsaid is that Petitioner and its expert, Dr. Grune, have indicated repeatedly in the ITC investigation that, regardless of the adopted construction, a super absorbent polymer is a polymer capable of absorbing at least a certain amount of liquid relative to its own ***mass***. While the parties differ on the minimum threshold of absorbency, everyone agrees that the focus for delineating a super absorbent polymer is on the relative ***mass*** of absorbed liquid. Petitioner's DuneCraft reference does not refer to the Spit Balls product as a super absorbent polymer, and it says nothing at all about ***mass*** absorbency. Petitioner does not contend otherwise. And yet, Petitioner represents to the Board that DuneCraft discloses the '683 Patent's "super absorbent polymer" limitation under both of the ITC constructions. It does not, and Petitioner cannot allege so credibly.

1. <u>Petitioner withheld its full claim construction position regarding the mass absorbency of SAPs</u>

The Board's rules "place an affirmative burden on petitioners to 'set forth: . . . [h]ow the challenged claim is to be construed.'" *OrthoPediatrics Corp. v. K2M, Inc.*, IPR2018-01548, Paper 9 at 10 (March 1, 2019) (quoting *Medicines Co. v. Mylan, Inc.*, 853 F.3d 1296, 1308 (Fed. Cir. 2017); 37 C.F.R. § 42.104(b)(3)). In this case, as to the term "super absorbent polymer," Petitioner commits to use the two constructions highlighted (in yellow and blue) below from the parties' Joint

Claim Construction Chart (EX1020) in the parallel ITC investigation:

1. "super absorbent polymer"

Term	Claim(s)	Proposed By	Complainant' Construction	Respondents' Construction	Staff's Construction
"super absorbent polymer"	1	Gel Blaster	Plain and ordinary meaning, i.e., "polymer that can absorb an extremely large amount of liquid relative to its own mass"	PTT and Splat-R-Ball: No construction necessary; term of art known to those skilled in the art at the time of the alleged invention Gel Blaster: Indefinite	No construction necessary; term of art known to those skilled in the art at the time of the alleged invention

Pet., 9. Like the Joint Claim Construction Chart, Petitioner presents the respective constructions without comment, leaving much of the story untold. The missing context is that, in the ITC investigation, as an alternative to their indefiniteness position, Petitioner and Dr. Grune tried to argue that a "super absorbent polymer" under each of these competing constructions has a minimum absorbency threshold corresponding to a multiple of its original mass.

First, regarding the Complainant's construction—"polymer that can absorb an extremely large amount of liquid relative to its own mass" (above in yellow)—Petitioner disputed Patent Owner's assertion that "a SAP can absorb liquid anywhere ***between ten times to a thousand times of the polymer's own weight***." EX2003, p. 13. Instead, Petitioner said, "[i]f the ALJ is inclined to find a lower bound, ***at least 100 times original weight is the minimum*** supported by the totality of the evidence,

(EX2004, p. 11).[3] Petitioner announced its "100 times original weight" position on November 29, 2022, just days before initiating this proceeding on December 5, 2022. *Id*., p. 36.

Second, relevant to the Respondents' and Staff construction—i.e., "term of art known to those skilled in the art" (above in blue)—Petitioner and Dr. Grune have taken the position that those of skill use the term super absorbent polymer with an understanding that such polymers generally have an absorbency of ***at least 100 times the original polymer weight***. Dr. Grune affirmed this position in deposition:

11	Q. So last deposition you told me that a
12	POSITA would understand that a superabsorbent
13	polymer was a polymer that had the ability to
14	absorb at least 100 times its weight in fluid.
15	Do you recall that?
16	A. Yes.

[3] "Mass" is often measured in terms of weight. Thus, the parties use "weight" and "mass" interchangeably.

17	Q. Okay. And do you still believe that
18	a POSITA would understand that a superabsorbent
19	polymer was a polymer that had the ability to
20	absorb at least 100 times its weight in fluid?
21	A. Yes.
22	Q. Okay. Haven't changed your mind,
1	right?
2	A. No, sir.

EX2005, pp. 11-12.

Petitioner cannot take back what it has already asserted and continues to assert in the ITC investigation. In Petitioner's view, the competing constructions of "an extremely large amount of liquid relative to its own mass" and "term of art" require the same thing—a minimum absorbency threshold based on ***mass***. While the Board's rules do not prevent parties from taking inconsistent positions in different forums, there ***is*** a "duty of candor and good faith." 37 C.F.R. § 42.11(a). Petitioner and Dr. Grune do not explain or justify why the Board should be left in the dark regarding their position on the "super absorbent polymer" claim term, especially when that position was expressed and affirmed before and after filing this Petition. *Facebook, Inc. v. Sound View Innovations, LLC*, IPR201700998, Paper 13 at 17-18 (PTAB Sep. 5, 2017) ("At the very least, Petitioner's failure to inform us of its

differing claim construction arguments before the district court raises the specter of lack of candor."). In the interests of candor, good faith, and fairness, the Board should hold Gel Blaster and Dr. Grune to their position that regardless of the adopted construction, a super absorbent polymer (in their view) is one defined in terms of its increase in ***mass***.[4]

2. DuneCraft, which does not say "super absorbent" or provide the mass absorbency of Spit Balls, lacks express disclosure

Petitioner's one-paragraph argument that "DuneCraft ***discloses*** that the 'soft-projectiles' are 'formed from hydrated super absorbent polymer'" does not pass muster. *See* Pet., 23. DuneCraft purportedly discloses a "polymer" of some kind, but it does not say that the unidentified polymer is a ***super absorbent*** polymer. *See* EX1007, p. 26 ("What if instead of real expectorations, you flung awesome spherical polymers at your friends and/or coworkers."). Nor does DuneCraft say that the unidentified polymer absorbs a certain amount of liquid relative to its original ***mass***, which everyone agrees is critical to delineating a super absorbent polymer. *Supra*,

[4] The Board need not determine whether the minimum absorbency threshold of a SAP is 10 times (Patent Owner's position) or 100 times (Petitioner's alternative position) its original mass. As discussed below, DuneCraft provides no disclosure at all on the subject of mass absorbency.

§V.A.1; EX1001, 3:46-53 ("SAP's are polymers that can absorb an extremely large amount of liquid relative to their own ***mass***.").

Rather than ***mass***, Petitioner leans on DuneCraft's disclosure about "***size***." Indeed, the crux of Petitioner's argument is that "[t]he package [shown in DuneCraft] says that each spit ball 'grows 200x their ***size***.'" Pet., 23 (citing EX1009, p. 23). From this premise, the Petition performs a sleight of hand, transitioning from ***size*** to ***mass*** as if these two distinct concepts are equivalent:

> One of skill in the art would understand that only a 'super absorbent polymer' would 'expand 200 times when stuck in water,' which is an 'extremely large amount of liquid relative to its own mass' and which is consistent with the ordinary meaning of 'super absorbent polymer.'

Id., 23. But mass and size are not the same. Petitioner does not and cannot credibly argue otherwise, as even the most rudimentary example shows. Take, for instance, a balloon, which expands many times its original size without an equivalent increase in mass.

"Mass," as implicated by the parties' "super absorbent polymer" constructions, relates to the ***quantity of matter*** contained by a given body, often measured in terms of weight. *See* EX2006, p. 3 (providing a physics definition of "mass" as "a physical quantity expressing the amount of matter in a body"). In the context of DuneCraft, "size" connotes something different—a ***dimensional***

measurement of the body. For example, DuneCraft expresses "size" in terms of "diameter." EX1007, p. 26 ("Dimensions: Spitballs grow to about 0.6" in diameter (the longer they absorb water, the bigger they grow).").

"Because the hallmark of anticipation is prior invention, the prior art reference—in order to anticipate under 35 U.S.C. § 102—must not only disclose all elements of the claim within the four corners of the document, but must also disclose those elements arranged as in the claim." *Net MoneyIN, Inc. v. VeriSign, Inc.*, 545 F.3d 1359, 1369 (Fed. Cir. 2008). Although claim language need not appear *ipsissimis verbis* in the allegedly anticipating prior art, there must be "strict identity." *Trintec Indus., Inc. v. Top-U.S.A. Corp.*, 295 F.3d 1292, 1296 (Fed. Cir. 2002) (explaining that the "test for novelty" requires "strict identity").

Petitioner has not shown that DuneCraft passes the "strict identity" test. The '683 Patent's claims require "super absorbent polymer" ammunition. As Petitioner and Dr. Grune concede, a "super absorbent polymer" is a polymer that can absorb a certain amount of liquid relative to its own ***mass***. DuneCraft, on the other hand, merely discloses an unidentified "polymer" that "grow[s] up to 200 times [its] original ***size***"—e.g., "to about 0.6" in diameter." EX1007, p. 26. Petitioner does not even attempt to fill the gap between size and mass. And, even if Petitioner had tried to do so, the law on anticipation leaves no room for such gap filling. Simply put, DuneCraft does not expressly disclose the claimed "super absorbent polymer."

3. Petitioner does not allege, and DuneCraft does not provide, inherent disclosure of SAPs

Absent an express disclosure, inherency would be Petitioner's last hope. But inherency is beyond the scope of this proceeding because the Petition does not invoke an inherency theory. *See In re Magnum Oil Tools Int'l, Ltd*., 829 F.3d 1364, 1381 (Fed. Cir. 2016) ("[W]e find no support for the PTO's position that the Board is free to adopt arguments on behalf of petitioners that could have been, but were not, raised by the petitioner during an IPR."). Even so, Petitioner could not have prevailed on inherency by alleging that "only a 'super absorbent polymer' would 'expand 200 times when stuck in water.'" Pet., 23 (citing EX1003, ¶83).

For one, the problem remains that Petitioner's assertion, inherency or not, addresses the wrong construct—size instead of mass. Moreover, even setting that deficiency aside, Petitioner's assertion fails for lack of adequate explanation and evidentiary support. Petitioner and Dr. Grune do not explain why it is ***necessarily true*** that "only" a super absorbent polymer, meets the size description in DuneCraft. *In re Montgomery*, 667 F.3d 1375, 1379 (Fed. Cir. 2012) ("A reference may anticipate inherently if a claim limitation that is not expressly disclosed is 'necessarily present, or inherent, in the single anticipating reference.'" (quoting *Verizon Servs. Corp. v. Fibernet Va., Inc.*, 602 F.3d 1325, 1337 (Fed. Cir. 2010))). "[J]ust saying that something is so does not make it true," *Dominion Energy, Inc. v.*

Alstom Grid LLC, 725 F. App'x 980, 986 (Fed. Cir. 2018), and conclusory expert testimony like Dr. Grune's that "adds little to the conclusory assertion for which it is offered to support . . . is entitled to little weight," *Xerox Corp. v. Bytemark, Inc.*, IPR2022-00624, Paper 9 at 15 (PTAB Aug. 24, 2022) (precedential).

Regardless, even if DuneCraft's unidentified polymer ***might*** be a "super absorbent polymer," which Petitioner has not shown, that still would not be enough to prove inherency. "The mere fact that a certain thing ***may*** result from a given set of circumstances is not sufficient." *Cont'l Can Co. v. Monsanto Co.*, 948 F.2d 1264, 1269 (Fed. Cir. 1991) ("Inherency, however, may not be established by probabilities or possibilities.").

B. The Grune Declaration is Entitled to Little or No Weight [All Grounds]

Petitioner's expert, Dr. Grune, holds academic degrees in chemistry and mechanical engineering, but he does not possess the pertinent level of skill in this case. He lacks experience with projectile launchers, a keystone of the '683 Patent, and thus, his testimony regarding a POSITA's knowledge and state of mind on this subject cannot be credited.

1. Petitioner misidentifies the level of ordinary skill

Petitioner identifies two categories of individuals who qualify as a POSITA: "(i) an individual with a Bachelor's degree in Industrial Design or Mechanical

Engineering; or (ii) a toy designer with at least five years' experience designing toys (including launchers), with both of (i) and (ii) being or having access to a chemist knowledgeable regarding super absorbent polymers." Pet., 6 (citing EX1003, ¶47).

For at least the following reasons, the Board should reject Petitioner's level of skill articulation, specifically the POSITA Category (i).

First, neither Petitioner nor Dr. Grune explain why their proposed skill level is the appropriate "prism or lens through which . . . the Board [should] view[] the prior art and the claimed invention." *Okajima v. Bourdeau*, 261 F.3d 1350, 1355 (Fed. Cir. 2001). They simply state their position as if it is undisputed or self-evidently correct. It is neither one.

Petitioner initiated this IPR with full knowledge from the parallel ITC investigation that **(A)** Patent Owner disagrees with Petitioner's skill level; and **(B)** Dr. Grune does not meet the level of skill under Patent Owner and Staff's respective counter-proposals (*see infra*, Section V.B.2). Patent Owner and the ITC Staff have proposed that a POSITA would have had "***experience designing projectile launching systems***." EX2003, p. 11; *see also* EX2007, p. 7. Critically, the POSITA Category (i) in Petitioner's level of skill requires ***no projectile launcher experience at all***, hardly a surprise given Dr. Grune's academic and professional background (*see infra*, Section V.B.2). Pet., 6. Petitioner, the party bearing the burden of proof on all issues, has no excuse for failing to explain and substantiate its assertion of

such a low skill level under the circumstances.

The level of skill dictates whether Dr. Grune's testimony can be credited (*see infra*, Section V.B.3), and it is a disputed issue of which Petitioner was well aware. This missing proof is a critical failing in Petitioner's case-in-chief.

Second, Petitioner's POSITA Category (i) is demonstrably wrong. As Petitioner concedes, projectile launchers are fundamental to the '683 Patent. *See* Pet., 7 ("More particularly, ***the present patent document relates to soft-projectile launching devices*** that launch super absorbent polymer projectiles." (quoting EX1001, 1:12-16)). To wit, projectile launchers are featured in every part of the '683 Patent—the title, field of invention, summary, written description, drawings, and claims. *E.g.*, EX1001, Title ("***Soft-Projectile Launching*** Device"), 1:12-16 ("Field[:] The ***present patent document relates to soft-projectile launching devices***, such as projectile toys. More particularly, the ***present patent document relates to soft-projectile launching devices*** that launch super absorbent polymer projectiles and related devices and methods."), 9:38-40 ("What is claimed is: 1. A projectile launching system, comprising . . ."). And yet, the POSITA Category (i) of Petitioner's skill level proposal does not require ***any*** academic or professional experience (or even access to a team member experienced) with projectile launchers.

"[A]n individual with a Bachelor's degree in Industrial Design or Mechanical Engineering," (Pet., 6), is not necessarily skilled with projectile launchers. Petitioner

does not make this allegation, and it should not be assumed. Industrial engineering and mechanical engineering are broad disciplines. At the Bachelor's level, students grasp general principles and theory, with no planned focus on specific real-world applications, such as projectile launchers. For example, a Bachelor's degree in mechanical engineering at Duke University, Dr. Grune's alma mater, predominantly features fundamental courses in calculus, physics, chemistry, dynamics, fluid mechanics, and thermodynamics. EX2008, p. 27. As shown in the table below, none of the three "design" courses in Duke University's mechanical engineering program are described as featuring projectile launchers.

Design Course (EX2008, p. 27)	**Course Description (EX2009, pp. 1-3)**
ME 321L Analysis for Mechanical Design	**ME 321L(131).** Mechanical Engineering Analysis for Design. Calculation of 3D stresses, strains, and deflections encountered in mechanical designs. Types of problems include: curved beams, contact stresses, press/shrink fits, etc. Reliability and uncertainty analysis, failure theories, fatigue, and fracture mechanics. Computational methods of analysis, such as finite elements analysis are covered.
ME 421L Mechanical Design	**ME 421L(141L).** Mechanical Design. A study of practical aspects of mechanical design including conceptualization, specifications, and selection of mechanical elements.

	The design and application of mechanical components such as gears, cams, bearings, springs, and shafts. Practice in application of process through design projects.
ME 424L Mechanical Systems Design	**ME 424L(160L).** Mechanical Systems Design. An integrative design course addressing both creative and practical aspects of the design of systems. Development of the creative design process, including problem formulation and needs analysis, feasibility, legal, economic and human factors, aesthetics, safety, synthesis of alternatives, and design optimization. Application of design methods through several projects including a term design project.

It strains credulity that the level of ordinary skill for a patent entitled "Soft-Projectile ***Launching*** Device" would include individuals having no meaningful experience with projectile launchers. But this is what Petitioner's POSITA Category (i) permits. The Board should reject this aspect of Petitioner's proposal. Specifically, the Board should find that any reasonable articulation of the level of skill for the '683 Patent—including Petitioner's POSITA Category (i)—must include some meaningful experience designing projectile launchers or an equivalent amount of academic study on this subject.

2. Dr. Grune is not a POSITA under any reasonable articulation of the ordinary skill level for the '683 Patent

Dr. Grune admitted at his deposition in the co-pending ITC Investigation that he "***ha[s] no experience at all designing projectile launching systems***." EX2005, p. 11. Dr. Grune's resume confirms as much. And, as noted below, he has already been excluded in another proceeding as an expert in "firearms" because a district court found he did not qualify as a POSITA.

Dr. Grune "received both an AB degree in Chemistry and a BSME (Mechanical Engineering) degree from Duke University, an MSChE (Chemical Engineering) at the University of Massachusetts—Amherst, and a PhD in Chemical Engineering at NC State University." EX1003, ¶6. As discussed, a Bachelor's degree in mechanical engineering alone does not indicate that Dr. Grune has any academic experience with projectile launchers.

He has had a varied work career, none of which has to do with the subject matter of this patent. Dr. Grune conducted research and development on "liquid crystal polyester polymers and fibers at Fiber Industries Inc." EX1003, ¶6. "Later [he] was employed with ABB Corporation where [he] continued working with and developing new polymer systems." *Id*. Then, "[a]s an employee of Mitsubishi Chemical America," Dr. Grune "was a development manager in for [sic] the field of electrophotography." *Id*. "Later as a Praxair (now Linde) employee [he] was

involved in all aspects of new polymer technology." *Id*. After completing his doctorate in Chemical Engineering, Dr. Grune "went to work for ABB Corporation's newly built Transmission Technology Institute," where he used his "expertise to develop process economic downsizing for drying distribution transformer production lines." *Id*., ¶7. Dr. Grune also claims that his "mechanical engineering degree and expertise has been used over the course of [his] career to include many different aspects of making new and existing polymer base products"—not projectile launchers. *Id*., ¶8. For example, he founded a website that sells "hangover block & liver cleanse" and "silver supplements," which have nothing to do with projectile launchers. EX2010, pp. 1, 5, 18.

None of Dr. Grune's documented education or work experience pertains to projectile launchers. Thus, he does not fit the bill under any reasonable articulation of the ordinary skill level for the '683 Patent.

3. <u>Dr. Grune's testimony cannot be credited</u>

"To offer expert testimony from the perspective of a skilled artisan in a patent case—like for claim construction, validity, or infringement—a witness must at least have ordinary skill in the art. Without that skill, the witness' opinions are neither relevant nor reliable." *Kyocera Senco Indus. Tools, Inc. v. ITC*, 22 F.4th 1369, 1376-77 (Fed. Cir. 2022). Accordingly, while the Board has "broad discretion to assign weight to be accorded expert testimony," (*Consolidated Trial Practice Guide* at p.

35), Dr. Grune's testimony relating to projectile launchers is "neither relevant nor reliable" because he lacks the requisite (or any) skill regarding projectile launchers. *Kyocera*, 22 F.4th at 1376-77; *Incyte Corp. v. Concert Pharm., Inc.*, PGR2021-00006, Paper 68 at 7-8 (PTAB May 11, 2022) (finding an expert unqualified to testify from the vantage point of a POSITA on certain topics); *Avail Medsystems, Inc. v. Teladoc Health, Inc.*, IPR2022-00444, Paper 10 at 25-26 (PTAB Jul. 21, 2022) ("it would be inappropriate for us to consider any testimony by [the non-POSITA expert] on any issue that is analyzed through the lens of an ordinarily skilled artisan").

Dr. Grune's testimony was recently excluded under similar circumstances. In *Plate, LLC v. Rctenn, LLC*, 3:18-cv-806 (M.D. Tenn. Feb. 18, 2021), a district court excluded Dr. Grune's invalidity opinions regarding patents related to firearms, firearms accessories, and ammunition magazines. EX2011, pp. 5-8. After noting that the "Field of the Invention" section in the asserted patents described firearms, the court in *Plate* held that "Dr. Grune's bachelor's degree in mechanical engineering, and master's and doctorate degrees in chemical engineering and experience and skill are insufficient to qualify him as a PHOSITA in ***this*** litigation." EX2011, p. 8 (original emphasis).

Dr. Grune's testimony should not be credited here for the same reasons it was excluded in *Plate*. Here, as in *Plate*, the field of invention, and the patent as a whole,

relates to subject matter in which Dr. Grune's credentials are insufficient, i.e., projectile launchers. *See* '683 Patent at 1: 10-13 ("Field[:] The present patent document relates to ***soft-projectile launching devices***…"). Indeed, a firearm is a type of projectile launcher, and as the court in *Plate* noted, this is a topic on which general degrees in mechanical engineering and chemical engineering are insufficient to confer the requisite expertise.

Critically, Petitioner relies solely on Dr. Grune's testimony as proof of several dispositive fact issues regarding projectile launchers. *See*, *e.g.*, Pet., 24 (citing EX1003, ¶ 86); *id*., 32 (citing EX1003, ¶109); *id*., 35 (citing EX1003, ¶114); *id*., 40 (citing EX1003, ¶124); *id*., 42 (citing EX1003, ¶129); *id*., 44-45 (citing EX1003, ¶134). When Dr. Grune's testimony is set aside on these issues, as it should be, much of the Petition boils down to bare attorney argument, which the Board should reject. *E.g*., *Teoxane SA v. Allergan, plc*, IPR2017-01906, Paper 15 at 26 (PTAB Mar. 9, 2018) ("We are not persuaded that bare attorney argument . . . is sufficient to show that claim 22 would have been obvious . . . Accordingly, we decline to institute trial based on that challenge.").

C. DuneCraft does not anticipate—it lacks "[a] projectile launcher for launching the ammunition" [Ground 1]

The '683 Patent is all about "soft-projectile launching devices that launch super absorbent polymer projectiles." EX1001, 1:12-16; *see also* Pet., 7 (citing the

same). Like super absorbent polymers, the projectile launcher is fundamental to the '683 Patent, and it is expressly recited throughout the Challenged Claims, including the final limitation of independent claim 1. EX1001, 9:41-43. DuneCraft lacks this fundamental feature—it does not disclose "a projectile launcher for launching the ammunition."

Rather than ammunition for a projectile launcher, Spit Balls are described as objects that are "Fun to ***Throw***," (EX1009, p. 23). DuneCraft never says that Spit Balls are compatible with a launcher, and Petitioner's suggestion that a fictitious cartoon on the product packaging shows otherwise lacks merit. Petitioner's alternative assertion that a human hand and arm somehow comprise a projectile launcher is equally untenable. It lacks evidentiary support, misinterprets the '683 Patent, and defies the plain claim language.

For all these reasons, each detailed below, the Board should reject Petitioner's assertions and deny *inter partes* review.

1. <u>A human arm is not "a projectile launcher for launching the ammunition"</u>

DuneCraft says Spit Balls are configured to be thrown by a human user. On this point, everyone agrees. *See* Pet., 21. Where the parties diverge is on Petitioner's further argument that a human arm is a "projectile launcher":

> One of skill in the art would understand that throwing a Spit Ball requires ***a "projectile launcher" in the form of a hand and arm***,

> especially in view of the specification's broad definition of "projectile launcher." [EX1003, ¶86].

Pet., 24. This human-arm theory suffers three fatal flaws.

First, Petitioner's theory lacks evidentiary support. The only corroborating evidence cited in the Petition is Dr. Grune's declaration, but Dr. Grune has no meaningful experience with projectile launchers and is not qualified to testify from the perspective of a POSITA on this point. *See supra*, § V.B; *Kyocera*, 22 F.4th at 1376-77. Dr. Grune's testimony should also be discounted because it mirrors the Petition and "adds little to the conclusory assertion for which it is offered to support." *Xerox Corp*., IPR2022-00624, Paper 9 at 15. Like the Petition, Dr. Grune does not explain ***how*** or ***why*** a POSITA lacking hindsight bias would have considered a human arm to be a type of "projectile launcher." And because Dr. Grune's testimony is not credible, Petitioner's human-arm theory collapses to attorney argument, which "is no substitute for evidence" for the party bearing the burden. *Enzo Biochem v. Gen-Probe, Inc*., 424 F.3d 1276, 1284 (Fed. Cir. 2005).

Second, Petitioner's human-arm theory misinterprets the '683 Patent. The purported "broad definition of 'projectile launcher'" hurts Petitioner's theory more than it helps. In fact, Petitioner makes the case against itself in the Petition:

> The specification describes a projectile launcher broadly, noting that a ***"projection device 10 can be a bow, crossbow, sling shot, handgun,***

> ***machine gun, futuristic weapon, catapult, or shaped as any other type of weaponry***." Ex. 1001, 5:10-13. The 683 patent also explains that a ***"projection device" is the same as a "projectile launcher"***: "projection device 10, which in the present embodiment is a projectile launching toy." Ex. 1001, 5:4-5; *also* 6:38-39, 7:67-8:1; Ex. 1003, ¶85.

Pet., 23-24. As Petitioner concedes, the common thread that binds the '683 Patent's exemplary projectile launchers is that they are all "devices" shaped like "weaponry." Each of the listed weaponry-shaped devices are operated by humans, not part of the human body like an arm. To be clear, there is no description of a projectile launcher in the '683 Patent that is a human arm.

Third, Petitioner's human-arm theory is inconsistent with the plain claim language. Just as the specification describes, the term "launcher" is used in common parlance when referring to a "device" for launching things. *E.g.*, EX2012, p. 3 (defining the term "launcher" as "any installation, vehicle, or other ***device for launching*** rockets, missiles, or other projectiles"). Petitioner does not provide any evidence or argument as to why this term—"launcher"—should be interpreted more broadly than its ordinary meaning. Nor does Petitioner attempt to prove with evidence that the ordinary meaning of "launcher" encompasses human body parts.

Equating a human arm to the '683 Patent's "projectile launcher" is creative but not credible. Attorney argument cannot override sound evidence, and the intrinsic evidence cuts against Petitioner's human-arm theory.

2. A tube is also not "a projectile launcher for launching the ammunition"

As an alternative to its human-arm theory, Petitioner contends that DuneCraft discloses a "cylindrical tube to show spitballs," and "[o]ne of skill in the art would know that a spit ball tube is 'for launching the ammunition in free flight.'" Pet., 24-25. But a tube is no more a "projectile launcher" than a human arm. Thus, Petitioner's alternative mapping also fails.

By its own terms a "projectile launcher" connotes a device that is configured to launch projectiles. In other words, a "projectile launcher" must itself be capable of launching a projectile, such that the ammunition is launched in free flight from the launcher. This is true of all the exemplary projectile launchers disclosed in in the '683 patent's specification. EX1001, 5:10-13 ("projection device 10 a bow, crossbow, sling shot, handgun, machine gun, futuristic weapon, catapult, or shaped as any other type of weaponry"). However, it is not true of a mere tube.

There is no state in which a tube is capable of launching the projectile. Instead, something ***completely exogenous*** to the tube does the launching—i.e., a human blowing on the projectile. Petitioner does not argue otherwise. In fact, Petitioner does not explain its mapping of a "tube" to the claimed "projectile launcher" at all. The analysis in the Petition is utterly conclusory, as is the cited passage of Dr. Grune's declaration. *See* Pet., 24-25 (citing EX1003, ¶¶87-88). Here,

as elsewhere, Petitioner's conclusory analysis is unmoored from common sense and unsupported by the evidence.

3. DuneCraft does not depict launching the Spit Balls polymer product through a tube

Even if a "tube" were (improperly) considered a "projectile launcher," Petitioner would still fail to make its case. Whether "[t]he DuneCraft Spit Balls' packaging shows a ***cartoon child using a cylindrical tube to shoot spitballs***" is not the relevant question. Pet., 24 (citing EX1003, ¶87). The "***cartoon*** . . . spitballs" on the packaging, (Pet., 24-25), are not what Petitioner (incorrectly) equates to the claimed SAP projectile ammunition (*id*., 22-23). For the SAP-limitation, Petitioner relies on DuneCraft's description of the product within the packaging as "Spit Balls" made of "spherical polymers." EX1007, p. 26; Pet., 22-23.

The missing ingredient in Petitioner's case-in-chief is some objective proof that the Spit Balls polymer product is configured to be used just like the "***cartoon*** . . . spitballs" on the packaging.[5] Pet., 24. But here, as elsewhere, Petitioner makes no attempt to support its unstated inferential leap with evidence or cogent

[5] We use the term "Spit Balls polymer product" when referencing the product described by DuneCraft as "spherical polymers." We use the term "spitballs" when referencing the cartoon on the product packaging.

explanation, and Dr. Grune merely parrots back the same conclusory analysis. Regardless, even setting these deficiencies aside for sake of argument, the record would have refuted any attempt by Petitioner to equate the Spit Balls polymer product with the cartoon spitballs.

First, a visual inspection of the product packaging in DuneCraft (annotated, right) shows that **the Spit Balls polymer product** and **the cartoon spitballs** are fundamentally different. EX1009, p. 25.

As is clear from the packaging, the purpose of the cartoon spitball is to accentuate the product name—"Spit Balls." The name and the concomitant cartoon are part of a marketing ploy that promotes the product as a novelty item mimicking the classic spitball prank made from a wad of paper wetted by human spit. The cartoon is fictional and obviously not a representation of the Spit Balls polymer product, which has no connection to human spit. An image of the Spit Balls polymer product is shown at the bottom of the package. The "spherical polymers," (EX1007,

p. 26), are translucent and have smooth round surfaces.

EX1009 (excerpt)
Spit Balls Product

In contrast to the Spit Balls polymer product image, the cartoon spitball resembles a wet wad of paper. It has an irregular surface, as shown by the jagged edges and the intermittent splotches of gray within its otherwise white body, and it is surrounded by what appears to be a fluid substance (likely representative of human spit).

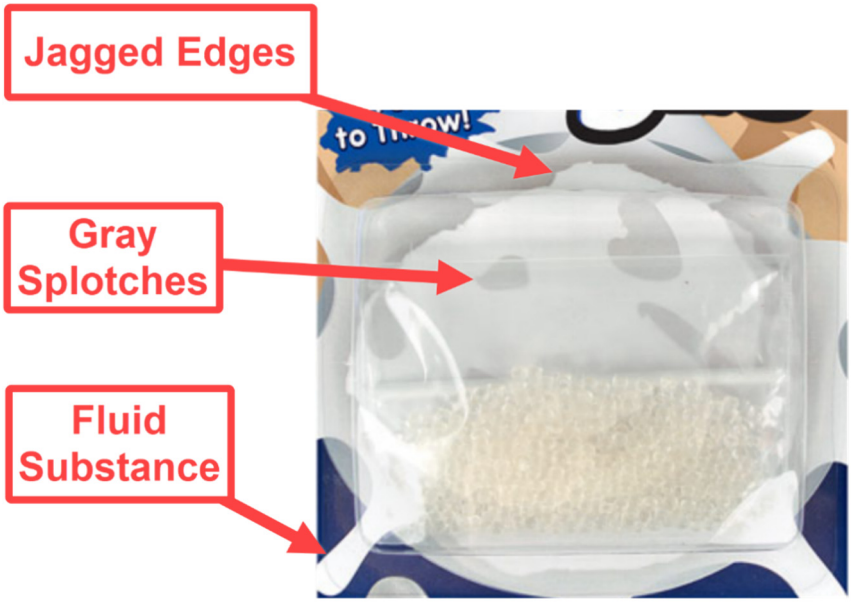

EX1009 (excerpt)
Cartoon Spitball

Second, unlike the fictional cartoon of launching paper spitballs through a tube, DuneCraft repeatedly states that the Spit Balls polymer product is configured to be thrown. There are five separate instances where DuneCraft instructs users to "throw" or "chuck" the Spit Balls polymer product. EX1007, p. 26 ("Grow em and ***chuck em***!"), ("If you ***throw them*** gently, they will bounce. If you ***throw them*** hard enough, they will explode into mushy pieces."), (Spitballs - grow 'em and ***throw 'em***."), ("depending on the force you ***throw them***"); EX1009, p. 23 ("Fun to ***Throw***"). On the other hand, there is not a single reference to any "tube." Nor is a physical tube included in the packaging with the Spit Ball polymer product. If Spit Balls were configured to be launched from a tube, it would make sense to include such a tube in the packaging or, alternatively, to inform users as to what type of tube might be suitable for launching Spit Balls. These telltale signs of Petitioner's launch-tube theory are conspicuously absent.

D. Petitioner provides no legitimate reasons to combine DuneCraft with Rappaport or Illuzi [Grounds 2 and 3]

Petitioner's motivation analysis is deeply flawed, both in law and in fact. To start, Petitioner did not bring to bear reliable testimony from the vantage point of a skilled artisan. Dr. Grune has no experience designing projectile launchers and is, thus, not qualified to opine on whether a person of skill would have employed DuneCraft's Spit Balls in the guns described by Rappaport and Illuzi. Equally

troubling, Petitioner's alleged improvements of increased "safety" and "environmental friendl[iness]" are not credible on their face and are belied by Petitioner's own evidence. With no hope of establishing expected advantages or improvements, Petitioner resorts to generic "simple substitution" and "obvious to try" rationales, failing to realize that those buzzwords do not replace the requirement to explain ***why*** a person of skill would have been motivated to make or try the purported substitution. These shortcomings doom Grounds 2 and 3 of the Petition.

1. Dr. Grune's ineffective testimony on projectile launchers cannot substantiate Petitioner's motivation arguments

Petitioner's motivation analysis is built on a variety of assertions about what a POSITA allegedly would have known about projectile launchers, namely toy guns, at the time of the '683 Patent. In many instances, the sole evidence proffered to support these assertions is Dr. Grune's declaration. But, again, Dr. Grune has no experience on this subject and is, therefore, not qualified to testify from the POSITA's perspective.

To illustrate, because Dr. Grune "ha[s] ***no experience at all*** designing projectile launching systems," (EX2005, p. 11), he cannot opine credibly that "***[t]he Rappaport gun also would work exactly the same*** if its [sponge-like] pellets . . . were substituted with DuneCraft's [] Spit Balls," (EX1003, ¶124). With no pertinent design experience, Dr. Grune could not know whether DuneCraft's "squishy" Spit

Balls—which "explode into mushy pieces on impact," (EX1007, p. 26)—could withstand the force of being struck at "high velocity" by the "launching bolt" in Rappaport's firing mechanism (EX1006, 4:22-28).

Dr. Grune lacks sufficient expertise to know whether Rappaport's gun would "work *exactly* the same" with Spit Balls instead of sponge-like pellets

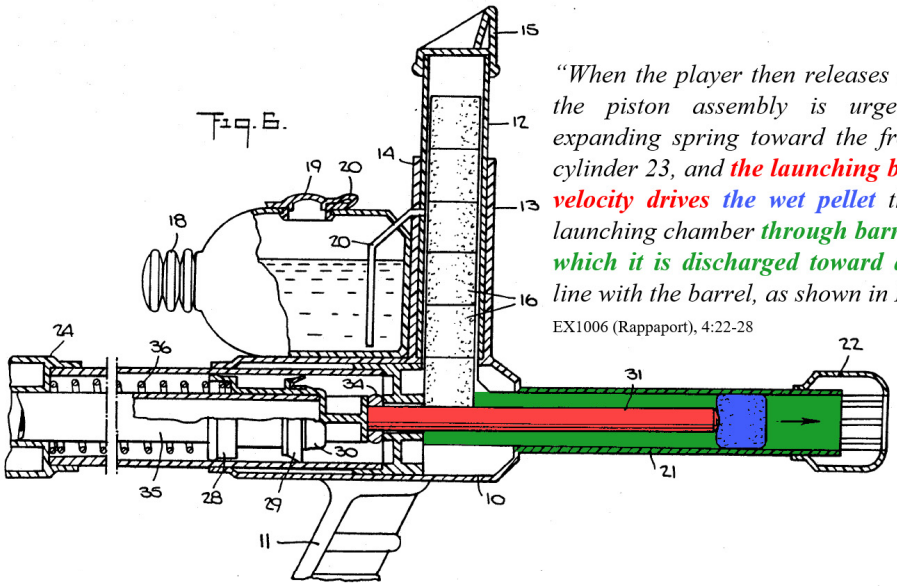

"When the player then releases handle 25, the piston assembly is urged by the expanding spring toward the front end of cylinder 23, and ***the launching bolt at high velocity drives the wet pellet*** *then in the launching chamber* ***through barrel 21 from which it is discharged toward a target*** *in line with the barrel, as shown in FIG. 6."*

EX1006 (Rappaport), 4:22-28

"They are slimy and ***squishy****."*

"[They] will bounce and/or ***explode into mushy parts on impact*** *(depending on the force you throw them)."*

EX1007 (DuneCraft), p. 26

Dr. Grune's conclusion also lacks credibility because he does not analyze the impact of using two different types of ammunition that are hydrated in fundamentally different ways. *See* EX1003, ¶124. In Rappaport's original design, dry pellets are loaded and ***wetted while held on the gun***. EX1006, 3:26-41, 4:30-

35. On the other hand, Petitioner's proposed modification requires ***soaking Spit Balls in water overnight***. EX1007, p. 26. Dr. Grune does not attempt to explain, and is not qualified to explain, how Spit Balls could be hydrated while held on the gun, as in Rappaport's original design. Without such an explanation, there is no basis to conclude that "[t]he Rappaport gun also would work ***exactly the same*** if its [sponge-like] pellets . . . were substituted with DuneCraft's [] Spit Balls," (EX1003, ¶124).

Dr. Grune also offers unqualified opinions regarding the "safety" concerns that he says are "a major issue for toys." EX1003, ¶113. Once more, Dr. Grune admittedly lacks expertise on the subject of projectile launcher design. *E.g.*, EX1003, ¶¶6-10; EX1004. Moreover, his declaration and *curriculum vitae* make no mention of meaningful experience with evaluating the relative safety of consumer products. He is therefore not qualified to opine as to whether launching Spit Balls through a tube[6] or with the Rappaport/Illuzi gun better addresses "safety" concerns. EX1003, ¶112; *see also generally id.*, ¶¶108-112; Pet., 34 ("One of skill in the art would understand these safety problems and seek to improve these projectile

[6] As discussed above and below, DuneCraft does not actually disclose launching the Spit Balls polymer product from a tube.

systems. Ex. 1003, ¶112."). Rappaport, for example, explains that there are safety concerns with firing projectiles at children. In fact, Rappaport goes so far as to state that projectiles "capable of inflicting ***even slight injury*** . . . are ***not acceptable***." EX1006, 1:14-20. Unsurprisingly, Dr. Grune's uninformed "safety" analysis gives no thought to whether and to what degree Spit Balls are capable of "inflicting even slight injury" to a child when fired from a gun. Nor does Dr. Grune consider whether his posited risk to the user of inhaling a Spit Ball through a tube would outweigh the risk to the target when struck with a high-velocity Spit Ball.

These examples are illustrative of a fatal flaw with Petitioner's motivation analysis: "Without [the ordinary level of] skill, [Dr. Grune's] opinions are neither relevant nor reliable." *Kyocera*, 22 F.4th at 1376-77. And without reliable testimony, Petitioner's analysis about what a POSITA would have known, understood, and been motivated to do is unavailing.

2. <u>DuneCraft-Rappaport</u>

i. Petitioner's "safety issues" do not support the DuneCraft-Rappaport combination

Petitioner stands on a false premise when arguing that "[s]afety issues would motivate one of skill in the art to ***replace DuneCraft's spit ball launching tube*** with a toy gun." Pet., 31. The false premise on which this argument rests is that DuneCraft discloses launching the Spit Balls polymer product through a tube. Pet.,

32 ("DuneCraft shows a tube used to shoot spit balls."). As discussed, DuneCraft provides no such disclosure. *See supra*, §V.C.3 (the cartoon spitballs and tube is not a disclosure of launching the Spit Balls polymer product). There is no tube for launching the Spit Balls product that Petitioner (incorrectly) alleges are a super absorbent polymer. *Id*. Instead, DuneCraft says that Spit Balls are designed to be thrown by a human hand and arm. *Id*.

Regardless, Petitioner's alleged safety issues work against its proffered motivation to combine. If, as Petitioner contends, blowing on Spit Balls through a tube were deemed dangerous to a child user, it would counsel in favor of throwing them, as advertised on the packaging (*supra*, §V.C.1). *See* Pet., 33-35. Firing Spit Balls at high velocity from Rappaport's gun would merely introduce additional safety risk, now also endangering the child being targeted. EX1006 (Rappaport), 1:14-20 (explaining that projectiles "capable of inflicting ***even slight injury*** . . . are ***not acceptable***"). Further still, if Spit Balls were a known inhalation and ingestion hazard, then a POSITA would not have been motivated to replace Rappaport's ammunition with Spit Balls. *Compare* Pet., 33("Inhaling [Spit Balls] could damage a child's airway and lungs" or "absorb additional water from the child's body and increase in size, which can cause serious medical issues.") *with id*., 42 ("The combination sought is simply to substitute DuneCraft's [Spit Balls] for Rappaport's 'sponge like' pellets."). Replacing the sponge-like pellets in Rappaport with

hazardous ammunition would only make Rappaport's gun more dangerous, which a POSITA would not do.

ii. Petitioner's conclusory "simple substitution" theory fails to explain why a POSITA would have been motivated to make the DuneCraft-Rappaport combination

Petitioner misses the mark again when asserting that the "[c]ombin[ation of] Rappaport's toy gun with DuneCraft's Spit Balls requires only a simple substitution of one known element for another to obtain predictable results." Pet., 41. According to Petitioner, DuneCraft and Rappaport each describe absorbent polymer projectiles, and substituting one for the other would have produced predictable results. *See id.*, 41-42. Even if assumed true, these assertions are not enough to prove obviousness.

As a threshold matter, Petitioner's "simple substitution" theory fails because it is not substantiated with evidence and reasoning. Petitioner does not demonstrate or explain how or why it would have been "simple" for a POSITA to "substitute DuneCraft's [Spit Balls] for Rappaport's 'sponge like' pellets." Pet., 42. Not only is Dr. Grune unqualified to opine reliably on this issue, but Petitioner's (and Dr. Grune's) analysis is also fatally conclusory. On the subject of motivation-to-combine, the law requires "specificity" and rejects Petitioner's terse generalizations. *In re Nuvasive, Inc.*, 842 F.3d 1376, 1381–82 (Fed. Cir. 2016); *see also ActiveVideo Networks, Inc. v. Verizon Commc'n, Inc.*, 694 F.3d. 1312, 1328 (Fed. Cir. 2012) (rejecting the generic desire to "build something better" as a proper motivation

rationales); *Expedia, Inc. v. International Business Machines Corp.*, IPR2018-01459, Paper 7 at 27 (PTAB Jan. 29, 2019) (rejecting a Petitioner's "unexplained invocation of a simple substitution").

Regardless, even if the purported substitution were simple (which has not been established), Petitioner's theory would still have a missing ingredient: A reasoned explanation for ***why*** a POSITA would have sought to make the purported substitution. Without answering the ***why*** question, Petitioner has alleged nothing more than that a POSITA ***could have made*** the combination, which the Board has repeatedly stated is insufficient. It is well established that, to prevail on obviousness, the petitioner "needs to sufficiently explain ***why*** a person skilled in the art would have done that" which the claimed invention does. *IBM Corp. v. Rigetti & Co., Inc.*, IPR2020-00496, Paper 10 at 22 (PTAB Aug. 7, 2020). In other words, "obviousness concerns whether a skilled artisan not only *could have made* but *would have been motivated to make* the combinations or modifications of prior art to arrive at the claimed invention." *Belden Inc. v. Berk-Tek LLC*, 805 F.3d 1064, 1073 (Fed. Cir. 2015) (original emphasis); *see also TriVascular, Inc. v. Samuels*, 812 F.3d 1056, 1066 (Fed. Cir. 2016) (it is necessary to explain "***why*** the references would be combined"). Petitioner's assertions do not comport with *Belden*'s "would have been motivated to make" standard. 805 F.3d at 1073.

i. DuneCraft debunks Petitioner's "environmentally friendly" theory: Like Rappaport's pellets, Spit Balls must be collected

Finally, Petitioner asserts that the DuneCraft-Rappaport combination is "better for the environment" because "[u]sing DuneCraft's ammunition in Rappaport's gun would result in an improved gun with disposable, ***biodegradable pellets that did not need to be collected***." Pet., 43-44; *see also id*., 43 (purporting to "improve [Rappaport's] gun [with] environmentally friendly ammunition"). But here, too, Petitioner's reasoning breaks down and contradicts the record evidence.

DuneCraft does not "offer[] a solution" to the alleged problem in Rappaport that users "would need to collect shot pellets or risk polluting the environment," as Petitioner contends. Pet., 44. After all, DuneCraft does not state or imply that Spit Balls are "biodegradable." *Id*. Nor does DuneCraft suggest that Spit Balls "did not need to be collected." *Id*. Quite the opposite. DuneCraft says:

> And here's the best part about Spitballs: when the war is over, ***collect all the whole ones and let them dry out***. They will shrink back to their original state and can be reused at a later date.

EX1007, p. 26. The truth is, to the extent expelled projectiles are an environmental problem, it is a problem shared equally by DuneCraft and Rappaport. It would not have motivated a POSITA to combine the two.

3. DuneCraft-Illuzi

i. Petitioner's DuneCraft-Illuzi arguments fail for the same reasons as DuneCraft-Rappaport

Petitioner incorporates into Ground 3 regarding Illuzi the "safety," "simple substitution," and "environmentally friendly" theories from the Rappaport motivation discussion in Ground 2. *See* Pet., 67-68. As discussed, each of those theories lacks sufficient explanation and evidentiary support. *Supra*, §V.D.2.

ii. "Obvious to try" does not save the DuneCraft-Illuzi combination

According to Petitioner, "it would be obvious to try DuneCraft's polymer balls" based on Illuzi's alleged "disclosure of a soft polymer spherical projectile" because "[t]here are only so many different kinds of soft polymer balls used in the art as projectiles for launching (as shown by Carlson and Cake)." Pet., 68 (citing EX1003, ¶199). But, as before, Petitioner's "obvious to try" case is legally deficient. The Supreme Court endorsed using obviousness to try "[w]hen there is a design need or market pressure to solve a problem." *KSR Int'l Co. v. Teleflex Inc*., 550 U.S. 398, 421 (2007). The "obvious to try" rationale is not an end-run around the requirement to provide an "explicit" analysis regarding the "***apparent reason*** to combine the known elements in the way a patent claims." *Id*. at 418; *see also Rolls-Royce, PLC v. United Techs. Corp*., 603 F.3d 1325, 1339 (Fed. Cir. 2010) ("A particular course or selection is not obvious to try unless some design need or market pressure or other

motivation would suggest to one of ordinary skill to pursue the claimed course or selection."); *Belden*, 805 F.3d at 1073 (the standard is "whether a skilled artisan not only *could have made* but *would have been motivated to make* the combinations" (original emphasis)). As discussed, Petitioner's alleged "safety" and "environmentally friendly" reasons are unpersuasive, and without them, Petitioner's case falls short. "*KSR* buzzwords such as . . . 'obvious to try,' and 'predictable results'" do not establish "***why*** a POSITA would have made this particular change." *AviaGames, Inc. v. Skillz Platform, Inc*., IPR2022-00531, Paper 13 at 24 (PTAB Aug. 4, 2022) (original emphasis).

E. Petitioner does not allege, much less prove, that DuneCraft was publicly accessible [All Grounds]

Petitioner has not established that DuneCraft (EX1007 & EX1009) is prior art. Petitioner's assertions and evidence, if credited, only show that DuneCraft existed on the Internet. Flouting Federal Circuit precedent on public accessibility, Petitioner does not even attempt to show that an ordinarily skilled person would have found DuneCraft on the Internet by exercising reasonable diligence. *E.g.*, *SRI Int'l, Inc. v. Internet Sec. Sys., Inc.*, 511 F.3d 1186, 1194 (Fed. Cir. 2008). Given that DuneCraft is a necessary component of every ground in the Petition, Petitioner's failure to show it is prior art precludes institution.

"[A]t the institution stage, the petition must identify, with particularity, evidence . . . that the reference was publicly accessible before the critical date." *Hulu, LLC v. Sound View Innovations, LLC*, IPR2018-01039, Paper 29 at 13 (PTAB Dec. 20, 2019) (precedential).[7] A document is "publicly accessible" only "upon a satisfactory showing that such document has been disseminated or otherwise made available to the extent that persons interested and ordinarily skilled in the subject matter or art exercising reasonable diligence, can locate it." *SRI*, 511 F.3d at 1194; *accord Blue Calypso, LLC v. Groupon, Inc.*, 815 F.3d 1331, 1348 (Fed. Cir. 2016).

For online web references, a petitioner must provide ***"some evidence that a person of ordinary skill could have reasonably found the website and then found the reference on that website."*** *Samsung Elecs. Co. v. Infobridge Pte. Ltd.*, 929 F.3d 1363, 1369 (Fed. Cir. 2019) (citing *Acceleration Bay, LLC v. Activision Blizzard Inc.*, 908 F.3d 765, 773 (Fed. Cir. 2018)). Despite this black letter law, the

---

[7] *See also Sandoz Inc. v. AbbVie Biotechnology Ltd.*, IPR2018-00156, Paper 11 at 9 (PTAB Jun. 5, 2018) (informative) ("To meet the initial burden of production under *Dynamic Drinkware*, however, the Petition must include argument and direct us to evidence sufficient to show that Petitioner would establish such public accessibility by a preponderance of the evidence during the course of the trial.").

Petition fails to address whether a POSITA could have reasonably found DuneCraft. Even if DuneCraft existed on the Internet, that is not enough because "public accessibility requires more than technical accessibility." *Id*. (quoting *Acceleration Bay*, 908 F.3d at 773).

But "technical accessibility" is all Petitioner purports to address. For example, Petitioner alleges that "DuneCraft's Spit Balls appear on websites at least as early as November 27, 2009." Pet., 10. To support this allegation, Petitioner submits declarations (EX1007 and EX1009) from Nathaniel E. Frank-White, a Records Request Processor at the Internet Archive. The Frank-White declaration explains how the Internet Archive created a service known as the Wayback Machine, which "makes it possible to browse more than 450 billion pages stored in the Internet Archive's web archive." EX1007, p. 1; EX1009, p. 1. According to the Frank-White declaration, the Internet Archive assigns an "extended URL" to archived files that includes date and time information. *Id*. Petitioner appears to rely on the date information in the extended URLs of https://web.archive.org/web/20091127080602/http://www.thinkgeek.com/geektoys/science/cd32/ and https://web.archive.org/web/20091128071922/http://www.thinkgeek.com/geektoys/science/cd32/zoom/ to support its November 27, 2009 allegation.

To the extent Petitioner's URL-based analysis is credible, it merely suggests that DuneCraft existed on the Internet as webpages at the thinkgeek.com website,

i.e., that DuneCraft was "technically accessible." Even if accepted as true, such allegations alone are not sufficient to show ***public accessibility***, which is the relevant legal threshold that Petitioner must clear. *See Acceleration Bay*, 908 F.3d at 773 ("public accessibility requires more than technical accessibility"); *Samsung*, 929 F.3d at 1369 ("some evidence that a person of ordinary skill could have reasonably found the website and then found the reference on that website is critical").

The law provides clear guidance to petitioners for proving public accessibility of web-based references. For example, the Federal Circuit has found the higher threshold of "public accessibility" (not just "technical accessibility") satisfied by evidence that the reference was indexed and could have been located online using certain keyword combinations. *See In re Lister*, 583 F.3d 1307, 1314-17 (Fed. Cir. 2009) (concluding that a reference with a descriptive title was publicly accessible as of the date it was posted on Westlaw, where users "could perform keyword searches"). Alternatively, even without indexing, the Court has found public accessibility based on "unrebutted testimony" indicating that the online reference was "well known" to the community interested in the relevant subject matter. *Voter Verified, Inc. v. Premier Election Sols., Inc.*, 698 F.3d 1374, 1380 (Fed. Cir. 2012).

But here, unlike in *In re Lister*, Petitioner does not allege or seek to prove with evidence that the webpages it relies on were indexed in a "meaningful way," or that the thinkgeek.com website was "well known" to persons interested and ordinarily

skilled in the relevant subject matter or art, like in *Voter Verified*. Indeed, the Petition lacks even a cursory explanation of what type of website thinkgeek.com was, not to mention a reasoned and evidence-based argument for why a skilled artisan would have found these web pages. In this respect, the facts here more closely resemble those in *SRI Int'l*, 511 F.3d at 119 (finding no public accessibility where the reference was "not catalogued or indexed in a meaningful way") and *Blue Calypso*, 815 F.3d at 1350 (finding no public accessibility where and "[t]he record [was] devoid of any evidence that a query of a search engine before the critical date, using any combination of search words, would have led to [the reference] appearing in the search [engine] results").

In short, Petitioner utterly fails to make any allegation to support "that a person of ordinary skill could have reasonably found the website and then found the reference on that website." *Samsung*, 929 F.3d at 1369. And when petitioners do not put forward arguments and evidence to support the public accessibility of online web references, the Board has consistently denied institution.[8] Petitioner's failure

---

[8] *E.g.*, *Google LLC v. IPA Techs. Inc.*, IPR2018-00384, Paper 11 at 15 (PTAB Jul. 3, 2018) (denying institution where "even if we were to assume that [the reference] was available online (i.e., technical availability), Petitioner fails to point to any

to do so here compels the same result—denial.

---

persuasive evidence of public accessibility to the document or the [alleged source] website"); *International Business Machines Corp. v. EnvisionIT, LLC*, IPR2017-01250, Paper 8 at 16 (PTAB Oct. 16, 2017) (denying institution for lack of public accessibility where "[a]t most, Petitioner's evidence . . . establishes that [an individual] posted [the reference] on his website prior to the critical date"); *Celltrion, Inc. v. Biogen, Inc.*, IPR2017-01229, Paper 10 at 20-21 (PTAB Oct. 23, 2017) (denying institution for lack of public accessibility where Petitioner failed to provide evidence that the reference was indexed or that the online source was well known); *Adobe Sys. Inc. v. William Grecia*, IPR2018-00419, Paper 7 at 11-12 (PTAB Jun. 21, 2018) (denying institution for lack of public accessibility and "agree[ing] with Patent Owner" that Petitioner provides "no evidence in the record regarding the [alleged source] website"); *Kingston Tech. Co., Inc. v. Memory Techs., LLC*, IPR2019-00654, Paper 9 at 21-22 (PTAB Aug. 13, 2019) (denying institution for lack of public accessibility because "conspicuously absent is Petitioner's explanation of how an interested and ordinarily skilled person would have arrived at the homepage of [alleged source] website).

VI. CONCLUSION

For all the foregoing reasons, the Petition is fatally deficient. Going forward with a trial would serve only to expend further resources highlighting what is already clear: Petitioner cannot satisfy its burden of proving unpatentability based on the arguments and evidence in the Petition. Patent Owner, therefore, respectfully requests that the Board decline to institute *inter partes* review.

Respectfully submitted,

Date: March 23, 2023

/Kenneth Wayne Darby Jr./
Kenneth W. Darby, Reg. No. 65,068
Jeffrey Shneidman, *pro hac vice* to be submitted
Linhong Zhang, Reg. No. 64,749
Ethan Rubin, Reg. No. 73,940
Fish & Richardson P.C.

Jennifer C. Bailey, Reg. No. 52583
Megan Redmond, *pro hac vice* to be submitted
ERISE IP, P.A.

CERTIFICATION UNDER 37 C.F.R. §42.24(d)

Under the provisions of 37 C.F.R. §42.24(d), the undersigned hereby certifies that the word count for the foregoing Patent Owner's Preliminary Response to Petition totals 10,196, which is less than the 14,000 allowed under C.F.R. §42.24(b)(1).

Respectfully submitted,

Date: March 23, 2023

/Kenneth Wayne Darby Jr./

Kenneth W. Darby, Reg. No. 65,068
Jeffrey Shneidman, *pro hac vice* to be submitted
Linhong Zhang, Reg. No. 64,749
Ethan Rubin, Reg. No. 73,940
Fish & Richardson P.C.

Jennifer C. Bailey, Reg. No. 52583
Megan Redmond, *pro hac vice* to be submitted
ERISE IP, P.A.

CERTIFICATE OF SERVICE

Pursuant to 37 C.F.R. §§42.6(e), the undersigned certifies that on March 23, 2023, a complete and entire copy of this Patent Owner's Preliminary Response and supporting exhibits were provided via email to Petitioners by serving the correspondence email address of record as follows:

Scott Doyle
KELLEY DRYE & WARREN LLP
Washington Harbour, Suite 400
3050 K Street, NW
Washington, DC 20007

Email: njpatentgroup@kelleydrye.com

/Kristyn Waldhauser/
Kristyn Waldhauser
Fish & Richardson P.C.
60 South Sixth Street, Suite 3200
Minneapolis, MN 55402
(612) 638-5731