Designation: F 963 – 07$^{\varepsilon 1}$

An American National Standard

Standard Consumer Safety Specification for Toy Safety[1]

This standard is issued under the fixed designation F 963; the number immediately following the designation indicates the year of original adoption or, in the case of revision, the year of last revision. A number in parentheses indicates the year of last reapproval. A superscript epsilon (ε) indicates an editorial change since the last revision or reapproval.

ε^1 NOTE—Paragraphs 4.39.1 and 5.17 were editorially corrected in June 2007.

INTRODUCTION

The purpose of this consumer safety specification is to establish nationally recognized safety requirements for toys. Although this specification will not eliminate the need for the exercise of parental responsibility in selecting toys appropriate to the age of a child, or parental supervision in situations in which children of various ages may have access to the same toys, its application will minimize accidents in the normal, intended use and reasonably foreseeable abuse of the toys covered by this specification. This specification was developed originally as a Voluntary Product Standard under the auspices of the National Bureau of Standards, Department of Commerce, and published in 1976 (PS 72–76). The present revision is intended to update the safety requirements to include the following by reference: published federal mandatory requirements, relevant voluntary standards, certain new requirements for addressing potential hazards, and several technical revisions based on producer experience with the original standard.

1. Scope

1.1 This specification[2] relates to possible hazards that may not be recognized readily by the public and that may be encountered in the normal use for which a toy is intended or after reasonably foreseeable abuse. It does not purport to cover every conceivable hazard of a particular toy. This specification does not cover product performance or quality, except as related to safety. Except for the labeling requirements pointing out the functional hazards and age range for which the toy is intended, this specification has no requirements for those aspects of a toy that present an inherent and recognized hazard as part of the function of the toy. Such an example is a sharp point necessary for the function of a needle. The needle is an inherent hazard that is well understood by the purchaser of a toy sewing kit, and this hazard is communicated to the user as part of the normal educational process.

1.2 On the other hand, while a riding toy has inherent hazards associated with its use (for example, falling off onto the sidewalk), the possible hazards associated with its construction (sharp edges, exposed mechanisms, etc.) will be minimized by the application of this specification.

1.3 This specification covers requirements and contains test methods for toys intended for use by children under 14 years of age. Different age limits for various requirements will be found in this specification. These limits reflect the nature of the hazards and expected mental or physical ability, or both, of a child to cope with the hazards.

1.4 Articles not covered by this specification are as follows:

Bicycles
Tricycles
Sling shots and sharp-pointed darts
Playground equipment
Non-powder guns
Kites
Hobby and craft items in which the finished item is not primarily of play value
Model kits in which the finished item is not primarily of play value
Crayons, paints, chalks, and other similar art materials in which the material itself or the finished item is not primarily of play value, except that all art materials, whether or not a component of a toy, must comply to

[1] This consumer safety specification is under the jurisdiction of ASTM Committee F15 on Consumer Products and is the direct responsibility of Subcommittee F15.22 on Toy Safety.

Current edition approved March 15, 2007. Published May 2007. Originally approved in 1986. Last previous edition approved in 2003 as F 963 – 03.

[2] Toy Industry Association, Inc. (TIA) sometimes provides its interpretations of this specification through its counsel as a service to its members and others. The TIA's interpretations are not reviewed or approved by ASTM and should be viewed as TIA's alone.

Copyright © ASTM International, 100 Barr Harbor Drive, PO Box C700, West Conshohocken, PA 19428-2959, United States.

SPIN MASTER 2119
Prime Time Toys et al. v. Spin Master, Inc.
IPR2023-01348

LHAMA, in accordance with 4.30.1-4.30.3.

Sporting goods, camping goods, athletic equipment, musical instruments, and furniture; however, toys that are their counterparts are covered. (It is recognized that there is often a fine line between, for example, a musical instrument or a sporting item and its toy counterpart. The intention of the producer or distributor, as well as normal use and reasonably foreseeable abuse, determines whether the item is a toy counterpart.)

Powered models of aircraft, rockets, boats, and land vehicles; however, toys that are their counterparts are covered.

1.5 General guidelines for age labeling toys and toy packaging are contained in Annex A1.

1.6 Information regarding packaging and shipping is contained in Annex A2.

1.7 This consumer safety specification includes the following sections:

Title	Section
Scope	1
Referenced Documents	2
Terminology	3
Safety Requirements	4
Material Quality	4.1
Flammability	4.2
Toxicology	4.3
Electrical/Thermal Energy	4.4
Sound Producing Toys	4.5
Small Objects	4.6
Accessible Edges	4.7
Projections	4.8
Accessible Points	4.9
Wires or Rods	4.10
Nails and Fasteners	4.11
Packaging Film	4.12
Folding Mechanisms and Hinges	4.13
Cords and Elastics in Toys	4.14
Stability and Over-Load Requirements	4.15
Confined Spaces	4.16
Wheels, Tires, and Axles	4.17
Holes, Clearance, and Accessibility of Mechanisms	4.18
Simulated Protective Devices	4.19
Pacifiers	4.20
Projectile Toys	4.21
Teethers and Teething Toys	4.22
Rattles	4.23
Squeeze Toys	4.24
Battery-Operated Toys	4.25
Toys Intended to be Attached to a Crib or Playpen	4.26
Toy Chests	4.27
Stuffed and Beanbag-Type Toys	4.28
Stroller and Carriage Toys	4.29
Art Materials	4.30
Toy Gun Marking	4.31
Balloons	4.32
Certain Toys with Spherical Ends	4.33
Marbles	4.34
Balls	4.35
Pompoms	4.36
Hemispheric-Shaped Objects	4.37
Yo Yo Elastic Tether Toys	4.38
Magnets	4.39
Safety Labeling Requirements	5
Instructional Literature	6
Producer's Markings	7
Test Methods	8
General	8.1
Testing for Hazardous Substance Content	8.2
Method to Dissolve Soluble Matter	8.3
Tests for Cleanliness and Preservative Effectiveness	8.4
Normal Use Testing	8.5
Abuse Testing	8.6
Impact Tests	8.7
Torque Tests for Removal of Components	8.8
Tension Test for Removal of Components	8.9
Compression Test	8.10
Tests for Tire Removal and Snap-in Wheel and Axle Assembly Removal	8.11
Flexure Test	8.12
Test for Mouth-Actuated Toys	8.13
Tests for Toy Chest Lids and Closures	8.14
Projectiles	8.15
Test for Stability of Ride-On Toys	8.16
Stalled Motor Test for Battery-Operated Toys	8.18
Tests for Battery-Powered Ride-On Toys	8.19
Tests for Toys which Produce Noise	8.20
Dynamic Strength Test for Wheeled Ride-On Toys	8.21
Packaging Film Thickness	8.22
Test for Loops and Cords	8.23
Yo Yo Elastic Tether Toy Test Methods	8.24
Magnetic Flux Index	8.25
Identification	9
Age Grading Guidelines	Annex A1
Packaging and Shipping	Annex A2
Design Guidelines for Toys Attached to Cribs or Playpens	Annex A3
Flammability Testing Procedure for Toys	Annex A4
Rationale	Annex A5

1.8 The values stated first are to be regarded as the standard. The values given in parentheses are for information only.

1.9 The following precautionary statement pertains only to the test methods portion, Section 8, of this specification: *This standard does not purport to address all of the safety concerns, if any, associated with its use. It is the responsibility of the user of this standard to establish appropriate safety and health practices and determine the applicability of regulatory limitations prior to use.*

2. Referenced Documents

2.1 *ASTM Standards:*[3]

D 374 Test Methods for Thickness of Solid Electrical Insulation

D 642 Test Method for Determining Compressive Resistance of Shipping Containers, Components, and Unit Loads

D 880 Test Method for Impact Testing for Shipping Containers and Systems

D 999 Test Methods for Vibration Testing of Shipping Containers

D 1193 Specification for Reagent Water

D 2240 Test Method for Rubber Property—Durometer Hardness

D 3421 Practice for Extraction and Determination of Plasticizer Mixtures from Vinyl Chloride Plastics[4]

D 4236 Practice for Labeling Art Materials for Chronic Health Hazards

D 5276 Test Method for Drop Test of Loaded Containers by Free Fall

[3] For referenced ASTM standards, visit the ASTM website, www.astm.org, or contact ASTM Customer Service at service@astm.org. For *Annual Book of ASTM Standards* volume information, refer to the standard's Document Summary page on the ASTM website.

[4] Withdrawn.

F 1313 Specification for Volatile *N*-Nitrosamine Levels in Rubber Nipples on Pacifiers
F 1148 Consumer Safety Performance Specification for Home Playground Equipment
2.2 *ANSI Standards:*[5]
C18.1 American National Standard for Dry Cells and Batteries—Specifications
S1.4 Specification for Sound Level Meters
Z315.1 Safety Requirements for Tricycles
2.3 *Federal Standards:*[6]
15 CFR 1150 Marking of Toys, Look-Alike and Imitation Firearms
16 CFR 1303 Ban of Lead-Containing Paint and Certain Consumer Products Bearing Lead Containing Paint
16 CFR 1500 Hazardous Substances Act Regulations, including the following sections:
1500.3 (c) (6) (vi) Definition of "flammable solid"
1500.14(b) (8) Labeling of hazardous art materials
1500.18 Banned toys and other banned articles intended for use by children
1500.19 Misbranded toys and other articles intended for use by children
1500.44 Method for determining extremely flammable and flammable solids
1500.47 Method for determining the sound pressure level produced by toy caps
1500.48 Technical requirements for determining a sharp point in toys and other articles intended for use by children under 8 years of age
1500.49 Technical requirements for determining a sharp metal or glass edge in toys and other articles intended for use by children under 8 years of age
1500.50-53 Test method for simulating use and abuse of toys and other articles intended for use by children
1500.83 Exemptions for small packages, minor hazards, and special circumstances
1500.85 Exemptions from classification as banned hazardous substances
1500.86 Exemptions from classification as a banned toy or other banned article for use by children
16 CFR 1501 Method for Identifying Toys and Other Articles Intended for Use by Children Under 3 Years of Age which Present Choking, Aspiration, or Ingestion Hazards Because of Small Parts
16 CFR 1505 Requirements for Electrically Operated Toys or Other Electrically Operated Articles Intended for Use by Children
16 CFR 1510 Requirements for Rattles
16 CFR 1511 Requirements for Pacifiers
16 CFR 1610 Standard for Flammability of Clothing Textiles
21 CFR 110 Current Good Manufacturing Practice in Manufacturing, Processing, Packaging, or Holding Human Food
21 CFR 170-189 Food for Human Consumption
21 CFR 700-740 Requirements for Specific Cosmetic Products
21 CFR 73, 74, 81, 82 Color Additives
49 CFR 173.100, 109 Definition of Class C Explosives
SS-T-312B Tile, Floor: Asphalt, Rubber, Vinyl, VinylAsbestos[7]
2.4 *ISO and IEC Standards:*[8]
ISO 3746:1995 Acoustics—Determination of Sound Power Levels of Noise Sources Using Sound Pressure—Survey Method Using an Enveloping Measurement Surface Over a Reflecting Plane
ISO 7779 Acoustics–Measurement of Airborne Noise Emitted by Computer and Business Equipment
ISO 8124–1: 2000 Safety of Toys, Safety Aspects Related to Mechanical and Physical Properties
ISO 11202 Acoustics—Noise Emitted by Machinery and Equipment—Measurement of Emission Sound Pressure Levels at a Work Station and at Other Specified Positions—Survey Method in situ
ISO 11204 Acoustics—Noise Emitted by Machinery and Equipment—Measurement of Emission Sound Pressure Levels at a Work Station and at Other Specified Positions—Method Requiring Environmental Corrections
IEC 60086–2 Primary Batteries: Physical and Electrical Specifications
IEC 61672–1 Electroacoustics—Sound Level Meters—Part 1: Specifications
IEC 61672–2 Electroacoustics—Sound Level Meters—Part 2: Pattern Evaluation Tests

3. Terminology

3.1 *Definitions of Terms Specific to This Standard:*

3.1.1 *A-weighted sound pressure level* (L_{pA})—the sound pressure level obtained by using standardized A-weighting.

3.1.2 *accessible*—(part or component) describing any area of the toy that can be contacted by any portion forward of the collar of the accessibility probe as described in 16 CFR 1500.48 and 16 CFR 1500.49. (See Fig. 1.)

NOTE 1—Dimensions are provided in Fig. 1 for two probes corresponding to two age ranges of children.

3.1.3 *alkaline battery*—a non-rechargeable dry cell battery with an alkaline manganese electrochemistry.

3.1.4 *aquatic toy*—an article, whether inflatable or not, intended to bear the mass of a child and used as an instrument of play in shallow water. This does not include bath toys, beach balls, and United States Coast Guard-approved life saving devices.

3.1.5 *art material*—any substance marketed or represented by the producer or repackager as suitable for use in any phase

[5] Electronic copy available from American National Standards Institute website: www.ansi.org; hard copies from Global Engineering Documents, 15 Inverness Way East, Englewood, CO 80112.

[6] Available from U.S. Consumer Product Safety Commission website: www.cpsc.gov or U.S. Government Printing Office, Superintendent of Documents; P.O. Box 371954, Pittsburgh, PA 15250-7954; website: www.gpo.gov

[7] Available from U.S. Government Printing Office Superintendent of Documents, 732 N. Capitol St., NW, Mail Stop: SDE, Washington, DC 20401, http://www.access.gpo.gov.

[8] Available from International Organization for Standardization (ISO), 1 rue de Varembé, Case postale 56, CH-1211, Geneva 20, Switzerland, http://www.iso.ch.

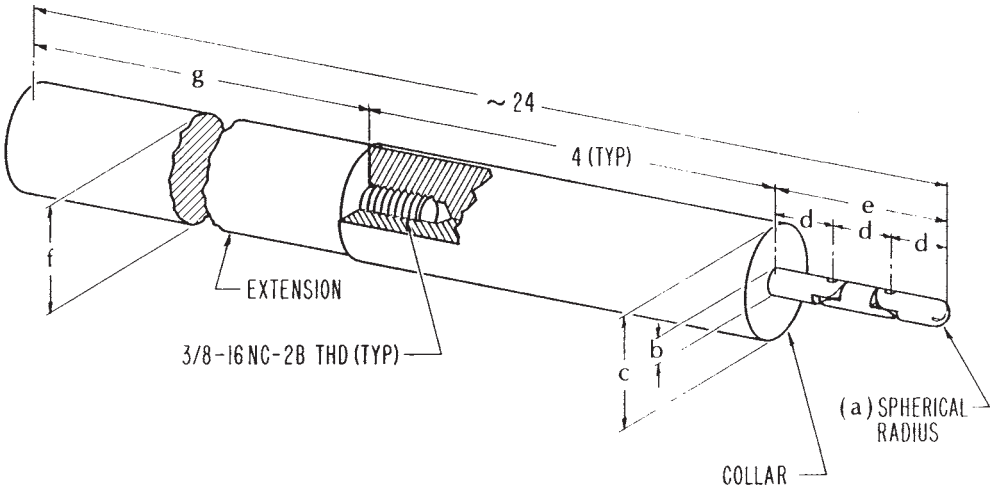

		a	b	c	d	e	f	g
(CHILDREN 0-36 MONTHS INCL)	PROBE A	.110	.220	1.020	.577	1.731	1	18 9/32
(" 37-96 " ")	PROBE B	.170	.340	1.510	.760	2.280	1 1/2	17 25/32

ALL DIMENSIONS IN INCHES

FIG. 1 Accessibility Probes

of the creation of any work of visual or graphic art of any medium. This definition includes items that become a component of the work of art such as paint, canvas, inks, crayons, chalk, solder, brazing rods, flux, paper, clay, stone, thread, cloth, and photographic film. It also includes items that are associated closely with the creation of the final work of art such as brushes, brush cleaners, solvents, ceramic kilns, silk screens, molds, mold making material, and photographic developing chemicals.

3.1.6 *ball*—any spherical, ovoid, or ellipsoidal object that is designed or intended to be thrown, hit, kicked, rolled, dropped, or bounced. The term "ball" includes any spherical, ovoid, or ellipsoidal object that is attached to a toy or article by means of string, elastic cord, or similar tether. The term "ball" also includes any multisided object formed by connecting planes into a generally spherical ovoid, or ellipsoidal shape that is designated or intended to be used as a ball. The term "ball" does not include dice, or balls permanently enclosed inside pinball machines, mazes, or similar outer containers. A ball is permanently enclosed if, when tested in accordance with 16 CFR 1500.53, it is not removed from the outer container.

3.1.7 *battery-operated toy*—toy having at least one function dependent on electricity and powered by batteries.

3.1.8 *burr*—a roughness that may be found at an edge or joint of a toy or component if the material is not severed or finished cleanly.

3.1.9 *button cell battery*—a battery having a diameter greater than its height.

3.1.10 *C-weighted peak sound pressure level (L_{Cpeak})*—the peak sound pressure level obtained when using standardized C-weighting.

3.1.11 *close-to-the-ear toy*—a toy that is intended to be used close to the ear, that is, the sound emitting part of such a toy is normally put against the ear of a child (example—toy telephones that emit sounds from the earpiece).

3.1.12 *collapse*—sudden or unexpected folding of a structure.

3.1.13 *compression spring*—spring which essentially returns to its initial state after compression.

3.1.14 *continuous sound*—any steady-state sound or group of variable sounds greater than one second in duration.

3.1.15 *cord*—a length of slender, flexible material including monofilaments, woven and twisted cord, rope, plastic textile tapes, ribbon, and those fibrous materials commonly called string.

3.1.16 *cosmetics*—any article intended or likely to be rubbed, sprinkled, or sprayed on, introduced onto, or otherwise applied to the human body for cleansing, beautifying, promoting or enhancing attractiveness, or for altering appearance.

3.1.17 *crushing*—injury to part of the body resulting from compression between two rigid surfaces.

3.1.18 *curled edge*—an edge in which the portion of the sheet adjacent to the edge is bent into an arc and forms an angle of less than 90° with the base sheet, as shown in Fig. 2.

3.1.19 *discharge mechanism*—an inanimate system for releasing and propelling a projectile.

3.1.20 *driving mechanism*—assembly of linked parts or components (for example, gears, belts, winding mechanisms), at least one of which moves, powered by a source (for example, electrical or mechanical means) independent of the child.

3.1.21 *edge, hazardous*—an accessible edge that presents an unreasonable risk of injury during the normal use and reasonably foreseeable abuse of a toy. Metal and glass edges on toys

FIG. 2 Curled Edge

intended for children under the age of eight years are defined as potentially hazardous if they fail the sharp edge test described in 16 CFR 1500.49. Edges other than metal and glass are defined as potentially hazardous if they are sharp to the touch under casual handling conditions.

3.1.22 *elastic*—material that will recover its former size and shape essentially and instantaneously after being elongated at least 10 % at a testing speed of not less than 20 in. (510 mm)/min.

3.1.23 *equivalent sound pressure level (L_{Aeq})*—the level of a steady-state sound which, in a stated time period and at a stated location, has the same A-weighted sound energy as the time-varying sound.

3.1.24 *explosive action*—the sudden release of energy characterized by the rapid expansion or bursting of a material.

3.1.25 *extension spring*—spring which essentially returns to its initial state after tension.

3.1.26 *fastener*—mechanical device which attaches two or more elements together (for example, screws, rivets, and staples).

3.1.27 *feathering*—the beveling of an edge (or decrease in thickness moving toward the edge) caused during the shearing or cutting of material.

3.1.28 *flash*—excess material that escapes between the mating parts of a mold assembly.

3.1.29 *folding mechanism*—an assembly of hinged, pivoted, folding, or sliding members that can produce a crushing, scissoring, pinching, or shearing action during operation.

3.1.30 *fuzz*—bits of fibrous-type material that can be readily removed from toys with a pile surface.

3.1.31 *hand-held toy*—a toy that is intended to be used or operated while being held in the hand. Examples include toy tools, small electronic games, stuffed animals, dolls, musical toys, and cap-firing toys.

3.1.32 *hazard*—any characteristic of a toy that presents an unreasonable risk of injury or illness during normal use or as a result of reasonably foreseeable abuse.

3.1.33 *hazardous magnet*—a magnet which has a flux index >50 (refer to test method 8.25) and which is in any of the following shapes and sizes (refer also to Fig. 3):

(*1*) A cylinder with a length of not more than 32 mm and a diameter of not more than 11 mm,

(*2*) A disk with a diameter of not more than 26 mm and a thickness of not more than 5 mm,

(*3*) A sphere with a diameter of not more than 22 mm, or

(*4*) Any solid that will fit entirely within the volume or envelope of any of the above defined shapes.

3.1.34 *hazardous magnet component*—any part of a toy which contains an attached or imbedded magnet that meets the dimensional criteria set forth in 3.1.33 and which has a flux index >50 as determined in accordance with the method in 8.25.

3.1.35 *helical spring*—spring in the form of a coil.

3.1.36 *hemmed edge*—an edge in which the portion of the sheet adjacent to the edge is folded back on the sheet itself through an angle of approximately 180°, so that the portion of the sheet adjacent to the edge is approximately parallel to the main sheet, as shown in Fig. 4.

3.1.37 *hinge-line clearance*—the distance between the stationary portion of a toy and the movable portion along, or adjacent to, a line projected through the axis of rotation, shown as Dimension A in Fig. 5.

3.1.38 *impulsive sound*—any sound that is characterized by a brief excursion of sound pressure significantly exceeding the ambient noise, typically less than one second in duration.

3.1.39 *lap joint*—a joint in which an edge overlaps a parallel surface but is not necessarily attached to it mechanically at all points along the length, as in the examples shown in Fig. 6.

3.1.40 *large and bulky toy*—toy that has a projected base area of more than 400 in.^{2} (0.26 m^2) or a volume of more than 3 ft^3 (0.08 m^3) calculated without regard to minor appendages.

NOTE 2—The base area for toys having permanently attached legs is measured by calculating the area enclosed by straight lines connecting the outermost edge of each leg of the perimeter.

3.1.41 *latex balloon*—any toy or decorative item consisting of a latex bag that is designed to be inflated by air or gas. The

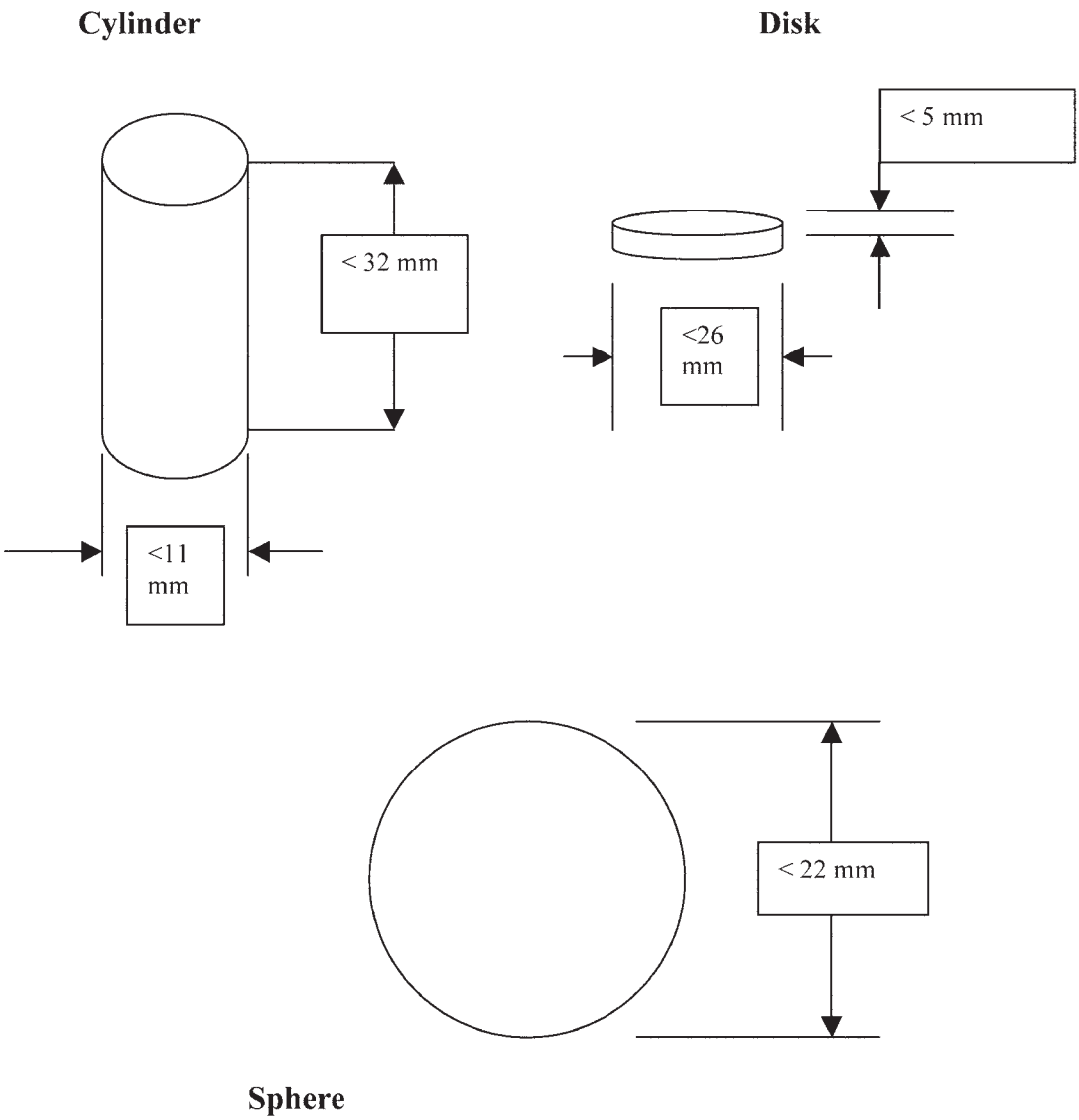

FIG. 3 Hazardous Magnet Shapes and Sizes

FIG. 4 Hemmed Edge

term does not include inflatable children's toys that are used in aquatic activities such as rafts, water wings, swim rings, or other similar items.

3.1.42 *marble*—a sphere made of a hard material, such as glass, agate, marble, or plastic, that is used in various children's games, generally as a playing piece or marker. The term "marble" does not include a marble permanently enclosed in a toy or game. A marble is permanently enclosed if, when tested in accordance with 16 CFR 1500.53, it is not removed from the toy or game.

3.1.43 *maximum A-weighted sound pressure level* (L_{AFmax})—the maximum sound pressure level obtained when using standardized A-weighting and fast detector response (time-weighting).

3.1.44 *non-replaceable battery*—an electrochemical device that will not require user accessibility or user replacement for the expected life of the product or devices it is intended to power. Such batteries will not be accessible when tested in accordance with the normal use and, where appropriate, reasonably foreseeable abuse tests of 8.6 through 8.10.

3.1.45 *normal use*—play modes that conform to the instructions accompanying the toy, that have been established by tradition or custom, or that are evident from an examination of the toy.

3.1.46 *packaging*—material accompanying the toy when purchased, but having no intended play function.

3.1.47 *peak sound pressure level* (L_{Cpk})—the greatest C-weighted instantaneous sound pressure level within the period of observation.

3.1.48 *pinching*—created when two moving or one moving and one fixed surface come together in such a way that they could entrap and compress flesh, usually resulting in a contusion or laceration.

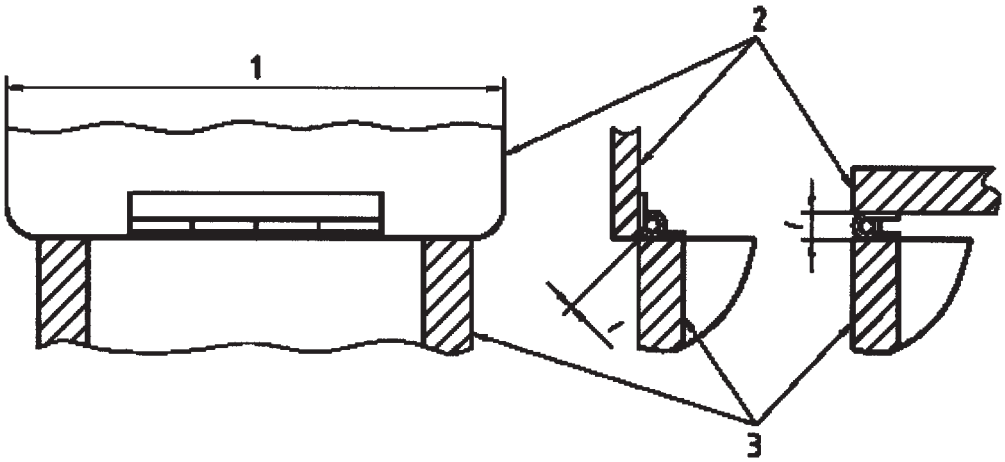

Key

1 Hinge line

2 Lid

3 Box

l = Hinge-line clearance

FIG. 5 Changing Clearance at Hinge Line

FIG. 6 Typical Lap Joints

3.1.49 *point, hazardous*—an accessible point that presents an unreasonable risk of injury during normal use or reasonably foreseeable abuse. Points on toys intended for children under the age of 8 years are potentially hazardous if they fail the sharp point test described in 16 CFR 1500.48.

3.1.50 *pompom*—lengths or strands of fiber, yarns, or threads clamped or secured and tied in the center, and brushed up to form a spherical shape. Also included are spherical-shaped attachments made of stuffed material.

3.1.51 *principal display panel*—the display panel for a retail package or container, bin, or vending machine that is most likely to be displayed, shown, presented, or examined under normal or customary conditions of display for retail sale.

3.1.52 *projectile*—an object propelled by means of a discharge mechanism capable of storing and releasing energy under the control of the operator.

3.1.53 *projection, hazardous*—a projection that, because of its material or configuration, or both, may present a puncture hazard if a child should fall onto it. Excluded from this definition are puncture hazards to the eyes or mouth, or both, because of the impossibility of eliminating puncture hazards to those areas of the body by product design.

3.1.54 *protective cap or cover*—a component that is attached to a potentially hazardous edge or projection to reduce the possibility of injury.

3.1.55 *protective tip*—a component that is attached to the impacting end of a projectile to minimize injury if it should impact on the body, and also to prevent damage to the projectile upon striking a target, provide a means of attaching the projectile to the target as in the case of suction cups, or prevent damage to inanimate objects.

3.1.56 *rattle*—a toy that is clearly designed to emit sound when shaken typically intended for children under 18 months.

3.1.57 *reasonably foreseeable abuse*—conditions to which a child may subject a toy that are not normal use conditions, such as deliberate disassembly, dropping, or using the toy for a purpose for which it was not intended. Simulated use and abuse tests for toys are given in 16 CFR 1500.50, 1500.51, 1500.52, and 1500.53 (excluding the bite test, Paragraph (c), of each section).

3.1.58 *reference box*—a hypothetical surface which is the smallest rectangular parallelepiped that encloses the toy without regard to minor appendages.

3.1.59 *rigid*—any material having a hardness exceeding 70 Shore A scale durometer, as measured by the latest revision of Test Method D 2240.

3.1.60 *rolled edge*—an edge in which the portion of the sheet adjacent to the edge is bent into an arc and forms an angle between 90 and 120° with the main sheet, as shown in Fig. 7.

3.1.61 *simulated protective equipment*—toys designed to mimic products that infer some sort of physical protection to the wearer (for example, protective helmets and visors).

3.1.62 *squeeze toy*—a handheld pliable toy, intended for children under the age of 18 months, usually incorporating a noise-making feature activated by forcing air through an opening when flexed or squeezed, and which recovers to its original shape when released.

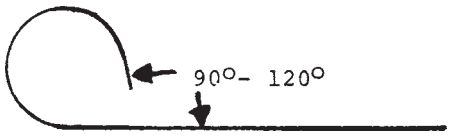

FIG. 7 Rolled Edge

3.1.63 *soft-filled toy/stuffed toy*—toy, clothed or unclothed, with soft body surfaces and filled with soft materials, allowing compression of the torso readily with the hand.

3.1.64 *splinter*—sharp pointed fragment.

3.1.65 *spiral spring*—clockwork-type spring.

3.1.66 *steady-state sound (noise)*—noise in which there are negligibly small fluctuations of sound pressure level within the period of observation.

3.1.67 *strap*—a piece of flexible material in which the width is significantly greater than the thickness.

3.1.68 *tabletop, floor, and crib toy*—toys intended to be played with while attached to or resting on a table top, floor, or crib. Examples of such toys include, but are not limited to, toy vehicles, stacking toys, large and bulky toys, games, and activity toys that attach to crib rails.

3.1.69 *tangle or form a loop*—loops that are formed by reasonably foreseeable manipulation of the cord/strap/elastic. Loops that are formed by excessive or intricate manipulations, or both, of the cord/strap/elastic shall be considered as exempt.

3.1.70 *teether*—toy designed for oral use and intended primarily for symptomatic relief of teething discomfort.

3.1.71 *tool*—screwdriver, coin, or other object which may be used to operate a screw, clip, or similar fixing device.

3.1.72 *toy*—any object designed, manufactured, or marketed as a plaything for children under 14 years of age.

3.1.73 *yo yo elastic tether toy*—a toy consisting of an elastic tether that usually contains a loop on one end to wear around the finger, and a flexible object on the other end intended to be thrown and returned to the hand.

4. Safety Requirements

4.1 *Material Quality*—Toys may be made from new or reprocessed materials and shall be visually clean and free from infestation. The materials shall be assessed visually by the unaided eye rather than under magnification. If reprocessed materials are used, they must be refined so that the level of hazardous substances conforms to the requirements of 4.3.1.

4.2 *Flammability*—Materials other than textiles (excluding paper) used in toys shall not be flammable, as defined under 16 CFR 1500.3 (c) (6) (vi) under the Federal Hazardous Substances Act (FHSA). For testing purposes, any textile fabrics used in toys should comply with 16 CFR 1610. A test procedure for testing flammability of toys, which is an interpretation of 16 CFR 1500.44, is contained in Annex A4.

4.3 *Toxicology*:

4.3.1 *Hazardous Substances*—Toys or materials used in toys shall conform to the FHSA and to the regulations promulgated under that act. Exemptions to this act for certain types of toys are given in 16 CFR 1500.85. The regulations define limits for substances that are toxic, corrosive, an irritant, sensitizer or pressure generating, and radioactive, flammable, and combustible materials. Testing references for hazardous substance content are given in 8.2. It should be noted that specific states may have hazardous substances regulations that are more restrictive than the Federal regulations.

4.3.2 *Manufacturing and Packaging of Food*—All food products supplied with toys shall be manufactured and packaged in compliance with 21 CFR 110, which is concerned with the sanitation practices for the manufacture, processing, packaging, or holding of human food.

4.3.3 *Indirect Food Additives*—Toy components intended to be used in contact with food, such as toy cooking utensils, shall conform to the applicable requirements of the Food, Drug and Cosmetic Act (FDCA), specifically 21 CFR 170 through 189.

4.3.3.1 *Toys in Contact with Food*—Toys comprising components intended to be used in contact with food, such as toy cooking utensils and toy tableware shall meet the requirements of 6.7 for instructional literature.

4.3.3.2 *Ceramicware, Lead, and Cadmium Contamination*—Ceramic toy components intended or likely to hold food, such as a porcelain tea set, shall conform to the applicable requirements of the FDCA, Section 402 (a) (2) (c), and FDA Compliance Policy Guides.

4.3.4 *Cosmetics*—Cosmetics shall conform to the requirements of the Federal FDCA as codified in 21 CFR. The regulations applicable to cosmetics are stated in 21 CFR 700 through 740. The color additive regulations applicable to cosmetics are found in 21 CFR 73, 74, 81, and 82.

4.3.4.1 In addition, cosmetics intended for use by children under 8 years of age shall meet all requirements of this specification and the FHSA regulations, notwithstanding the exclusions of 16 CFR 1500.81 and 1500.3 (b) (4) (ii).

4.3.4.2 The requirements from the Food and Drug Administration (FDA) will therefore be additive to those existing for children's products.

4.3.5 *Paint and Similar Surface-Coating Materials*—Paint and other similar surface-coating materials applied to toys shall comply with the lead content provisions of 16 CFR 1303, issued under the Consumer Product Safety Act (CPSA).

4.3.5.1 The regulation prohibits the use of paints or similar surface-coating materials that contain lead or lead compounds and in which the lead content (calculated as lead metal [Pb]) is in excess of 0.06 % (600 ppm) of the weight of the *total* nonvolatile content of the paint or the weight of the dried paint film.

4.3.5.2 In addition, surface-coating materials shall not contain compounds of antimony, arsenic, barium, cadmium, chromium, lead, mercury, or selenium, of which the metal content of the *soluble* material is in excess of the levels by weight of the contained solids (including pigments, film solids, and driers) given in Table 1. The analytical results obtained should be adjusted in accordance with the test method in 8.3.4.3 prior to comparing them to the values in Table 1 to determine conformance. The soluble level shall be determined by dissolving the contained solids (dried film including pigments, film solids, and driers) as specified in 8.3.

4.3.6 *Cosmetics, Liquids, Pastes, Putties, Gels, and Powders*—The purpose of this requirement is to minimize the risk associated with the lack of cleanliness, shelf life, and contamination of cosmetics, liquids, pastes, putties, gels, and

TABLE 1 Maximum Soluble Migrated Element in ppm (mg/kg) Toy Material

Antimony, (Sb)	Arsenic, (As)	Barium, (Ba)	Cadmium, (Cd)	Chromium, (Cr)	Lead, (Pb)	Mercury, (Hg)	Selenium, (Se)
60	25	1000	75	60	90	60	500

powders used in toys (excluding art materials). It sets standards for cleanliness and the ability to withstand extended shelf life or contamination, or both, during use without microbiological degradation.

4.3.6.1 Water used in the manufacturing and filling of toys shall be prepared according to the bacteriological standards for USP Purified Water. (**Warning—**The various methods for producing purified water each present different potentials for contaminating the final product. Purified water produced by distillation is sterile, provided that the production equipment is suitable and sterile. On the other hand, ion-exchange columns and reverse osmosis units require special attention in that they afford sites for microorganisms to foul the system and contaminate the effluent. Frequent monitoring may thus be called for, particularly with the use of these units following periods of shutdown of more than a few hours.)

4.3.6.2 The formulations of these products used in toys shall be such that they are not subject to microbial degradation during shelf life or reasonably foreseeable use.

4.3.6.3 The cleanliness of these products used in toys and their ingredients shall be determined in accordance with 8.4.1. Formulations used to prevent microbial degradation shall be evaluated in accordance with 8.4.2.

4.3.6.4 Formulations of cosmetics shall be evaluated for potential microbiological degradation in accordance with 8.4.2.

4.3.7 *Stuffing Materials*—Loose fillers for stuffed toys shall be free of objectionable matter originating from insect, bird, rodent, or other animal infestation and of contaminants, such as splinters and metal chips to the extent possible in good manufacturing practice. The test methods that shall be used to determine objectionable material are in Chapter 16 of *Official Methods of Analysis of the Association of Official Analytical Chemists*.[9] In addition, fiber filling, whether natural or synthetic, should meet the requirements of Title 34, Chapter 47, Section 47.317, "Tolerances of the Commonwealth of Pennsylvania Regulation for Stuffed Toys."

4.3.8 *DEHP (DOP)*—Pacifiers, rattles, and teethers shall not intentionally contain DI (2-ethylhexyl) phthalate (also known as dioctyl phthalate). To prevent trace amounts of DEHP (DOP) from affecting analysis, up to 3 % of total solid content will be accepted in the result, when tested in accordance with Practice D 3421.

4.4 *Electrical/Thermal Energy*—Toys operating from nominal 120-V branch circuits shall conform to 16 CFR 1505, issued under the FHSA.

4.5 *Sound-Producing Toys*—These requirements are intended to minimize the possibility of hearing damage that might be caused by toys that are designed to produce sound. These requirements are applicable before and after testing in accordance with 8.5 through 8.10. These requirements do not apply to: (*1*) sounds produced by mouth-actuated toys where the sound pressure level is determined by the blowing action of the child; (*2*) child-actuated sounds such as those produced by xylophones, bells, drums, and squeeze toys where the sound pressure level is determined by the muscular action of the child. The continuous sound pressure requirements do not apply to rattles; however, rattles are covered by impulsive sound pressure requirements; (*3*) radios, tape players, CD players, and other similar electronic toys and toys where the sound output is dependent on the content of removable media (for example, game cartridge, flash cards, and so forth); (*4*) toys that are connected to or interfaced with external devices (for example, televisions, computers) where the sound pressure level is determined by the external device; and (*5*) sound emitted from earphones/headphones.

4.5.1 *Requirements*—When tested in accordance with 8.20, toys that are designed to emit sound shall conform to the following requirements:

4.5.1.1 The A-weighted equivalent sound pressure level, L_{Aeq}, of continuous sounds produced by close to the ear toys shall not exceed 65 dB.

4.5.1.2 The A-weighted equivalent sound pressure level, L_{Aeq} (maximum A-weighted sound pressure level, L_{Amax}, for pass-by tests), of continuous sounds produced by all other toys except close-to-the-ear toys shall not exceed 85 dB.

4.5.1.3 The C-weighted peak sound pressure level, L_{Cpeak}, of impulsive sounds produced by close to the ear toys shall not exceed 95 dB.

4.5.1.4 The C-weighted peak sound pressure level, L_{Cpeak}, of impulsive sounds produced by any type of toy excluding toys using explosive action (for example, percussion caps) shall not exceed 115 dB.

4.5.1.5 The C-weighted peak sound pressure level, L_{Cpeak}, of impulsive sounds produced by a toy using percussion caps or other explosive action shall not exceed 125 dB.

4.6 *Small Objects*—These requirements are intended to minimize the hazards from choking, ingestion, or inhalation to children under 36 months of age created by small objects.

4.6.1 Toys that are intended for children under 36 months of age are subject to the requirements of 16 CFR 1501. Criteria for determining which toys are subject to these requirements are provided, in part, in 16 CFR 1500.50 and 1501 and also in Annex A1 of this specification. The requirements of 16 CFR 1501 state, in part, that no toy (including removable, liberated components, or fragments of toys) shall be small enough without being compressed to fit entirely within a cylinder of the specified dimensions as shown in Fig. 8. For the purposes of this specification, fragments of toys include, but are not limited to, pieces of flash, slivers of plastics, pieces of foam, or fine bits or shavings. Pieces of paper, fabric, yarn, fuzz, elastic, and string are excluded from this requirement.

4.6.1.1 The requirements are applicable before and after use and abuse testing in accordance with Section 8 to determine the accessibility of small objects such as small toys or components of toys including eyes, squeakers, or knobs, or pieces that break off or are removed from toys.

4.6.1.2 The following articles are exempt from the requirements: balloons; books and other paper articles; writing materials (crayons, chalk, pencils, and pens); phonograph records and compact discs (CDs); modeling clay and similar products; and fingerpaints, watercolors, and other paint sets. A listing of exempt articles is provided in 16 CFR 1501.3.

[9] "Extraneous Materials: Isolation," *Official Methods of Analysis of the Association of Official Analytical Chemists*, 15 ed., Chapter 16, 1990.

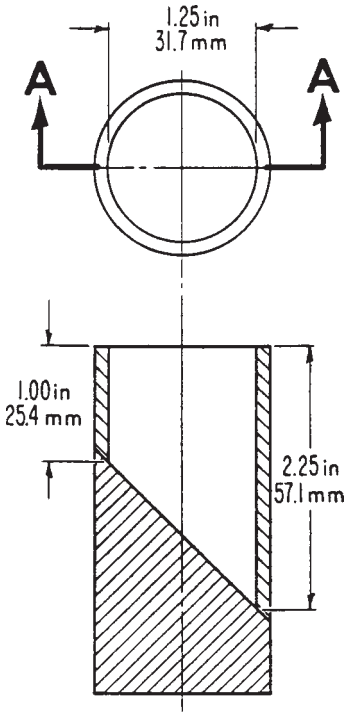

FIG. 8 Small Parts Cylinder

4.6.1.3 Toys that are intended to be assembled by an adult and contain potentially hazardous small objects in the unassembled state shall be labeled in accordance with 5.8.

4.6.2 *Mouth-Actuated Toys*—This requirement relates to toys, such as noisemakers, that are intended to be actuated repeatedly by blowing or sucking. Mouth-actuated toys that contain loose objects, such as spheres in a whistle, or inserts, such as reeds in a noisemaker, shall not release an object that will fit within the small parts test cylinder, as shown in Fig. 8, when air is alternately blown and sucked rapidly through the mouthpiece, according to the procedure described in 8.13. The procedure of 8.13 shall also be applied to the outlet if the air outlet is capable of being inserted into or covered by the mouth.

4.6.2.1 Small objects contained in an inflatable toy shall not be liberated during inflation or deflation.

4.6.3 Toys and games that are intended for use by children who are at least three years old (36 months) but less than six years of age (72 months) are subject to the requirements of 16 CFR 1500.19. With the exception of products such as paper punch-out games and similar items, any toy or game that is intended for use by children who are at least three years old (36 months) but less than six years of age (72 months) and includes a small part is subject to the labeling requirements in accordance with 5.11.2.

4.7 *Accessible Edges*—Toys shall not have accessible, potentially hazardous sharp edges. Toys that are intended to be assembled by an adult, and may contain unprotected potentially hazardous sharp edges in the unassembled state, shall be labeled in accordance with 5.8.

4.7.1 Potentially hazardous sharp metal and glass edges are defined in 16 CFR 1500.49. Toys intended for use by children under 8 years of age are subject to this requirement before or after use and abuse testing, or both, as specified in 8.5-8.10. An illustration of a sharp edge tester is shown in Fig. 9.

4.7.2 Toys containing potentially hazardous edges that are a necessary part of the function of a toy shall carry cautionary labeling as specified in 5.10 if the toy is intended for use by children from 48 to 96 months. Toys intended for children aged less than 48 months shall not have accessible hazardous functional sharp edges.

4.7.3 *Metal Toys*—Accessible metal edges, including holes and slots, shall be free of hazardous burrs and feathering, or shall be hemmed, rolled, or curled, or shall be covered with a permanently affixed device or finish.

NOTE 3—Regardless of the manner in which edges are finished, they are subject to the sharp edge technical requirements as described in 4.7.1. If a device is used to protect an edge, it shall not become detached after being tested in accordance with the appropriate procedures described in 8.5-8.10.

4.7.4 *Molded Toys*—Accessible edges, corners, or mold parting areas of molded toys should be free of hazardous edges produced by burrs and flash or so protected that hazardous edges are not exposed.

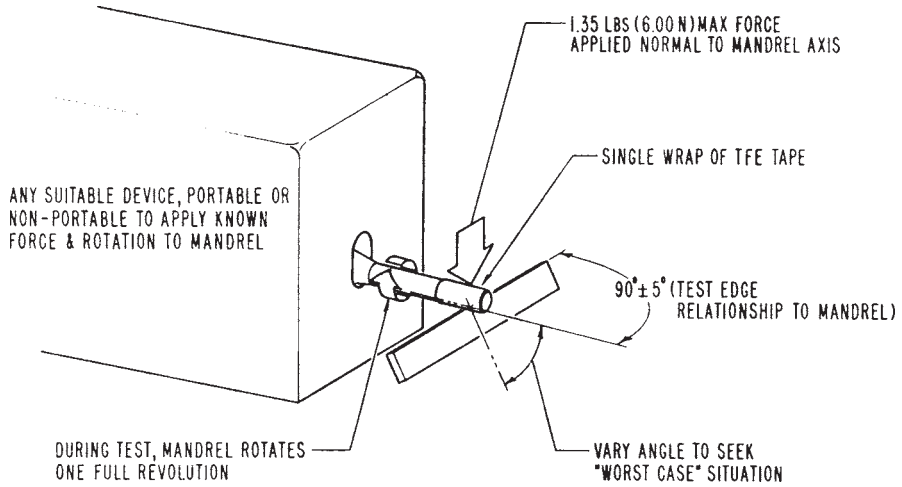

FIG. 9 Principle of Sharp Edge Test

4.7.5 *Exposed Bolts or Threaded Rods*—If the ends of bolts or threaded rods are accessible, the thread shall be free of exposed, hazardous sharp edges and burrs, or the ends shall be covered by smooth finish caps so that hazardous sharp edges and burrs will not be exposed. Any caps that are used shall be subjected to the compression test noted in 8.10, regardless of whether the cap is accessible to flat-surface contact during the appropriate impact test(s) described in 8.7. Protective caps shall also be subjected to the tension test in 8.9 and the torque test in 8.8.

4.8 *Projections*—This requirement relates to potentially hazardous projections in toys intended for use by children under 8 years of age. This requirement is intended to minimize possible puncture hazards to the skin that might be caused should a child fall on a rigid projection, such as unprotected ends of axles, actuating levers, and decorative features. Due to the extremely sensitive nature of the eyes and interior of the mouth, this requirement will not, nor is it intended to, provide protection to those areas of the body. If a projection appears to present a potential skin puncture hazard, the projection shall be protected by suitable means, such as by turning back the end of a wire or by affixing a smoothly finished protective cap or cover, which effectively increases the surface area for potential contact with the skin. The toy shall meet this requirement both before and after testing in accordance with 8.5-8.10. Toys intended to be repeatedly assembled and taken apart shall have the individual pieces and fully assembled articles, as shown on packaging graphics, instructions or other advertising, evaluated separately. The requirements for the assembled toy do not apply to toys where the assembling makes up a significant part of the play value of the toy. Since this requirement relates to hazards arising from a child falling onto a toy, only vertical or nearly vertical projections are required to be evaluated. The toy shall be tested in its most onerous position. Corners of structures do not fall under this category.

4.9 *Accessible Points*—Toys shall not have accessible, potentially hazardous sharp points that may occur because of the following: configuration of the toy; assembly devices such as wires, pins, nails, and staples that are fastened poorly; poorly sheared sheet metal; burrs on screws; and splintered wood. Toys that are intended to be assembled by an adult and may contain potentially hazardous sharp points in the unassembled state shall be labeled in accordance with 5.8.

4.9.1 Potentially hazardous sharp points are defined by 16 CFR 1500.48. Toys intended for use by children under 8 years of age are subject to this requirement before or after use and abuse testing, or both, as specified in 8.5-8.10. An illustration of a sharp-point tester is shown in Fig. 10.

4.9.2 Toys in which an accessible, potentially hazardous sharp point is a necessary function of the toy, such as a needle in a sewing kit, shall carry cautionary labeling as specified in 5.10, if the toy is intended for children from 48 to 96 months old. Toys intended for children less than 48 months old shall not have accessible hazardous functional points.

4.9.3 *Wood*—The accessible surfaces and edges of wood used in toys shall be free of splinters, both before and after being tested in accordance with the appropriate procedures described in 8.5-8.10.

4.10 *Wires or Rods*—Wires or rods used in the interior of toys shall have their ends finished to avoid potentially hazardous points and burrs, shall be turned back, or shall be covered with smoothly finished protective caps or covers, if they can become accessible after use or reasonably foreseeable abuse. Metal wires or other metal materials used for stiffening or for retention of form in toys shall not fracture to produce a hazardous point, edge, or projection hazard when tested in

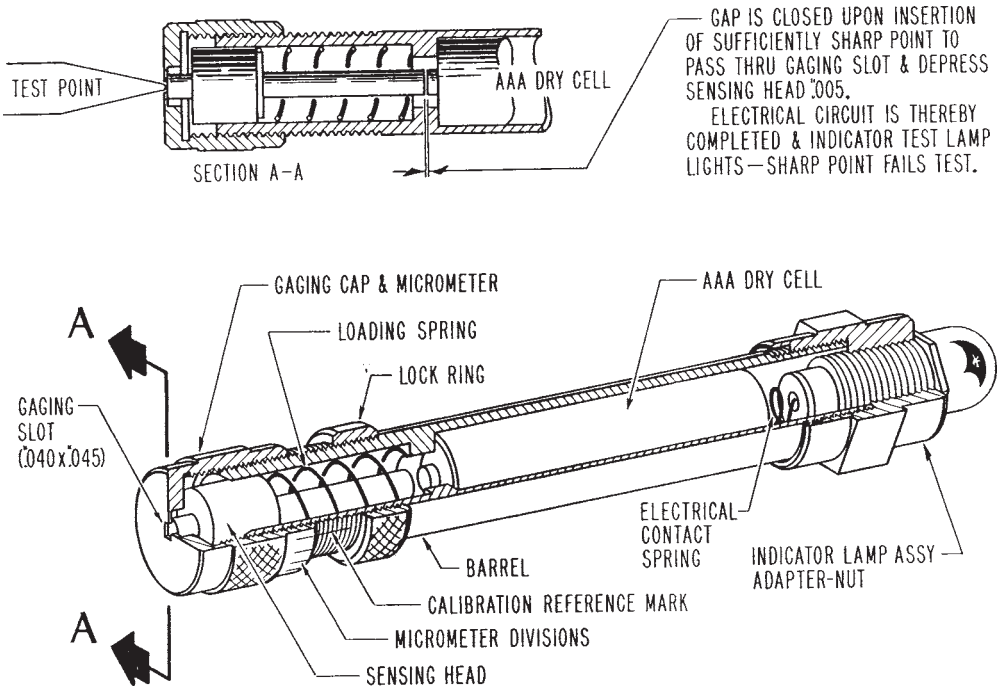

FIG. 10 Sharp Point Tester

accordance with 8.12, if the component can be bent through a 60° arc by the applicable maximum force. When applied perpendicularly to the major axis of the component at a point 2 ± 0.05 in. (50 ± 1.3 mm) from the intersection of the component with the main body of the toy or at the end of the component if the component is less than 2 in. (50 mm) long, the maximum force shall be as follows (within a tolerance of ±0.5 lb (±0.02 kg)):

10 lbf (45 N)	toys intended for use by children 18 months of age or less
15 lbf (67 N)	toys intended for use by children over 18 but not over 96 months of age

The ends of spokes on toy umbrellas shall be protected. If the protection is removed when tested according to 8.9 (tension test) the ends of the spokes shall be free from sharp edges and sharp points when tested in accordance with 4.7.1 (sharp edge test) and 4.9.1 (sharp point test). Furthermore, if the protective components are removed by the tension test, the spokes shall have a minimum diameter of 0.08 in. (2 mm) and the ends shall be smooth, rounded, and approximately spherical with no burrs.

4.11 *Nails and Fasteners*—Nails and fasteners shall not present a point, edge, ingestion, or projection hazard. Points of nails or fasteners shall not protrude so as to be accessible. Additional requirements for nails and fasteners used as axles are given in 4.17.

4.12 *Packaging Film*—This requirement is intended to minimize the possibility of asphyxiation hazards that might be caused by thin packaging films. Flexible plastic film bags and flexible plastic sheets used as packaging materials for shelf packages or used with toys shall be at least 0.00150 in. (0.03810 mm) in nominal thickness, but the actual thickness shall never be less than 0.00125 in. (0.03175 mm). Alternatively, sheeting with an average thickness of less than 0.00150 in. (0.03810 mm) shall be perforated with defined holes so that a minimum of 1 % of the area has been removed over any area of 1.18 × 1.18 in. (30 × 30 mm). The thickness shall be determined using the test method in 8.22. This requirement does not apply to the following:

4.12.1 Shrink film in the form of an over wrap that would normally be destroyed when the package is opened by a consumer.

4.12.2 Bags or plastic film with a minor dimension of 3.94 in. (100 mm) or less. Bag dimensions shall be measured while in the form of a bag, not cut open into a single thickness sheet.

4.13 *Folding Mechanisms and Hinges*—These requirements are intended to eliminate possible crushing, laceration, or pinching hazards that might occur in folding mechanisms and hinges of toys intended to support the weight of a child. Toys shall meet the requirements specified in 4.13.1 and 4.13.2 after they are tested in accordance with 8.5-8.10. Requirements for toy chests are contained in 4.27.

4.13.1 *Folding Mechanisms*—Toy furniture and other toys in which a folding mechanism, arm, or bracing is intended to support a child shall have a safety stop or locking device to prevent unexpected or sudden movement or collapse of the article, or have adequate clearance to provide protection for the fingers, hands, and toes from crushing, laceration or pinching hazards in the event of sudden movement or collapse of the article.

4.13.2 *Hinge-Line Clearance*—Toys having a gap or clearance along the hinge line between a stationary portion and a moveable portion that weighs more than ½ lb (0.2 kg) shall be so constructed that, if the accessible gap at the hinge line will admit a 3⁄16-in. (5-mm) diameter rod, it will also admit a ½-in. (13-mm) diameter rod at all positions of the hinge.

4.14 *Cords, Straps, and Elastics*—These requirements are intended to minimize the potential entanglement and strangulation hazards that might be caused by accessible cords, straps, and elastics. These requirements are applicable before and after use and abuse testing in accordance with 8.5-8.10.

4.14.1 *Cords, Straps, and Elastics in Toys*—Cords or elastics included with or attached to toys intended for children less than 18 months of age (excluding pull toys, see 4.14.3) shall be less than 12 in. (300 mm) long when measured to the maximum length in a free state and under a load of 5 lb (2.25 kg). If cords/straps/elastics or multiple cords/straps/elastics can tangle or form a loop in connection with any part of the toy, including beads or other attachments on the ends of cords/straps/elastics, the loop shall not permit the passage of the head probe (Fig. 11) when tested in accordance with 8.23. Specifically, the loop shall not allow the head probe to be inserted so deep that it admits the base of the probe. The configuration of the loop shall be determined by using all components that make up the loop. For example, the configuration of the loop for the product illustrated in Fig. 12 is comprised of Cord 1, Cord 2, and the toy part.

4.14.1.1 *Cords, Straps, and Elastics Containing a Breakaway Feature*—Cords, straps, and elastics on toys that have loops that admit the base of the head probe shall contain a functional breakaway feature that prevents entanglement by releasing at a force less than 5.0 lbf (22.2 N) when tested in accordance with 8.23.3. The free length of the individual released cord, strap, or elastic should not exceed a maximum length of 12 in. (300 mm). The breakaway feature shall be capable of being reattached without altering the characteristics of the attachment.

4.14.2 *Self Retracting Pull Cords*—Accessible cords used in cord-activated mechanisms in toys intended for use by children under 18 months of age, except monofilament-type cords 1⁄16 in. (2 mm) or less in diameter, shall not retract more than ¼ in. (6 mm) when a weight of 2 lb (0.9 kg) is attached to the fully extended cord with the cord held vertical and the toy held firmly in the most favorable position for retraction. Monofilament cords, 1⁄16 in. (2 mm) or less in diameter, shall not retract under a load of 1 lb (0.45 kg) when tested in the manner described above.

4.14.3 *Pull Toys*—Cords, straps, and elastics greater than 12 in. (300 mm) long for pull toys intended for children under 36 months of age shall not be provided with beads or other attachments that could tangle to form a loop.

4.14.4 *Strings and Lines for Flying Devices*—Kite strings and handheld lines over 6 ft (1.8 m) long, attached to flying devices intended for use as playthings, shall have an electric resistivity of more than $10^8\ \Omega \cdot \text{cm}$ when tested at a relative humidity of not less than 45 % and a temperature of not greater than 75°F (24°C), when measured by a high-voltage, resistance breakdown meter.

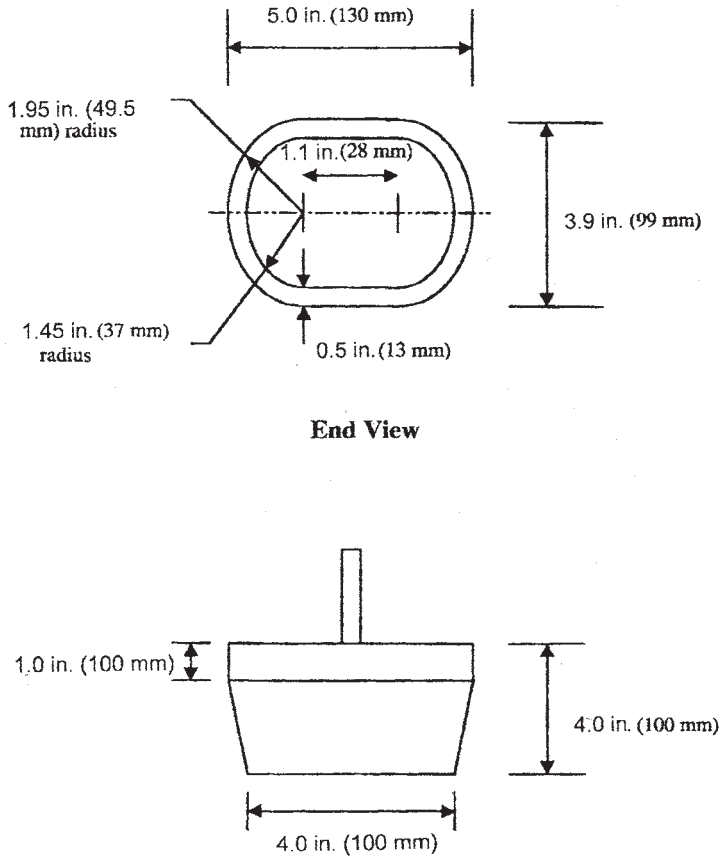

FIG. 11 Head Probe for Cords and Elastics

4.14.5 *Cords on Toy Bags Intended for Children Up to 18 Months*—Toy bags made of impermeable material with an opening perimeter greater than 14 in. (360 mm) shall not have a drawstring or cord as a means of closing.

4.15 *Stability and Over-Load Requirements*:

4.15.1 *Stability of Ride-On Toys and Seats*—These requirements are intended to minimize unexpected hazards that could be caused by a toy that can tip easily. They take into account the use of the child's legs as stabilizing means and recognize that a child learns instinctively to compensate for inclined positions. The requirements listed in 4.15.2 and 4.15.3 shall apply to the following classes of toys intended for use by children aged 60 months or less: ride-on toys, with three or more load bearing wheels, such as wagons; ride-on, action-type toys such as hobby horses; and stationary toys with seats, such as play furniture. Ride-on toys of spherical, cylindrical, or other shape that do not normally have a stable base are not covered by these requirements. The toy shall conform to these requirements after it is tested in accordance with 8.5-8.10.

4.15.2 *Sideways Stability Requirements*—These requirements recognize two types of possible stability hazards: those associated with ride-on toys or seats in which the feet can provide stabilization, and those situations in which the feet are restricted by an enclosing structure.

4.15.2.1 *Sideways Stability, Feet Available for Stabilization*—There shall be no sideways stability test for those ride-on toys or seats in which the height of the seat from the ground is one third, or less than one third, of the height indicated in Table 2 at the lowest age of the age range for which the ride-on toy or seat is intended, and in which the legs of the child are unrestricted in their sideways motion and thus are available for stabilization. (The values given in Table 2 represent the lower of the following two numbers: (*1*) the fifth percentile group of boys at each age from 1 up to and including 5 years; and (*2*) the fifth percentile group of girls at each age from 1 up to and including 5 years.) For those ride-on toys, or seats in which the height of the seat from the ground is greater than one third of the height indicated in Table 2 at the lowest age of the age range for which the ride-on toy or seat is intended, and in which the legs of the child are unrestricted in their sideways motion and thus are available for stabilization, the toy shall not tip when tested in accordance with 8.16. When the lowest age of the intended age range falls between two ages listed in Table 2, the lower of the two shall be chosen.

4.15.2.2 *Sideways Stability, Feet Unavailable for Stabilization*—If the sideways motion of the feet or legs, or both, is restricted, such as by the enclosed sides of a toy

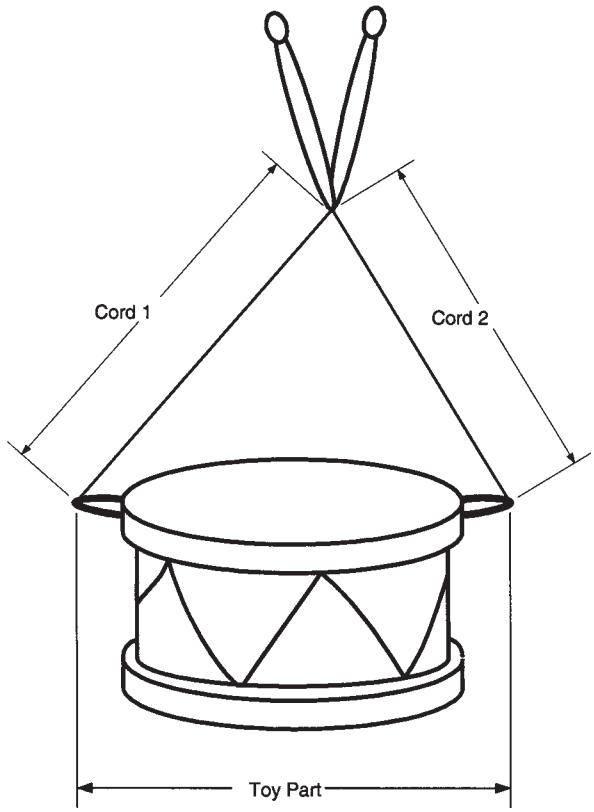

FIG. 12 Loop Example

TABLE 2 Height of Fifth Percentile Children (Values Given for Boys or Girls, Whichever is Lower)

Age, years	Height, in. (cm)
1	27 (69.8)
2	29 (74.4)
3	33 (85.1)
4	37 (93.8)
5	40 (100.5)

automobile, the ride-on toy or seat shall not tip when tested as specified in 8.16, except that the surface shall be inclined 15° to the horizontal.

4.15.3 *Fore and Aft Stability*—This requirement relates to the stability of ride-on toys or seats in the forward direction with respect to the rider, where the rider cannot easily use the legs for stabilization, and in the backward direction with respect to the rider regardless of whether legs are available for stabilization. All ride-on toys or seats falling within the scope of 4.15 shall not tip forward or backward when the toy, which shall be loaded with a simulated child's weight, is tested both facing down and up the slope using the test method of 8.16, except that the surface shall be inclined 15° to the horizontal. The stability of ride-on toys is to be tested not only with the steering wheels in a forward position, but also at an angle of 45° to the left and to the right of the forward position.

4.15.4 *Stability of Stationary Floor Toys*—This requirement is intended to minimize hazards that might be caused by a toy that tips when a door, drawer, or other movable portion is extended to its fullest travel. Stationary floor toys of greater than 30 in. (760 mm) in height and weighing more than 10 lb (4.5 kg) shall not tip when placed on a 10° incline with all movable portions extended to their fullest travel and facing in the direction of the downslope side. The toy shall conform to this requirement after it is tested in accordance with 8.5-8.10.

4.15.5 *Overload Requirements for Ride-On Toys and Seats*—This requirement is intended to minimize unexpected hazards that could be caused by a toy that is not capable of withstanding an overload. All ride-on toys, toys intended for use as seats, or toys designed to support all or part of the weight of the child shall support a load applied to the seat, or to other such intended load-bearing components, without collapsing to produce a hazardous condition. (Examples of hazardous conditions if collapse occurs would include the following: exposure of hazardous edges, or points, projections, crushing or pinching hazards, and power-driven mechanisms.) This load shall be three times the weight indicated in Table 3 at the highest age of the age range for which the toy is intended. The toy shall conform to this requirement after being tested in accordance with 8.5 through 8.10. The test for overload requirements shall be conducted so that it will be consistent with the advertised weight capacity if that figure is higher than the minimum weight capacity in accordance with Table 3. When the highest age of the intended age range falls between two ages listed in Table 3, the higher of the two shall be chosen.

4.15.6 *Wheeled Ride-on Toys*—Ride-on toys incorporating wheels intended for movement along the ground shall be tested in accordance with the Dynamic Strength Test for Wheeled

TABLE 3 Weight of 95th Percentile Children (Values Given for Boys or Girls, Whichever is Higher)

Age, years	Weight, lb (kg)
1	28 (12.6)
2	29 (13.2)
3	42 (18.9)
4	43 (19.7)
5	50 (22.6)
6	59 (26.6)
7	69 (31.2)
8	81 (37.0)
9	89 (40.4)
10	105 (47.9)
11	121 (55.0)
12	120 (54.7)
13	140 (63.6)
14	153 (69.6)

Ride-ons in 8.21. Wheeled ride-on toys shall be tested after being tested in accordance with 8.5-8.10.

4.16 *Confined Spaces*—The purpose of these requirements is to minimize the possible entrapment of children in toys that form enclosures, such as toy refrigerators, and to prevent possible suffocation in head-enclosing toys such as space helmets. Toys shall meet the requirements listed in 4.16.1-4.16.3 after the toys are tested in accordance with 8.5-8.10. See 4.27 for requirements for toy chests.

4.16.1 *Ventilation*—The purpose of these requirements is to minimize the possible entrapment of children in toys that form enclosures, such as toy refrigerators, and to prevent possible suffocation in head-enclosing toys such as space helmets. Any toy made of impermeable material and having a door or lid, which encloses a continuous volume greater than 1.1 ft^3 (0.03 m^3) and in which all integral dimensions are 6 in. (150 mm) or more, shall provide one of the following unobstructed ventilation areas:

4.16.1.1 A minimum of two openings each having a total area of at least 1 $in.^2$ (650 mm^2) placed at least 6 in. (150 mm) apart (see Fig. 13(a)).

4.16.1.2 One opening that is the equivalent of the two 1.0-$in.^2$ (650-mm^2) openings expanded to include the separation area provided this leaves opening areas of 1.0 $in.^2$ (650 mm) on either side of a 6-in. (150-mm) spacing (see Fig. 13(b)). The ventilation openings shall be unobstructed when the toy is placed on the floor in any position and adjacent to two vertical plane surfaces meeting at a 90° angle, so as to

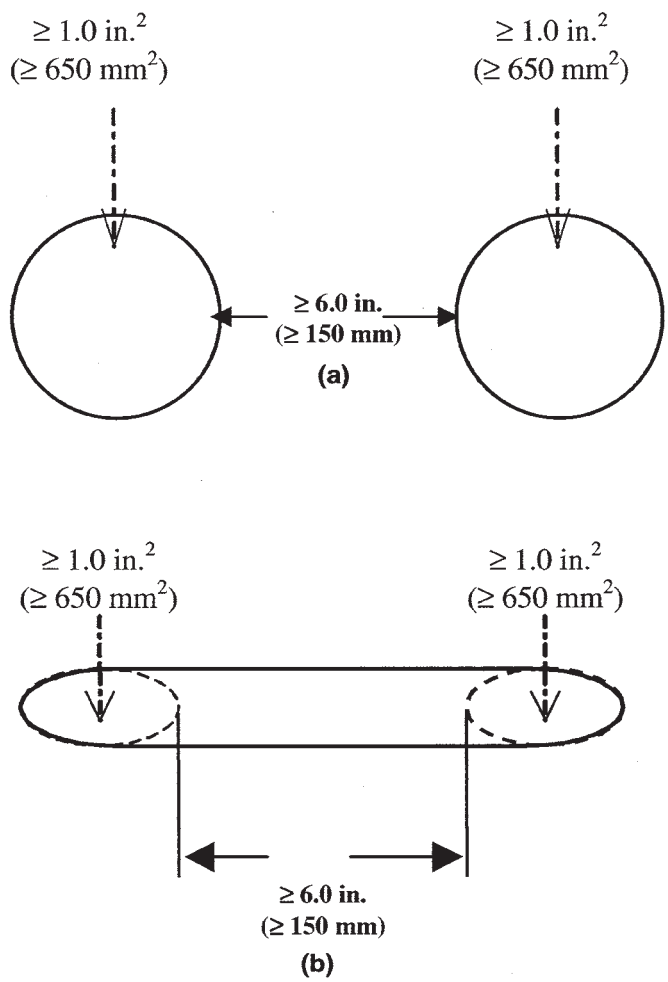

FIG. 13

simulate the corner of a room. If a permanent partition or bars (two or more), which effectively limit the continuous space by making the largest internal dimension less than 6 in. are used to subdivide a continuous space, the ventilation area shall not be required.

4.16.2 *Closures*—Closures (such as lids, covers, and doors) to enclosures falling within the scope of 4.16.1 shall not be fitted with automatic locking devices. Closures shall be of a type that can be opened with a force of 10 lbf (45 N) or less when treated as follows:

4.16.2.1 With the closure in a closed position, apply the force in an outward direction to the inside of the closure perpendicular to the plane of the closure and anywhere within 1 in. (25 mm) from the geometric center of the closure. The force measurement shall be made by means of a force gage with a calibrated accuracy within ±0.3 lb (0.1 kg) when measuring a force of 10 lb (45 N). The dial of the gage shall be graduated with its finest division not exceeding 0.2 lb (0.9 N), and the full-scale range shall not exceed 30 lb (130 N).

4.16.3 *Toys that Enclose the Head*—Toys that enclose the head, such as space helmets, which are made of impermeable material, shall provide means for breathing by the incorporation of unobstructed ventilation areas. The ventilation areas shall consist of a minimum of two holes, with a total of at least 2 in.^{2} (1300 mm^2) of ventilation and at least 6 in. (150 mm) between holes.

4.17 *Wheels, Tires, and Axles*—These requirements are intended to eliminate the possibility of ingestion hazards (as described in 4.6) that might be caused by small wheels or tires that separate during normal use or reasonably foreseeable abuse, as well as laceration or puncture hazards from projecting axles, either on the toy or on wheel assemblies that may be removed from the toy during abuse. The requirements shall apply to transportation wheels on both preassembled and knocked-down toys intended for children aged 96 months or less, except for ingestion hazards from small wheels and axles, which apply to toys intended for children under 36 months of age, as covered in 4.6. In the case of knocked-down toys, the toy shall be tested in the form that it would be assembled by the purchaser, using simple household tools or special tools provided by the manufacturer, if any, or both. After being subjected to the use and abuse tests of 8.5-8.11, wheels, tires, or axles shall not present a laceration, puncture, or ingestion hazard as defined in 3.1.53 and 4.6.1, respectively.

4.18 *Holes, Clearance, and Accessibility of Mechanisms*—These requirements are intended to eliminate possible hazards that may be caused by changing clearances. Toys shall meet these requirements after they are tested in accordance with 8.5-8.10. The different pinch clearance requirements listed in 4.18.1-4.18.6 reflect the different modes of entrapment or pinching that may be encountered.

4.18.1 *Accessible Clearances for Moveable Segments*—This requirement concerns clearances between movable segments on toys intended for children under 96 months only, where the potential for pinching or crushing fingers or other appendages exists. It includes, but is not limited to, wheels and rigid-wheel wells, fenders, or the radial clearance between the wheels and chassis of ride-on toys, or the driven wheels and other parts of toys powered by electrical, spring, or inertial energy. If such accessible clearances admit a 3/16-in. (5-mm) diameter rod, they shall also admit a ½-in. (13-mm) diameter rod in order to prevent the trapping of fingers.

4.18.2 *Circular Holes in Rigid Materials*—This requirement is intended to prevent finger entrapment (which may cut off blood circulation) in accessible holes in sheet metal and other rigid material in toys intended for children aged 60 months or less. (Noncircular holes are believed to present no significant hazard of cutting off blood circulation in entrapped fingers.) If an accessible, circular hole in any rigid material less than 0.062 in. (1.58 mm) in thickness can admit a ¼-in. (6-mm) diameter rod to a depth of ⅜ in. (10 mm) or greater, it shall also admit a ½-in. (13-mm) diameter rod.

4.18.3 *Chains and Belts*—These requirements are to prevent finger crushing through entrapment between links of supporting chains or between chains and sprockets or pulleys and belts.

4.18.3.1 *Supporting Chains*—Chains in toys that support the weight of a child, such as hanging seats or similar indoor devices, intended for children 36 months or less in age, shall be shielded if the chain is accessible and if a 0.19-in. (5-mm) diameter rod can be inserted between two links, as in Fig. 14, with the chain in slack configuration.

4.18.3.2 *Chains or Belts for Ride-On Toys*—Power transmission chains and belts in ride-on toys shall be shielded.

4.18.4 *Inaccessibility of Mechanisms*—Clockwork, battery-operated, inertial, or other power-driven mechanisms in toys intended for children aged 60 months or less shall not have any accessible part of the mechanism present a pinch or laceration hazard. (For circular holes, also see the requirement under 4.18.2.)

4.18.5 *Winding Keys*—This requirement is to prevent the pinching or laceration of fingers by entrapment between the key and body of the toy. It applies to toys intended for children under 36 months of age that use winding keys that rotate as the mechanism unwinds. This requirement applies to keys with flat plates attached to the stem and that protrude from a rigid surface; the requirement does not apply to those circular knobs to which the torque is applied. If the clearance between the flukes of the key and body of the toy will admit a 0.25-in. (6-mm) diameter rod, it shall also admit a 0.5-in. (13-mm) diameter rod at all positions of the key. For keys covered by this requirement, there shall be no opening in the flukes of the key that can admit a 0.19-in. (5-mm) diameter rod.

4.18.6 *Coil Springs*—These requirements are intended to prevent the pinching or crushing of fingers or toes by toys

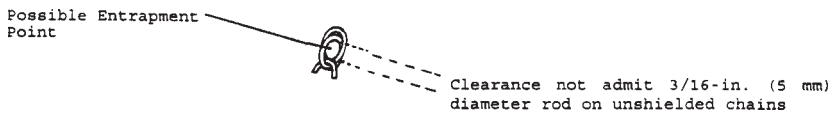

FIG. 14 Clearance for Chain Links

containing springs. Coil springs (either compression or extension) that form part of a component that carries the weight of a child shall be shielded so as to prevent access during use or reasonably foreseeable abuse unless either of the following occurs:

4.18.6.1 A 0.12-in. (3-mm) diameter rod cannot be inserted freely; or

4.18.6.2 A 0.25-in. (6-mm) diameter rod can be inserted freely between the adjacent coils at all points in the action cycle when the spring is subjected first to a weight of 3 lb (1.4 kg) and then to a weight of 70 lb (32 kg).

4.19 *Simulated Protective Devices (such as helmets, hats, and goggles)*—These requirements are intended to minimize hazards that might be caused, for example, by goggles or space helmets if the material from which they are constructed fails; or by toys that simulate protective devices such as football helmets and pads, if the wearer uses the article as a real protective device rather than as a toy. The toy shall conform to the requirements listed in 4.19.1 and 4.19.2 after testing in accordance with 8.7.4 and 8.8 through 8.10.

4.19.1 *Eye Protection*—All rigid toys that cover the face, such as goggles, space helmets, or face shields, shall be constructed of impact-resistant material that will not have sharp edges, sharp points, or loose parts that could enter the eye before or after being tested in accordance with 8.5-8.10. This applies to items with cutout eye holes as well as items that cover the eyes.

4.19.2 Toys that simulate safety protective devices (examples include, but are not limited to, construction helmets and sports helmets) and their packages shall be labeled clearly in accordance with 5.9 to warn the purchaser that they are not safety protective devices.

4.20 *Pacifiers*—Infant pacifiers shall conform to the safety requirements as specified in 16 CFR 1511. Illustrations of the pacifier test fixture are shown in Fig. 15.

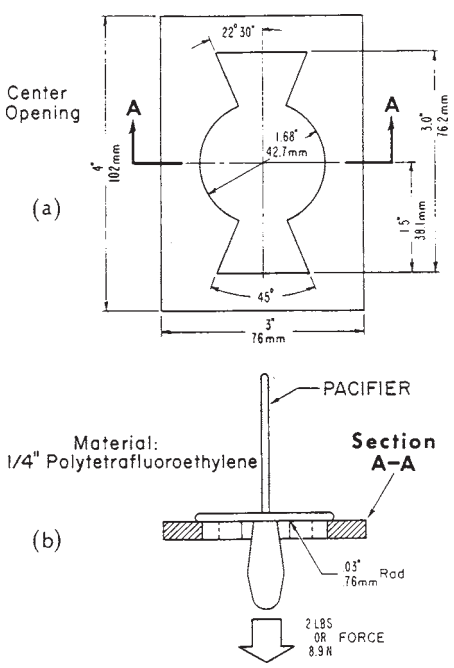

FIG. 15 Pacifier Test Fixture

4.20.1 Pacifiers with rubber nipples shall conform to the nitrosamine levels as specified in Specification F 1313. This specification states that a test sample of nipples, drawn from a standard production lot, shall not contain more than 10 ppb in each of three aliquots of any one nitrosamine. In addition, the total nitrosamines of the sample shall not exceed 20 ppb.

4.20.2 Toy pacifiers attached to, or sold with, toys intended for children under 36 months of age shall comply with the requirements outlined in 4.6.1 of this specification (small objects), and either conform to the requirements of 16 CFR 1511 or have a nipple length no longer than 0.63 in. (16 mm). This measurement shall be taken from the nipple side of the shield to the end of the nipple.

4.21 *Projectile Toys*—These requirements relate to certain, but not all, potential, unexpected hazards that might be caused by projectile firing toys and by the firing of improvised projectiles from such toys. Certain well-recognized hazards that are inherent in traditional toys such as slingshots and darts are not covered by these requirements. The discharge mechanism as well as the projectile shall conform to the requirements specified in this section after testing in accordance with the appropriate test methods described in 8.5-8.10 and 8.15.

4.21.1 These requirements apply to toys that are intended to launch projectiles into free flight by means of a discharge mechanism in which the kinetic energy of the projectile is determined by the toy and not by the user.

4.21.1.1 No projectile intended to be fired from a toy shall have any sharp edges, sharp points, or small parts that would fit within the cylinder shown in Fig. 8.

4.21.1.2 No rigid projectile fired from a toy shall have a tip radius less than 0.08 in. (2 mm).

4.21.1.3 Any rigid projectile fired from a toy that has a kinetic energy that exceeds 0.08 J (as determined by 8.15.1) shall have an impact surface(s) of a resilient material.

4.21.1.4 Any protective tip shall either (*1*) not be detached from the projectile when subjected to the torque and tension tests described in 8.8 and 8.9, or (*2*) if the protective tip does become detached during the test at less than the specified torque or tension, or both, the projectile shall not be able to be launched from the provided launcher. Additionally, the protective tip shall not produce or reveal hazardous points or edges when fired into a solid object, in accordance with the test methods described in 8.15.4.

4.21.1.5 The aforementioned requirements shall not apply to any discharge mechanism incapable of storing energy independent of the user, or intended to propel a ground-based vehicular toy along a track or other surface, or when the projectile is inaccessible to a child when it leaves the discharge mechanism, for example, bagatelle or pinball machines.

4.21.2 *Discharge Mechanisms*—Discharge mechanisms shall be unable to discharge potentially hazardous improvised projectiles such as pencils or pebbles without modification by the user.

4.21.3 Any arrow shall have a protective tip that complies with 4.21.1.4.

4.22 *Teethers and Teething Toys*—These requirements are intended to address a potential impaction hazard associated

with teethers. These requirements are applicable before and after use and abuse testing in accordance with Section 8.

4.22.1 Teethers and teething toys shall conform to the dimensional requirements for infant rattles as specified in 16 CFR 1510. Illustrations of a rattle test fixture are shown in Fig. 16. A teether shall meet this requirement when tested under the force only of its own weight and in a noncompressed state.

4.22.2 In addition, teethers and teething toys incorporating nearly spherical, hemispherical, or circular flared ends shall be designed so that such ends are not capable of entering and penetrating to the full depth of the cavity in the supplemental test fixture shown in Fig. 17. A teether shall meet this requirement when tested under the force only of its own weight and in a noncompressed state.

4.22.3 *Exclusion*—The requirements of 4.22.1 and 4.22.2 shall not apply to teething toys that are composed of liquid-filled beads that are attached to form a ring or beads that are threaded on a flexible cord or string.

4.23 *Rattles*—Infant rattles shall conform to the safety requirements as specified in 16 CFR 1510. Illustrations of a rattle test fixture are shown in Fig. 16.

4.23.1 In addition to meeting the requirements of 16 CFR 1510, rigid rattles incorporating nearly spherical, hemispherical, or circular flared ends shall be designed so that such ends are not capable of entering and penetrating to the full depth of the cavity in the supplemental test fixture illustrated in Fig. 17. A rattle shall meet this requirement when tested under the force only of its own weight and in a noncompressed state. These requirements are applicable before and after use and abuse testing in accordance with Section 8.

4.24 *Squeeze Toys*—These requirements are intended to address a potential impaction hazard associated with squeeze toys intended for children under the age of 18 months. These requirements are applicable before and after use and abuse testing in accordance with Section 8.

4.24.1 Squeeze toys shall conform to the dimensional requirements for rattles as specified in 16 CFR 1510. Illustrations of a rattle test fixture are presented in Fig. 16. A squeeze toy shall meet these requirements when tested under the force only of its own weight and in a noncompressed state.

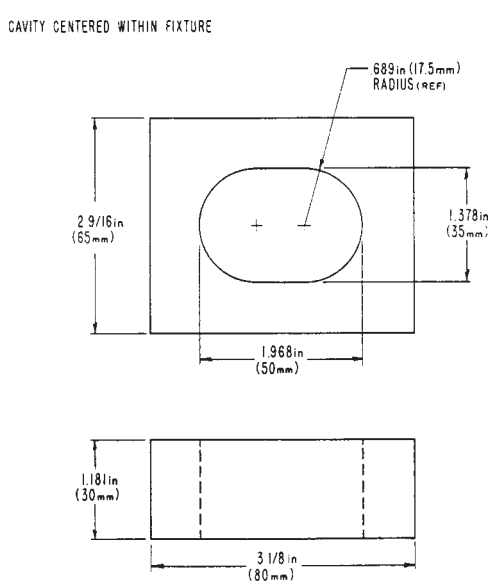

FIG. 16 Rattle Test Fixture

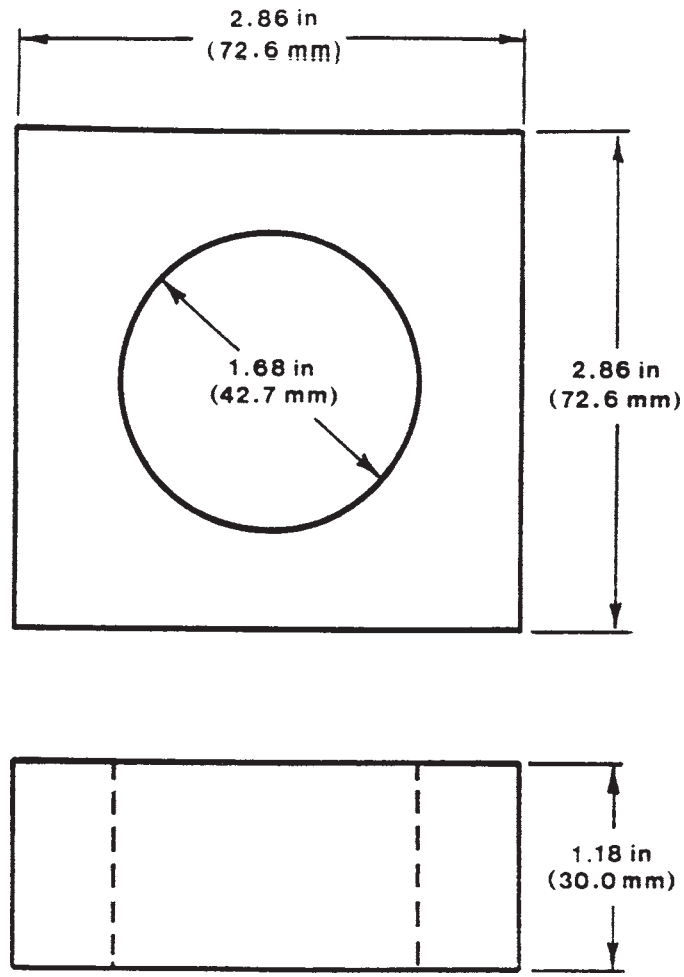

FIG. 17 Supplemental Test Fixture for Rattles, Squeeze Toys, and Teethers

4.24.2 In addition, squeeze toys incorporating nearly spherical, hemispherical, or circular flared ends shall be designed so that such ends are not capable of entering and penetrating to the full depth of the cavity in the supplemental test fixture shown in Fig. 17. A squeeze toy shall meet these requirements when tested under the force only of its own weight and in a noncompressed state.

4.25 *Battery-Operated Toys*—These requirements are intended to address potential risks of injury associated with battery usage in toys intended for use by children (for example, battery overheating, leakage, explosion and fire, and choking on or swallowing batteries). Both non-rechargeable and rechargeable batteries are subject to these requirements. Battery-operated toys shall conform to the requirements specified in this section after testing in accordance with the appropriate test methods described in 8.5-8.12. For purposes of ensuring compliance with these requirements, fresh alkaline batteries that meet the dimensional requirements of the latest revision of ANSI C18.1 or the latest revision of IEC 60086-2 shall be selected for test purposes. If another battery chemistry is specifically required for use in the toy by the manufacturer, testing shall be repeated using that type of battery. When

rechargeable batteries are specified by the manufacturer, fully recharged batteries shall be used for testing purposes.

4.25.1 The toy shall be marked permanently on the battery compartment or on the area immediately adjacent to the battery compartment to show the correct battery polarity using the polarity symbols "+" and "–". Additional markings located on the toy or in the instructions must indicate the correct battery size and voltage. These markings are not required for non-replaceable batteries or for rechargeable battery packs that, by design, can only be inserted in the correct orientation. Battery compartments for button cell batteries are not subject to this requirement.

NOTE 4—The battery compartment door is considered part of the battery compartment.

4.25.1.1 Toys containing non-replaceable batteries shall be labeled in accordance with 5.15.

4.25.2 The maximum allowable direct current potential between any two accessible electrical points is 24 V nominal.

4.25.3 Battery-operated toys shall be designed so that it is not possible to charge any non-rechargeable battery. This can be achieved through physical design of the battery compartment or through the use of an appropriate electrical circuit design. This applies to situations in which a battery may be installed incorrectly (reversed) or in which a battery charger may be applied to a toy containing non-rechargeable batteries, or both. This section does not apply to circuits having one or two non-rechargeable batteries as the only source of power.

4.25.3.1 Toys having a circuit powered only by button cell type batteries are not subject to this requirement.

4.25.4 For toys intended for children less than 3 years old, all batteries shall not be accessible before or after testing in accordance with 8.5-8.10, without the use of a coin, screwdriver, or other common household tool. Testing is performed using the recommended batteries installed.

4.25.5 For all toys, batteries that fit completely within the small parts test cylinder shown in Fig. 8 shall not be accessible, before or after testing in accordance with 8.5-8.10, without the use of a coin, screwdriver, or other common household tool. Testing is performed using the recommended batteries installed.

4.25.6 Batteries of different types or capacities shall not be mixed within any single electrical circuit. In applications requiring more than one type or capacity of battery to provide different functions or in applications requiring the combination of alternating current and non-rechargeable batteries, each circuit shall be isolated electrically to prevent current from flowing between the individual circuits.

4.25.7 The surfaces of the batteries shall not achieve temperatures exceeding 71°C.

4.25.7.1 This requirement is applicable for all battery-operated toys during normal use conditions. In addition, battery-operated toys intended for children 96 months or less shall meet this requirement after reasonably foreseeable abuse.

4.25.7.2 If external moving parts of the toy that are mechanically linked to the motor can be stalled by the user, test for a stalled motor condition according to the procedures of 8.18 to determine conformance with the temperature limits.

4.25.8 No condition shall occur that would cause the toy to fail the temperature requirements of 4.25.7 or present a combustion hazard as described in 4.25.

4.25.9 Battery-operated toys shall meet the requirements of 6.6 for instructions on safe battery usage. Toys which use non-replaceable batteries as the only source of power are not subject to 6.6.

4.25.10 *Battery-Powered Ride-On Toys*—These requirements cover wheeled ride-on toys, not intended for streets or roadways, using a battery power source that is capable of delivering at least 8 amps into any variable resistor load for at least one minute.

4.25.10.1 The maximum temperature measured on the insulation of any conductor shall not exceed the temperature rating of the material (third party test laboratory rating) when tested in accordance with 8.19.2.

4.25.10.2 Battery-powered ride-on toys shall not present a risk of fire when tested in accordance with the stalled motor test of 8.19.3.

4.25.10.3 A battery-powered ride-on toy designed with a wiring system that has a user replaceable device (fuse type) for the primary circuit protection or a wiring system with user resetable primary circuit protection (manual reset fuse) shall not actuate (open or trip) when tested in accordance with the nuisance tripping test of 8.19.4.

4.25.10.4 Switches used in battery-powered ride-on toys.

(1) Polymeric materials in switches used in battery-powered ride-on toys that are used to support current-carrying parts shall carry a minimum flame rating of UL-94 V-0 or have a glow wire ignition rating of 750°C. Note: This requirement does not apply to switches used in low-power circuits. A low-power circuit is defined as one using an effective battery power source that is not capable of delivering at least 8 amps into any variable resistor load for at least one minute.

(2) The switch body shall not result in a short-circuit condition when subjected to the switch endurance test and overload tests of 8.19.5.

(3) The switch shall not fail in a mode that could cause the vehicle to run continuously (switch stuck in the "on" position) when subjected to the endurance test and the overload test in 8.19.5.

4.25.10.5 User replaceable circuit protection devices in battery-powered ride-on toys.

(1) User replaceable circuit protection devices used in battery-powered ride-on toys shall be listed, recognized or certified by an independent laboratory.

(2) All circuit protection devices used in battery-powered ride-on toys intended to be replaced by the user shall be replaceable only with the use of a tool or by a design which does not easily allow tampering such as a design requiring excessive force to open.

4.25.10.6 Batteries, as described in 4.25.10, and battery chargers.

(1) Battery connectors must be constructed of material with a V-0 flame rating or have a glow wire ignition rating of 750°C.

(2) The battery charging system shall not present a risk of fire due to a short-circuit condition applied to any point in the

length of a charger/battery interconnecting cable when tested in accordance with 8.19.7.

(3) During charging, battery-charging voltages shall not exceed the recommended charging voltages when tested in accordance with 8.19.6.

(4) Battery chargers must be certified to the appropriate current national standard, for example UL, CSA, or equivalent standards body.

4.25.10.7 Wiring connected to the main/motor battery shall be short-circuit protected and shall not present the risk of fire when tested in accordance with 8.19.7.

4.25.10.8 Strain relief shall be provided to prevent mechanical stress on wires entering a connector block during routine maintenance such as battery charging, and tested in accordance with 8.19.8.

4.25.10.9 Battery-powered ride-on toys shall comply with the requirements in 5.15.1 for safety labeling, 6.6.3 for additional instructional literature, and 7.3 for required producer's markings.

4.26 *Toys Intended to be Attached to a Crib or Playpen*—These requirements are intended to minimize entanglement or strangulation hazards that might be caused by toys intended to be attached to a crib or playpen (see also 4.14).

4.26.1 *Protrusions*—Toys attached to a crib or playpen in the manner prescribed by the manufacturer's instructions shall not have hazardous protrusions that could contribute to entanglement injury. This requirement is applicable before and after use and abuse testing in accordance with 8.5-8.10. Design guidelines are provided in Annex A3.

4.26.2 *Crib Mobiles*—Crib mobiles shall comply with the requirements listed in 5.6 for safety labeling and 6.4 for instructional literature.

4.26.3 *Crib Gyms*—Crib gyms, including crib exercisers and similar toys intended to be strung across a crib or playpen, shall comply with the requirements listed in 5.5 for safety labeling and 6.3 for instructional literature.

4.27 *Toy Chests*—These requirements are intended to minimize the following:

(1) Possible entrapment and strangulation hazards associated with sudden lid closing or dropping;

(2) Possible crushing, pinching, and laceration hazards associated with folding mechanisms, hinges, and lid supports; and

(3) Possible suffocation hazards due to lack of adequate ventilation.

4.27.1 *Lid Support*:

4.27.1.1 Toy chests with vertically opening, hinged lids shall be provided with lid-support mechanisms to prevent sudden collapse or dropping of the lid. The lid-support mechanism shall support the lid so that at no position in the arc of travel of the lid from within 2 in. (50 mm) of the fully closed position, through an arc not to exceed 60° from the fully closed position, shall it drop more than 0.50 in. (13 mm) under the influence of its own weight, except in the last 2 in. (50 mm) of travel. The test shall be conducted in accordance with 8.14.1.

4.27.1.2 The toy chest lid shall comply with this requirement before and after being subjected to 7000 opening and closing cycles, in accordance with 8.14.1.2.

4.27.1.3 The lid-support mechanism shall not require adjustment by the consumer to insure adequate lid support; nor shall it require adjustment in order to comply with 4.27.1.1 after being cycled in accordance with 8.14.1.2.

4.27.1.4 Lid-support mechanisms shall be designed so as to prevent pinching, crushing, or laceration injuries to fingers. Clearances or gaps produced by the action of such mechanisms (between components of the mechanism or between the mechanism and the toy chest or its lid) shall be constructed so that if the gap admits a 0.19-in. (5-mm) diameter rod, it will also admit a 0.50-in. (13-mm) diameter rod at all positions of the arc of travel of the lid. This requirement does not apply to lid support mechanisms installed on the inside of the toy chest that are at least 12 in. (300 mm) from the front and side edges of the toy chest or its lid.

4.27.2 *Hinge Line Clearance*—Toy chests having a gap or clearance along a hinge line between a stationary portion and a moveable portion shall be constructed so that, if the gap admits a 0.19-in. (5-mm) diameter rod, it will also admit a 0.50-in. (13-mm) diameter rod at all positions of the arc of travel of the moveable portion.

4.27.3 *Closures*—Toy chest closures such as lids, covers, and doors shall not be fitted with automatic locking devices. Closures and lids shall be of a type that can be opened with a force of 10 lbf (45 N) or less when tested in accordance with 8.14.2.

4.27.4 *Ventilation*:

4.27.4.1 Any toy chest having a door or lid that encloses a continuous volume greater than 1.1 ft^3 (0.031 m^3) and in which all of the internal dimensions are 6 in. (150 mm) or more shall provide an unobstructed ventilation area of greater than a total of 2 $in.^2$ (1300 mm^2) over two or more separate openings situated at least 6 in. (150 mm) apart. The ventilation area shall remain unobstructed when the toy chest is placed on the floor in any position and adjacent to two vertical plane surfaces meeting at a 90° angle, so as to simulate the corner of a room.

4.27.4.2 If a permanent partition or bars (two or more) that limit the continuous space by making the largest internal dimension less than 6 in. (150 mm) (excluding diagonal measurements) are used to subdivide a continuous space, the ventilation area shall not be required.

4.27.5 Toy chests shall comply with the requirements listed in 7.2 for safety labeling and 6.2 for accompanying instructional literature.

4.28 *Stuffed and Beanbag-Type Toys*—Stuffed and beanbag-type toys shall meet the applicable requirements of this specification after being tested in accordance with 8.9.1.

4.29 *Stroller and Carriage Toys*—Stroller and carriage toys shall comply with the requirements for safety labeling in 5.7.

4.30 *Art Materials*—The purpose of this requirement is to minimize the potential risks associated with the use of art materials that present chronic health hazards.

4.30.1 Toys and components of toys that fall within the definition of art material as found in 16 CFR 1500.14 (b) (8) shall meet the requirements for toxicological review by a U.S. board-certified toxicologist. The protocol used to evaluate the art materials must be filed with the Consumer Product Safety Commission (CPSC), and the list of ingredients must also be

filed with the commission if the material is or contains a chronically hazardous substance.

4.30.2 Toys and components of toys that are art materials and are determined to contain hazardous materials must have appropriate warnings as defined in the Federal regulations and as noted in 5.13 of this specification. Items that do not contain hazardous materials must also be labeled as to their conformity.

4.30.3 Toys and components of toys that have been determined to pose a chronic health hazard and require warnings are not suitable for use by children who are in pre-kindergarten, or grades one through six.

4.31 *Toy Gun Marking*—This requirement is intended to minimize the potential for a toy gun to be mistaken for a real firearm.

4.31.1 This requirement applies to all toy, look-alike, and imitation firearms which have the general appearance, shape, or configuration, or combination thereof, of a firearm. This includes, but is not limited to, nonfunctional guns, water guns, air soft guns, cap guns, light emitting guns, and guns with an opening to eject any nonmetallic projectile.

4.31.2 This requirement does not apply to the following types of guns:

4.31.2.1 Futuristic toy guns that do not have the general appearance, shape, or configuration, or combination thereof, of any firearm.

4.31.2.2 Nonfiring collector replica antique firearms that look authentic and may be a scale model but are not intended as toys.

4.31.2.3 Traditional B-B guns, paint ball guns, or pellet guns that expel a projectile through the force of compressed air, compressed gas, or mechanical spring action, or combination thereof.

4.31.2.4 Decorative, ornamental, and miniature objects having the appearance, shape, or configuration, or combination thereof, of a firearm provided that the objects measure no more than 1.50 in. (38 mm) in height by 2.75 in. (70 mm) in length, with the length measurement excluding any gun stock length measurement. This includes items intended to be displayed on a desk or worn on bracelets, necklaces, key chains, etc.

4.31.3 Items subject to this requirement must be marked or manufactured, or both, in any one of the following ways. The marking must be permanent and must remain in place after being tested in accordance with 8.5-8.10. The word "permanent" excludes the use of ordinary paint or labels for the purposes of this section. The "blaze orange" color referred to in 4.31.3.1 and 4.31.3.2 is Federal Standard 595a, Color 12199.

4.31.3.1 A blaze orange plug, or brighter orange colored plug, affixed into the muzzle end of the barrel as an integral part of the toy. The plug shall not be recessed more than 0.25 in. (6 mm) from the muzzle end of the barrel.

4.31.3.2 A blaze orange band, or brighter orange colored band, covering the circumference of the muzzle end of the barrel for a distance of at least 0.25 in. (6 mm).

4.31.3.3 Coloration of the entire exterior surface of the toy in white, bright red, bright orange, bright yellow, bright green, bright blue, bright pink, or bright purple, either individually or as the predominant color in combination with any other color in any pattern.

4.32 *Balloons*—Packages containing latex balloons and toys or games containing latex balloons shall comply with the labeling requirements of 16 CFR 1500.19. Labeling statements for balloons are contained in 5.11.5 of this specification.

4.33 *Certain Toys with Spherical Ends*—These requirements are intended to address a potential impaction hazard associated with certain toys incorporating spherical-shaped ends.

4.33.1 Toys intended for children up to the age of 18 months, having a total weight less than 1.1 lb (0.5 kg) incorporating spherical, hemispherical, or circular flared ends and which are attached to a shaft, handle, or support that has a smaller cross section, shall be so designed that such ends are not capable of entering and penetrating past the full depth of the cavity of the supplemental test fixture shown in Fig. 17. A toy shall meet this requirement when tested under the force only of its own weight and in a noncompressed state.

4.33.1.1 *Exclusion*—The requirement of 4.33.1 shall not apply to soft-filled (stuffed) toys or soft-filled parts of toys or parts of fabric.

4.33.2 *Preschool Play Figures*—This requirement is intended to address the potential choking/obstruction hazard associated with certain preschool figures intended for children under three years of age. The characteristics that distinguish toy figures falling within the scope of this requirement include: (*1*) a round, spherical, or hemispherical end with tapered neck attached to a simple cylindrical shape without appendages, and (*2*) an overall length not exceeding 2.5 in. (64 mm) (see examples in Fig. 18). This includes figures with added or molded features such as hats or hair, which retain the rounded shape of the end.

4.33.2.1 Preschool play figures intended for children under three years of age shall be designed so that their rounded ends are not capable of entering and penetrating to the full depth of the cavity in the Supplemental Test Fixture illustrated in Fig. 17. Test the play figure under the force of its own weight.

4.33.2.2 *Exclusion*—The requirement of 4.33.2.1 shall not apply to soft play figures made of textiles.

4.34 *Marbles*—Marbles shall comply with the labeling requirements of 16 CFR 1500.19. Labeling statements for marbles are contained in 5.11.4 of this specification.

4.34.1 Toys and games intended for children at least 3 years of age but less than 8 years of age that contain a marble shall comply with the labeling requirements 16 CFR 1500.19. Applicable labeling statements are contained in 5.11.4.1 of this specification.

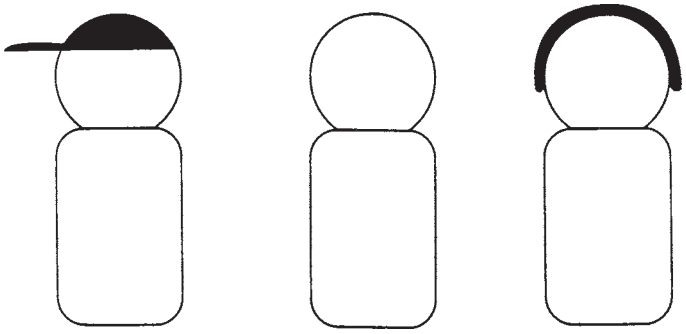

FIG. 18 Examples of Preschool Play Figures

4.35 *Balls*:

4.35.1 Balls intended for children under 36 months of age are subject to the requirements of 16 CFR 1500.18 (a)(17). A loose ball in toys intended for children under 36 months of age shall not, under the influence of its own weight and without compression, pass entirely through the template shown in Fig. 19. A ball which does pass through the template is determined to be a "small ball."

4.35.2 Toys intended for children at least 3 years old but less than 8 years of age that contain a loose small ball are subject to the requirements of 16 CFR 1500.19. Applicable labeling statements are contained in 5.11.3 of this specification.

4.36 *Pompoms*—These requirements are intended to address choking hazards associated with pompoms on toys intended for children under three years of age that detach during 8.17. Pompoms detached during 8.17 must not pass entirely through the 1.75-in. (44.5-mm) test fixture (see Fig. 19) under their own weight. Any components, pieces, or individual strands of the pompom that are liberated during the torque and tension tests should not be subject to this test. Test the pompoms by putting the free ends of fiber into the gage.

4.37 *Hemispheric-Shaped Objects*—These requirements apply to toy cup-, bowl-, or one-half egg-shaped objects having a nearly round, oval, or elliptical opening with the minor and major inner dimensions between 2.5 in. (64 mm) and 4.0 in. (102 mm), a volume of less than 6.0 oz (177 mL), a depth greater than 0.5 in. (13 mm), and intended for children under 3 years of age. The following are exempt from this requirement:

4.37.1 Objects intended for drinking (for example, tea cups).

4.37.2 Objects intended to hold liquids in products appropriate for children at least 2 years old (for example, pots and pans).

4.37.3 Containers that must be airtight so the contents can maintain their functional integrity (for example, modeling clay containers.)

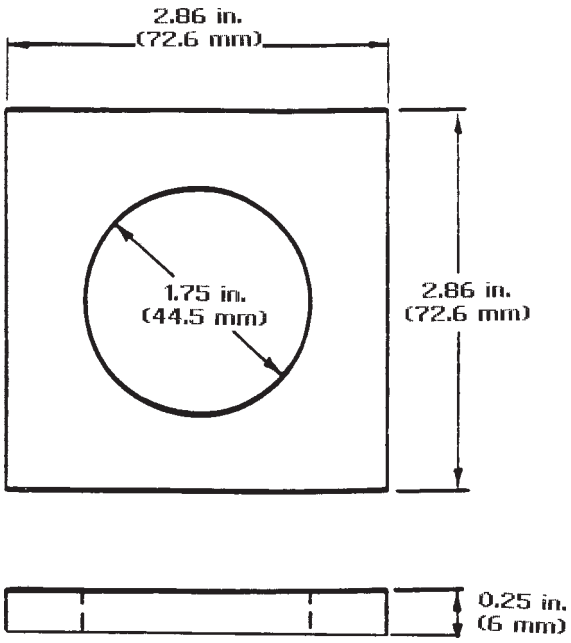

FIG. 19 Test Fixture for Small Balls

4.37.4 Non-detachable (as determined by testing in accordance with 8.6-8.10 of this specification) components of larger products (for example, bowl-shaped smoke stack that is permanently attached to a toy train or a swimming pool that is molded into a larger toy playscape).

4.37.5 Containers that are part of the retail package intended to be discarded once the toy is removed from the package.

4.37.6 *Performance Requirements*—Cup/bowl/one-half egg-shaped objects must have, as a minimum, one of the following characteristics (*a*, *b*, *c*, *d*, or *e*). For purposes of these requirements, unless otherwise specified, an opening is defined as a hole of any shape with a minor dimension of 0.080 in. (2 mm). These requirements apply before and after testing in accordance with 8.6-8.10 of this specification.

(a) Have at least two openings that are a minimum of 0.5 in. (13 mm) from the rim as measured along the outside contour.

(1) If the openings are placed in the base of the object, at least two of the openings must be a minimum of 0.5 in. (13 mm) apart. (See Fig. 20.)

(2) If the openings are not placed in the base of the object, at least two of the openings must be placed at least 30° but not more than 150° apart. (See Fig. 21.)

(b) The plane of the open end of the cup shape shall be interrupted at the center by some type of divider that extends to 0.25 in. (6 mm) or less from the plane of the open end of the cup. (See Fig. 22 for an example.)

(c) Have three openings that are at least 100° apart, located between 0.25 in. (6 mm) and 0.5 in. (13 mm) from the rim as measured along the outside contour.

(d) Have a repeating scalloped edge pattern around the entire rim. The maximum distance between center lines of adjacent peaks shall be 1 in. (25 mm) and the minimum depth shall be 0.25 in. (6 mm). (See Fig. 23 for examples of scalloped edge patterns.)

(e) Have an opening with a minor dimension of at least 0.66 in. (17 mm) located anywhere in the base or in the side wall of the object. If the opening is located in the sidewall of the object, the edge of the opening must be at least 0.5 in. (13 mm) from the rim as measured along the outside contour.

4.38 *Yo Yo Elastic Tether Toys*—These requirements are intended to address potential strangulation hazards associated with yo yo elastic tether toys intended for children 3 years of age or older. Paddle balls are excluded from this requirement.

4.38.1 Toys with an end mass greater than 0.02 kg (0.04 lb) shall have cord length less than 50 cm (20 in.) measured when rotating at 80 r/min. Testing shall be conducted in accordance with 8.24.

4.39 *Magnets*—This requirement is intended to address ingestion hazards associated with toys intended for children over 3 years and up to 8 years of age that contain a hazardous magnet. This requirement does not apply to magnets used in motors, relays, speakers, electrical components, and similar devices where the magnetic properties are not part of the play pattern of the toy.

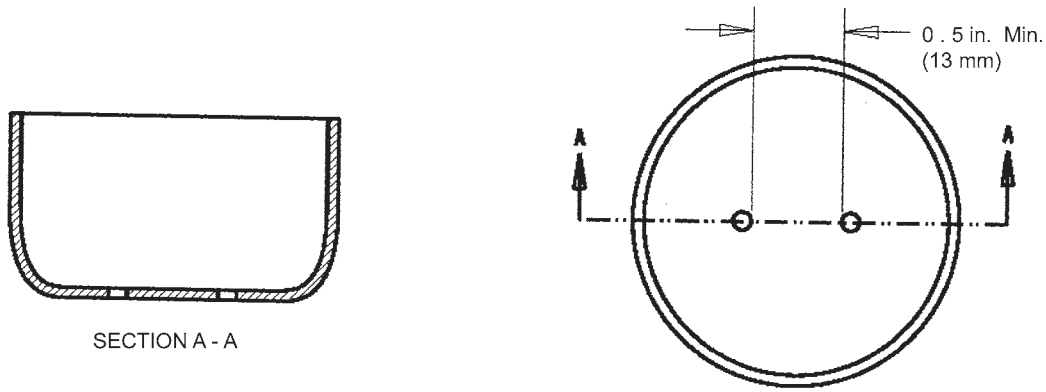

FIG. 20 Openings in Base of Bowl

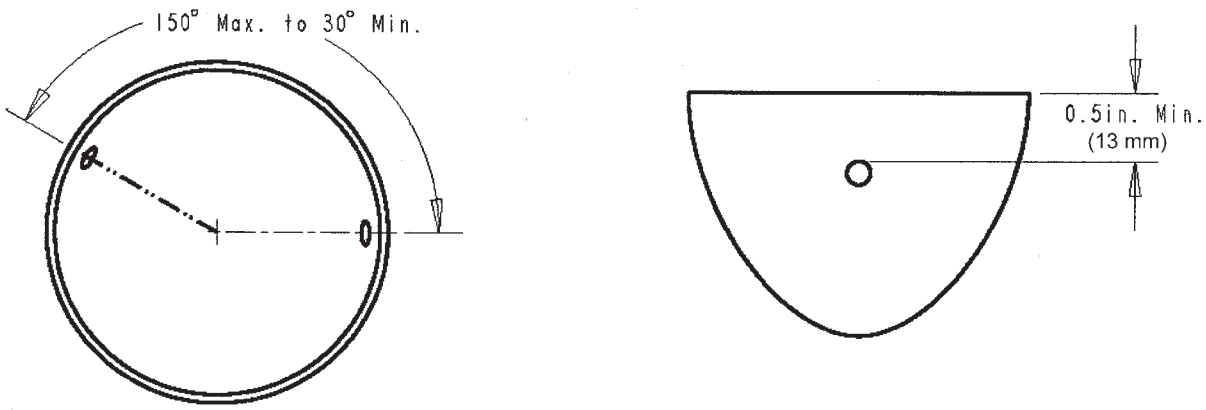

FIG. 21 Opening Placement

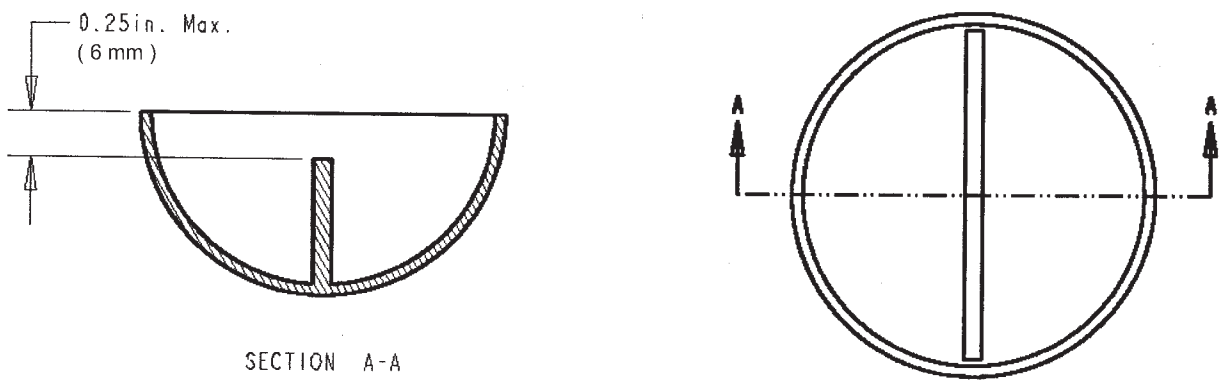

FIG. 22 Rib Through Cup Center

4.39.1 Toys containing a loose as-received hazardous magnet or a loose as-received hazardous magnetic component shall comply with the requirements for safety labeling described in 5.17.

4.39.2 Toys shall not liberate a hazardous magnet or hazardous magnetic component after being tested in accordance with 8.5 through 8.10.

5. Labeling Requirements

5.1 *Federal Government Requirements*—All toys that fall within the definitions and requirements of the U.S. FHSA shall conform to the labeling requirement of that act. For specific requirements, reference 16 CFR 1500.3, 1500.14, 1500.19, 1500.82, 1500.83, 1500.86, 1500.121, 1500.122, 1500.123, 1500.125, 1500.126, 1500.127, 1500.128, 1500.130, 1505.3, and 1511.7. In addition, state labeling requirements may exist.

5.2 *Age Grading Labeling*—Toys that are subject to any of the requirements of this specification should be labeled to indicate the minimum age for intended use or have such labeling on any retail packaging. If the toy or toy package is not age labeled in a clear and conspicuous manner or, based on such factors as marketing practices and the customary patterns

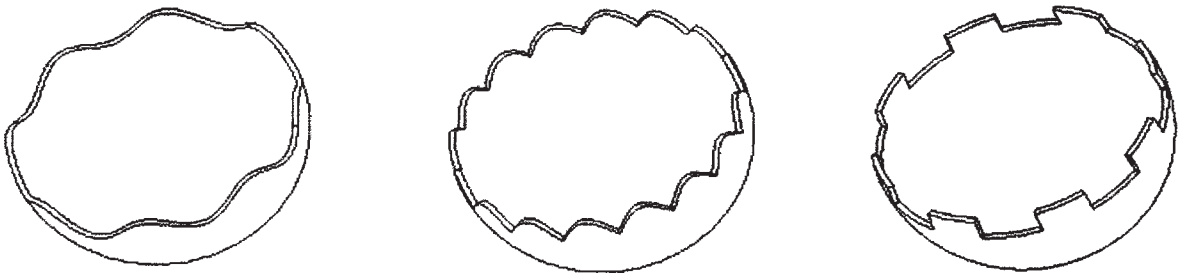

FIG. 23 Scalloped Edge Pattern

of usage of the toy by children, is inappropriately age labeled, the toy shall be subjected to the most stringent applicable requirements within this specification. (Examples: (*1*) a tensile force of 15 lbf (67 N) shall be required instead of 10 lbf (45 N) when testing in accordance with 8.9 if no limiting age range is specified; (*2*) the "highest age of the age range" in 4.15 would be 14 years, the maximum age addressed in the scope of this specification.)

5.2.1 For certain toys, such as costumes and riding toys, it may also be appropriate to label the toy or its package, or both, in terms of height or weight limitations.

5.2.2 Guidelines for determining the appropriate age grade for toys are provided in Annex A1 of this specification.

5.3 *Safety Labeling Requirements*—Certain toys, and in some cases their packages, are required to carry safety labeling to comply with this specification.

5.3.1 Required safety labeling shall consist of an alert symbol (an exclamation mark within an equilateral triangle), a signal word (CAUTION or WARNING), and text that describes the hazard that is present. Additionally, safety labeling may contain text about what to do or not to do to avoid injury (for example, "Keep out of baby's reach"). The signal word shall be in all upper case sans serif letters not less than ⅛ in. (3.2 mm) in height and shall be center or left aligned. The alert symbol shall directly precede the signal word. The height of the triangle shall be at least the same height as the signal word. The height of the exclamation point shall be at least half the height of the triangle and be centered vertically in the triangle. Text describing the hazard(s) and hazard avoidance behavior(s) shall appear in sans serif lettering and shall be either left aligned or center justified. Capital letters shall be no less than 1⁄16 in. (1.6 mm). Recognizing space constraints, it is recommended, that where possible, such text begin on the next line below the signal word, and that a new line be used for each subsequent statement or separate thought.

5.3.2 Sections 5.4, 5.5, 5.6, 5.7, 5.11, and 5.15 require the signal word WARNING. When no signal word is specified for safety labeling in accordance with 5.3, it is recommended that the signal word CAUTION be used to indicate a potentially hazardous situation which could result in minor or moderate injury, and that the signal word WARNING be used to indicate a potentially hazardous situation which could result in death or serious injury.

5.3.3 Sections 5.11 and 5.15 specify required text describing the hazard(s) and hazard avoidance behavior(s). When no required text is specified for safety labeling in accordance with 5.3, the text is left to the discretion of the manufacturer. Sections 5.4, 5.5, 5.6, 5.7, and 5.15.1.1 provide recommended text to describe the hazard(s) and hazard avoidance behavior(s).

5.3.4 The required safety labeling described throughout Section 5 shall be on the principal display panel.

5.3.5 For toy items packed as premiums in or on a package containing other items, safety labeling shall be on the toy package, and similar labeling shall appear on the larger package.

5.3.6 All safety labeling shall be conspicuous and legible, shall be separated distinctively from any other wording or designs, and shall appear in the English language at a minimum. Such labeling shall be clearly visible to the intended audience and shall be in a color contrasting with the background on which it appears.

5.3.7 When safety labeling is printed onto the toy itself using a decoration process such as hot stamping, silk screening, or a similar process, it shall remain legible after normal use and reasonably foreseeable abuse when tested in accordance with 8.5-8.10.

5.3.8 When safety labeling is affixed to a toy in the form of an applied label, the label shall be applied so that it adheres firmly to the toy and none of its edges is lifted off the surface of the toy. Such label shall remain legible after normal use and reasonably foreseeable abuse when tested in accordance with 8.5-8.10.

5.4 *Aquatic Toys*—Aquatic toys and their packages shall carry safety labeling in accordance with 5.3, consisting of the signal word "WARNING" and contain, at a minimum, the following text or equivalent text which clearly conveys the same warning: *This is not a lifesaving device. Do not leave child unattended while device is in use.* In addition, no advertising copy or graphics shall state or imply that the child will be safe with such a toy if left unsupervised.

5.5 *Crib and Playpen Toys*—This requirement is applicable to toys intended to be strung across a crib or playpen by means of string, cord, elastic, or straps (including, but not limited to, crib exercisers, crib gyms, and activity toys).

5.5.1 *Age Grading*—Crib and playpen toys, as well as their packages, shall be labeled with the following text or equivalent information (text or graphic), which clearly conveys the age grade: *from birth to 5 months*.

5.5.2 *Safety Labeling*—Crib and playpen toys shall carry safety labeling, in accordance with 5.3, consisting of the signal word "WARNING" and contain, at a minimum, the following

text or equivalent text which clearly conveys the same warning: *Possible entanglement or strangulation. Remove toy when baby begins to push up on hands and knees.*

5.6 *Mobiles*—This section addresses all mobiles intended to be attached to a crib, playpen, wall, or ceiling.

5.6.1 *Age Grading*—Mobiles intended to be attached to a crib or playpen, as well as their packages, shall be labeled with the following text or equivalent information (text or graphic), which clearly conveys the age grade: *from birth to 5 months*.

5.6.2 *Safety Labeling*:

5.6.2.1 Mobiles intended to be attached to a crib or playpen, and mobiles intended to be attached to a crib or playpen and later moved to a wall or ceiling, as well as their packages, shall carry safety labeling in accordance with 5.3. The labeling shall consist of the signal word "WARNING" and contain, at a minimum, the following text or equivalent text which clearly conveys the same warning: *Possible entanglement injury. Keep out of baby's reach. Remove mobile from crib or playpen when baby begins to push up on hands and knees.*

5.6.2.2 Mobiles intended to be attached only to a wall or ceiling, as well as their packages, shall carry safety labeling in accordance with 5.3. The labeling shall consist of the signal word "WARNING" and contain, at a minimum, the following text or equivalent text which clearly conveys the same warning: *Possible entanglement injury. Keep toy out of baby's reach*.

5.7 *Stroller and Carriage Toys*—Toys intended exclusively to be strung across strollers or carriages by means of string, cords, elastic, or straps shall carry safety labeling in accordance with 5.3. The labeling shall consist of the signal word "WARNING" and contain, at a minimum, the following text or equivalent text which clearly conveys the same warning: *Possible entanglement or strangulation injury when attached to crib or playpen. Do not attach to crib or playpen*.

5.8 *Toys Intended to be Assembled By an Adult*—Packages of toys that are intended to be assembled by an adult and that in their unassembled state contain potentially hazardous sharp edges or points, or small parts if the toy is intended for children under 3 years of age, shall carry safety labeling in accordance with 5.3 stating that the toy is to be assembled by an adult.

5.9 *Simulated Protective Devices*—Toys that simulate safety protective devices (examples include, but are not limited to, construction helmets and sports helmets), as well as their packages, shall carry safety labeling as defined in 5.3, stating that these toys are not safety protective devices.

5.10 *Toys with Functional Sharp Edges or Points*—Toys that are intended for use by children between the ages of 48 and 96 months, which contain accessible potentially hazardous sharp edges or sharp points that are a necessary part of the function of the toy, shall carry safety labeling on their packages as defined in 5.3, stating that a sharp edge or sharp point, or both, exists.

5.11 *Small Objects, Small Balls, Marbles, and Balloons*:

5.11.1 The packages of small balls, marbles, balloons, and certain toys and games, any descriptive material that accompanies them, and, if unpackaged and unlabeled, any retail display container provided by manufacturers or importers shall carry safety labeling in accordance with 16 CFR 1500.19(b).

5.11.1.1 In accordance with 16 CFR 1500.19(d), all labeling statements required by 5.11 shall appear at least in the English language on the principal display panel (except under 5.11.7) and shall be blocked together within a square or rectangular area, with or without a border. The label design, the use of vignettes, or the proximity of other labeling or lettering shall not obscure or render inconspicuous any labeling statement.

5.11.1.2 The statements required by 5.11 must appear on at least two lines and appear on a solid background and be separated from all other graphic material by a space no smaller than the minimum allowable height of the type size for "other cautionary material" (for example the phrase "Not for children under 3 yrs."). If not separated by that distance, the labeling statements must be surrounded by a border line.

5.11.1.3 All labeling statements required by 5.11 shall comply with the following type size requirements based on the computed area of the principal display panel. For these purposes, Signal Word means the word "Warning" and the words "Safety Warning"; Statement of Hazard means "Choking Hazard"; Other Material means all other remaining statements.

Area, in.^{2}	0–2	+2–5	+5–10	+10–15	+15–30	+30–100	+100–400	+400
Type Size—Signal Word	$^3/_{64}$ in.	$^1/_{16}$ in.	$^3/_{32}$ in.	$^7/_{64}$ in.	$^1/_8$ in.	$^5/_{32}$ in.	$^1/_4$ in.	$^1/_2$ in.
Type Size—Statement of Hazard	$^3/_{64}$ in.	$^3/_{64}$ in.	$^1/_{16}$ in.	$^3/_{32}$ in.	$^3/_{32}$ in.	$^7/_{64}$ in.	$^5/_{32}$ in.	$^1/_4$ in.
Type Size—Other Material	$^1/_{32}$ in.	$^3/_{64}$ in.	$^1/_{16}$ in.	$^1/_{16}$ in.	$^5/_{64}$ in.	$^3/_{32}$ in.	$^7/_{64}$ in.	$^5/_{32}$ in.

5.11.1.4 An equilateral triangle with an exclamation point (shown in 5.11.2) shall precede the signal word. The height of the triangle shall be equal to or exceed the height of the letters of the signal word "WARNING" and separated from it by a distance at least equal to the space occupied by the first letter of the signal word. The height of the exclamation point shall be at least half the height of the triangle, and be centered vertically in the triangle.

5.11.2 For toys and games intended for children at least 3 years old but less than 6 years of age, and which contain as-received small part(s), the labeling shall read:

⚠ WARNING:
CHOKING HAZARD—Small parts.
Not for children under 3 yrs.

5.11.3 For any small ball intended for children 3 years of age or older the labeling shall read:

⚠ WARNING:
CHOKING HAZARD—Toy contains a small ball.
Not for children under 3 yrs.

5.11.3.1 For any toy or game intended for children who are at least 3 years old but less than 8 years of age that contains a small ball the labeling shall read:

⚠ WARNING:
CHOKING HAZARD—Toy contains a small ball.
Not for children under 3 yrs.

5.11.4 For any marble intended for children 3 years of age or older the labeling shall read:

⚠ WARNING:
CHOKING HAZARD—This toy is a marble.
Not for children under 3 yrs.

5.11.4.1 For any toy or game intended for children who are at least 3 years of age but less than 8 years of age that contains a marble the labeling shall read:

⚠ WARNING:
CHOKING HAZARD—Toy contains a marble.
Not for children under 3 yrs.

5.11.5 For any latex balloon or any toy or game that contains a latex balloon, the labeling shall read:

⚠ WARNING:
CHOKING HAZARD—Children under 8 yrs. can choke or suffocate on uninflated or broken balloons.
Adult supervision required.

Keep uninflated balloons from children.
Discard broken balloons at once.

5.11.6 *Combination of Labeling Statements*—The labels of products that contain more than one item subject to the requirements of 5.11 may combine information, if the condensed statement contains all of the information necessary to describe the potential hazard associated with each product. For products that contain a balloon *and* a small ball, small object, or marble, only the signal word and statement of hazard may be combined.

5.11.7 *Alternative Labeling Statements for Items Subject to the Requirements of 5.11*—Labeling statements on small packages of toys or balloons that have a principal display panel of 15 in.^{2} or less and that display cautionary statements in three or more languages may appear on a display panel other than the principal display panel if the principal display panel bears the appropriate statement below and bears an arrow or other indicator pointing toward or directing the purchaser's attention to the display panel on the package where the full labeling statement appears.

5.11.7.1 For a toy or game that is or contains a small object, small ball, or marble:

⚠ SAFETY WARNING

5.11.7.2 For a balloon or a toy or game that contains a balloon:

⚠ WARNING—Choking Hazard

5.12 *Toy Caps*—Refer to 16 CFR 1500.86 for required labeling.

5.13 *Art Materials*—Toys and components of toys that fall within the definition of art material as found in 16 CFR 1500.14 (b) (8) shall be labeled in accordance with the provisions of that section and Practice D 4236.

5.14 *Electric Toys*—Refer to 16 CFR 1505.3 for required labeling.

5.15 *Battery-Operated Toys*—Toys with non-replaceable batteries that are accessible with the use of a coin, screwdriver, or other common household tool shall bear a statement that the battery is not replaceable. If the manufacturer determines that it is impractical to label the product, this information shall be placed on the packaging or in the instructions.

5.15.1 *Battery-Powered Ride-on Toys*:

5.15.1.1 Battery powered ride-on toys shall carry safety labeling in accordance with 5.3, consisting of the signal word "WARNING" and contain, at a minimum, text which clearly conveys the following:

(a) To reduce the risk of injury, adult supervision is required. Never use in roadways, near motor vehicles, on or near steep inclines or steps, swimming pools or other bodies of water; always wear shoes, and never allow more than ____ rider(s)

(b) RISK OF FIRE. Do not bypass. Replace only with ____. (Note: This warning must be placed at the location of any user replaceable fuse or circuit protection device. Manufacturer should state the part number or equivalent.

5.15.1.2 The packaging or point-of-sale literature of battery-powered ride-on toys shall state the manufacturer's recommended user age or weight limitations for use of the toy, or both.

5.15.1.3 The packaging or point-of-sale literature of battery-powered ride-on toys shall bear the warnings as specified in 5.15.1.

5.16 *Promotional Materials*—Packaging, literature accompanying toys, and point-of-sale presentations shall not use words, statements, or graphics that are inconsistent in any way with the safety labeling instructions for use or assembly or age grading of the toy.

5.17 *Magnets*—The packaging of toys intended for children over 3 years and up to 8 years of age which contain loose as-received hazardous magnets or loose as-received hazardous magnetic components, as well as their instructions, shall carry safety labeling in accordance with 5.3. The labeling shall consist of the signal word "WARNING" and contain, at a minimum, the following text or equivalent text which clearly conveys the same warning: *This product contains (a) small magnet(s). Swallowed magnets can stick together across intestines causing serious infections and death. Seek immediate medical attention if magnet(s) are swallowed or inhaled.*

6. Instructional Literature

6.1 *Definition and Description*—Information and instructions that are provided for the safe use or assembly, or both, of a toy, whether on the package or in leaflet form, shall be easy to read and understand by persons of the age level for whom the instructions and information are intended, including, if appropriate, children for whom the toy is intended. All such literature shall be shown in the English language at a minimum.

6.2 *Toy Chests*—Instructions for proper assembly and maintenance shall be provided in sufficient detail to describe the correct assembly of components, the resulting hazard if the lid support device is not installed, and a description of how to determine whether the support is working properly.

6.3 *Crib and Playpen Toys*—Toys intended to be strung across a crib or playpen by means of string, cords, elastic, or straps (including, but not limited to, crib exercisers, crib gyms, and activity toys) shall be provided with instructions for proper assembly, installation, and use to insure that the product does not present an entanglement or strangulation hazard. The instructions shall include at least the following information:

6.3.1 This toy is not intended to be "mouthed" by the baby and should be positioned clearly out of reach of the baby's face and mouth.

6.3.2 On cribs with adjustable mattress levels, the highest position may allow the toy to be too close to the baby. The second or lower position is more appropriate.

6.3.3 The drop side of the crib should never be lowered with the toy in place and the baby left unattended.

6.3.4 Always attach all provided fasteners (strings, straps, clamps, etc.) tightly to a crib or playpen according to the instructions. Check frequently.

6.3.5 Do not add additional strings or straps to attach to a crib or playpen.

6.4 *Mobiles*—Mobiles intended to be mounted on a crib, playpen, or wall or ceiling nearby shall be provided with instructions for proper assembly, installation, and use to insure that the product does not present an entanglement hazard. The instructions shall include at least the following information:

6.4.1 A crib mobile is intended for visual stimulation and is not intended to be grasped by the child.

6.4.2 If attached to the crib or playpen, remove when baby begins to push up on hands and knees. If so designed, mount on wall or ceiling clearly out of a standing baby's reach.

6.4.3 If mounted on a wall or ceiling, install the mobile clearly out of a standing baby's reach.

6.4.4 Always attach all provided fasteners (strings, straps, clamps, etc.) tightly to a crib or playpen according to the instructions. Check frequently.

6.4.5 Do not add additional strings or straps to attach to a crib or playpen.

6.5 *Toys Intended to be Assembled By an Adult*—Assembly instructions that accompany toys that are intended to be assembled by an adult and that in their unassembled state contain potentially hazardous sharp edges or sharp points, or small parts if the toy is intended for children under 3 years of age, shall carry safety labeling as defined in 5.3 and also state that the toy is to be assembled by an adult.

6.6 *Battery-Operated Toys*—For toys that use more than one battery in one circuit, the instructions or the toy shall be marked with the following (or equivalent) information.

6.6.1 Do not mix old and new batteries.

6.6.2 Do not mix alkaline, standard (carbon-zinc), or rechargeable (nickel-cadmium) batteries.

6.6.3 Instructions supplied with battery-powered ride-on toys shall contain guidance for safe use and maintenance of the toy. The instructions shall include at least the following:

6.6.3.1 Maximum weight or age limitations, or both, for safe use of the toy,

6.6.3.2 The kinds of surfaces which are appropriate for safe use of the toy,

6.6.3.3 The warning statements contained in 5.15.1.1,

6.6.3.4 Only use the battery(ies) specified by the manufacturer, and

6.6.3.5 Only use the charger(s) specified by the manufacturer.

6.7 *Toys in Contact with Food*—The packages or instructions, or both, for toys and their components intended to be used in contact with food shall be labeled to alert caregivers to wash the product thoroughly before use.

7. Producer's Markings

7.1 Either a principal component of a toy or the package of a toy shall be marked with the name and address of the producer or the distributor. In the case of toys sold in bulk, such as jacks or marbles, only the container need be marked. All of these markings shall be legible and so positioned as to be seen easily by the customer and shall resist normal use conditions. Toys may carry a code that will enable the producer to identify model changes except for toys comprising many loose components, in which case the container may be so coded.

7.2 *Toy Chests*:

7.2.1 Each toy chest shall be labeled permanently and conspicuously to identify the name and address (city, state, and zip code) of either the manufacturer, distributor, or seller.

7.2.2 A code mark or other mark shall be provided on the toy chest and either the packaging or shipping container that will identify the date (month and year) of manufacture and permit future identification of any given model.

7.2.3 The manufacturer shall change the model number whenever the toy chest undergoes a significant structural design, or material modification, or a change that affects its conformance with this consumer safety specification.

7.3 *Battery-Powered Ride-on Toys*—Battery-powered ride-on toys shall bear a permanent label or marking identifying the manufacturer or distributor, place of business, the model numbers, and a date of manufacture or date code that will allow determination of, at a minimum, the month and year of manufacture.

8. Test Methods

8.1 *General*—The inspection and test procedures contained herein are to be used to determine the conformance of products to the requirements of this specification. All types of toys covered by this specification must undergo the normal use and abuse tests in accordance with 8.5-8.10. The remaining tests in this section apply to types of toys as specified within the requirements of Section 4. The relevant tests for a type of toy can be performed in any order except where specified. Each test may be conducted on a different toy unless otherwise specified. The tests can be considered as qualification tests and not necessarily as quality control tests. These tests shall also be conducted when there is a design or material change in the toy. Each producer or distributor who represents his products as conforming to this specification may use statistically based sampling plans that are appropriate, but he shall keep such essential records as are necessary to document with a high degree of assurance his claim that all of the requirements of this specification have been met. Any test methods that are made mandatory by the CPSC shall supersede any applicable test methods in this section.

8.2 *Testing for Hazardous Substance Content*—The applicable sections of 16 CFR, issued under the FHSA to be used for determining the presence of hazardous substances, are given in Table 4. The references in Table 4 refer to the regulations issued on Sept. 27, 1973.

NOTE 5—The latest issue of the regulation shall be used to determine compliance of the toy with the requirements of this specification. The requirements of the FHSA are mandatory by law.

TABLE 4 Determination of Hazardous Substance Content

Hazardous Substance	Regulation (Title 16 CFR)
Toxic substance	1500.3(b)5, 1500.3(c)2, and 1500.40
Corrosive substance	1500.3(b)7, 1500.3(c)3, and 1500.41
Irritant substance	1500.3(b)8, 1500.3(c)4, 1500.41, and 1500.42
Strong sensitizer	1500.3(b)9, 1500.3(c)5, and 1500.13
Pressure-generating substance	1500.3(c)7
Radioactive substance	1500.3(b)11 and 1500.3(c)8
Flammability	1500.3(b)10, 1500.3(c)6, 1500.43, and 1610.

8.3 *Method to Dissolve Soluble Matter*—Soluble elements are extracted from toys under conditions that simulate the situation in which the materials stay 4 h in the alimentary tract after swallowing. The content of soluble elements in the extract is determined.

8.3.1 *Apparatus*—Normal laboratory apparatus and the following:

8.3.1.1 *Metal Sieve*, plain weave wire mesh stainless steel metal sieve with a nominal opening of 0.5 mm and the following specifications:

(1) Nominal wire diameter: 0.315 mm,

(2) Maximum size deviation for an individual opening: +0.090 mm,

(3) Tolerance for average opening: ±0.018 mm, and

(4) 6 % or less of the openings to exceed the nominal plus: +0.054.

8.3.1.2 *pH*, a means of measuring pH with a minimum accuracy of 0.2 pH units.

8.3.1.3 *Membrane Filter*, with a pore size of 0.45 µm.

8.3.2 *Reagents*—Use only reagents of recognized analytical grade during the analysis.

8.3.2.1 Hydrochloric acid solution, 0.07 mol/L.

8.3.2.2 Hydrochloric acid solution, approximately 2.0 mol/L (7.3 % m/m).

8.3.2.3 Type 3 water in accordance with Specification D 1193 or Grade 3 water in accordance with ISO 3696.

8.3.2.4 *Centrifuge*, capable of achieving 5000 ± 500 g.

8.3.2.5 *Container*, of gross volume between 1.6 and 5.0 times that of the volume of HCL extractant.

8.3.3 *Preparation of Test Samples*—A laboratory sample for testing shall consist of a toy in the form in which it is marketed, excluding the package and packaging components.

(1) The test sample shall be taken from the accessible portions of a single toy sample.

(2) Identical materials in the sample may be combined and treated as a single sample. A single sample may not consist of more than one material or color (that is, composite testing is not allowed).

(3) The test sample can alternatively be taken from materials in a form such that they are representative of the relevant material specified above.

(4) When a toy is intended to be taken apart or can be taken apart without the use of tools, each piece shall be considered separately.

(5) For reference purposes, the sample may be taken from the raw material rather than scraped from the sample.

8.3.3.1 Scrape the coating off the test sample, and grind it through the sieve. Obtain a portion of not less than 100 mg of the resulting material.

(1) Where there is only between 10 and 100 mg of uniformly ground material available, test that quantity and calculate the results as if 100 mg of the sample had been available. The report should note this procedure and the actual sample account.

(2) If there is less than 10 mg of sample available, the test is not performed.

(3) In the case of coatings that by their nature cannot be ground (for example, elastic, rubber, or plastic paint), test the sample as it was removed from the toy.

NOTE 6—The methods and exclusions given in 8.3.3.1 do not apply to surface coatings being tested for total lead content as required by 16 CFR 1303. Total lead determination under CPSC requirements at 16 CFR 1303 applies to any coating that can be scraped off, regardless of the amount with results calculated based on the actual sample weight.

8.3.4 *Test Procedures*:

8.3.4.1 Prepare a test portion in accordance with 8.3.3.

8.3.4.2 Mix the test portion so prepared with 50 times its mass of an aqueous solution of 0.07 mol/L hydrochloric acid at 37 ± 2°C. In the case of a test portion of less than 100 mg, mix the test portion with 5.0 mL of this solution at the given temperature. Shake for 1 min.

(1) Check the acidity of the mixture. If the pH is greater than 1.5, add dropwise while shaking an aqueous solution of 2 mol/L (7.3 % m/m) hydrochloric acid until the pH is between 1.0 and 1.5. Protect the mixture from light. Shake the mixture efficiently for 1 h continuously, and then allow the mixture to stand for 1 h at 37 ± 2°C.

NOTE 7—It has been shown that the extraction of soluble cadmium can reveal a two-fold to five-fold increase when extraction is conducted in the light rather than the dark.

(2) Without delay, separate the solids from the mixture by filtration through a membrane filter with a pore size of 0.45 µm. If necessary, centrifuge at 5000 g for no longer than 10 min. Examine the solution to determine the presence of the elements identified in 4.3.5.2. If it is not possible to examine the sample within one working day, stabilize by the addition of hydrochloric acid so that the resulting solution is approximately 1 mol/L of HCL.

(3) If necessary, centrifuge the mixture and separate the solids from the mixture by filtration through a membrane filter with a pore size of 0.45 µm, and examine the resulting solution to determine the presence and quantity of the elements identified in 4.3.5.2. Take care to insure the stability of the solution if it is not possible to examine within one working day.

8.3.4.3 The analytical results as determined in 8.3 shall be adjusted by subtracting the analytical correction factor in the

following table using the following method. This is necessary to make statistical correction for interlaboratory error.

	Analytical Correction							
Element	Sb	As	Ba	Cd	Cr	Pb	Hg	Se
Analytical correction, %	60	60	30	30	30	30	50	60

NOTE 8—*Example of Calculations Using the Table:*

Example 1:

The analytical result for lead is 120 mg/kg; the correction factor from the table is 30 % (0.30).

Adjusted analytical results = 120 – (120 × 0.30) = 120 – 36 = 84 mg/kg.

The result does not exceed the allowed value for lead in the table and is therefore acceptable.

Example 2:

The analytical result for chromium is 90 mg/kg; the correction factor from the table is 30 % (0.30).

Adjusted analytical results = 90 – (90 × 0.30) = 90 – 27 = 63 mg/kg.

The result exceeds the allowed value for chromium in the table and is therefore not acceptable.

8.4 *Tests for Cleanliness and Preservative Effectiveness*:

8.4.1 *Cleanliness of Materials*—The cleanliness of cosmetics, liquids, pastes, putties, gels, and powders used in toys (excluding art materials) shall be determined using the methods in USP 24 <61> Microbial Limits Tests or the most current edition of the U.S. Pharmacopeia.[10] Another method may be substituted provided it has been properly validated as giving equivalent or better results, as specified in USP 24 <61> or the most current edition of the U.S. Pharmacopeia. In conjunction with the chosen test method, the limits for determining the cleanliness of materials will consist of the most current guidelines for cosmetics set forth by the Cosmetic, Toiletry, and Fragrance Association (CTFA).

8.4.2 *Preservative Effectiveness*—The formulations of cosmetics used in toys shall be evaluated for the potential microbiological degradation, or they shall be tested for microbial control and preservative effectiveness using the methods and limits in USP 24 <51> Antimicrobial Effectiveness Testing or the most current edition of the U.S. Pharmacopeia.

8.5 *Normal Use Testing*—These tests are intended to simulate normal use conditions so as to ensure that hazards are not generated through normal wear and deterioration. The object of these tests shall be to simulate the normal play mode of the toy, and the tests are therefore unrelated to the reasonably foreseeable abuse tests of 8.6-8.13. The tests are intended to uncover hazards rather than to demonstrate the reliability of the toy. The fact that a mechanism or material of a toy fails during testing is relevant only if the failure creates a potential hazard. Toys shall be subject to appropriate tests to simulate the expected mode of use of the particular toy. For example, levers, wheels, catches, triggers, strings, wires, chains, and so on, that are intended to be actuated by a child shall be operated repeatedly. Spring or power-operated devices shall be tested similarly. The tests shall be conducted in an expected use environment. For example, toys intended for use in the bathtub shall be tested in soapy water, and toys intended for use in the sandbox shall be exposed to sand during testing. It is recognized that no specific requirements are defined here; it would not be possible in view of the wide range of toys covered by this specification. However, the manufacturer or distributor must do enough testing to satisfy himself that normal use during the estimated lifetime of the toy is being simulated. The toy shall be inspected after such tests, and hazards such as points, sharp edges, and release of small parts shall be evaluated in accordance with the relevant requirements listed in Section 4.

8.5.1 *Washable Toys*—Toys described as machine washable on the toy, package, or instructions shall be subjected to six machine washing and tumble drying cycles, as described in 8.5.1.1, unless a different drying method is specified by the toy manufacturer by means of a permanent label. They shall then be inspected for compliance with this specification.

8.5.1.1 *Conditions for Machine Washing and Tumble Drying*—Any commercially available top-loading washer, dryer, or laundry detergent intended for use in the home may be used for this test. The weight of each toy is determined prior to the beginning of the test. The toys, plus a dummy load of clothes sufficient to bring the total dry weight to a minimum 4 lb (1.8 kg), are washed in an automatic washing machine using the warm water setting and a 12-min wash cycle at the normal setting. The toys and dummy load shall then be tumble dried in an automatic clothes dryer using the warm setting, or air dried, until the load is dried. The toy shall be deemed dry when the final weight does not exceed the original dry weight by more than 10 %.

8.6 *Abuse Testing*—The tests described in 8.7-8.13 are to simulate the exposure of a toy to mechanical damage through dropping, throwing, and other actions likely to be performed by a child, which are characterized as reasonably foreseeable abuse. After testing, the toy shall be examined for mechanical hazards, such as hazardous sharp edges and points, and ingestion hazards, such as small liberated components, chips, or fragments. The severity of the abuse tests described in 8.7, 8.8, 8.9, 8.10, and 8.12 shall be determined according to the age group for which the toy is intended. If the toy is intended for an age group that spans more than one age group according to Table 5, the toy shall be subjected to the most severe test. Unless otherwise specified, none of the abuse testing described in 8.7-8.12 applies to toys intended for children over 96 months of age. Toys reasonably intended to be assembled by an adult, and not intended to be taken apart by a child, shall be tested only in the assembled state if the shelf package and assembly instructions indicate prominently that the article is to be assembled by an adult. Individual parts of toys that are intended to be assembled by children shall be tested as well as the fully assembled toy; however, the assembled toy shall be made of components that have not been subjected to the abuse testing.

8.7 *Impact Tests*—These tests are intended to simulate situations in which possible damage can occur to a toy by reason of its falling from a crib, table, or counter top, or other impact situations that may occur as a result of reasonably foreseeable abuse. After undergoing the appropriate test, the

[10] *Reagent Chemicals, American Chemical Society Specifications* , American Chemical Society, Washington, DC. For Suggestions on the testing of reagents not listed by the American Chemical Society, see *Analar Standards for Laboratory Chemicals,* BDH Ltd., Poole, Dorset, U.K., and the *United States Pharmacopeia and National Formulary,* U.S. Pharmacopeial Convention, Inc. (USPC), Rockville, MD.

TABLE 5 Test Parameters for Use and Abuse Tests

Test	Age Category of Intended User, months	Numerical Value	
		Stated by the Voluntary Standard	Recommended for Toy Manufacturers
Impact test	0 to 18	10 × 4.5 ft ± 0.5 in. (137 cm)	4 ft, 6.5 in. (1.38 m)
	over 18 to 36	4 × 3.0 ft ± 0.5 in. (91 cm)	3 ft, 0.5 in. (0.93 m)
	over 36 to 96	4 × 3.0 ft ± 0.5 in. (91 cm)	3 ft, 0.5 in. (0.93 m)
Torque test	0 to 18	2 ± 0.2 in.·lbf (0.23 N·m)	2.2 in.·lbf (0.25 N·m)
	over 18 to 36	3 ± 0.2 in.·lbf (0.34 N·m)	3.2 in.·lbf (0.36 N·m)
	over 36 to 96	4 ± 0.2 in.·lbf (0.45 N·m)	4.2 in.·lbf (0.47 N·m)
Tension test	0 to 18	10 ± 0.5 lbf (44.5 N)	10.5 lbf (46.7 N)
	over 18 to 36	15 ± 0.5 lbf (66.8 N)	15.5 lbf (69.0 N)
	over 36 to 96	15 ± 0.5 lbf (66.8 N)	15.5 lbf (69.0 N)
Compression test	0 to 18	20 ± 0.5 lbf (89.0 N)	20.5 lbf (91.2 N)
	over 18 to 36	25 ± 0.5 lbf (111.3 N)	25.5 lbf (113.5 N)
	over 36 to 96	30 ± 0.5 lbf (133.5 N)	30.5 lbf (135.7 N)
Flexure test	0 to 18	10 ± 0.5 lbf (44.5 N)	10.5 lbf (46.7 N)
	over 18 to 36	15 ± 0.5 lbf (66.8 N)	15.5 lbf (69.0 N)
	over 36 to 96	15 ± 0.5 lbf (66.8 N)	15.5 lbf (69.0 N)

toy shall be examined for possible hazards, such as points, edges, or ingestible objects, in accordance with the relevant requirement of Section 4.

8.7.1 *Drop Test*—Except for toys covered in 8.7.2, toys falling below the weight limit given below shall be dropped onto a specified impact area. The number of times the toy will be dropped, and the height from which it is dropped, is to be determined from Table 5. The toy shall be dropped in random orientation. The test sample shall be allowed to come to rest after each drop and shall be examined and evaluated before continuing. The impact medium shall consist of a ⅛-in. (3-mm) nominal thickness of Type IV vinyl composition tile, composition 1-asbestos free, as specified in Federal Specification SS-T-312B over at least a 2.5-in. (64-mm) thickness of concrete. The impact area shall be at least 3 ft^2(0.3 m^2). The recommended batteries shall be in place during the drop test for battery-operated toys. If no specific type of battery is recommended, the heaviest battery that is generally available shall be used.

Age Group	Weight Criteria, lb (kg)
18 months or less	less than 3 ± 0.01 (1.4)
over 18 months, not over 36 months	less than 4 ± 0.01 (1.8)
over 36 months, not over 96 months	less than 10 ± 0.01 (4.5)

8.7.2 *Tipover Test for Large, Bulky Toys*—Large, bulky toys shall not be subjected to the drop test of 8.7.1, but they shall be tipped over according to the following procedure:

8.7.2.1 *Tipover Test for Large, Bulky Toys*—Large, bulky toys shall be tested for impact by tipping over three times, one of which is in the worst attitude by pushing the sample slowly past its center of balance onto the impact medium described in 8.7.1.

8.7.3 *Tumble Test for Wheeled Toys*—Wheeled toys weighing more than 3 lb (1.4 kg) but not more than 10 lb (4.5 kg) shall be tumbled down a flight of six steps with risers not less than 7 in. (180 mm) high (see Fig. 24). The treads may be wood, cement, or metal. The toy, including accessories, where applicable, shall be caused to fall down the steps two times in each of four attitudes: tumbling forwardly end-over-end and tumbling rearwardly end-over-end from each side. The toy shall be pushed slowly over the edge of the top step in the appropriate attitude and released as soon as it begins to fall of its own weight. The test shall be considered complete for an attitude even if the toy does not reach the bottom of the flight of steps.

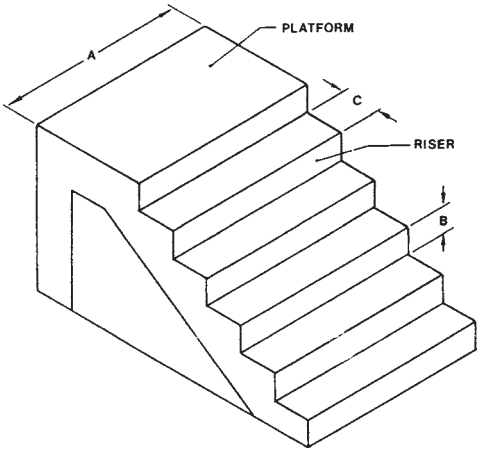

Dimensions
"A" shall be not less than 3 ft (914 mm)
"B" shall be not less than 7 in. (180 mm)
"C" shall be not more than 9 in. (230 mm)

FIG. 24 Illustration of Step Construction

8.7.4 *Impact Test for Toys that Cover the Face*—The toy shall be held firmly in a suitable clamp with that portion that covers or surrounds the eyes (in the case of cutout eye holes) in a horizontal plane. Drop a ⅝-in. (16-mm) diameter steel ball weighing 0.56 oz. (15.8 g) (with a tolerance of +0.03 (0.8 g, –0 oz) from a height of 50 in. (1.3 m) upon the horizontal upper surface of the toy in the area that would cover the eyes in normal use. In the case of toys with cutout eye holes, impact the area that would be directly adjacent to the eyes in normal use. The ball may be guided, but not restricted, in its fall by being dropped through a perforated tube extending to within approximately 4 in. (100 mm) of the toy.

8.8 *Torque Tests for Removal of Components*—Any toy with a projection, part, or assembly that a child can grasp with at least the thumb and forefinger or the teeth shall be subject to this test. The amount of torque shall be determined from Table 5, according to the age group for which the toy is intended. The loading device used in the test shall be a torque gage, torque

wrench, or other appropriate device having an accuracy of ±0.2 in.·lbf (±0.02 N·m). A clamp capable of holding the test component firmly and transmitting a torsional force shall be used. The clamp is fastened to the test object or component with the toy fastened rigidly in any reasonable test position. The torque shall be applied evenly within a period of 5 s in a clockwise direction until either (*1*) a rotation of 180° from the original position has been attained, or (*2*) the required torque is exceeded. The maximum rotation or required torque shall be maintained for an additional 10 s. The torque shall then be removed and the test component permitted to return to a relaxed condition. This procedure shall then be repeated in a counterclockwise direction. Projections, parts, or assemblies that are mounted rigidly on an accessible rod or shaft designed to rotate along with the projections, parts, or assemblies shall be tested with the rod or shaft clamped to prevent rotation. If a component that is attached by a screw thread that has been assembled by the manufacturer, or that has been assembled to the manufacturer's instructions, becomes loosened during application of the required torque, continue to apply the torque until either (*1*) the required torque is exceeded, or (*2*) the part disassembles. The test should be terminated if it becomes obvious that the part under test will continue to rotate at less than the required torque limit and will not disassemble.

8.8.1 If the part disassembles, evaluate it for compliance with the appropriate requirements. If the disassembly exposes an accessible component that can be grasped as noted above, repeat the torque test on that component.

8.9 *Tension Test for Removal of Components*—Any projection of a toy that a child can grasp with at least the thumb and forefinger or the teeth shall be subjected to this test. The tension test shall be performed on the same components of the toy subjected to the torque test described in 8.8. The amount of force used shall be determined from Table 5, according to the age group for which the toy is intended. A clamp capable of applying a tension load to the test component shall be applied in a manner that will not affect the structural integrity of the attachment between the component and the toy. The loading device shall be a self-indicating gage or other appropriate means having an accuracy of ±0.5 lb (±2 N). With the test sample fastened in a convenient position, an appropriate clamp shall be attached to the test object or component. The required tensile force shall be applied evenly, within a period of 5 s, parallel to the major axis of the test component, and maintained for an additional 10 s. The tension clamp shall then be removed, and a second clamp suitable for applying a tension load perpendicularly to the major axis of the test component shall be attached to the test object component. The required tensile force shall be applied evenly, within a period of 5 s, perpendicularly to the major axis of the test component and maintained for an additional 10 s.

8.9.1 *Tension Test for Seams in Stuffed Toys and Beanbag-Type Toys*—A stuffed toy or beanbag constructed of pliable material having seams (including, but not limited to, seams that are stitched, glued, heat sealed, or ultrasonic welded) shall have the seams subjected to a separate tension test in any direction using the forces specified in 8.9 and determined from Table 5 according to the age group for which the toy is intended.

8.9.1.1 The clamps used to grip the material on either side of the seam to be tested shall have jaws to which are attached ¾-in. (19-mm) diameter washers (see Fig. 25). The clamps shall be attached to the cover material of a completely assembled stuffed toy in a manner such that the outside diameter of the ¾-in. (19-mm) washers at a point nearest the seam shall be close to, but no closer than, ½ in. (13 mm) from the edge of the seam stitching thread. This seam test shall not be performed if the material adjacent to the seam cannot be grasped between the thumb and forefinger of the test personnel sufficient for full clamping by the ¾-in. (19-mm) diameter washer jaws. If such is the case, a torque and tension test shall be performed on an arm, leg, or other appendage of the toy instead of the seam test.

8.9.1.2 In performing a seam test, the force appropriate for the age category into which the toy falls (see Table 5) shall be applied evenly within 5 s and maintained for an additional 10 s.

8.10 *Compression Test*—Any area on the surface of a toy that is accessible to a child and inaccessible to flat surface contact during the impact test shall be subject to this test. The compression force shall be determined from Table 5 according to the age group for which the toy is intended.

8.10.1 The loading device shall be a rigid metal disk 1.125 ± 0.015 in. (0.380 mm) in diameter and 0.375 in. (9.52 mm) in thickness. The perimeter of the disk shall be rounded to a radius of 1/32 in. (0.8 mm) to eliminate irregular edge. The disk shall be attached to an appropriate compression scale having an accuracy of ±0.5 lb (2 N). The disk shall be positioned so that the flat contact surface is parallel to the surface under test. The required force shall be applied evenly within 5 s through the disk. This load shall be maintained for an additional 10 s. The toy is to rest on a flat, hard surface in any convenient position during the test.

8.11 *Tests for Tire Removal and Snap-in Wheel and Axle Assembly Removal*—These tests relate to the requirements of 4.17.

8.11.1 *Removal of Tires*—The toy shall be clamped so that the wheel axle is vertical. A wire hook shaped as shown in Fig.

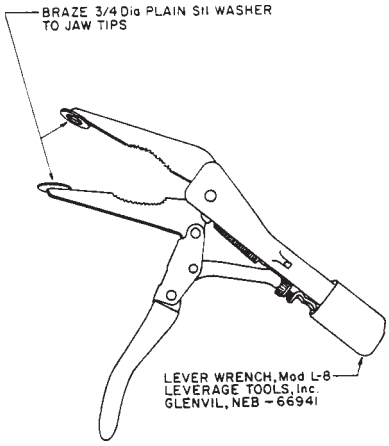

FIG. 25 Seam Clamp

26 shall be positioned on the lower tire and attached to a dead weight of 10 ± 0.5 lb (4.5 kg) if the tire is on a toy intended for children aged 18 months or less, or to a dead weight of 15 ± 0.5 lb (6.8 kg) if the tire is on a toy intended for children aged over 18 months but not over 36 months. The load shall be applied gradually over a period of 5 s and maintained for 10 s.

8.11.2 *Toys Assembled With Snap-in Axles*—A 15 ± 0.5-lb (6.8-kg) dead weight shall be applied perpendicularly to the axle and in the least favorable direction, adjacent to a bearing (but between the two bearings), for 10 s, using a hook and string for attachment to the toy. The toy shall be held horizontally in a test-convenient fixture, and the load shall be applied gradually over a 5-s period and then shall be maintained for 10 s. The toy shall be held horizontally if the axle cannot be hooked as described above, and a 10 ± 0.5-lb (4.5-kg) dead weight shall be attached to one wheel by means of a hook or clamp that acts perpendicular to the axle in the least favorable direction. The load shall be applied gradually over a 5-s period and then be maintained for 10 s.

8.11.3 *Compression Test for Snap-in Wheel and Axle Assemblies*—This test is for determining compliance with 4.17 if the axle and wheel are removed by the procedure described in 8.11.2. The wheel and axle assembly shall be positioned with the axle vertical over a hole in a rigid plate, as shown in Fig. 27. The hole shall be large enough in diameter to permit the axle to pass through. A load of 20 ± 0.5 lb (89 N) is applied to the upper wheel, using a suitable circular adaptor to prevent interference with the axle. The load shall be applied gradually over a 5-s period and then shall be maintained for 10 s. When applying the load, the upper wheel shall be guided, if necessary, in order to maintain the axle in a vertical position, but it shall not be restrained from moving downward. The axle shall not form a hazardous point or projection in those cases in which it is forced through either wheel.

8.12 *Flexure Test*—This test is for determining compliance with 4.10, for wires or rods used as flexible skeletons. The toy shall be secured in a vise equipped with vise shields that are fabricated from 13-gage thick cold-rolled steel or other similar material and that have a 0.375-in. (9.5-mm) inside radius as shown in Fig. 28. The component shall then be bent through a 60° arc by a force applied perpendicularly to the major axis of the component at a point 2 ± 0.05 in. (50 mm) from the intersection of the component with the main body of the toy or applied at the end of the component if the component is less than 2 in. (50 mm) long. The force shall be determined from

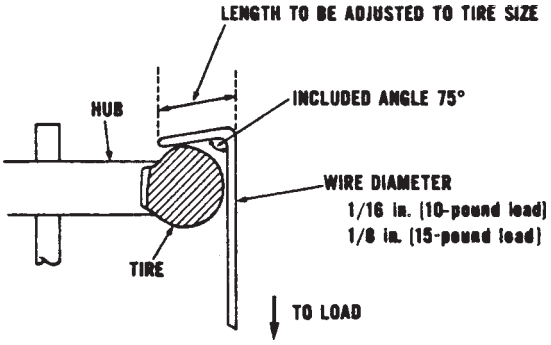

FIG. 26 Hook for Tire Removal

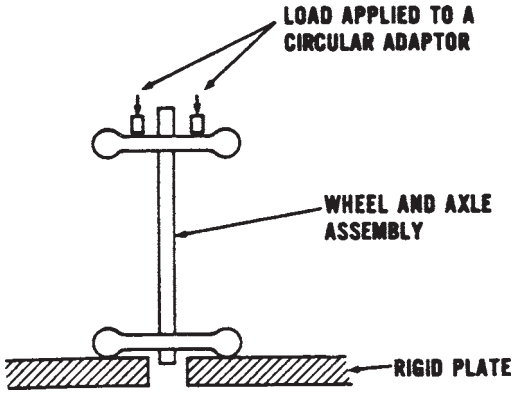

FIG. 27 Compression Test for Wheel Assemblies

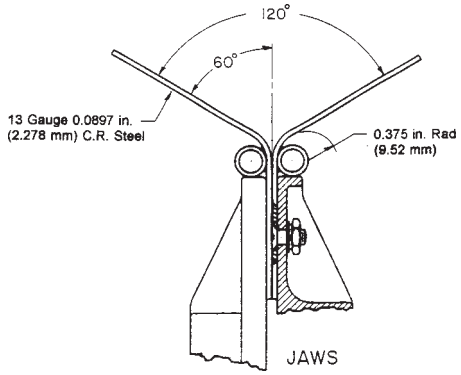

FIG. 28 Flexure Tester

Table 5. The component shall then be bent in the reverse direction through a 120° arc. This process shall be repeated for 30 cycles at a rate of 1 cycle/2 s, with a 60-s rest period occurring after each 10 cycles. Two 120° arc bends shall constitute one cycle.

8.13 *Test for Mouth-Actuated Toys*—A piston pump capable of discharging and taking in more than 18 in.^{3} (295 cm^3) of air in less than 3 s shall be connected to the mouthpiece of the toy. A relief valve shall be so arranged that the pump will not generate a positive or negative pressure of more than 2 psig. The toy shall be subjected to 10 alternating blowing-and-sucking cycles of at least 18 in.^{3} (295 cm^3) of air, including that volume that may be discharged through the relief valve. Any objects released as a result of this test shall be inspected for conformance with 4.6. The above procedure shall also be applied to the outlet if the air outlet of the toy is accessible as described in 4.6.2.

8.14 *Tests for Toy Chest Lids and Closures*—The toy chests shall be assembled in accordance with the manufacturer's instructions before testing.

8.14.1 *Lid Support Mechanisms*:

8.14.1.1 Lift the lid to any position in its arc of travel to a distance greater than 2 in. (50 mm) but not to cause the lid to move through an arc of more than 60° from the lid's fully closed position measured at the outermost edge of the lid. Release the lid, and observe any dropping motion of a point in the approximate center of the outermost edge of the lid.

8.14.1.2 Subject the lid to 7000 opening and closing cycles. One cycle consists of raising the lid from its fully closed position to fully open and returning it to fully closed.

8.14.1.3 Take care not to force the lid beyond its normal arc of travel to prevent undue stress on screws or other fasteners used to attach lid support mechanisms.

8.14.1.4 The time to complete one cycle shall be approximately 15 s. The 7000 cycles shall be completed within a time period of 72 h, after which the test described in 8.14.1.1 should be repeated.

8.14.2 *Closures/Lids*:

8.14.2.1 *Vertically Hinged Lids*—With the lid in a closed position, apply a gradually increasing force in an upward direction perpendicular to the plane of the lid at a point within 1 in. (25 mm) from its geometric center. Record the maximum force to cause the lid to begin to open.

8.14.2.2 *Other Lids, Covers, and Doors*—For all other closures, apply a gradually increasing force in the direction required to open a completely closed toy chest. Record the maximum force to cause the closure to begin to open.

8.15 *Projectiles*:

8.15.1 *Kinetic Energy Determination*—The kinetic energy of a projectile as defined in 3.1.45 shall be determined from the following equation:

$$\text{kinetic energy} = 1/2\, mv^2 \quad (1)$$

where:

m = mass of projectile, kg, and
v = velocity of the projectile, m/s.

8.15.2 The mass of a projectile, m, shall be determined by weighing a sample on a laboratory balance. The velocity of a projectile, v, shall be determined by firing a sample from the discharge mechanism of the toy across ballistic screens placed a known distance apart (s, metres) and recording the time (t, seconds) to travel that distance. The velocity of the projectile shall be calculated from the expression $v = s/t$ m/s.

8.15.3 When performing the test to measure the velocity of a projectile, the second screen shall be placed a distance no more than 1 ft (300 mm) plus one projectile length from the point at which the entire projectile enters free flight (see Fig. 29). Due to the flight characteristics of certain projectiles and other factors that may influence the accuracy of the measurement of projectile velocity, the value of v in the equation for kinetic energy shall be the average of five measurements.

8.15.4 *Impact Test for Projectiles*—Projectiles, as defined in 3.1.52, shall be propelled by their discharge mechanism three times into a concrete block wall (or equivalent surface) located at a distance 1 ft (300 mm) plus the length of the projectile from the front end of the launcher. The discharge mechanism shall be aimed perpendicular to the wall.

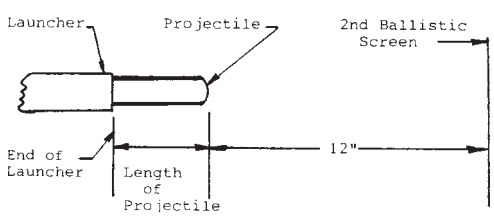

NOTE 1—First ballistic screen to be located between end of launcher and second screen.

FIG. 29 Diagram of Layout to Determine Projectile Velocity

8.16 *Test for Stability of Ride-On Toys*—These tests relate to the requirements of 4.15.

8.16.1 Place the toy across the slope of a smooth surface inclined 10° to the horizontal plane. (Some tests require a 15° slope; refer to 4.15.2.2 and 4.15.3.)

8.16.2 Turn the steering mechanism, if any, to a position at which the toy is most likely to tip.

8.16.3 Chock the wheels to restrict rolling, but allow casters to assume their natural position before chocks are applied.

8.16.4 Apply to the seat a static load equal to the weight indicated in Table 3 at the highest age of the age range for which the toy is intended, but not exceeding 60 months. When the highest age of the intended age range falls between two ages listed in Table 3, the higher of the two shall be chosen. The load shall be applied so that the major axis is perpendicular to the true horizontal while the toy is on the incline specified. The load shall be designed so that the height of its center of gravity is 8.7 ± 0.5 in. (220 ± 13 mm). The center of gravity of the load for all ride-ons shall be secured both 1.7 in. (43 mm) rearward of the front-most portion of the designated seating area and 1.7 in. (43 mm) forward of the rear-most portion of the designated seating area (note: two separate tests). If there is no designated seating area, the load shall be placed at the least favorable position that it is reasonable to anticipate that the child will choose to sit.

8.17 Pompoms are subjected to the torque test as described in 8.8 and 8.8.1 and the tension test as described herein. The clamps used to grip the material to be tested shall have jaws to which ¾-in. (19-mm) diameter washers are attached (see Fig. 25). One clamp shall be attached to the pompom and a second clamp used to grip the base material. A force of 15 lbf (67 N) shall be applied evenly within 5 s and maintained for an additional 10 s.

8.18 *Stalled Motor Test for Battery-Operated Toys*:

8.18.1 The test shall be conducted using a new toy. Each motor shall be tested separately using fresh alkaline batteries. If another battery chemistry is specifically recommended for use in the toy by the manufacturer, repeat the test using the batteries specified by the manufacturer. If the toy will not operate using alkaline batteries, test with the type of battery recommended by the manufacturer at the specified voltage. The test is to be carried out in a draft-free location at an ambient temperature of 20 ± 5°C.

8.18.2 Operate the toy with moving parts that are mechanically linked to a motor locked in a fixed position. Only lock moving parts which can be stalled external to the toy. Do not disable any mechanical or electrical protective device such as clutches or fuses. Monitor the temperatures with the toy fully assembled. If normal use allows the motor to run unattended or if the toy has a non-recessed switch allowing it to be kept in the "on" position, operate the toy continuously and record the maximum temperatures. The test may be discontinued 60 min after the peak temperature of each component being tested is recorded. If the toy shuts off automatically or must be kept "on" by hand or foot, monitor temperatures for 30 s, resetting

the toy as many times as necessary to complete the 30 s of operation. If the toy shuts off automatically after an operating time of greater than 30 s, continue the test until the toy shuts off. At the conclusion of the test, the stalled motor condition shall not cause temperatures to exceed the limits of 4.25.7, or cause battery leakage, an explosion, or a fire.

8.19 *Tests for Battery-Powered Ride-on Toys*:

8.19.1 Components tested in accordance with the following sections are to be installed and operated in the toy, as they would be during normal use unless otherwise specified. Testing is to be conducted using fully charged batteries.[11]

8.19.2 *Maximum Temperature Test*:

8.19.2.1 Mechanically precondition all electrical pressure connections used for charging or discharging the battery(ies). If a main harness connector is provided, the main harness connection must be connected and disconnected 600 times before the Maximum Temperature Test is performed. If a user replaceable fuse is provided, remove and insert the fuse 25 times before the Maximum Temperature test is performed.

8.19.2.2 Power the test sample using a fully charged battery as specified by the manufacturer. Operate the vehicle in the mode that results in the maximum continuous current draw. Determine the maximum continuous current draw by testing the vehicle on any intended surface as specified by the manufacturer, and by adjusting the weight, up to the manufacturer specified maximum. Several trials on different surfaces and with different weights may be necessary to determine the maximum continuous current draw.

8.19.2.3 Physically load the vehicle in any way necessary to obtain the maximum continuous current draw. Operate the vehicle continuously until the battery is exhausted or until thermal equilibrium is reached. If thermal equilibrium is not reached, replace the battery with a fully charged battery and continue the test.

8.19.3 *Stalled Motor Test for Battery-Powered Ride-on Toys*—Mechanically lock any accessible motor driven parts. For toys having more than one motor, each motor shall be tested individually. For toys having more than one operating mode, a different toy shall be tested in each mode. The toy shall be entirely draped with a double layer of cheesecloth during the test. For motors or other electrical components that are accessible, the cheesecloth shall also be draped over the component.

8.19.3.1 Operate the toy, under the stalled condition, until a circuit protection device interrupts the current or until the battery is depleted.

8.19.3.2 If the circuit protection device interrupts the circuit, immediately reset the circuit protection device or replace it in the case of a fuse and repeat the test three more times. If the circuit protection device automatically resets, continue the stalled motor test until the battery is exhausted.

8.19.3.3 The test shall not result in ignition of the cheesecloth.

8.19.4 *Nuisance Tripping Test*—Conduct the tests on a level surface as specified in 8.19.1, loading the vehicle with the maximum weight specified by the manufacturer.

8.19.4.1 *Start/Stop Condition*—Start and stop the toy in 1-s cycles for 30 repetitions (0.5 s start followed by 0.5 s stop) in the mode that draws the greatest current.

8.19.4.2 *Forward/Reverse*—If the toy has a reverse direction feature, cycle the toy in the forward and reverse directions in 1-s cycles for 30 repetitions (0.5 s forward followed by 0.5 s reverse) in the mode that draws the greatest current.

8.19.5 *Switch Endurance and Overload Tests*—Precondition switches at 95 % relative humidity between 20°C and 32°C for 48 h. Conduct the Switch Endurance and Overload Tests at 40°C. A switch is to be operated by means of its actuating member either manually or by mechanical means making and breaking the test current. If a fuse or protective device operates (opens or trips) the device must be replaced or reset as many times as necessary to complete the required number of cycles. The test may be concluded at less than the prescribed number of cycles if the switch fails safe (switch stuck in the "off" position and no short-circuit condition results). Test 3 samples. All samples must pass.

8.19.5.1 *Switch Endurance Test*—If a switch is relied upon for starting and stopping of the vehicle, conduct the endurance test for 100 000 cycles. Cycle (minimum 1 s on time and at least 6 cycles per minute) a switch in the toy using the maximum continuous current load as determined in the Maximum Temperature Test or in an equivalent simulated motor load circuit including the inrush and inductive characteristics. All other switches are to be subjected to 6000 cycles of endurance testing. Cycle (minimum 1 s on time and at least 6 cycles per minute) a switch in the toy using the maximum continuous current load as determined in the Maximum Temperature Test or in an equivalent simulated motor load circuit including the inrush and inductive characteristics.

8.19.5.2 *Switch Overload Test*—The overload test is to be conducted on a switch that is relied upon for starting and stopping of the vehicle. Stall the motor(s) of the toy. Operate the switch for 50 cycles of operation at a rate of 6 cycles per minute with 1 s on and 9 s off.

8.19.6 *Battery Overcharge Test*—Each battery shall be charged with its intended charger continuously for 336 h. The test shall not result in the release of electrolyte, or cause explosion or fire.

8.19.6.1 If the battery can be charged in the vehicle, place the battery in the vehicle and connect it to the charging circuit. Drape the charger, cable, and battery with a double layer of cheesecloth. The test shall not result in ignition of the cheesecloth or in the release of electrolyte.

8.19.7 *Short-Circuit Protection Test*—Entirely drape the toy with a double layer of cheesecloth. Short-circuit parts of opposite polarity. Any possible short-circuit condition shall not result in ignition of the cheesecloth.

8.19.8 *Strain Relief Test*—The electrical connections of the cord or harness are to be disconnected. Apply a 20 lbf (90 N) to the cord so that the strain relief will be stressed from any angle permitted by the construction of the toy. Maintain the

[11] Testing is to be conducted while the vehicle is operated on a hard level surface covered with 3M #610 General Purpose Safety Walk tape or equivalent surface with a coefficient of friction between 1.27 and 1.32 when measured in accordance with MIL-D-17951. Cheesecloth referenced in the following tests is #60 cotton gauze with a thread count of 32 by 28 threads per inch.

specified force for 1 min. There shall be no movement of the cord to indicate stress on the connections.

8.20 *Tests for Toys Which Produce Noise*:

8.20.1 *Installation and Mounting Conditions*:

8.20.1.1 *General*—Carry out the measurements on a new toy not already subjected to testing. Test battery toys using new primary batteries or fully charged secondary batteries. External power supplies should not be used as they will, in many cases, affect the performance of the toy.

8.20.1.2 *Test Environment*—Any environment that meets the qualification requirements of ISO 3746, Annex A.

NOTE 9—In practice, this means that most normally furnished rooms with a volume exceeding 30 m^3 will qualify at measurement distances of 50 cm provided that the largest dimension of the toy does not exceed 50 cm.

8.20.1.3 *Mounting*—Test rigs used for the mounting of toys and/or the operator of the toy shall not affect the sound emission of the toy under test nor cause sound reflections which will increase the sound pressure levels at the measuring points.

(1) Mount close to the ear toys and hand-held toys in a proper test rig at least 100 cm above the reflecting plane or have them operated by an adult operator with the arm outstretched.

(2) Place stationary table top, floor, and crib toys on a standard test table as described in ISO 11202. A table with a wooden top with a thickness of 4 cm or larger and leg construction providing a stable test surface is considered sufficient. The table top should be large enough such that, with the toy resting on and fully over the table top, the side of the measurement box from which the measurement is being made is also above the table top (see 8.20.2.3(5)).

(3) Mount self propelled table top and floor toys on the standard test table described above in a test rig so that they can be operated with full power, but preventing them from moving around.

(4) Place pull and push toys on the reflecting plane (for example, concrete, tile, or other hard surface) and fix them in a test rig which enables them to be moved with varying speed along a direct line which passes the measuring microphones ("passing by" test). Make sure that the friction of the reflecting plane prevents wheels from skidding.

(5) Place hand-actuated wind-up toys, with the wind-up spring fully loaded, on the reflecting plane (for example, concrete, tile, or other hard surface) so that the front of the toy is 40 ± 1 cm along the *x*-axis from the microphones of the "passing by" test (see Fig. 30).

(6) Mount other types of toys in the most appropriate way using the principles described in previous paragraphs.

8.20.1.4 *Operating Conditions*—Operate the toy under test in that mode of its intended or foreseeable use that produces the highest sound pressure level to the microphone position, where the maximum noise level is observed. In particular:

(1) Operate a hand-actuated toy manually, excluding pull and push toys, by applying the force at the point and direction of its intended or foreseeable use giving the maximum sound pressure level. For a toy intended to be shaken, shake at a rate of three times per second. One cycle shall consist of an initial 15 cm stroke followed by a return to the starting point.

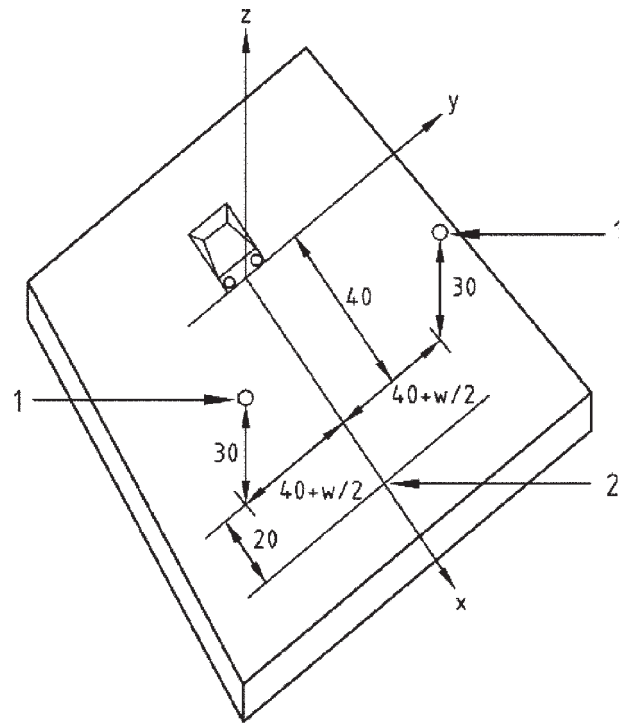

NOTE—
Key:
1—Microphone
2—End of measurement
w—width of toy

FIG. 30 Microphone Positions for Measurements of Pull and Push Toys and for Hand-Actuated Spring-Propelled Toys ("Pass-by" Test)

(2) Operate a rattle by grasping it where it is meant to be held or, if in doubt, where the longest lever between the hand and the sound emitting part of the rattle can be obtained. Make sure that the radiated sound is not affected by the grip of the hand. Strike downwards ten times with hard lashes in a slow tempo. Use the wrist and keep the forearm essentially horizontal. Endeavour to achieve the highest possible sound level. Stand side-face with the microphone and keep the rattle at the same height as the microphone at a distance of 50 cm.

(3) Operate a pull and push toy at a speed that yields the maximum sound pressure level. Do not exceed 2 m/s.

(4) Operate a cap-firing toy using percussion caps recommended by the manufacturer and which are available on the market.

8.20.2 *Measurement Procedure*:

8.20.2.1 *Basic International Standards to be Used*—The minimum requirement is to determine sound pressure levels at the specified positions around the toy in accordance with ISO 11202 or ISO 11204.

8.20.2.2 *Instrumentation*—The instrumentation system, including the microphone and cable, shall meet the requirements of a class 1 or class 2 instrument specified in IEC 61672-1 and IEC 61672-2. When measuring high peak sound pressure levels, for example, from toys using percussion caps, the

microphone and the entire instrumentation system shall have the capability of handling linear peak levels exceeding the C-weighted peak levels by at least 10 dB.

8.20.2.3 *Microphone Positions—General*—Several microphone positions shall be used. In practice, this often means that one microphone is moved from position to position. Whenever it is practicable, it is always an alternative to rotate the test object instead. Attention must be paid to maintaining the correct measuring distance.

(1) Close-to-the-Ear Toys—To measure continuous sounds, face the earpiece of the toy at the microphone with the microphone 50 ± 0.5 cm from the earpiece. To measure continuous sounds on toys without earpieces, locate the microphone 50 ± 0.5 cm from the surface of the toy where the main sound source exists such that the sound pressure level at the microphone is maximized. To measure impulsive sounds, locate the microphone 50 ± 0.5 cm from the surface of the toy where the main sound source exists such that the sound pressure level at the microphone is maximized.

(2) Cap-Firing Toys—Use six microphone positions around the toy. Place the main sound emitting part of the toy at the origin of the measuring coordinate system in its normal operating orientation in such a way that the main axes of the toy coincide with the axes of the measuring coordinate system (see Fig. 31). If the length of the toy exceeds 50 cm, rotate the toy in the *xy*-plane 45° around the *z*-axis without changing the microphone positions. Select two microphone positions along each axis at a distance of 50 ± 1 cm to both directions from the origin as shown in Fig. 31.

(3) Rattles—Mount the microphone 1.2 m above the floor and at a distance of 0.5 m from the sound source.

(4) Other Hand-Held Toys—Select six microphone positions on a box-shaped measurement surface at the measuring distance of 50 cm from the reference box of the toy, as defined in ISO 3746, as specified in Fig. 32. The positions are at the centers of the sides of the measurement surface at the distance 50 cm from the reference box.

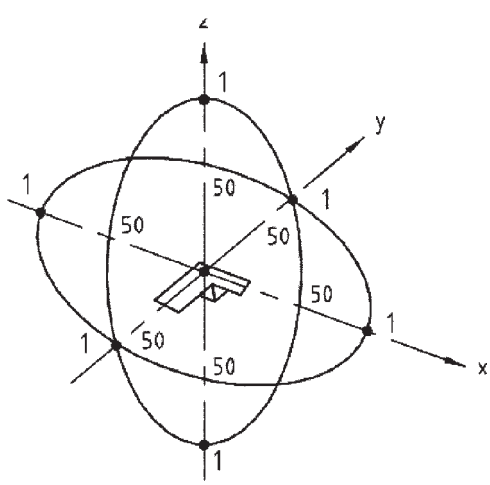

NOTE—
Key:
1—Microphone

FIG. 31 Microphone Positions for Measurement of Sound Pressure Levels of Cap Firing Toys

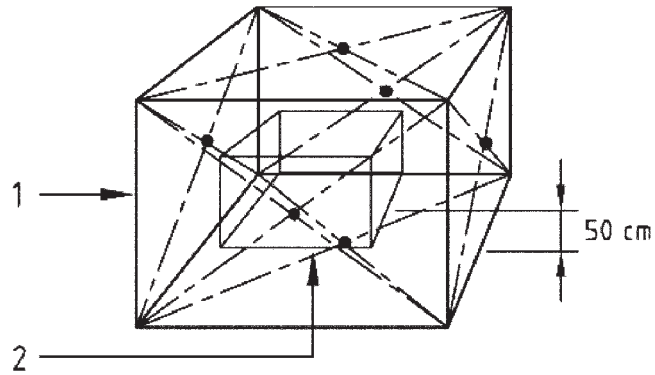

NOTE—
Key:
1—Measurement box
2—Reference box

FIG. 32 Microphone Positions for All Other Hand-Held Toys

(5) Stationary and Self-Propelled Table-Top, Floor, and Crib Toys—Select five, or if the length or width of the toy is larger than 100 cm, nine microphone positions on a box-shaped measurement surface at the measuring distance of 50 cm from the reference box of the toy as specified in Fig. 33. The sides of the measurement box with height *H* are always 50 cm from the sides of the reference box, except for the bottom of the boxes, which lie in the same plane. All microphone positions are on the measurement box.

(6) Pull and Push Toys and Hand-Activated Spring-Propelled Toys—For toys with a width (*w*) of 25 cm or less, use two microphones at distances (*d*) 50 cm from the *x*-axis of the measuring coordinate system as shown in Fig. 30. For toys with a width (*w*) of more than 25 cm, use two microphone at distances (*d*) 40 cm plus half the width of the toy from the *x*-axis (40 + *w*/2) as shown in Fig. 30. Place the toy on a test rig or on the reflecting plane in its normal operating orientation in such a way that movement of the toy is possible along the *x*-axis passing the microphone positions.

8.20.2.4 *Measurements*:

(1) General—Normal operating mode(s) shall be reached before the tests are performed.

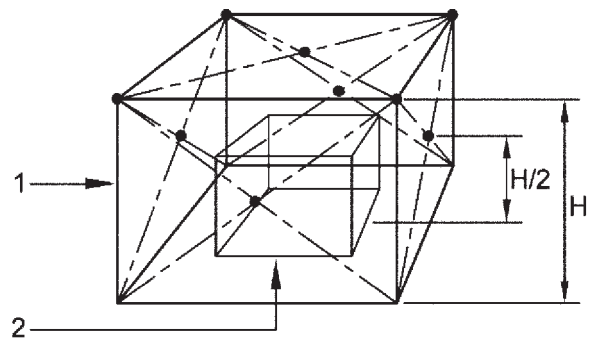

NOTE—
Key:
1—Measurement box
2—Reference box

FIG. 33 Microphone Positions for Measurement of Stationary and Self-Propelled Table-Top, Floor, and Crib Toys

(2) Measurements of Continuous Sounds—If the toy under test has a clearly defined operating cycle, measure the equivalent sound pressure level in each microphone position during at least one whole cycle. Quiet periods longer than 15 s shall be excluded from the measurement period. Perform a total of three measurements. If the toy under test does not have a clearly defined operating cycle, measure the equivalent sound pressure level in each microphone position for at least 15 s during the operational mode where the noise level is highest. Perform a total of three measurements. For pass-by tests, measure the maximum A-weighted sound pressure level. Measure twice on each side.

(3) Measurements of Impulsive Sounds—Measure the C-weighted peak sound pressure level, L_{Cpeak}, of impulsive sounds in each microphone position. Perform a total of three measurements.

(4) Measurement for Rattles— Measure the C-weighted peak sound pressure level, L_{Cpeak}, for ten cycles. Perform a total of three measurements.

(5) Measurement Results—Sound measurement results shall be given as: (*1*) A-weighted equivalent sound pressure level at the specified position, L_{Aeq}, in decibels; (*2*) A-weighted maximum sound pressure level at the specified position, L_{Amax}, (pass-by tests), in decibels; (*3*) C-weighted peak sound pressure level at the specified position, L_{Cpeak}, in decibels.

(6) The highest value of the applicable measurements (L_{Aeq}, L_{Amax}, and L_{Cpeak}) at any of the microphone positions is the measurement result.

8.21 *Dynamic Strength Test for Wheeled Ride-on Toys*—Load the toy for 5 min in the most onerous position with the appropriate mass in accordance with Table 3 on its standing or sitting surface. Secure the load to the toy in a position corresponding to the normal use of the toy. Drive the toy three times at a speed of 6.6 ft/s (2 m/s) ± 0.7 ft/s (0.2 m/s) into a nonresilient step with a height of 2 in. (50 mm). If the toy is intended to bear the mass of more than one child at a time, test each sitting or standing area simultaneously. Determine whether the toy continues to conform to the relevant requirements of this specification.

8.22 *Packaging Film Thickness*—Use a measuring device (dial-type thickness gage or equivalent) capable of measuring thickness to an accuracy of 4 µm. Measurements shall be taken at 10 equidistant points across the diagonal of any 3.94 by 3.94-in. (100 by 100-mm) area. The average thickness of the ten measurements shall not be less than 0.00150 in. (0.03810 mm) and none of the measurements shall be below the 0.00125-in. (0.03175-mm) minimum thickness. For plastic bags, prepare by cutting the sides, without stretching, into two single sheets.

8.23 *Test for Loops and Cords*—

8.23.1 Anchor or secure the toy. Place the head probe (Fig. 11) in the loop/opening formed by the cord/s, tapered end first, with the plane of its base parallel to the plane of the opening. Rotate the probe to any orientation about its own axis while keeping its base parallel to the plane of the opening; apply 10 lbf (45 N) while attempting to push the probe through the opening.

8.23.2 Elastic materials or loops that are smaller than the tapered diameter of the head probe shall be stretched before applying the head probe test fixture using the hook test fixture illustrated in Fig. 34. To begin the evaluation, the elastic material is first looped around the left bottom hook, then hooking the elastic material with the hook attachment of the force gauge, pull the elastic material to the right bottom hook without exceeding a force of 5.0 lbf (22.2 N). The elastic material is then pulled to the left upper hook without exceeding a force of 5.0 lbf (22.2 N). Pull the elastic material to the right side so that the hook of the force gauge is adjacent to the left upper hook and parallel to the right bottom hook without exceeding a force of 5.0 lbf (22.2 N). The hook of the force gauge should remain in this position during testing. If the elastic material cannot be stretched and held in this position or if the force needed to stretch the elastic material exceeds 5.0 lbf (22.2 N), the elastic material complies with this requirement. The testing sequence is illustrated in Fig. 34 (a) through (e). If the body of the toy forms part of the loop, position the body of the toy so that it is on the open, right-hand side of the hook test fixture. Apply the head probe in accordance with 8.23.1.

8.23.3 For cords, straps, and elastics that form loops and have a perimeter larger than the base diameter of the head probe and contain a breakaway feature, the following test is applied to determine release force. With the cord secured in a vertical fashion so that the breakaway feature is essentially in the center of the two clamping devices, apply a downward force and determine if the breakaway feature releases at a force less than 5.0 lbf (22.2 N).

8.24 *Yo Yo Elastic Tether Toy Test Methods*:

8.24.1 Hold yo yo elastic tether toy by whatever holding device is supplied, typically a small loop. Rotate the product in a horizontal plane using any convenient means to achieve a constant rotational speed. A variable speed drill is one method of achieving 80 r/min. Rotation of the product is to start slowly and gradually increase to 80 r/min (over a period of approximately 10 to 60 s). If air resistance properties of product are such that it cannot be rotated at 80 r/min, testing shall be performed at maximum achievable speed.

8.24.2 Measure the length of the tether when the tether is fully extended during rotation. The tether length does not include the mass at the end, or the holding means (the loop).

8.25 *Magnetic Flux Index*:

8.25.1 *Flux Density Measurement.*:

8.25.1.1 *Test Equipment*—dc field gauss meter with a resolution of 5 gauss (G) and an axial type probe.

(1) An active area diameter of 0.76 ± 0.13 mm.

(2) A distance between the active area and probe tip of 0.38 ± 0.13 mm.

8.25.1.2 *Test Method*:

(1) Place the probe's tip in contact with the pole surface of the magnet. For a magnetic component (where the magnet is fully or partially imbedded in part of the toy), place the probe's tip in contact with the surface of the component.

(2) Keep the gauss meter's probe perpendicular to the surface.

(3) Move the probe across the surface to locate the maximum absolute flux density.

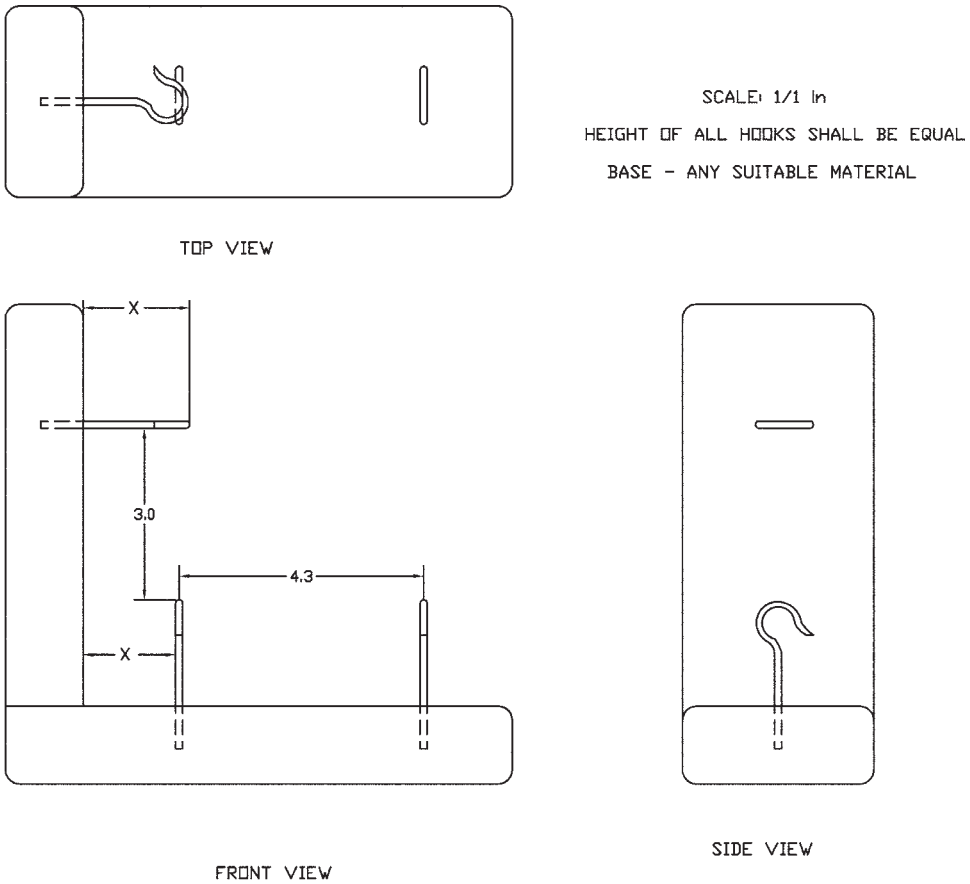

FIG. 34 Hook Test Fixture for Cords and Loops

(4) Record the maximum absolute flux density measurement.

8.25.2 *Area Measurement of the Pole Surface*:

8.25.2.1 *Test Equipment*—Calipers or similar device with a resolution of 0.1 mm.

8.25.2.2 *Test Method*—If the magnet is imbedded/attached as part of a magnetic component, extract the magnet from the component. If the pole surface of the magnet is flat, calculate the area using the appropriate geometric formula. If the pole is not flat (for example, hemispherical), the pole surface area is the maximum cross section of the magnet perpendicular to an axis through the magnet poles (see Fig. 35).

NOTE 10—On multi-pole magnets use the area of the largest single pole, which can be determined using magnetic field viewing film or equivalent.

8.25.3 *Calculation*—The flux index (kG^2 mm^2) is calculated by multiplying the area of the pole surface (mm^2) of the magnet by the square of the maximum flux density (kG^2).

9. Identification

9.1 So that purchasers may identify products conforming to all of the requirements of this specification on toy safety, producers, importers, and distributors may include a statement of compliance in conjunction with their name and address on product labels, invoices, and sales literature.

9.1.1 The following statements are suggested:

(1) Conforms to the requirements of ASTM Standard Consumer Safety Specification on Toy Safety, F 963 (name and address of producer, importer, or distributor).

(2) Conforms to the safety requirements of Specification F 963 (name and address of producer, importer, or distributor).

10. Keywords

battery-operated toys; children; safety labeling; safety testing; toy safety requirements

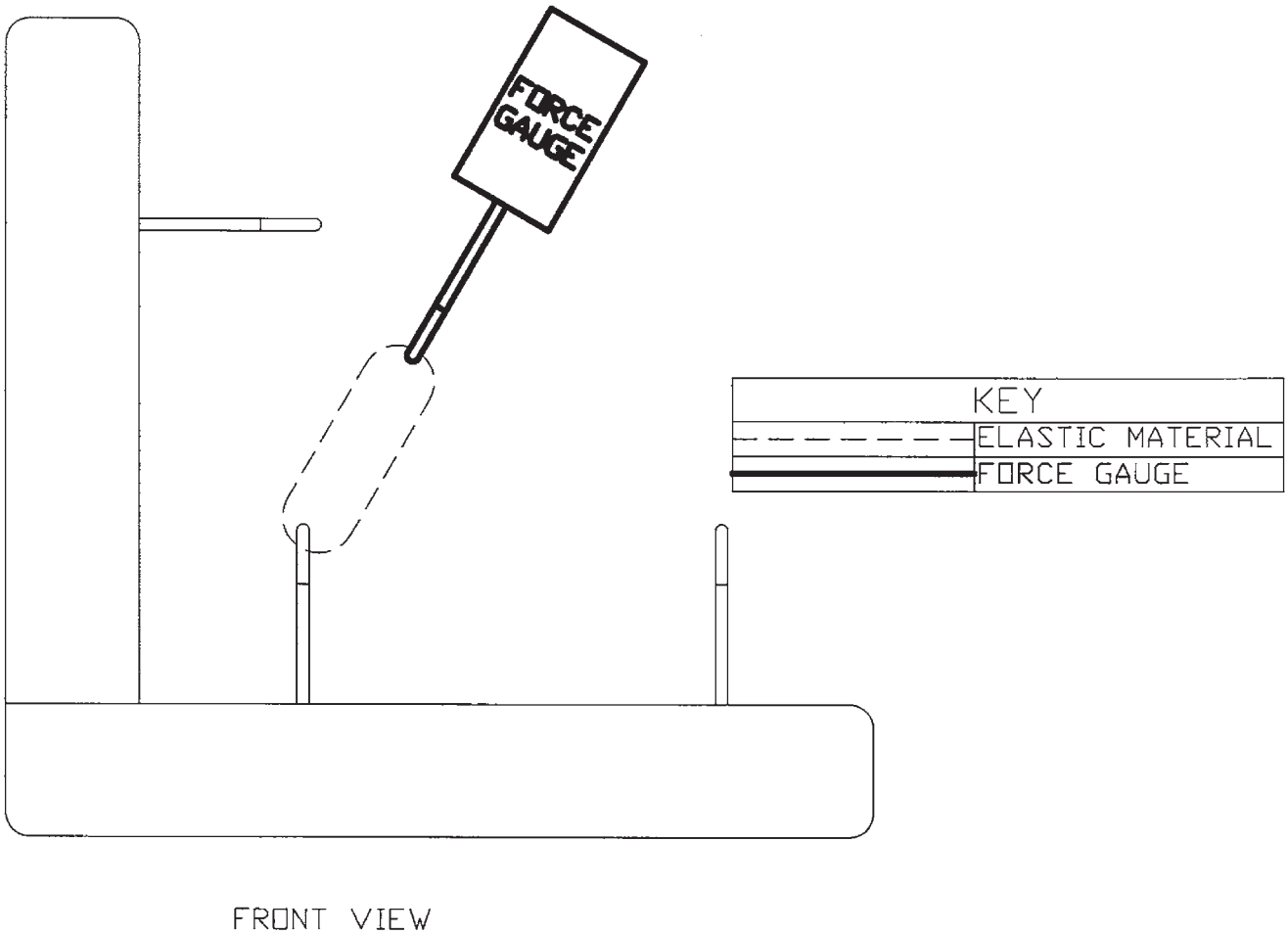

FIG. 34 (a) Test Procedure for Cords and Loops, Step 1 *(continued)*

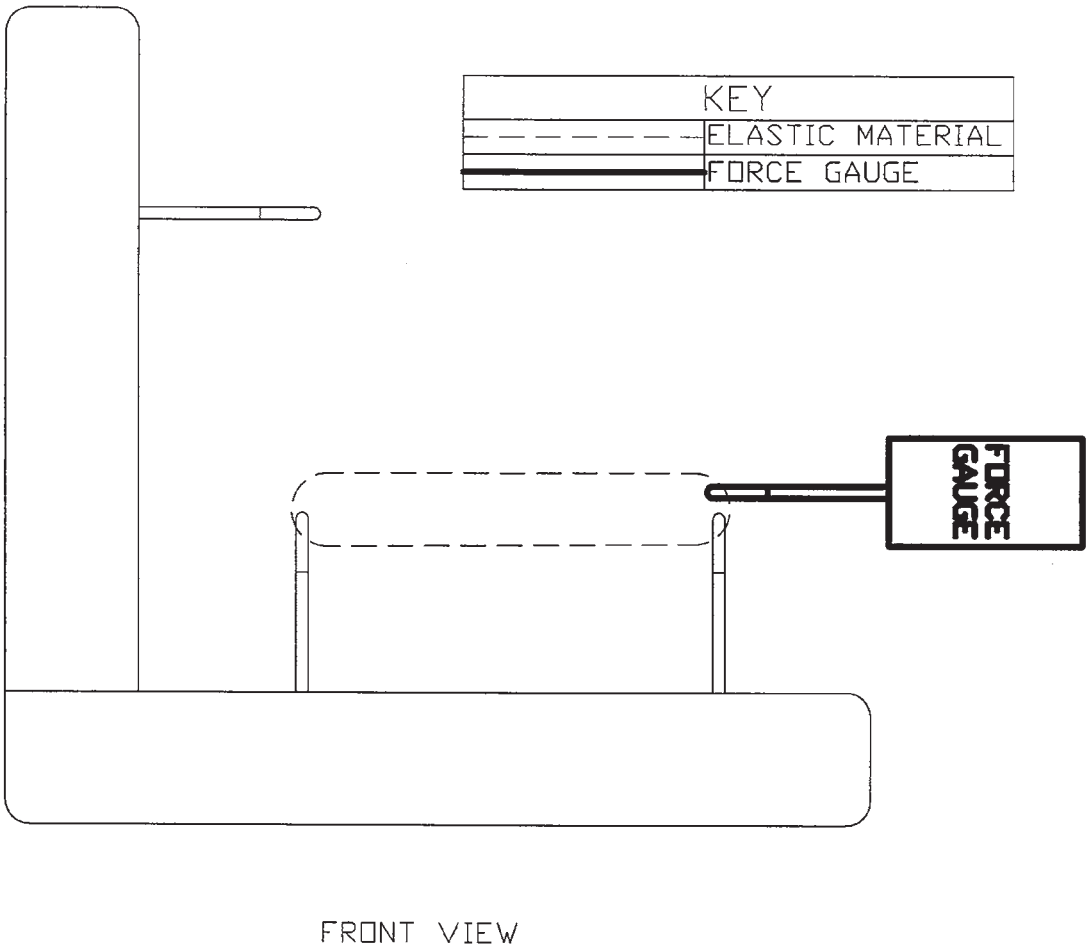

FIG. 34 (b) Test Procedure for Cords and Loops, Step 2 *(continued)*

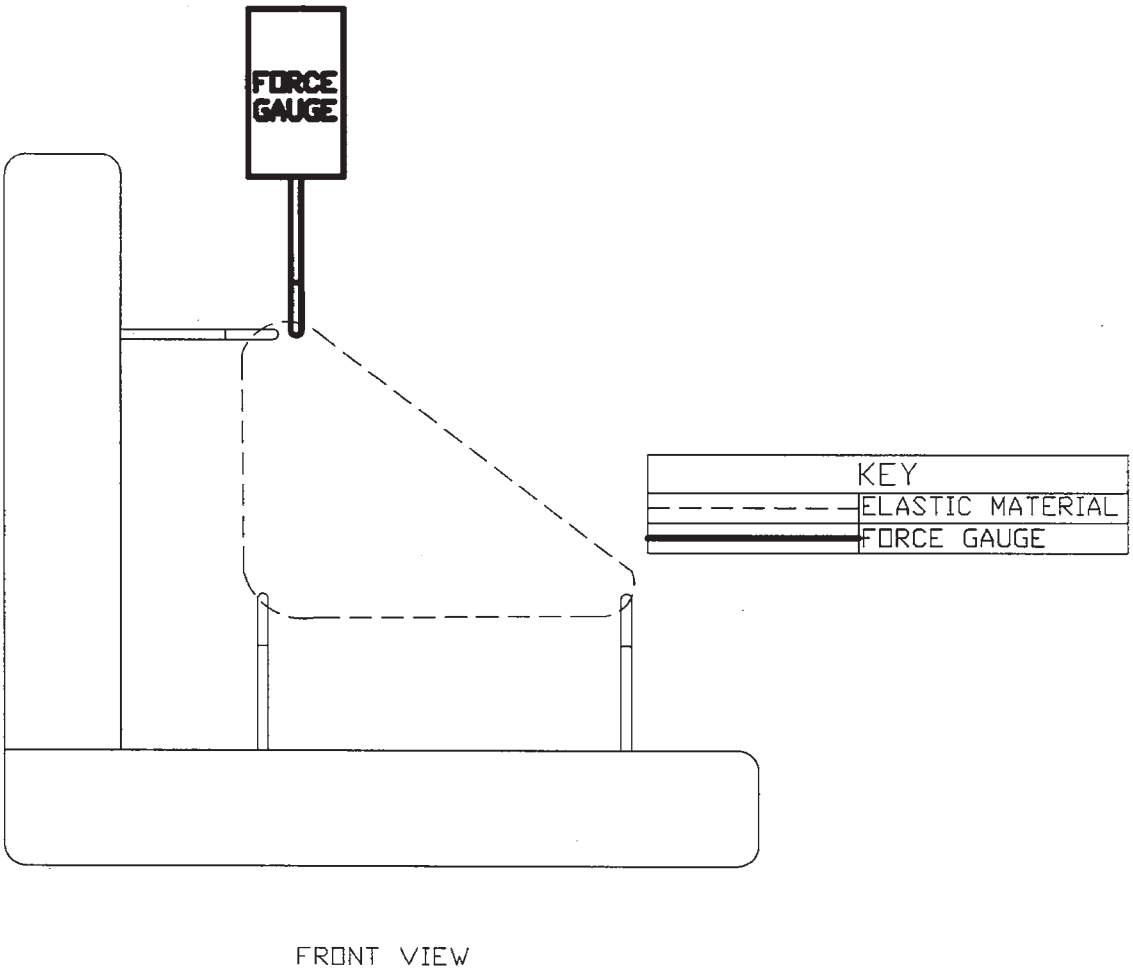

FIG. 34 (c) Test Procedure for Cords and Loops, Step 3 *(continued)*

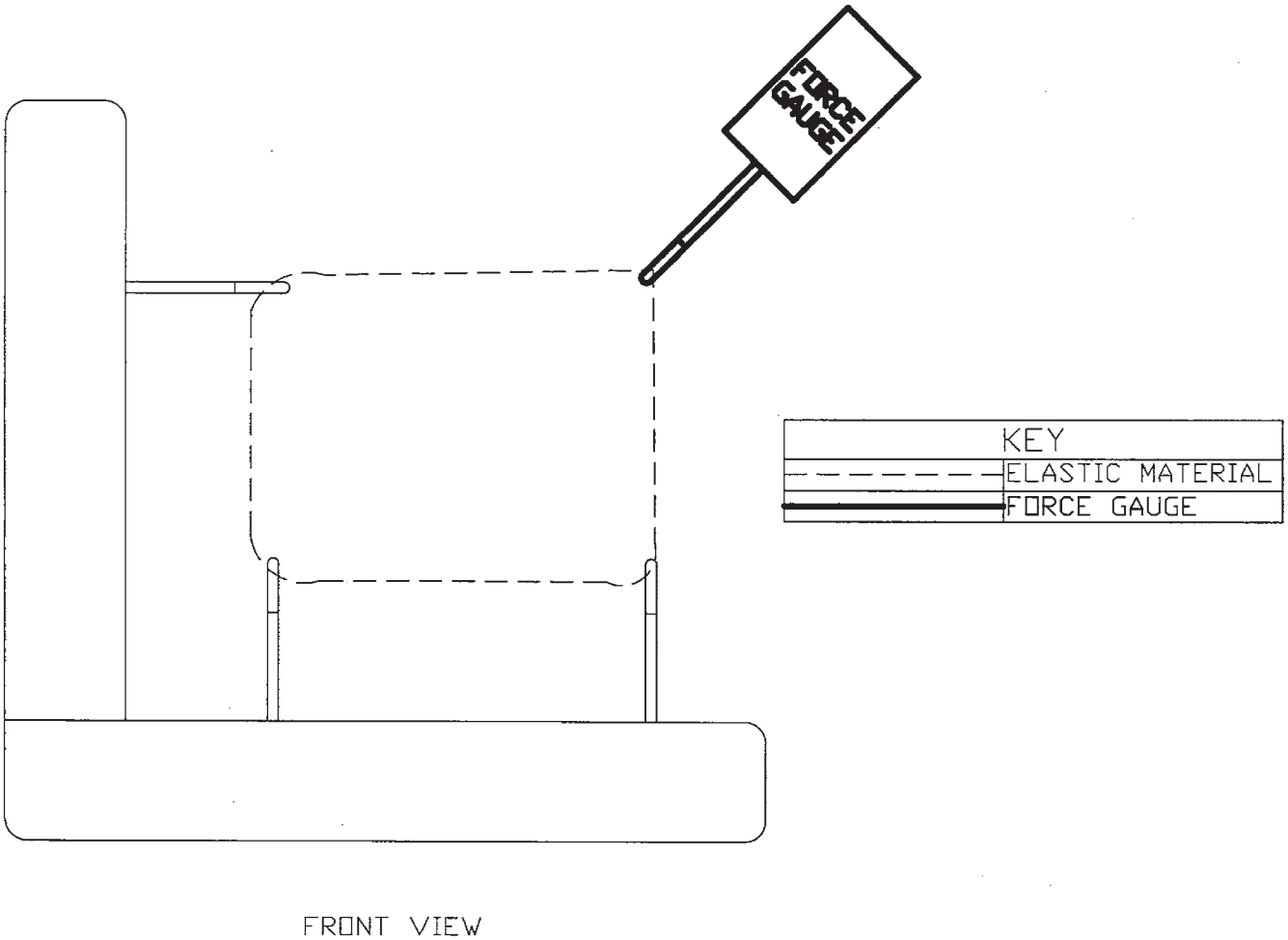

FIG. 34 (d) Test Procedure for Cords and Loops, Step 4 *(continued)*

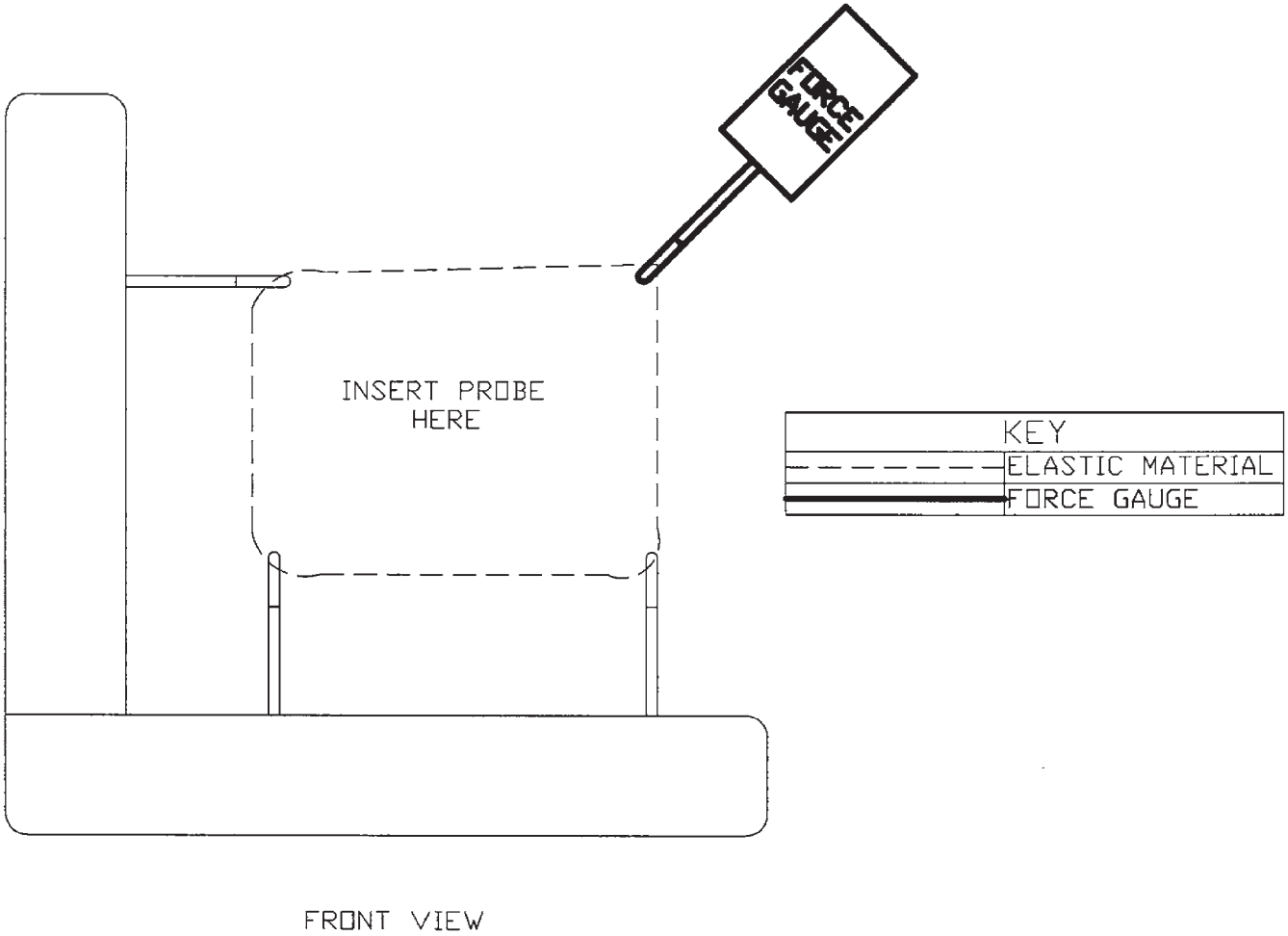

FIG. 34 (e) Test Procedure for Cords and Loops, Step 5 *(continued)*

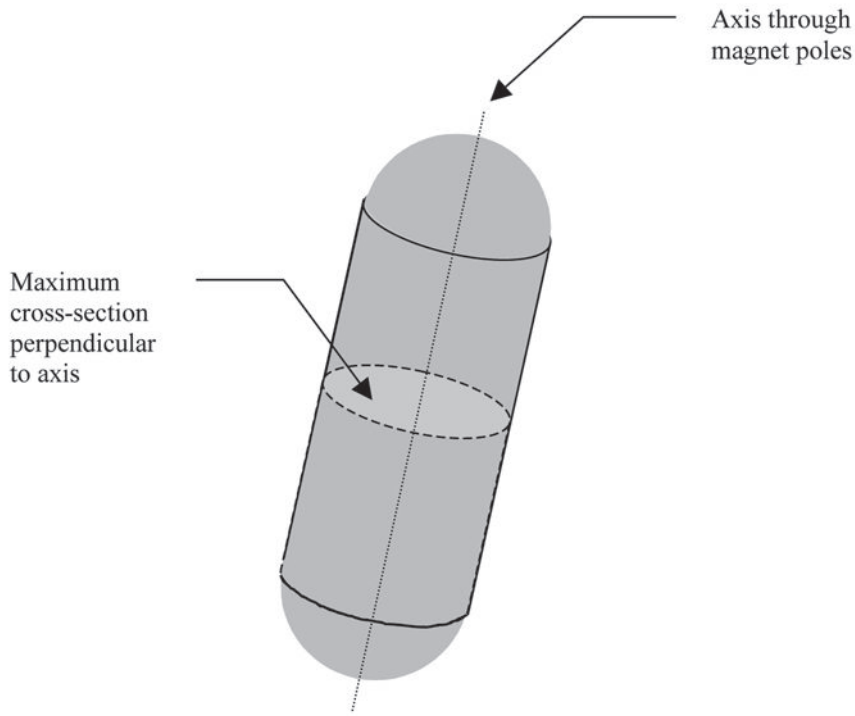

FIG. 35 Illustration of Pole Surface on a Magnet with Rounded Ends

ANNEXES

(Mandatory Information)

A1. AGE GRADING GUIDELINES +

A1.1 Purpose and Scope

A1.1.1 Good age-grading practices are important to ensure that a toy is appropriate and safe at particular stages of physical and mental development.

A1.1.2 Age labeling is intended to provide point-of-sale guidance to consumers for the selection of appropriate toys for children with respect to average abilities, interests of various age groups, and safety aspects of the toys themselves.

A1.1.3 This guideline is intended to provide thoughts and considerations necessary to establish meaningful age recommendations for toy products.

A1.1.4 "Guidelines for Relating Children's Ages to Toy Characteristics (1985)" is available from the Consumer Product Safety Commission, Washington, DC 20207.

A1.2 Criteria for Establishing Age Grades

A1.2.1 The following criteria should be considered when establishing age grading for a toy. While all of these should be considered in total, each one may be weighted individually to arrive at the appropriate age grading.

A1.2.1.1 The physical ability of a child to manipulate and play with the specific features of a toy. This necessitates an understanding of the physical coordination, fine and gross motor capabilities, size, and strength generally available at a given age.

A1.2.1.2 The mental ability of a child to understand how to use the toy (that is, understand instructions, sequences of operations, objective of the toy). Consideration of the mental skills at a given age is important in order to provide a concept that will challenge abilities and stimulate further development, yet not frustrate. Accomplishment should be neither too easy nor too difficult to be satisfying to the child.

A1.2.1.3 The toy must meet play needs and interests at different levels of development. Understanding developmental levels and identifying play materials and play environments to enhance each developmental stage is important for assigning appropriate age grades. Play interests and toy preferences change rapidly; there should be careful attention to a child's preference or aversion to specific toy subjects at certain stages. In order for a toy to enhance play, it obviously must be appealing to its user. In short, it must be fun.

A1.3 Tools

A1.3.1 Use of the following tools can help guide the establishment of meaningful age grading for a toy. These tools are not arranged in a particular order of importance; all of them should be considered during the age grading process.

A1.3.1.1 Prior experience with the toy or a similar toy in the marketplace indicating suitability for a specific age group.

A1.3.1.2 Reference materials on comparative body measurements and human factors elements.

A1.3.1.3 Reference resources on child development norms to establish developmental mileposts.

A1.3.1.4 Identification of developmental features to be enhanced/stimulated within certain age spans.

A1.3.1.5 Expertise of outside consultants, child development specialists, physicians, and psychologists.

A1.3.1.6 Testing of models or prototypes with children.

A1.3.1.7 Observing skill levels in children at play.

A1.3.1.8 Seeking opinions of parents.

A1.3.1.9 Interacting with children and asking questions.

A1.4 Safety Considerations of Age Grading

A1.4.1 The toy must be safe for the intended user. Once the skill level has been determined, the design must be tailored to satisfy the requirements of this specification associated with that age level.

A1.4.2 Age grades are indicators of average development, which does not necessarily reflect suitability for the exceptional child. A parent remains the best judge of whether the child is at the appropriate development stage for safe play with a particular toy.

A1.4.3 A primary consideration should be potential choking and aspiration hazards associated with small parts. Children under the age of three are more prone to placing objects in their mouths. However, the propensity to put nonfood objects in the mouth does not disappear at the chronological age of three years. The following toys are appropriate for children under three years of age and are cited specifically as subject to the safety requirements of 16 CFR 1501 for small parts regulations:

A1.4.3.1 Squeeze toys, teethers, crib exercisers, crib gyms, crib mobiles, toys intended to be affixed to a crib, stroller, playpen, or baby carriage, pull and push toys, pounding toys, blocks and stacking sets, bathtub, wading pool and sand toys, rocking, spring, and stick horses and other figures, chime and musical balls and carousels, jack-in-the-boxes, stuffed, plush, and flocked animals and other figures, and those preschool toys, games and puzzles, riding toys, dolls and animal figures, cars, trucks, and other vehicles that are intended for use by children under the age of three years.

A1.4.4 Some of the characteristics of toys that describe those preschool toys that are appropriate for children under the age of three years are listed below by class of toy:

A1.4.4.1 *Dolls*—Soft-bodied baby dolls or character dolls that are for holding or cuddling, stuffed or "bean bag" dolls, rag or cloth dolls with simple features (including accessories), and lightweight plastic dolls with simple features and limited articulation at the limb joints.

A1.4.4.2 *Infant Toys*—Toys intended to be used in a crib or playpen, to be held easily by small hands, shaken, grasped, rattled, or cuddled.

A1.4.4.3 *Toy Vehicles*—Cars, trucks, boats, and trains of simple chunky shape, decorated in primary colors without extensive descriptive detail or representation of a particular make or model of vehicle and that require simple actions such as rolling, dumping, pushing, and releasing.

A1.4.4.4 *Action Toys*—Simple action toys for the identification of sounds or pictures and surprise action toys.

A1.4.4.5 *Early Learning Toys*—Toys, books, and puzzles for learning basics such as letters or numbers or shapes, and simple physical motions such as turning wheels or knobs, pulling and letting go, or sorting by size, etc.

A1.4.4.6 *Blocks and Stacking Toys*—Toys that do not require finger dexterity or fitting together of small intricate pieces.

A1.4.4.7 *Soft Balls and Similar Items*—Soft, lightweight balls or other shapes for squeezing, shaking, rolling, or tossing.

A1.4.5 Toys that should not be considered appropriate for very young children, and therefore not be age labeled as such, have the following characteristics:

A1.4.5.1 Toys that require intricate finger movements or controlled adjustments, fitting intricate pieces together.

A1.4.5.2 Toys, for example, games that require or incorporate elements of reading ability beyond the ABCs or 123s.

A1.4.5.3 Toys that simulate adult figures or characters and their associated accessories.

A1.4.5.4 Collecting sets (for example, figures and vehicles).

A1.4.5.5 Projectile-type toys, launched vehicles, planes, etc.

A1.4.5.6 Makeup sets.

A1.4.6 Another major development cutoff has been cited at approximately eight years of age, at which time reading ability has progressed so that a child can, on his own, read, understand, and heed instructions, caution statements, etc. Because the instructions and caution statements are necessary for the safe use of the product in some cases, those products should be labeled for use by children over the age of eight. Products that fall into this category include the following:

A1.4.6.1 Science and environmental kits or sets containing breakable glass components and complex instructions.

A1.4.6.2 Complex model and craft sets requiring precision assembly and finger dexterity or incorporating sharp tools or components.

A1.4.6.3 Electrically operated toys incorporating heating elements.

A1.4.6.4 Certain chemistry sets, fueled model vehicles, and rockets, etc. that contain chemicals that may be hazardous, cannot generally be handled safely by children unable to read and understand instructions and cautionary statements. The minimum age for which any such product should be recommended is eight years and then *only* with adult supervision.

A1.5 Descriptive Age Labeling

A1.5.1 Manufacturers can assist parents and other purchasers in the appropriate selection of toys by incorporating descriptive labeling to identify potential safety concerns if the toy is accessible to children outside the recommended age group.

A1.5.2 For example, if a toy contains small play pieces and is labeled for older children, such as an action figure set, the manufacturer should consider including a statement on the retail packaging that the toy contains small pieces.

A1.5.3 Factors to consider would include the appeal of the toy to young children, market experience, the design or construction of the toy, and whether the packaging provides visual indication of any small play pieces. In addition, a manufacturer should consider the probability that a purchaser may overestimate a child's physical or mental abilities and the child's understanding of a potential hazard related to the toy.

A2. PACKAGING AND SHIPPING

A2.1 Packaging

A2.1.1 Packages that are intended to be opened by adult purchasers should be constructed as to avoid hazards during the opening process from metal fasteners, particularly staples, and should not contain common pins used to position the toy within the package.

A2.2 Shipping

A2.2.1 Packaged and unpackaged toys can be subjected to a wide variety of tests designed to test the ability of toys to withstand the destructive forces encountered in the distribution cycle. The tests used most widely include drop, vibration, compression, and incline impact. Limited testing may be sufficient for many toys, especially those that are of light weight and constructed of resilient materials, such as dolls and stuffed toys. Others, however, such as large plastic or heavy metal toys, may be damaged during shipment and should be subjected to appropriate tests. Guidance for useful tests can be obtained from the following ASTM sources: Test Methods D 642, D 5276, D 880, and D 999.

A3. DESIGN GUIDELINES FOR TOYS ATTACHED TO CRIBS OR PLAYPENS

A3.1 Purpose and Scope

A3.1.1 This annex provides guidance for design practices intended to encourage the careful examination of product characteristics and configurations with respect to safety. As there are no objective means for determining conformance with these design guidelines, they are not to be used to judge compliance with this specification.

A3.2 Guidelines

A3.2.1 Designs for all products intended to be attached to cribs or playpens should be accomplished in a manner that minimizes the potential for strings, ribbons, elastic, or parts of clothing to become caught on the product, such that an infant is placed in a dangerous predicament in which possible strangulation could occur.

A3.2.2 Examples of the implementation of good design practices for crib and playpen environments include the following:

(1) Rounded corners with the use of generous radii wherever possible.

(2) Smooth contours that minimize abrupt changes in shape that could easily become a catch point for strings, ribbons, elastic, or loose clothing.

(3) Isolation of fastening hardware using recesses, counterbores, or other similar methods.

(4) Reduction of the potential for any mismatch of surfaces where a catch point could develop.

A4. FLAMMABILITY TESTING PROCEDURE FOR TOYS

A4.1 Purpose

A4.1.1 This annex establishes the protocol and general criteria for flammability testing in conformance with the requirements of 16 CFR 1500.44.

A4.2 Definitions

A4.2.1 *major axis*—a straight line through the longest dimension of the product connecting the most distant parts or ends of the product. A product can have more than one major axis (see Fig. A4.1), but they must be equal in length.

A4.2.2 *soft toy*—any stuffed or plush toy, including soft animals or dolls, that may be parts or components of other toys.

A4.2.3 *solids*—toys or toy parts constructed of rigid, flexible, or pliable solids.

A4.3 Exemptions

A4.3.1 Strings, paper, packaging materials, and ping-pong balls.

A4.3.2 Accessible components having a major dimension of 1 in. (25 mm) or less.

A4.3.3 Unstuffed textile fabrics and removable unstuffed toy clothing shall be tested separately and shall meet the requirements of 16 CFR 1610. When sold as part of a toy such that the clothing is not intended to be removed, the clothing shall become subject to the test to the extent that it becomes a part of the major axis.

A4.4 Sample Preparation

A4.4.1 When testing rigid or pliable solids and soft toys, a minimum of four test specimens is most desirable. However, in

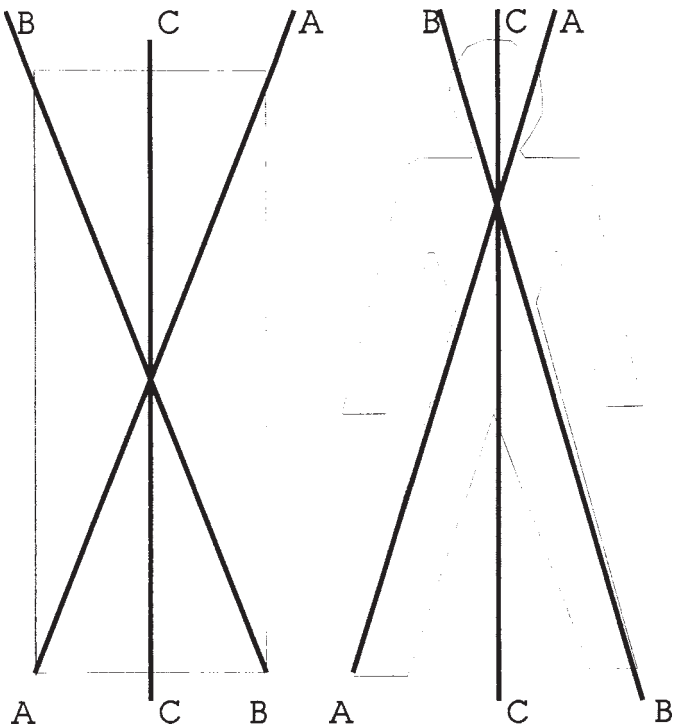

NOTE 1—Lines A-A and B-B are both major axes. Line C-C is *not* a major axis.

FIG. A4.1 Illustration for Determining Major Axis

cases in which it is impractical to acquire the minimum of four test specimens, a preliminary determination may be made based on as few as one sample.

A4.4.2 Samples shall consist of assembled product as intended to be received by the customer. If adult assembly is required, testing shall be performed after all such assembly has taken place. All clothing and accessory items intended to be attached permanently shall be affixed to the sample as intended by the manufacturer.

A4.4.3 If the product has removable clothing, the clothing shall be removed and tested separately (see A4.3.3).

A4.5 Procedure

A4.5.1 Place the prepared sample in a draft-free area that can be ventilated and cleared after each test. The temperature of the sample at the time of testing shall be between 68 and 86°F (20 and 30°C) at a relative humidity of 20 to 70 %.

A4.5.2 The test fixture shall be corrected to a clean condition prior to the start of each test.

A4.5.3 Measure the dimensions of the sample, and support it by means of the test fixture (see Fig. A4.2) or equivalent, so that the major axis is oriented horizontally. Placing a scale along the major axis is a sufficient means for gaging the burn distance.

A4.5.3.1 *Orientation and Locations for Ignition of Specimens*—When orienting specimens, provide support over the entire length of the major axis without sagging, making sure the supporting device does not retard the spread of flame materially. Optional: for samples with long hair, it may be necessary to add fine wire (24 AWG or higher) between some nails to provide sufficient support for laying the hair out flat. The addition of support for hair is not necessary unless the hair exceeds shoulder length.

NOTE A4.1—The CPSC does not test hair separately but rather tests hair as a normal part of the toy. The toy might be tested in a face-down position, with the hair in a horizontal position on top of the toy. The toy could also be tested lying on its back, with the hair lying beneath the toy. Hair that hangs vertically would not be used to calculate the burn rate.

A4.5.3.1.1 A sample that is so large that it becomes impractical to support its entire length must be arranged in such a manner that support at the end of a major axis is provided by the test fixture.

A4.5.3.1.2 One or more specimens shall be ignited at one end of the major axis, and, when practical, one or more specimens shall be ignited at the opposite end of the major axis. Specimens shall be positioned in the worst case position, as dictated by experience.

A4.5.4 Hold a burning paraffin candle whose diameter is at least 1 in. (25 mm) so that the flame is a minimum of ⅝ in. (16 mm) high, with the tip of the inner cone of the flame in contact with the surface of the sample at the end of the major axis for 5 s. Maintain contact of the candle with the sample for 5 s or until ignition occurs. If the sample melts away from the flame, move the candle and maintain contact for the full 5 s or until the sample ignites. If the ignition occurs immediately, hold the candle steady and allow the ignited flame to move away.

A4.5.4.1 Trim the candle and wick as necessary to maintain a flame height of ⅝ to 1 in. (16 to 25 mm).

A4.5.5 Remove the candle. Determine the time of combustion by means of a stop watch. Do not allow the test time to exceed 60 s with a self-sustaining flame.

A4.5.6 Extinguish the flame with a CO_2 or similar nondestructive extinguisher, if necessary, after 60 s. The experienced application of water is an acceptable method for extinguishing the flame.

NOTE A4.2—Extinguishing the flame must be accomplished in a manner that preserves the accuracy of the burned distance.

A4.5.7 Measure the length of the burned area, and calculate the rate of burning along the major axis of the sample.

A4.5.8 Products that do not ignite are considered acceptable. No burn rate is calculated for these samples. The burn rate for products that self-extinguish in less than 60 s shall be computed by using the actual burning time as the denominator when calculating the burn rate. For example, ignited product burns 3 in. (76 mm) in 20 s and self-extinguishes. The burn rate is calculated as follows:

$$\frac{3\text{ in.}}{20\text{ s}} = 0.15\text{ in./s} \tag{A4.1}$$

A4.5.8.1 Burn-rate calculations for a product that self-extinguishes must be approached cautiously to avoid the introduction of measurement error since small measurement errors can become a significant portion of final calculations when the burn distance is short.

NOTE A4.3—It is unlikely that the CPSC would pursue an enforcement action that includes a burn rate calculation higher than 0.10 in. per s and yet consistently self-extinguishes during the test. However, the CPSC

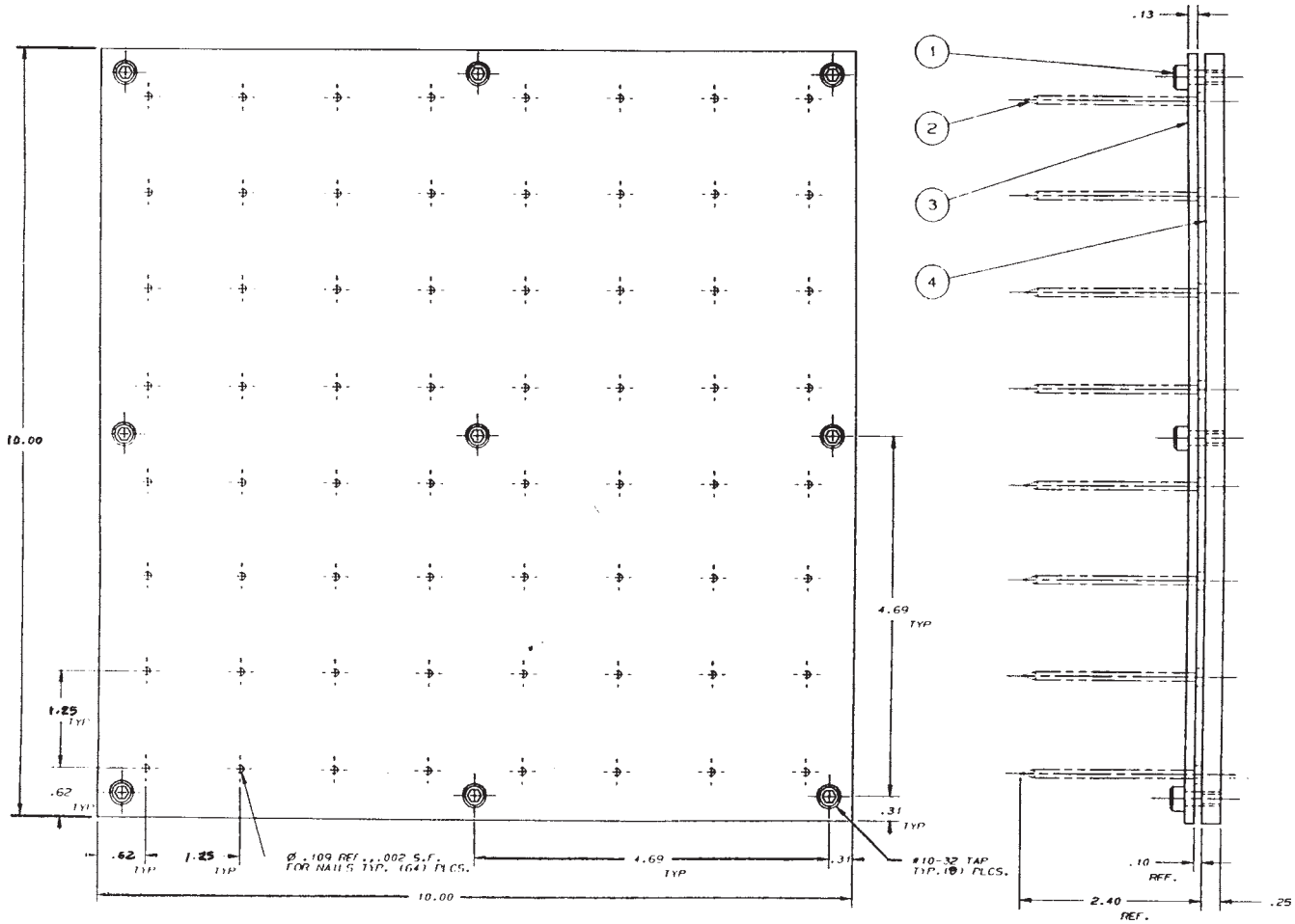

Item	Required	Description	Material
1	9	# 10–32 × 0.38 LG.	S.H.C.S.
2	64	# 8d × 2.50 LG.	Common Nail
3	1	0.12 × 10.12 × 10.12 LG.	Stainless Steel
4	1	0.25 × 10.00 × 10.06 LG.	Stainless Steel

NOTE 1—Tolerances (unless otherwise specified):
3 Place DIMS ± 0.005
2 Place DIMS ± 0.015
Angles ± 1°

NOTE 2—Break all sharp edges, stamp tool name and number on all components, and screw to suit unless otherwise specified.

FIG. A4.2 Suggested Flammability Test Fixture

reserves the right to proceed with an action if such a burn rate may result in the product's causing substantial personal injury or substantial illness.

A4.5.8.1.1 When the product does not self-extinguish, the flame shall be allowed to continue for 60 s. Calculate the rate of burning using the actual distance of flame spread during the full 60 s. For example, the product ignites and burns 9 in. (229 mm) in 60 s. The burn rate is calculated as follows:

$$\frac{9 \text{ in.}}{60 \text{ s}} = 0.15 \text{ in./s (a flammable solid)} \quad \text{(A4.2)}$$

NOTE A4.4—While testing, samples shall not be extinguished prematurely if such action will affect the burn rate. For example, if a stuffed rabbit is ignited at the tip of one ear and the flame is extinguished when the flame reaches the base of the ear, this may produce an inflated burn rate if the ear material burns at a faster rate than the rest of the product.

A4.6 Requirements

A4.6.1 A toy shall be considered a flammable solid if it ignites and burns with a self-sustaining flame at a rate greater than 0.10 in./s (2.5 mm/s) along its major axis.

A4.6.2 *Criteria for Acceptance:*

A4.6.2.1 Sample size = four, whenever practical.

A4.6.2.2 A burn rate is not calculated for samples that do not ignite.

A4.6.2.3 Calculate the burn rate to two significant figures (to the nearest hundredth using conventional rounding rules, that is, for 5 or higher, round up).

A4.6.2.4 Round the burn rate to the nearest tenth (that is, round 0.15 up to 0.2).

A4.6.2.5 Level of acceptance = 0.1 in./s (2.5 mm/s), maximum, along the major axis.

A4.6.2.6 *Additional Guidance for Manufacturers*—Manufacturers' decisions on the performance of an item should be based on a minimum of four samples. This provides a reasonable opportunity for detecting undesirable variations in the product. Proceed as follows:

(1) If the burn rate of all samples is less than 0.1 in./s (2.5 mm/s), accept.

(2) If the burn rate of all samples is greater than 0.1 in./s (2.5 mm/s) but less than 0.15 in./s (3.75 mm/s), accept and consider further investigation for action to improve performance.

(3) If the burn rate of one of the samples is 0.15 in./s (3.75 mm/s) or greater, reject and repeat the test with four additional samples (one time only).

(4) If the burn rate of more than one sample is 0.15 in./s (3.75 mm/s) or greater, reject.

NOTE A4.5—CPSC makes its decision on whether a product is a flammable solid based on the burn rate of each individual sample. It then determines whether the product may cause substantial personal injury or substantial illness during or as a proximate result of any customary or reasonably foreseeable handling or use. CPSC has no objection to other laboratories rounding off to the nearest 0.1 in./s. It will calculate burn rates to two decimal places but does not envision enforcement action where the burn rate is greater than 0.10 in./s and less than 0.15 in./s. However, CPSC reserves the right to proceed if such burn rate may result in the product's causing substantial personal injury or substantial illness.

A5. RATIONALE FOR 2007 REVISIONS

A5.1 Definitions[12]

A5.1.1 *Section 3*—New definitions for terms used in this version of Consumer Safety Specification F 963:

hazardous magnet
hazardous magnetic component
impulsive sound
maximum A-weighted sound pressure level
rattle
reference
strap
tangle or form a loop
yo-yo elastic tether toy

A5.2 Sound Producing Toys

A5.2.1 *Sections 4.5 and 8.20*—These sections have been totally replace by a new set of requirements and a new test procedure.

A5.2.1.1 These requirements have been developed after extensive review of known research on noise-related injury to hearing and existing published recommendations for noise limits. They are intended to reduce the risk of damage to hearing due to high continuous and impulse noise levels. They apply only to toys that are designed to emit sound, i.e., toys that have sound producing features such as electric or electronic devices, percussion caps, rattling components, etc.

A5.2.1.2 The requirements in 4.5.1.1 and 4.5.1.2 are intended to address those hazards presented by continuous sounds (e.g., speech, music). These hazards are chronic and typically manifest themselves after years of exposure. The Occupational Safety and Health Administration (OSHA) has set acceptable limits at 85 dB(A) for 8 h of exposure. An independent audiologist consulted by the ASTM work group recommended a similar exposure level. His recommendations for an 8 h exposure level, Leq, 8h, were 85 dB(A) for continuous sound, and 82 dB(A) for the continuous sound emitted from toys that produce both continuous and impulsive sound.

A5.2.1.3 Exposure to noise from toys is intermittent and integrated with other daily noises. It is unlikely that a toy would present 8 h continuous exposure to sound. These assumptions are consistent with the findings of European research conducted by ISVR Consultancy Services in Southampton U.K. and published as "Noise from Toys and its Effect on Hearing." Based on that study, the probable duration of play with a sound producing toy was determined by the ISVR to be 1.5 h per day.

A5.2.1.4 Using the recommended exposure levels from the audiologist, the ISVR study's conclusion on the duration of play, and a 3 dB exchange rate, the equivalent recommended values are 92.3 dB(A) and 89.3 dB(A), respectively. Rounding each value to the nearest 5 dB(A) yields 90 dB(A) for both. The ISVR study referenced above also concluded that 25 cm was an average use distance for toys. However, a 50 cm distance is superior for measurement purposes. Therefore, the 25 cm, 90 dB(A) requirement was converted to its 50 cm equivalent. The 50 cm free-field equivalent of 90 dB(A) at 25 cm is 84 dB(A). This was rounded to 85 dB(A) to arrive at the final requirement.

A5.2.1.5 The ISVR study uses a distance for close-to-the-ear toys of 2.5 cm. Using the same reasoning applied above, the 50 cm free-field equivalent of 2.5 cm, 90 dB(A) is 64 dB(A). This was rounded to 65 dB(A) to arrive at the final close-to-the-ear-toy requirement.

A5.2.1.6 The requirements in 4.5.1.3-4.5.1.5 are intended to address those hazards presented by impulsive sounds (e.g., percussion caps), which can be especially hazardous. Permanent damage to hearing may occur after only one exposure to high impulsive sound levels.

A5.2.1.7 A technically accurate impulsive sound requirement would involve a combination of decibel levels and number of repetitions per day of the sound and also determining the potential for misuse (actuating close to the ear). This alternative would result in some subjective determinations regarding repetitions/day and the likelihood for actuating close

[12] This rationale pertains only to those changes made in the 2007 edition of Consumer Safety Specification F 963. Rationales for previous editions may be obtained from ASTM International Headquarters by requesting Research Report RR: F15-1000.

to the ear. Therefore, a conservative approach was adopted that limits impulsive sounds to 120 dB (C-weighted peak). This requirement protects against misuse and allows up to 10 000 repetitions per day according to OHSA guidelines. The 50 cm free-field equivalent of 25 cm, 120 dB(C) is 114 dB(C). This was rounded to 115 dB(C) to arrive at the final requirement. This requirement only applies to impulsive sounds created by non-explosive means (e.g., two masses colliding).

A5.2.1.8 Impulsive sound level requirements for toys that produce sound from explosion (e.g., caps) have been treated separately. A higher decibel level (125 dB(C)) is allowed for these types of toys because of the human ear's inability to respond to waveforms with such rapid rise-times such as these.

A5.3 Yo Yo Elastic Tether Toys

A5.3.1 *Sections 4.38 and 8.24*—The task group concluded that the mass on the end of the tether was significant in creating the strangulation potential of a yo yo elastic tether toy. That is why these yo yo products have been associated with near strangulations, and similar products with little mass on the end such as a "sticky" hand have no similar data. The mass was determined by weighing product known to be associated with wrapping around neck. Yo yo elastic tether samples evaluated weighed 0.1 kg (0.2 lb), 0.07 kg (.15 lb), and 0.07 kg (0 .15 lb). Estimated weight of sticky hand (hand portion only) is 0.0045 kg (0.01 lb). The appropriate value for the mass at the end of the tether was chosen to be between these two values, 0.02 kg (0.04 lb).

A5.3.1.1 The cord length is based on two times the neck circumference of a 5th-percentile 3-year-old from Childata, or 2×24.0 cm = 48 cm (18.9 in.). The age of 3 years was chosen based on the age of children involved in the incident data.

A5.3.1.2 The rotational speed of 80 RPM was determined by testing adults and determining the maximum RPM they can achieve rotating a product above their heads. The range of adult speed was 80 – 108 RPM, the average was 90 RPM and the standard deviation was 7 based on a sample size of 14. This was reduced to 80 RPM as an estimate for the speed children 3 to 6 years old can achieve. The incident data indicated that children 3 to 6 years old are most often involved in yo yo elastic tether incidents.

A5.4 Magnets in Toys

A5.4.1 *Section 4.39*—These requirements address the recent incidents of magnet ingestion resulting in serious injury or death by identifying magnets or magnetic components that can be readily swallowed. It requires these hazardous magnets and hazardous magnetic components to be reliably contained in a product, or carry a warning. Hazardous magnets and hazardous magnetic components are identified by describing both a magnetic strength of concern, along with a size and shape that can be swallowed. This is different than the small part cylinder which identifies shapes that have been associated with choking, not swallowing.

A5.4.1.1 The following areas were considered:

(a) Data indicate that powerful magnets have been involved in all known ingestion incidents to date. The data also suggest that magnet ingestion was not a problem in toys until powerful magnets (such as NIB magnets) became cost effective and commonplace several years ago. Ceramic, rubberized, and ferrite magnets have substantially lower attractive forces and therefore must be made larger to provide sufficient magnetism, which makes them less likely to be swallowed.

(b) The dimensions provided in the requirement are based on the size of magnets that have been involved in incidents. *(1)* 32 mm length and 11 mm diameter is 25 % larger than the small cylindrical piece ingested by a child. *(2)* 26 mm diameter and 5 mm thickness is based on the dimensions of a nickel plus 25 %. *(3)* A 22 mm sphere is based on a large marble size. Small marbles are 16 mm.

(c) The exemptions represent magnets which are used in applications that are not obvious to the consumer. These are very common magnet uses and there are no data associated with these magnets.

(d) Products intended for children under three are already subject to the small parts requirement which would include these magnets or magnetic components.

A5.4.2 *Section 5.17*—The warning specifically explains the hazard as "sticking across intestines." Studies of warnings show that when the audience can "picture it," even when there is no picture, then compliance with the warning increases. In the final analysis, the "intestines" statement makes this warning more effective than it would be without it.

A5.4.3 *Section 8.25*—If the play pattern of the toy includes repeated attaching and detaching of the magnet(s), the magnet(s) shall be subjected to repeated attachment and detachment that is expected over the life of the toy. Furthermore, if it is likely that other components included in the toy can attach to the magnet(s), then the magnet(s) and the other components shall be dropped/impacted together during use/abuse testing.

A5.5 Hemispheric Shaped Objects

A5.5.1 *Section 4.37*—Data analysis of the "cupped" shaped objects involved in the fatal and non-fatal incidents, indicated that the wall thickness of the objects involved in the incidents ranged from approximately 0.04 in. (1 mm) to 0.12 in. (3 mm). Based on this data, it was believed that wall thickness was not a concern. It is also important to note that, wall thickness is not a relevant factor for objects with diameters at the upper end of the requirements as these sized objects may fit around/under the chin.

A5.5.1.1 However, since publication of this requirement, questions have been raised in the United States and Europe regarding objects with "thick" walls or rims—what is the appropriate measurement for these objects, inner or outer diameter? The work group has discussed the intent of the requirement and has concluded that the inner diameter measurement is the critical element in determining whether or not a "cupped" shaped object has the potential to fit a child's face and create a vacuum. Therefore, a change from outer diameter to inner diameter is recommended.

A5.5.2 *Section 4.37.6(e)*—The new option for a single large opening in the base includes the area that is defined by the original two small opening minimum dimensions (0.080 in./2 mm) and the minimum space in between these openings (0.5 in./13 mm). The 0.66 in./17 mm dimension is calculated as 0.080/2 mm + 0.080/2 mm + 0.5/13 mm. This approach is consistent with the option for ventilation in 4.16.1.1. Similarly,

placement of this opening at least 0.5 in. (13 mm) from the rim of the object should ensure that facial features such as the nose or chin, or flesh, will not completely block the opening.

A5.6 Miscellaneous Technical Issues

A5.6.1 *Section 4.12*—The purpose of this section is to minimize the potential of asphyxiation hazards that may be caused by thin packaging film, including sheets and bags. Plastic sheeting/bags may adhere to a child's mouth and nose making it impossible to breathe. Since the most frequent pattern of death is the covering of the face, the exemption is based on the size of the face and not whether the plastic is a bag or a sheet. CPSC anthropometry data for the face of a 4 to 6-month-old indicates a minimum head height of 125 mm (4.9 in.) and minimum face width of 85 mm (3.3 in.). This is the basis for the exemption, which is a minor dimension of <3.9 in. (100 mm). Plastic sheets or bags with a minor dimension less than 3.9 in. (100 mm) will not entirely cover the face of a 4 to 6-month-old infant.

A5.6.1.1 Both ISO 8124 and EN71 allow for perforations of the sheeting if it does not meet the thickness requirements. There is no injury data from the EU to indicate that perforated film presents a hazard. The 1 % area for perforations is considered to be sufficient to sustain an air flow and prevent the adhering of the film to the face.

A5.6.2 *Section 4.14:*

A5.6.2.1 *Section 3.1.67*—Definition of strap added to clarify and expound test method verbiage in 4.14. Children under the age of 18 months have developed certain gross motor skills (e.g., can grasp and pick up objects). However, they lack fine motor skills such as those required to insert the end of cords/straps/elastics though a small opening or to wrap a cord/elastic multiple times around a wheel.

A5.6.2.2 *Section 4.14.1.1*—Details requirements for breakaway features on cords, straps, and elastics.

A5.6.2.3 *Section 4.14.2*—Clarifies scope of test method by adding ″strap″ as an additional type of cord/elastic covered by the requirement.

A5.6.2.4 *Section 8.23.2*—This section provides an additional testing method and supplemental diagrams (with details for additional equipment) that should be used for materials that have a loop perimeter smaller than the tapered end of the head probe.

A5.6.2.5 *Section 8.23.3*—Details testing method for determining the release force required for breakaway features on cords, straps, and elastics.

A5.7 Miscellaneous Editorial Changes

A5.7.1 *Section 4.6*—The word "choking" has been added to the test to be consistent with the language of 16 CFR 1501.

A5.7.2 *Section 4.15.6*—This section references the dynamic strength test in 8.21. This reference had been omitted in the previous version of Consumer Safety Specification F 963.

A5.7.3 *Section 4.17*—Reference to the wrong definition has been corrected to 3.1.53.

A5.7.4 *Section 4.25*—Abuse testing in 8.6-8.10 of the standard is not applied to toys intended for children over 96 months (this is laid out in Table 5). Therefore, it is redundant and unnecessary to break down the age group in this way in the requirement section.

A5.7.4.1 *Section 4.25.10.6(2)*—Corrected reference to test procedure to 8.19.7.

A5.7.5 *Section 8.6*—Explicitly states the age requirements as they pertain to abuse testing (for clarification). Also, the word "test" has been corrected to "toy" in the third sentence.

A5.7.6 *Section 8.19.6.1*—The text has been changed to correct errors in the procedure contained in the previous version of this section.

ASTM International takes no position respecting the validity of any patent rights asserted in connection with any item mentioned in this standard. Users of this standard are expressly advised that determination of the validity of any such patent rights, and the risk of infringement of such rights, are entirely their own responsibility.

This standard is subject to revision at any time by the responsible technical committee and must be reviewed every five years and if not revised, either reapproved or withdrawn. Your comments are invited either for revision of this standard or for additional standards and should be addressed to ASTM International Headquarters. Your comments will receive careful consideration at a meeting of the responsible technical committee, which you may attend. If you feel that your comments have not received a fair hearing you should make your views known to the ASTM Committee on Standards, at the address shown below.

This standard is copyrighted by ASTM International, 100 Barr Harbor Drive, PO Box C700, West Conshohocken, PA 19428-2959, United States. Individual reprints (single or multiple copies) of this standard may be obtained by contacting ASTM at the above address or at 610-832-9585 (phone), 610-832-9555 (fax), or service@astm.org (e-mail); or through the ASTM website (www.astm.org).