US005724485A

United States Patent [19]

Rainton

[11] **Patent Number: 5,724,485**

[45] **Date of Patent: Mar. 3, 1998**

[54] **ADAPTIVE CROSS CORRELATOR APPARATUS COMPRISING ADAPTIVE CONTROLLER FOR ADAPTIVELY ADJUSTING TRANSFER FUNCTIONS OF TWO FILTERS**

[75] Inventor: **David Rainton**, Soraku-Gun, Japan

[73] Assignee: **ATR Human Information Processing Research Laboratories**, Kyoto, Japan

[21] Appl. No.: **533,857**

[22] Filed: **Sep. 26, 1995**

[30] **Foreign Application Priority Data**

Sep. 30, 1994 [JP] Japan 6-236809

[51] **Int. Cl.**[6] **G06F 15/00**

[52] **U.S. Cl.** **395/20**; 381/71

[58] **Field of Search** 395/20, 2.28; 381/71; 379/402, 410; 370/290; 364/724.11, 514, 162; 367/124; 375/233; 348/664, 667, 663; 455/296

[56] **References Cited**

U.S. PATENT DOCUMENTS

Re. 32,580	1/1988	Atal et al.	395/2.28
4,255,791	3/1981	Martin	364/514
4,480,333	10/1984	Ross	381/71
4,669,115	5/1987	Messerschmitt	379/402
4,884,229	11/1989	Dekker	364/724.11
5,206,715	4/1993	Jung et al.	348/664
5,208,786	5/1993	Weinstein et al.	367/124
5,347,586	9/1994	Hill et al.	381/71
5,353,306	10/1994	Yamamoto	375/233
5,361,303	11/1994	Eatwell	381/71
5,367,342	11/1994	Bang	348/667
5,369,668	11/1994	Yamamoto	375/233
5,371,789	12/1994	Hirano	379/410
5,428,831	6/1995	Monzello et al.	455/296
5,475,445	12/1995	Yamaguchi et al.	348/663
5,526,347	6/1996	Chen et al.	370/290
5,568,411	10/1996	Batruni	364/724.19
5,590,205	12/1996	Popovich	381/71
5,602,926	2/1997	Ohashi et al.	381/71
5,623,402	4/1997	Johnson	364/162

OTHER PUBLICATIONS

Alfred O. Hero et al., "A New Generalized Cross Correlator", IEEE Transactions on Acoustics, Speech, and Signal Processing, vol. ASSP-33, No. 1, Feb. 1985.

G. Clifford Carter, "Coherence and Time Delay Estimation", Proceedings of the IEEE, vol. 75, No. 2, Feb. 1987.

Mordechai Segal et al., "Estimate-Maximize Algorithms for Multichannel Time Delay and Signal Estimation", IEEE Transactions on Signal Processing, vol. 39, No. 1, Jan. 1991.

Y. Bar-Shalom et al., "Analysis of Wide-Band Cross Correlation for Time-Delay Estimation", IEEE Transactions on Signal Processing, vol. 41, No. 1, Jan. 1993.

(List continued on next page.)

Primary Examiner—Robert W. Downs
Assistant Examiner—Sanjiv Shah
Attorney, Agent, or Firm—Birch Stewart Kolasch and Birch, LLP

[57] **ABSTRACT**

In an adaptive cross correlator apparatus, a first receiving section receives a signal and outputs the received signal as a first signal, and a second receiving section receives a further signal and outputs the received further signal as a second signal, wherein the second receiving section is provided at a position different from that of the first receiving section. A first filter filters the first signal with a first changeable transfer function and outputs a filtered first signal, and a second filter filters the second signal with a second changeable transfer function and outputs a filtered second signal. Further, a cross correlator calculates a cross correlation value by using a predetermined cross correlation function based on the filtered first and second signals, and then, an adaptive controller calculates a discriminant function value representing a misclassification measure of the first and second signals, based on the cross correlation value and a true delay between the first and second signals, and adaptively adjusts the respective first and second transfer functions of the first and second filters so that the calculated discriminant function value becomes a minimum.

10 Claims, 18 Drawing Sheets

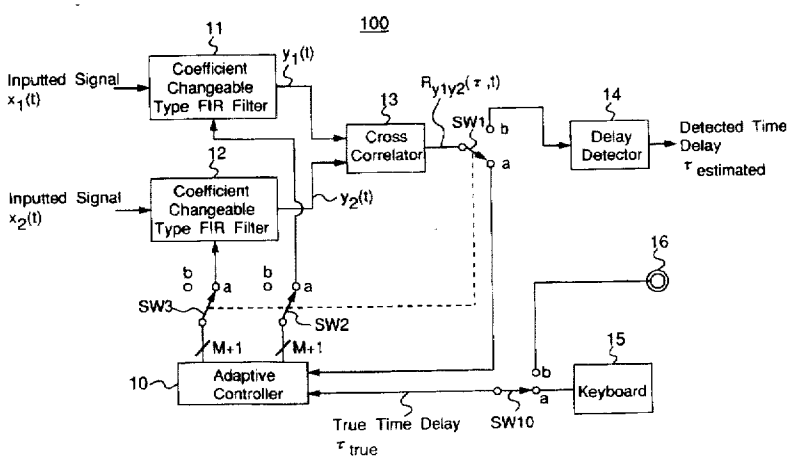

OTHER PUBLICATIONS

Giovanni Jacovitti et al., "Discrete Time Techniques for Time Delay Estimation", IEEE Transactions on Signal Processing, vol. 41, No. 2, Feb. 1993.

Strom et al., A reduced complexity adaptive near–far resistant receiver for DC–CDMA, IEEE global 93, pp. 1734–1738, Dec. 2, 1993.

Iltis et al., An adaptive multiuser detector with joint amplitude and delay estimation, IEEE Journal, pp. 774–785, Jun. 1994.

Malakian et al., Comparison of centralized and decentralized linear–quadratic–gaussian path control problems, IEEE proceedings, pp. 68–78, Oct. 17, 1991.

Malakian et al., Dynamic model dependency for a decentralized linear–quadratic–gaussian control problem, IEEE Proceedings, pp. 680–696, Oct. 18, 1990.

Feng et al., A new echo canceller with the estimation of flat delay, Tencon 92, pp. 1–5, Nov. 13, 1992.

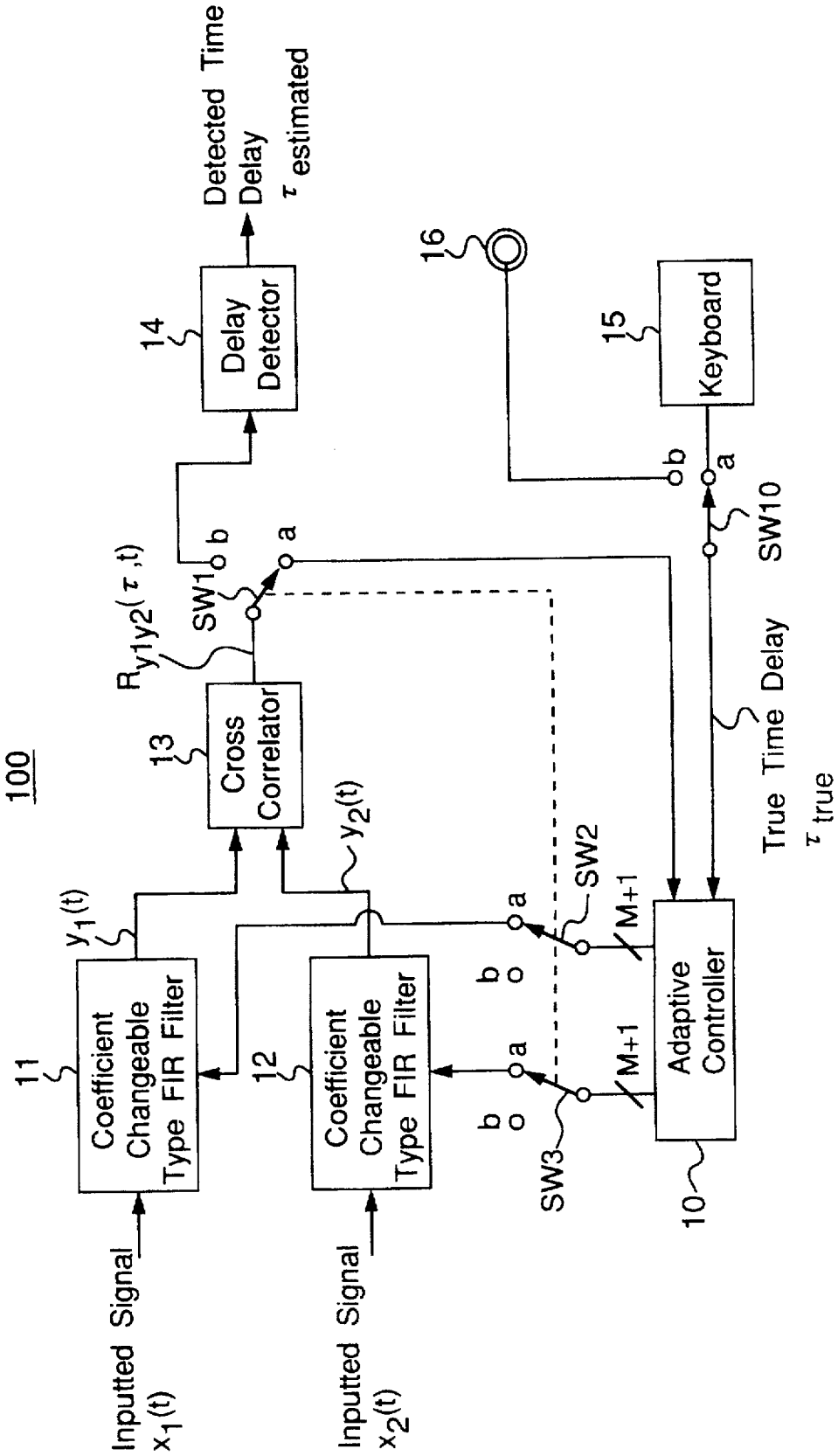
100
Inputted Signal $x_1(t)$
Inputted Signal $x_2(t)$
11
Coefficient Changeable Type FIR Filter
12
Coefficient Changeable Type FIR Filter
$y_1(t)$
$y_2(t)$
13
Cross Correlator
$R_{y1y2}(\tau,t)$
SW1
14
Delay Detector
Detected Time Delay τ estimated
SW2
SW3
M+1
M+1
10
Adaptive Controller
16
15
Keyboard
SW10
True Time Delay τ true

Fig. 1

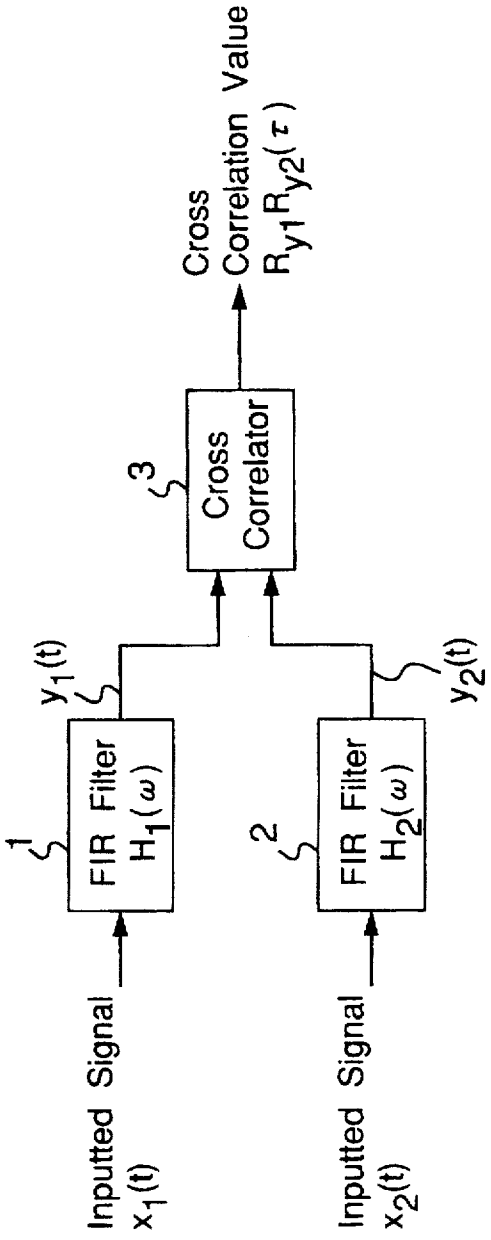

Fig.2 Prior Art

Fig.3

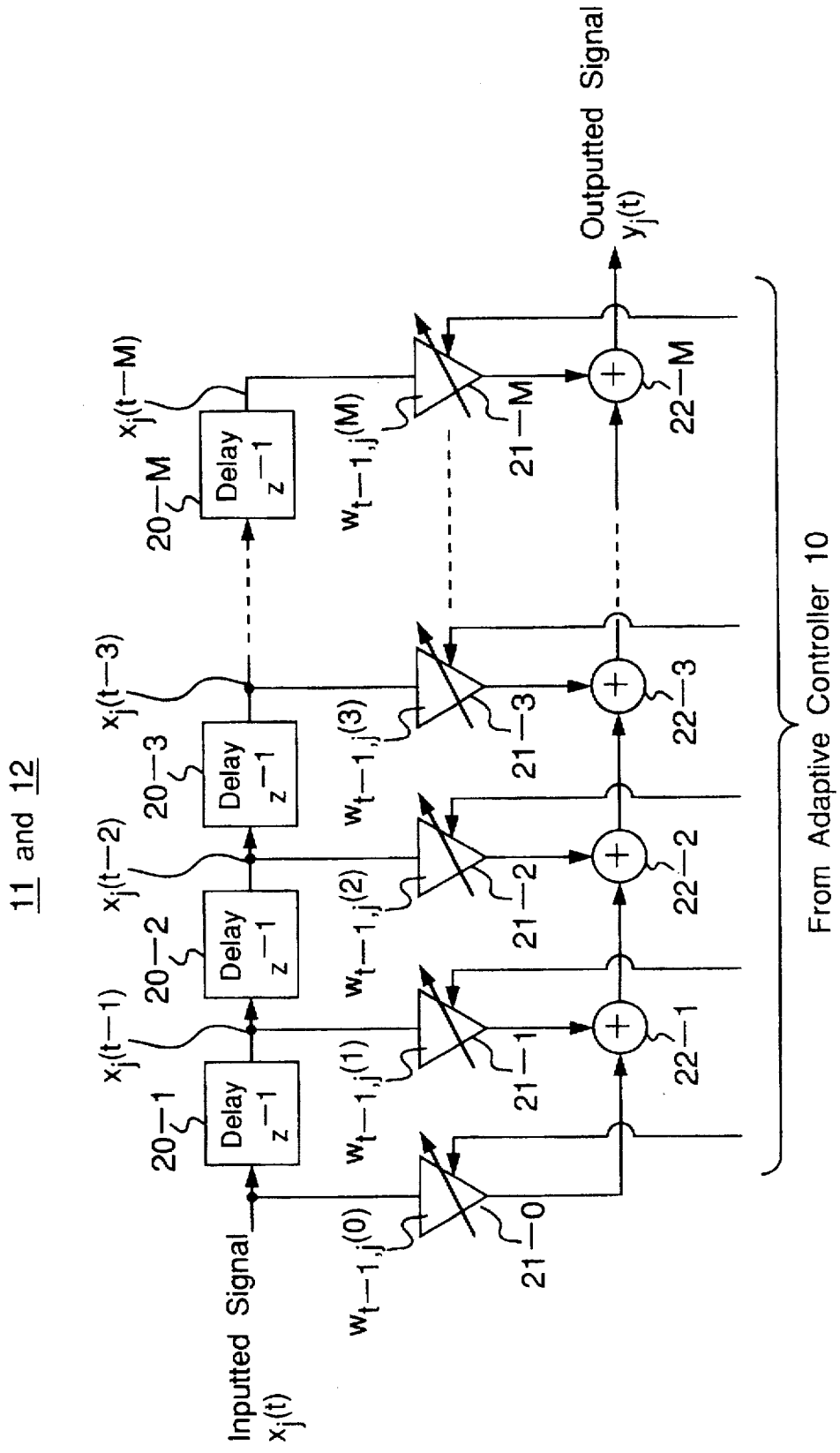
11 and 12
Inputted Signal
$x_j(t)$
$x_j(t-1)$
$x_j(t-2)$
$x_j(t-3)$
$x_j(t-M)$
20—1
20—2
20—3
20—M
Delay
z^{-1}
$w_{t-1,j}(0)$
$w_{t-1,j}(1)$
$w_{t-1,j}(2)$
$w_{t-1,j}(3)$
$w_{t-1,j}(M)$
21—0
21—1
21—2
21—3
21—M
22—1
22—2
22—3
22—M
Outputted Signal
$y_j(t)$
From Adaptive Controller 10

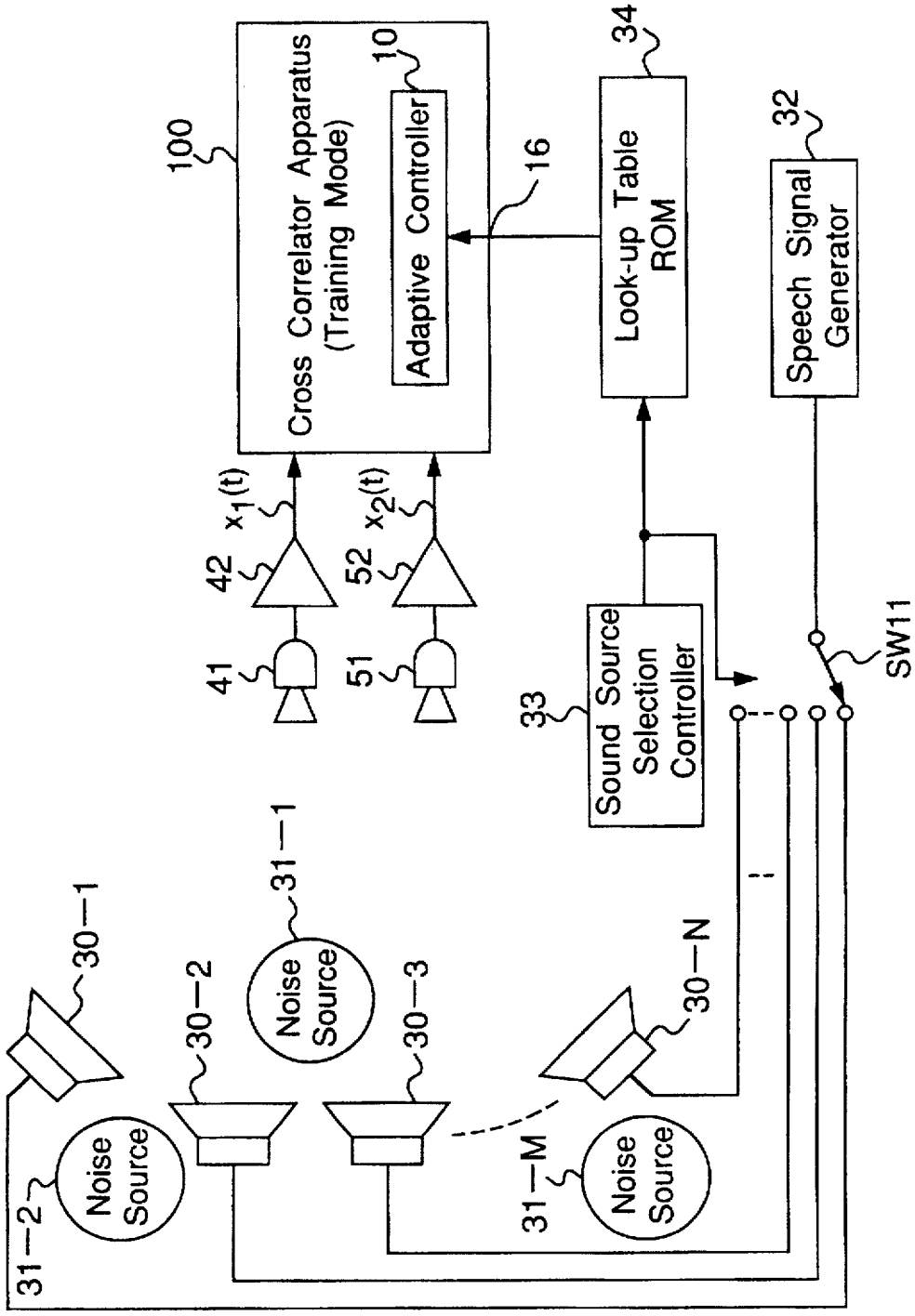
100
Cross Correlator Apparatus
(Training Mode)
10
Adaptive Controller
16
34
Look-up Table
ROM
32
Speech Signal
Generator
$x_1(t)$
$x_2(t)$
42
52
41
51
33
Sound Source
Selection
Controller
SW11
30—1
30—2
30—3
30—N
31—1
31—2
31—M
Noise
Source
Noise
Source
Noise
Source

Fig.4

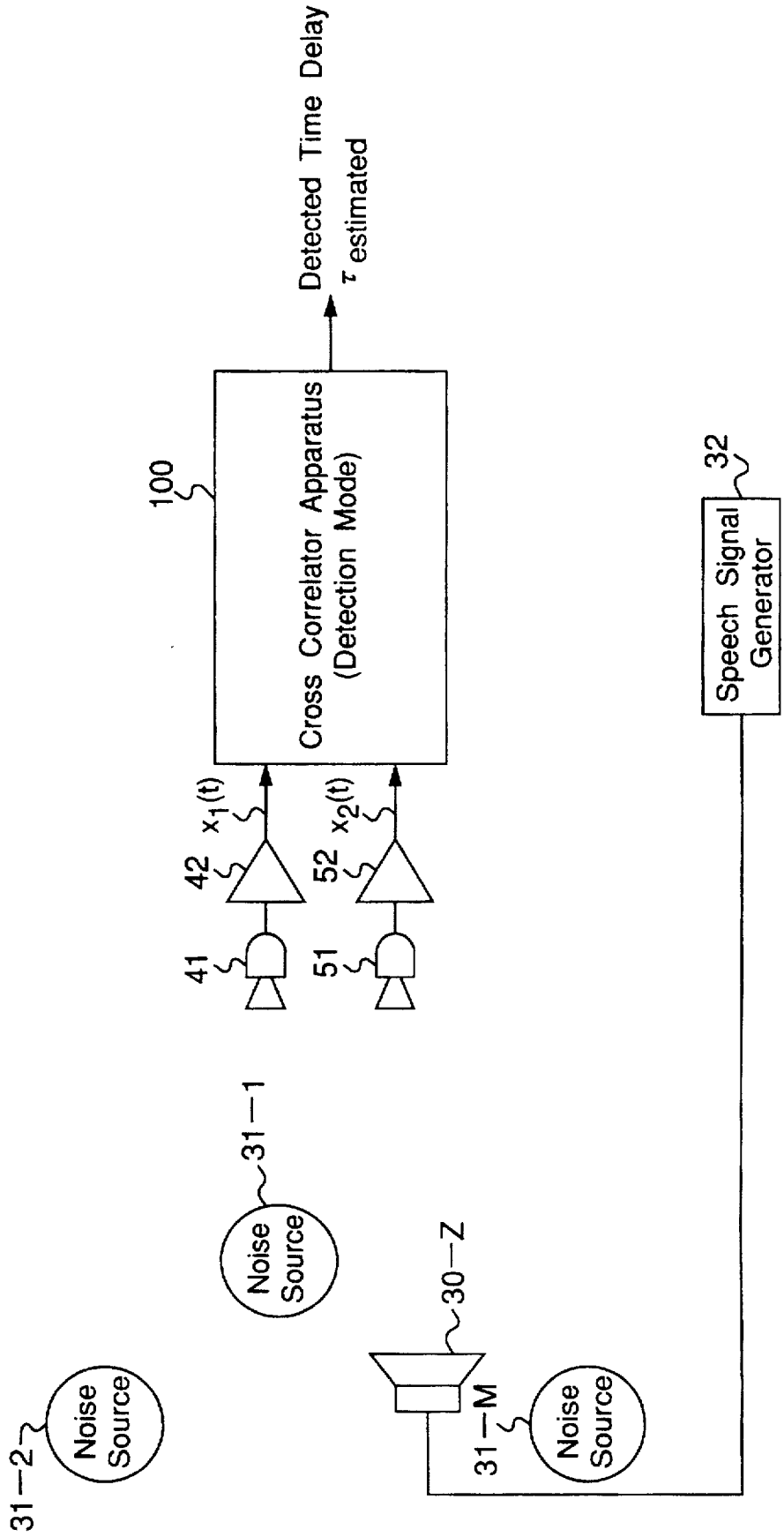
Detected Time Delay
τ estimated
100
Cross Correlator Apparatus
(Detection Mode)
x1(t)
x2(t)
42
52
41
51
31—1
Noise Source
31—2
Noise Source
30—Z
31—M
Noise Source
32
Speech Signal Generator

Fig.5

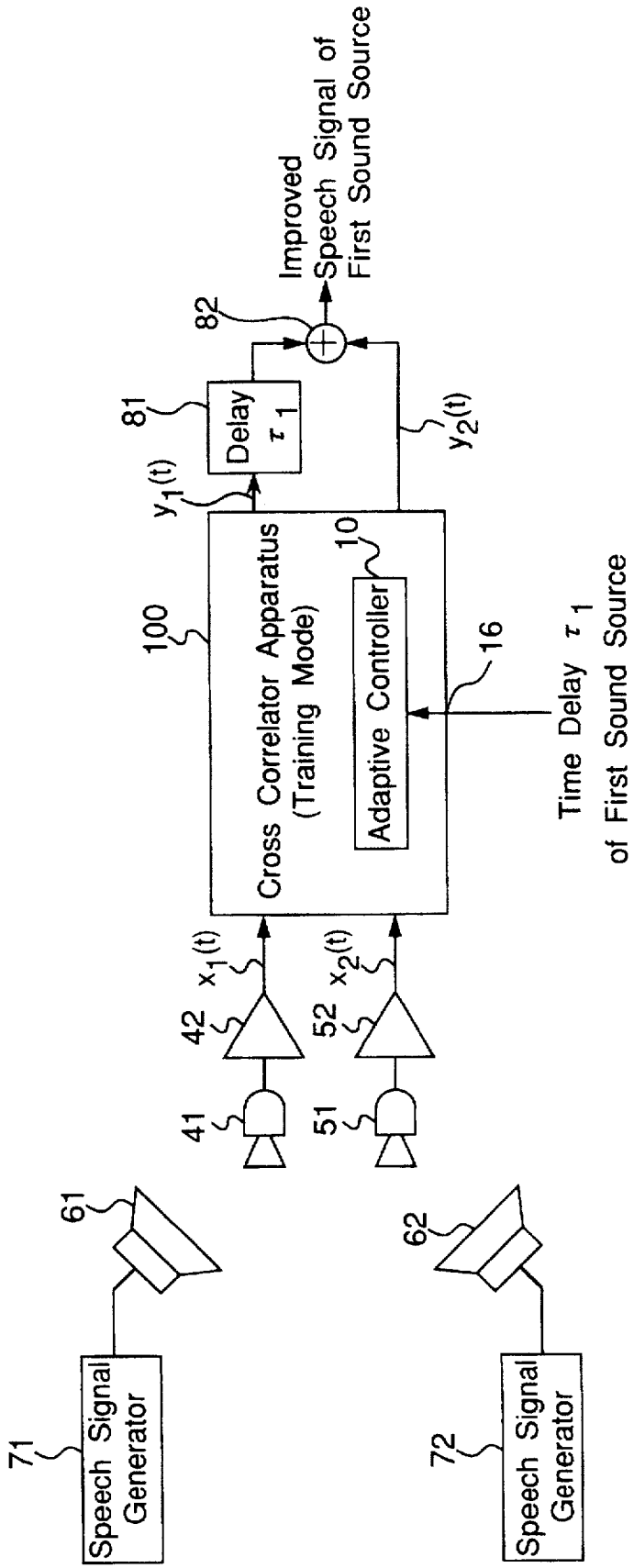
Improved Speech Signal of First Sound Source
82
81
Delay τ 1
y1(t)
y2(t)
100
Cross Correlator Apparatus (Training Mode)
10
Adaptive Controller
16
Time Delay τ 1 of First Sound Source
x1(t)
x2(t)
42
52
41
51
61
62
71
72
Speech Signal Generator
Speech Signal Generator

Fig.6

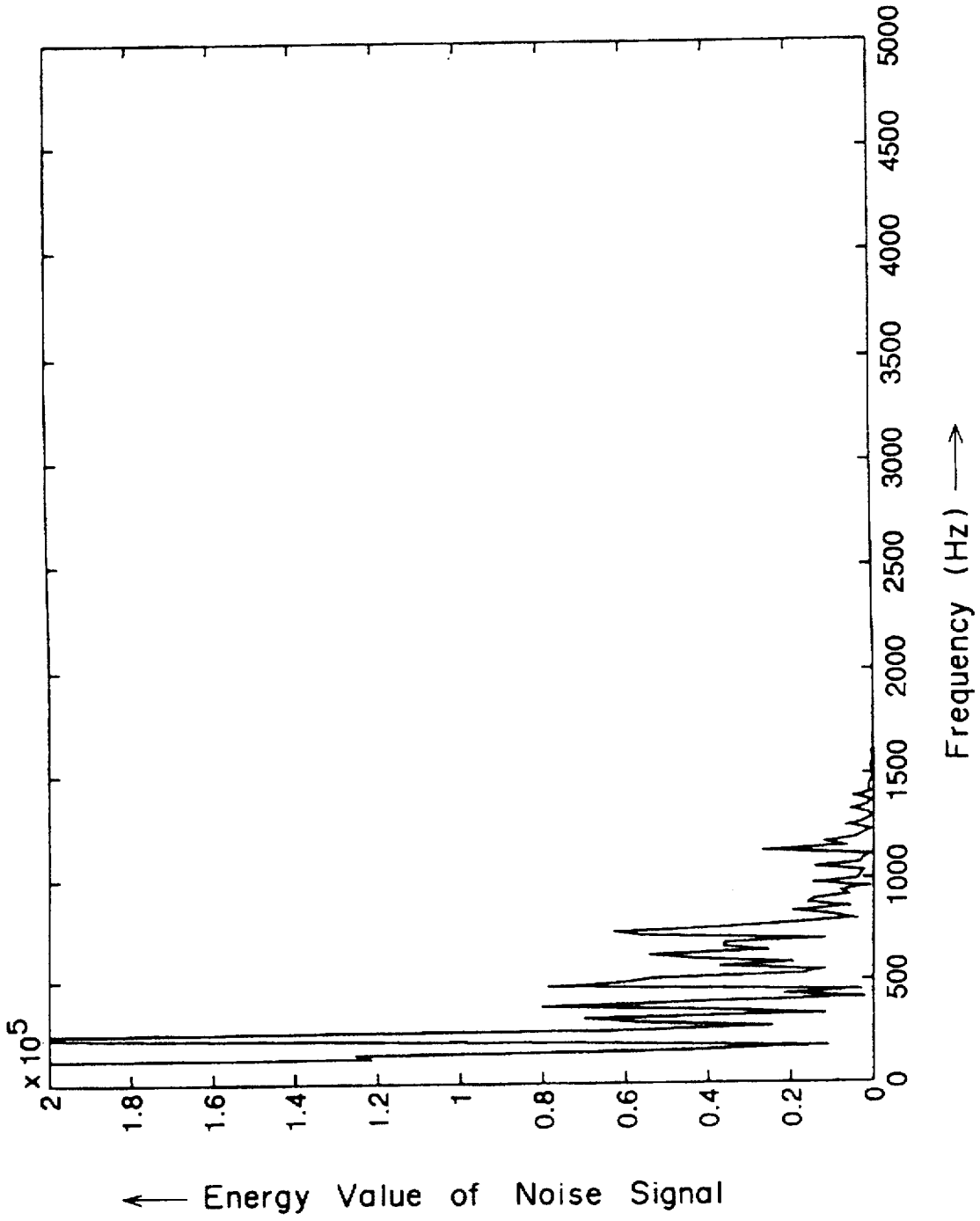
x 10^5
2
1.8
1.6
1.4
1.2
1
0.8
0.6
0.4
0.2
0
0
500
1000
1500
2000
2500
3000
3500
4000
4500
5000
Frequency (Hz)
Energy Value of Noise Signal

Fig. 7

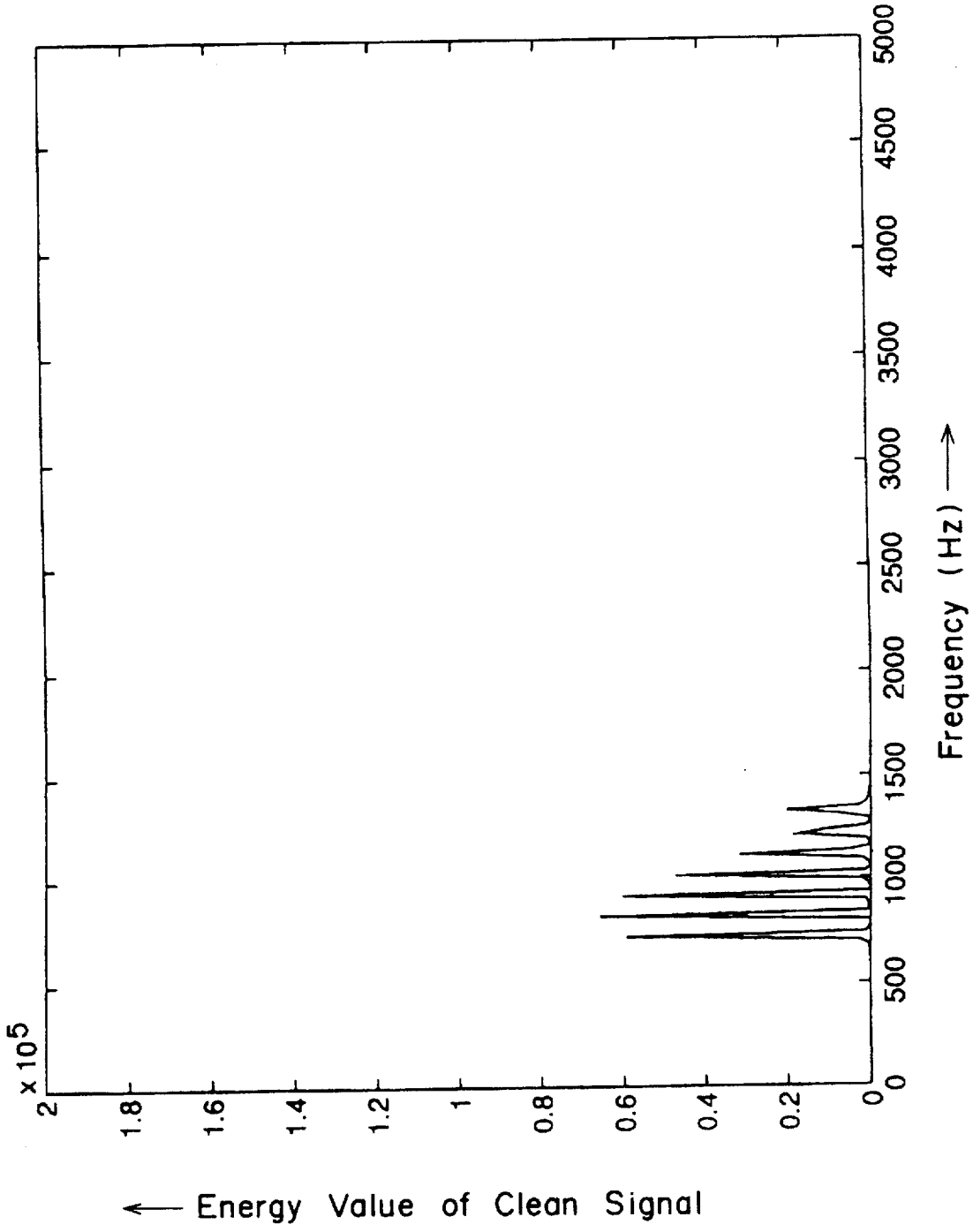
x 10^5
2
1.8
1.6
1.4
1.2
1
0.8
0.6
0.4
0.2
0
0
500
1000
1500
2000
2500
3000
3500
4000
4500
5000
Frequency (Hz) →
← Energy Value of Clean Signal

Fig. 8

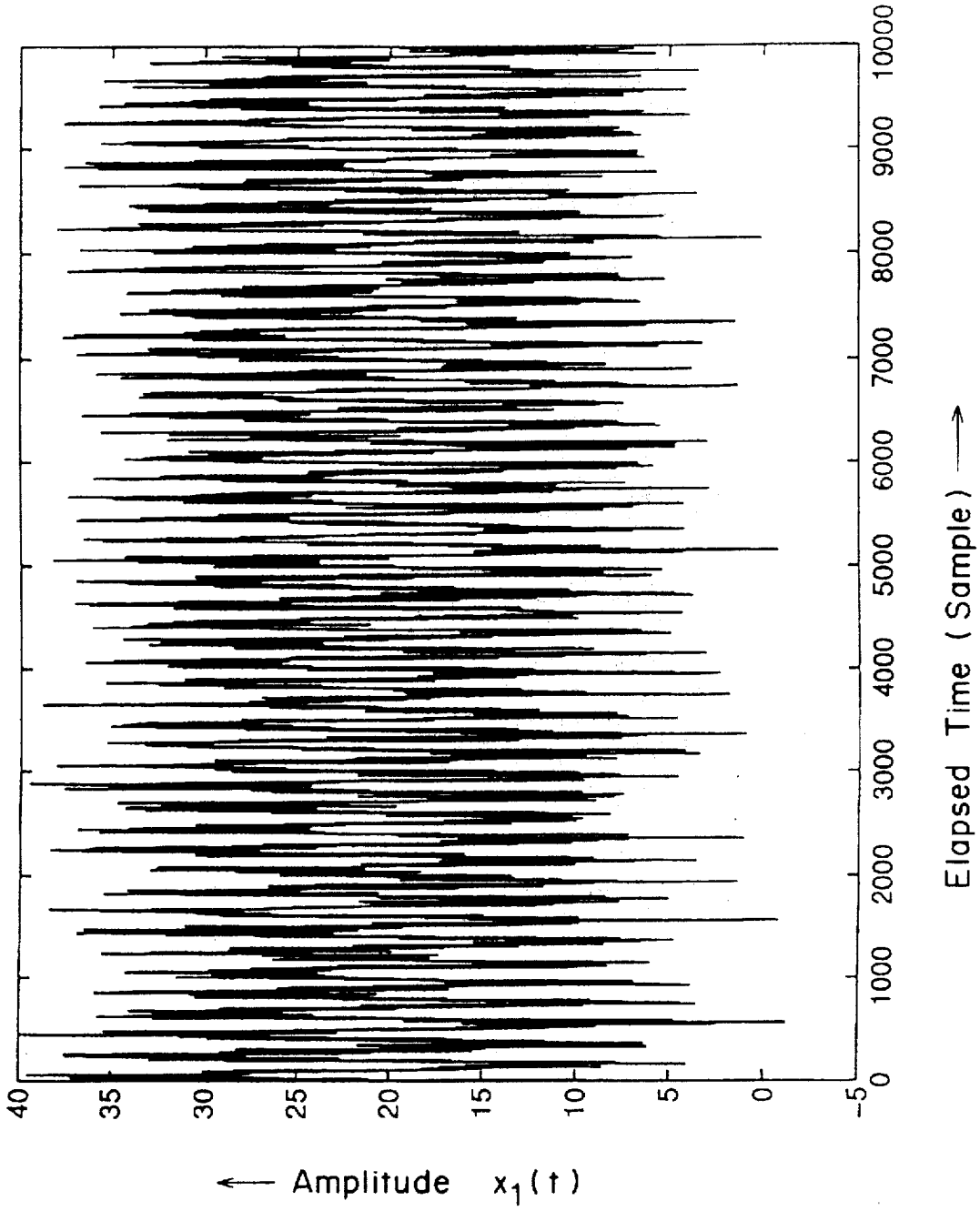
40
35
30
25
20
15
10
5
0
-5
0
1000
2000
3000
4000
5000
6000
7000
8000
9000
10000
← Amplitude $x_1(t)$
Elapsed Time (Sample) →

Fig. 9

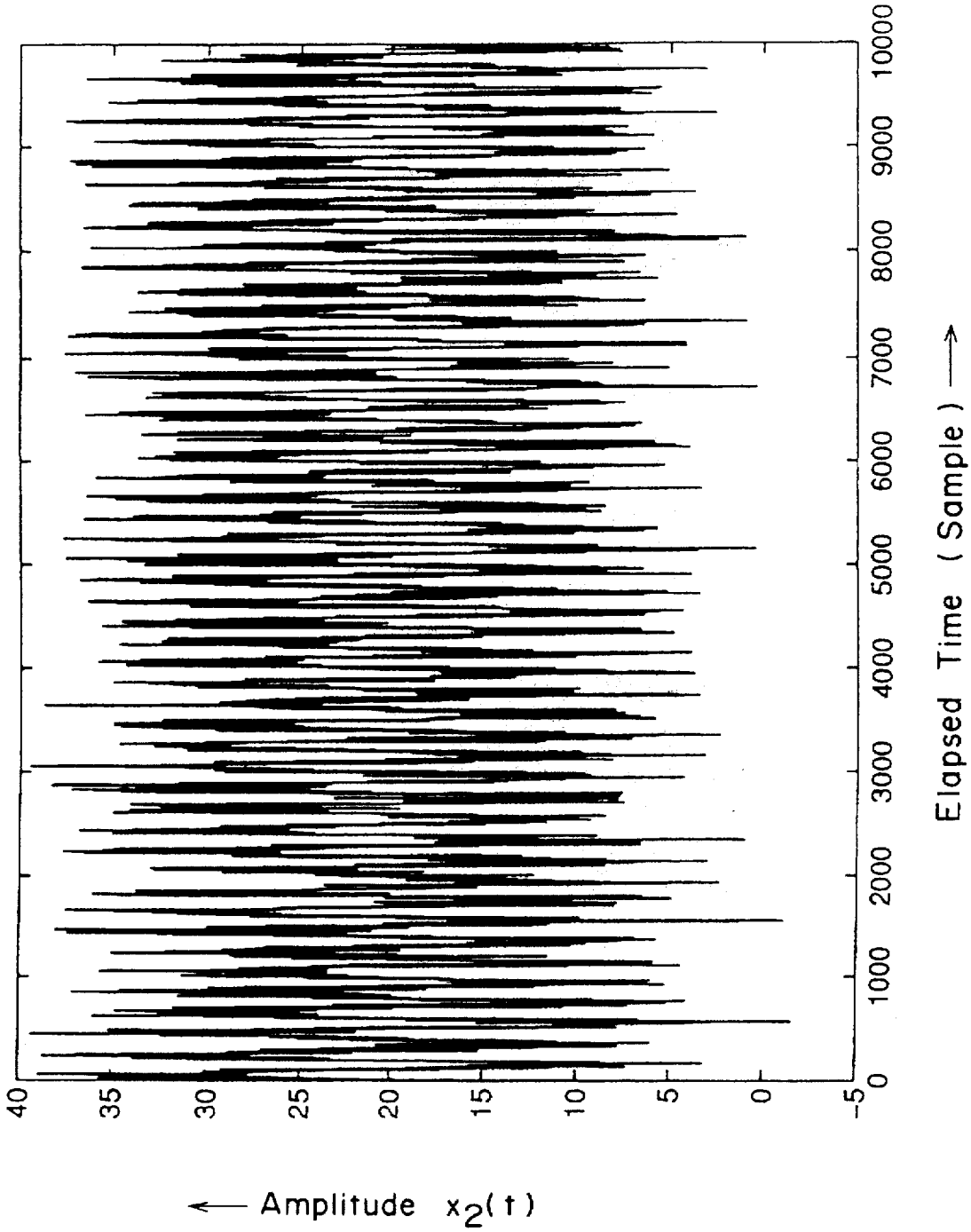
40
35
30
25
20
15
10
5
0
-5
0
1000
2000
3000
4000
5000
6000
7000
8000
9000
10000
Elapsed Time (Sample) ⟶
⟵ Amplitude $x_2(t)$

Fig. 10

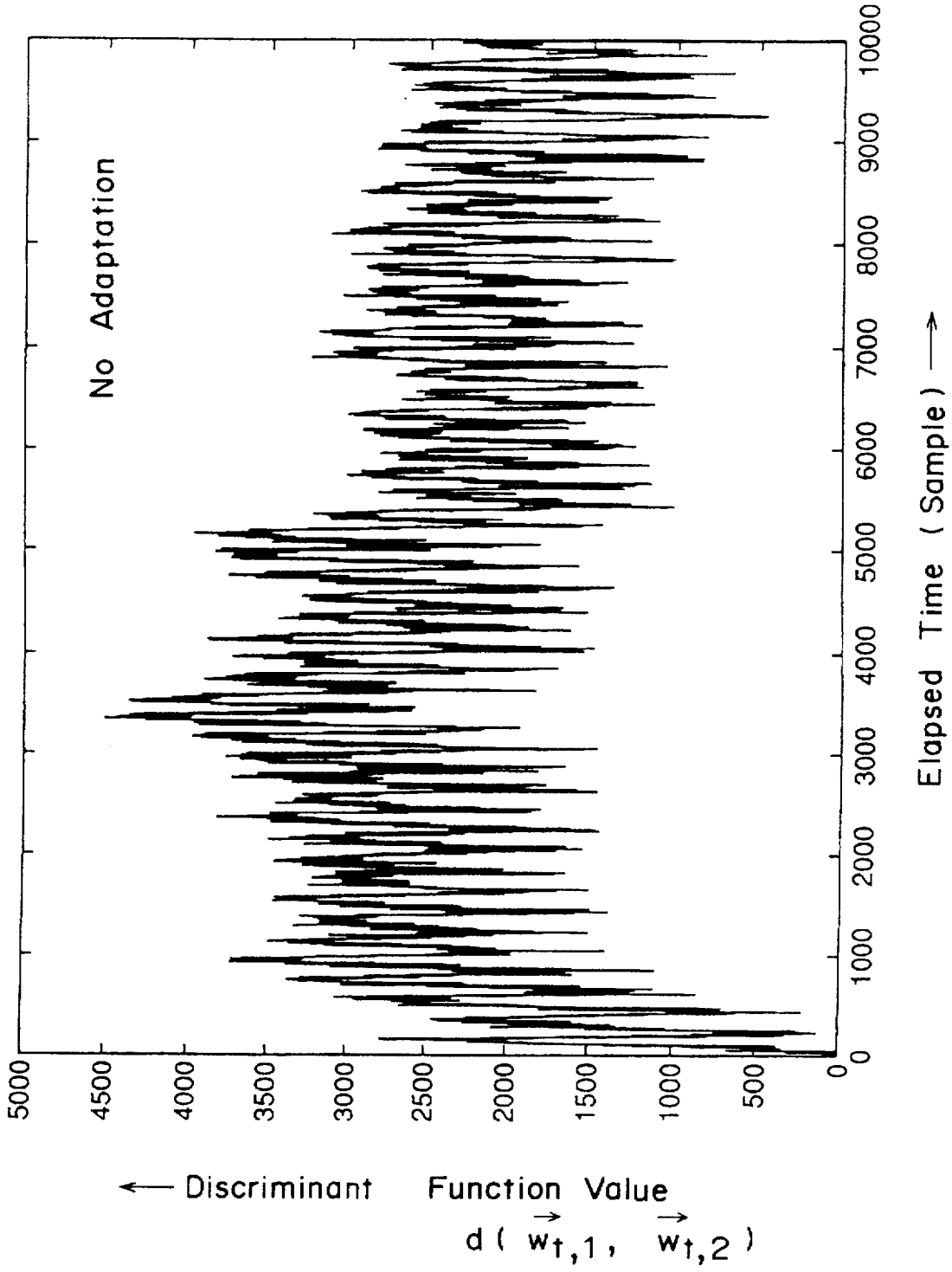
No Adaptation
5000
4500
4000
3500
3000
2500
2000
1500
1000
500
0
0
1000
2000
3000
4000
5000
6000
7000
8000
9000
10000
Elapsed Time (Sample) →
← Discriminant Function Value
d ($\vec{w}_{t,1}$, $\vec{w}_{t,2}$)

Fig. 11

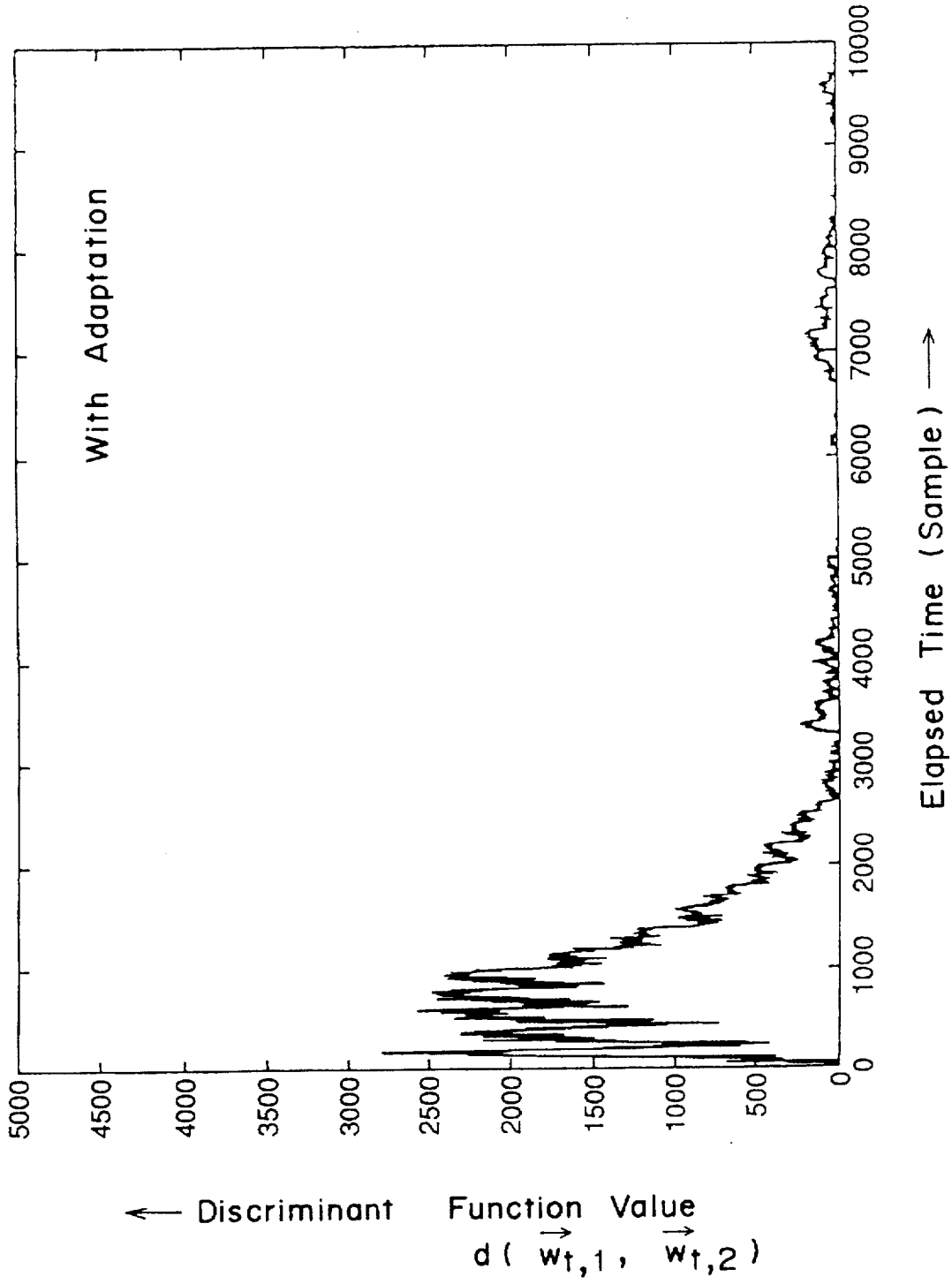
With Adaptation
5000
4500
4000
3500
3000
2500
2000
1500
1000
500
0
0
1000
2000
3000
4000
5000
6000
7000
8000
9000
10000
← Discriminant Function Value
d ($\vec{w}_{t,1}$, $\vec{w}_{t,2}$)
Elapsed Time (Sample) →

Fig. 12

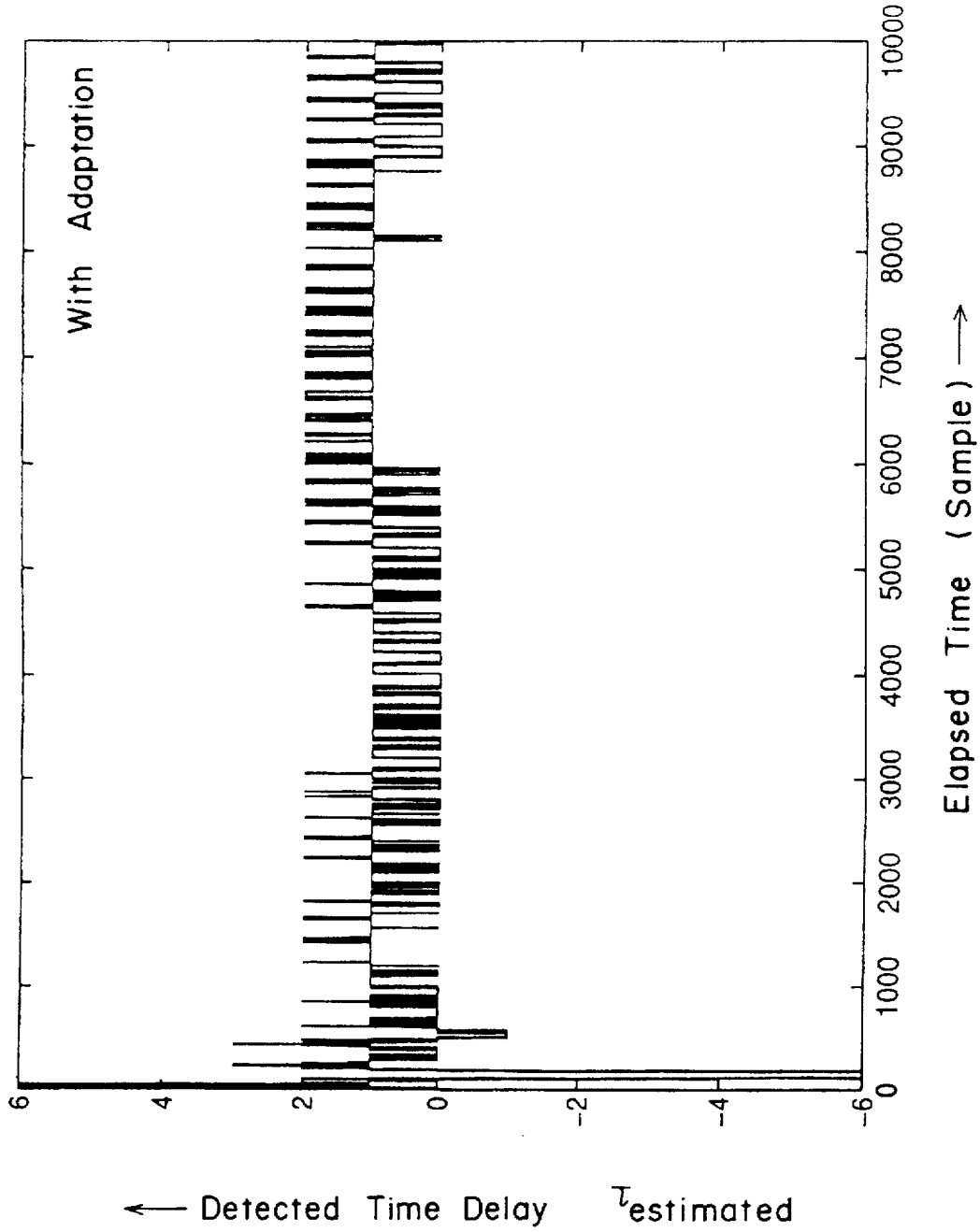
With Adaptation
6
4
2
0
-2
-4
-6
0
1000
2000
3000
4000
5000
6000
7000
8000
9000
10000
Elapsed Time (Sample) →
← Detected Time Delay $\tau_{estimated}$

Fig. 13

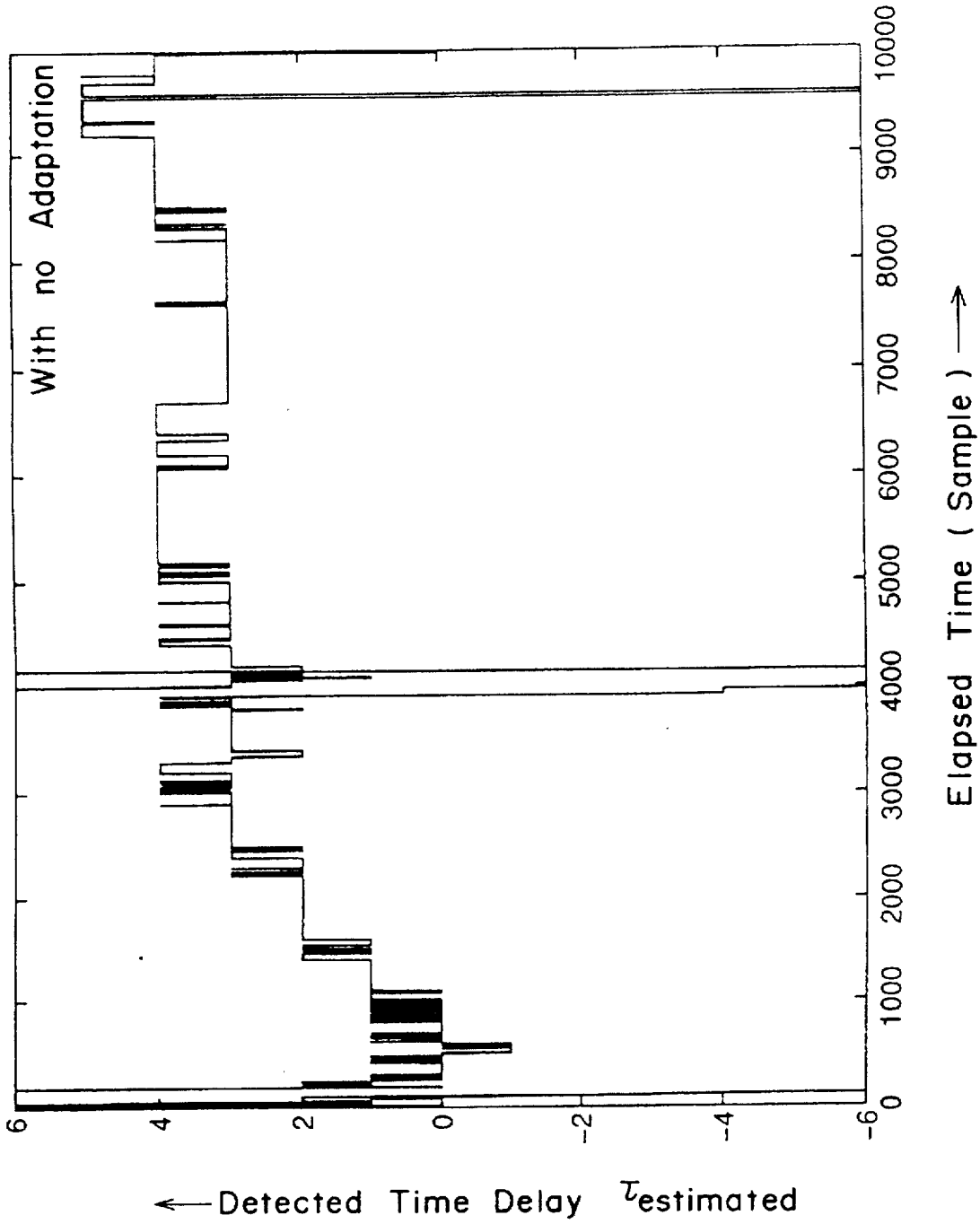
With no Adaptation
6
4
2
0
-2
-4
-6
0
1000
2000
3000
4000
5000
6000
7000
8000
9000
10000
Elapsed Time (Sample) →
← Detected Time Delay $\tau_{estimated}$

Fig. 14

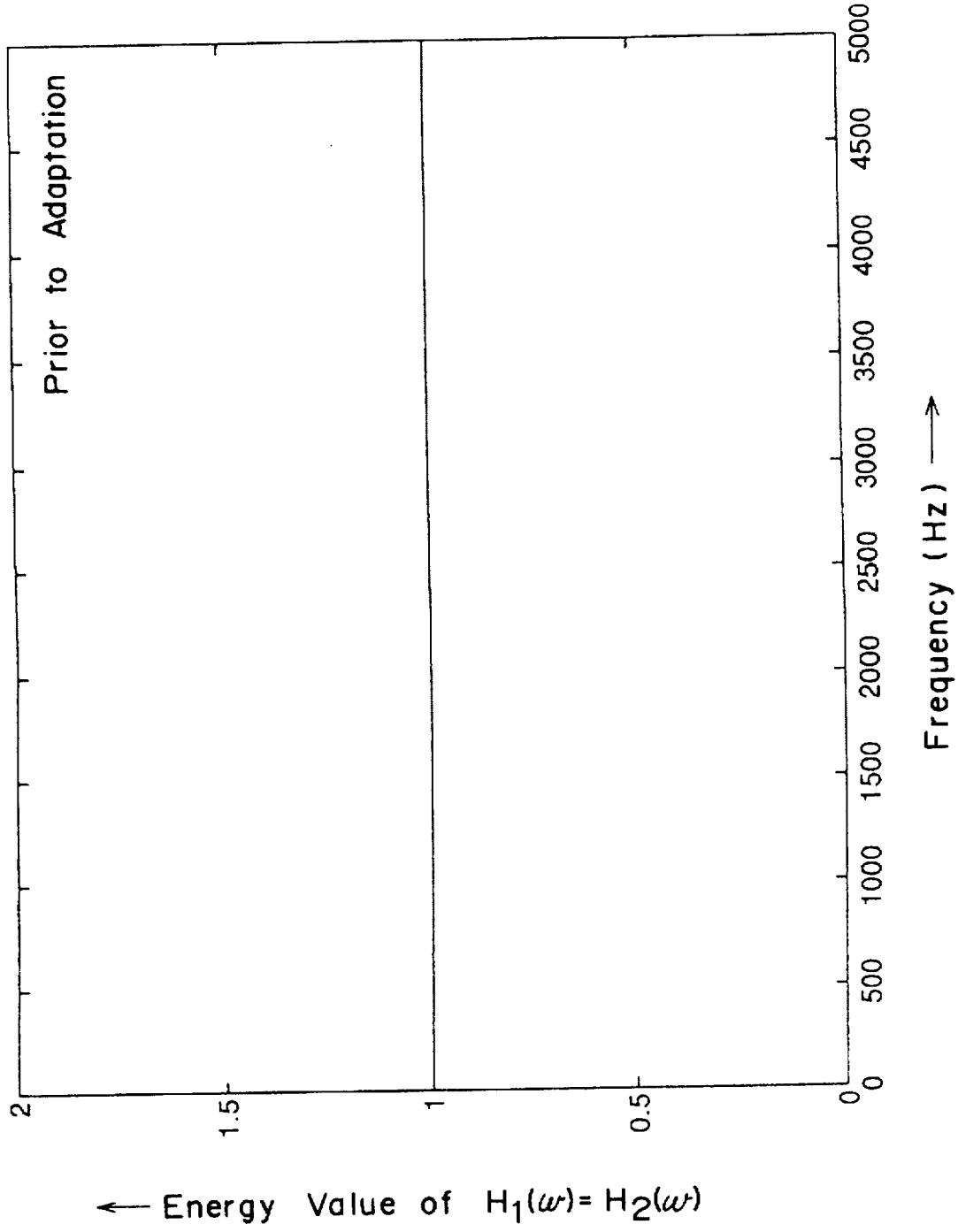
Prior to Adaptation
2
1.5
1
0.5
0
0
500
1000
1500
2000
2500
3000
3500
4000
4500
5000
Frequency (Hz) →
← Energy Value of $H_1(\omega) = H_2(\omega)$

Fig. 15

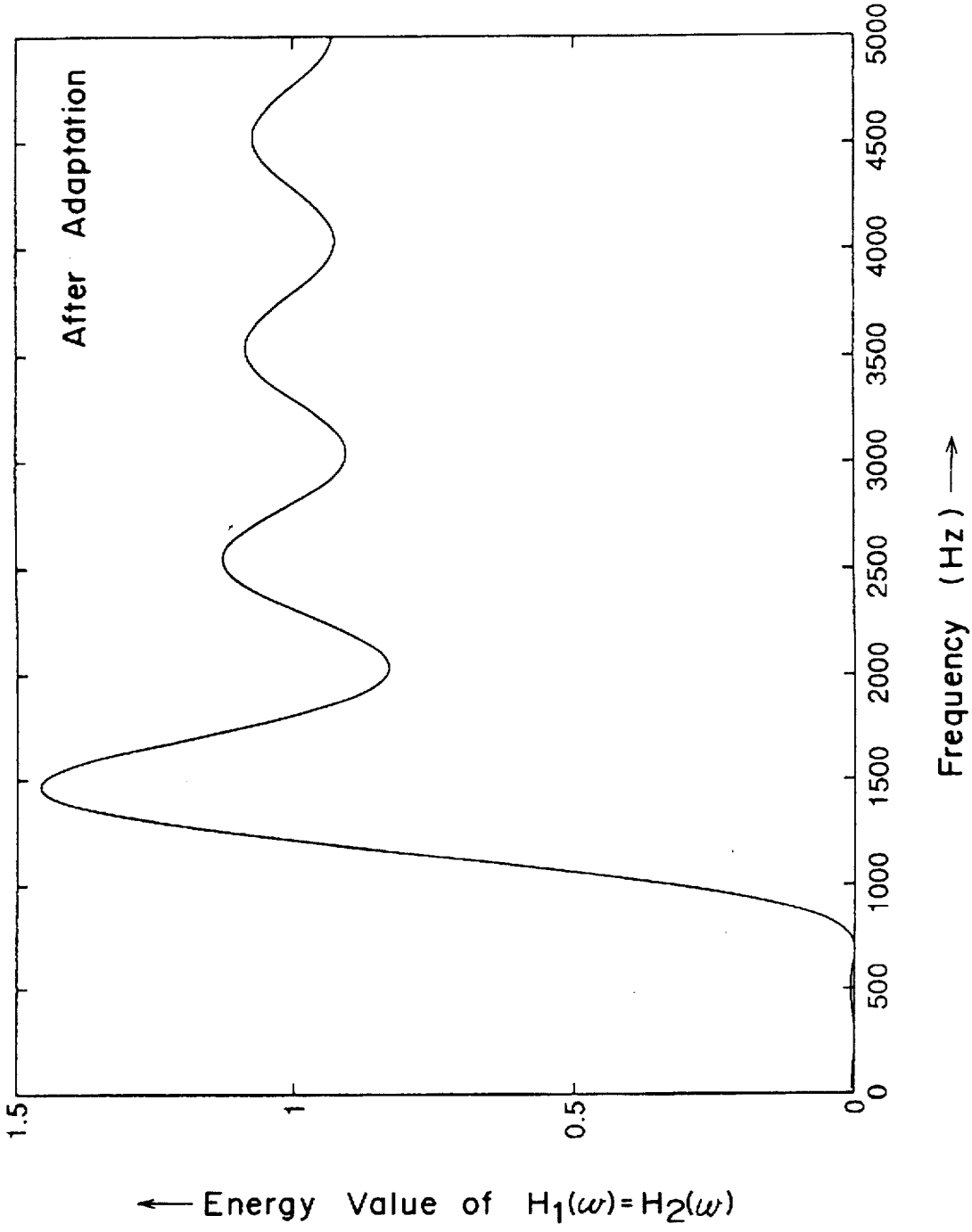
After Adaptation
1.5
1
0.5
0
0
500
1000
1500
2000
2500
3000
3500
4000
4500
5000
Frequency (Hz) →
← Energy Value of $H_1(\omega)=H_2(\omega)$

Fig. 16

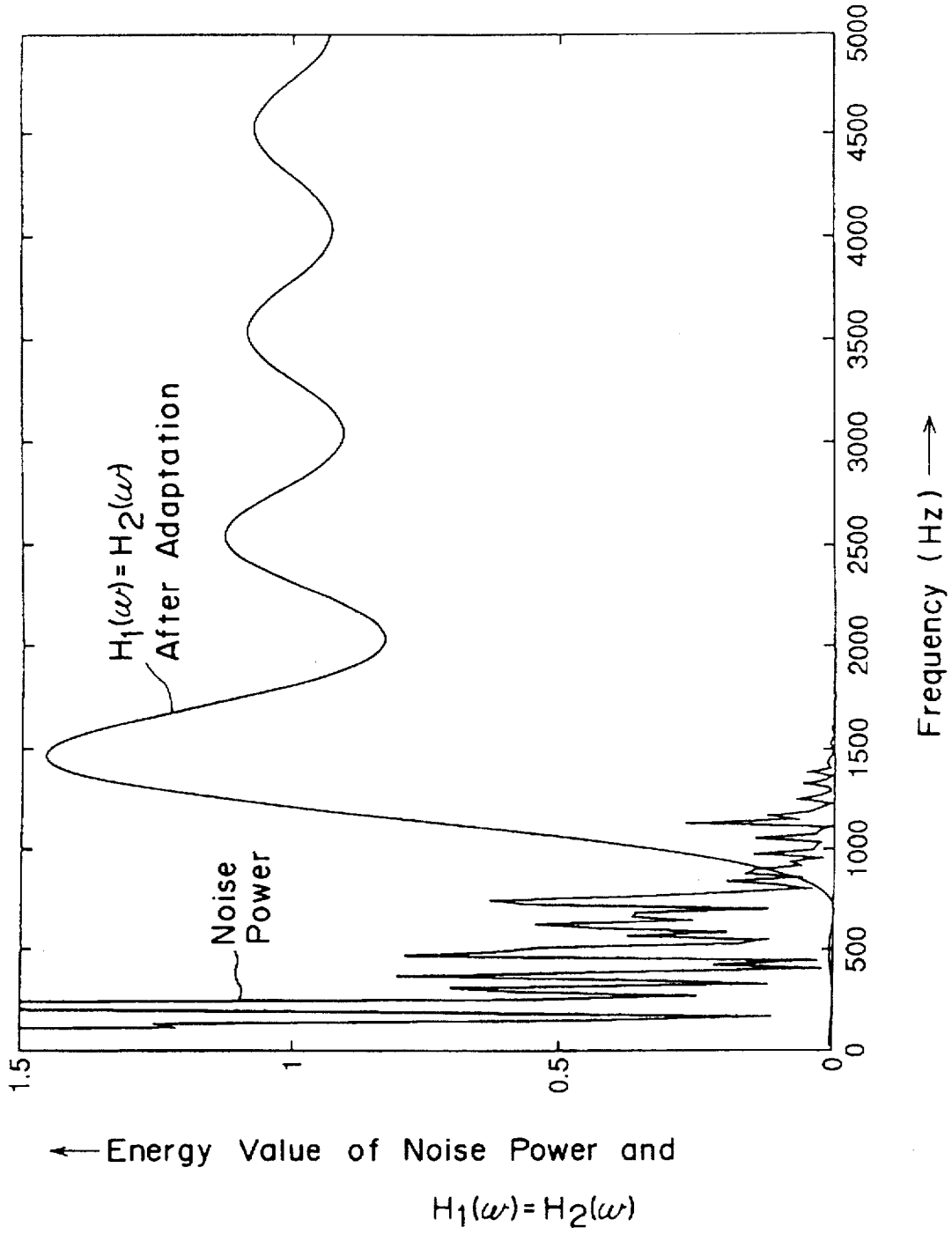
$H_1(\omega) = H_2(\omega)$
After Adaptation
Noise
Power
1.5
1
0.5
0
0
500
1000
1500
2000
2500
3000
3500
4000
4500
5000
Frequency (Hz) →
← Energy Value of Noise Power and
$H_1(\omega) = H_2(\omega)$

Fig. 17

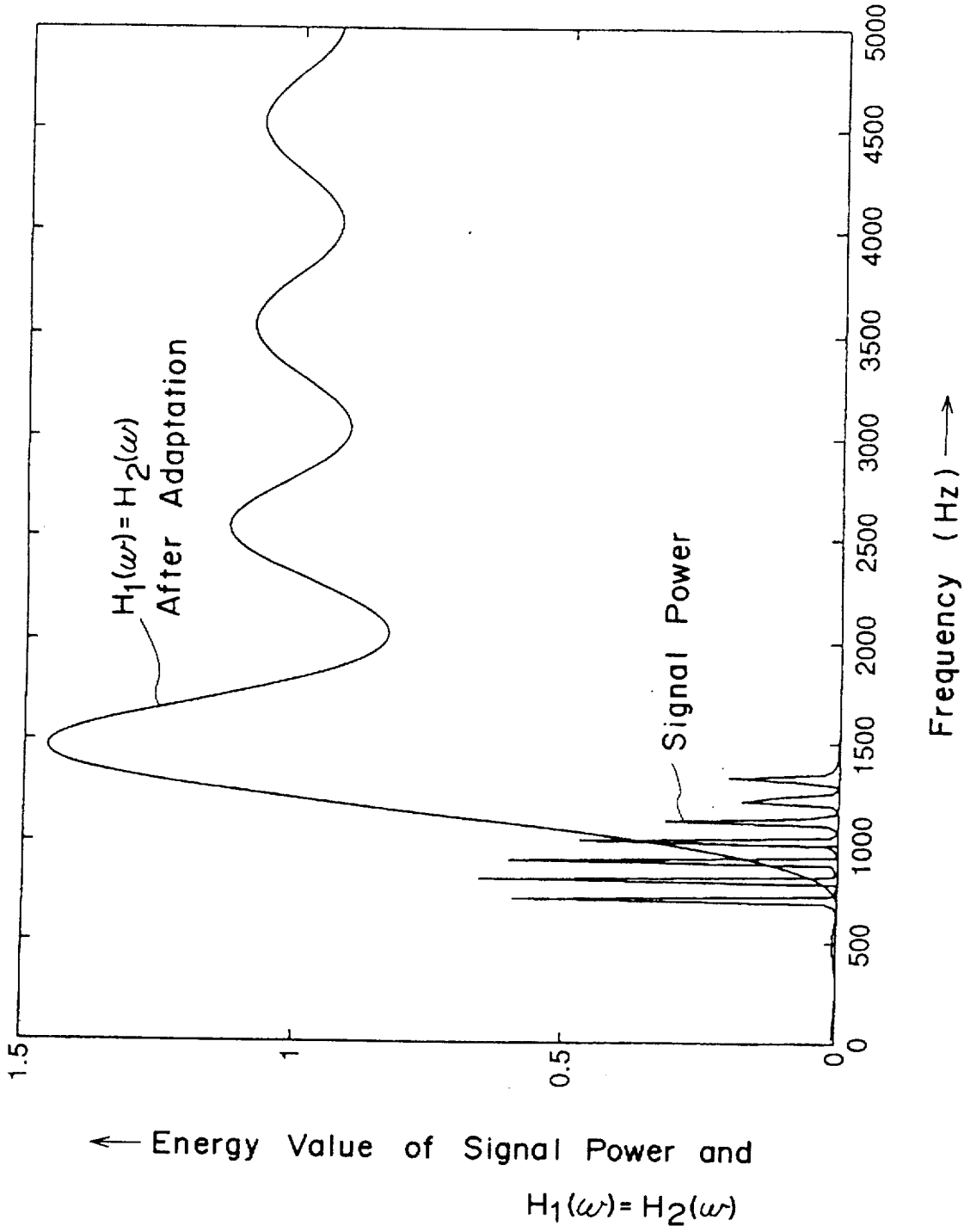

$H_1(\omega) = H_2(\omega)$
After Adaptation
Signal Power
Frequency (Hz) →
0
500
1000
1500
2000
2500
3000
3500
4000
4500
5000
1.5
1
0.5
0
← Energy Value of Signal Power and
$H_1(\omega) = H_2(\omega)$

Fig. 18

ADAPTIVE CROSS CORRELATOR APPARATUS COMPRISING ADAPTIVE CONTROLLER FOR ADAPTIVELY ADJUSTING TRANSFER FUNCTIONS OF TWO FILTERS

BACKGROUND OF THE INVENTION

1. Field of the Invention

The present invention relates to an adaptive cross correlator apparatus, in particularly, to an adaptive cross correlator comprising two filters and an adaptive controller for adaptively adjusting transfer functions of the two filters.

2. Description of the Related Art

The most common method of determining the time delay between two signals $x_1(t)$ and $x_2(t)$ is to compute a cross correlation value $Rx_1x_2(\tau)$ of a cross correlation function expressed by the following Equation (1):

$$Rx_1x_2(\tau) = \frac{1}{T-\tau}\int_{\tau}^{T} x_1(t)x_2(t-\tau)dt \quad (1)$$

where the argument τ that maximizes the value of the Equation (1) provides an estimate of the delay. In order to improve this estimation, it is preferred to pre-filter the two signals $x_1(t)$ and $x_2(t)$ prior to the operation of cross correlation. This simple, but very important process is known as a generalized cross correlation (See, for example, G. Clifford Carter, "Coherence and time delay estimation", Proceedings of IEEE, Vol. 75, No. 2, pp. 236–255, in February, 1987; hereinafter, referred to as a reference document **1**). The conventional generalized cross correlator apparatus implemented as a preprocessor for inputted waveforms is shown in FIG. **2**.

As shown in FIG. **2**, inputted signals $x_1(t)$ and $x_2(t)$ are received by, for example, finite impulse response filters (hereinafter referred to as FIR filters) **1** and **2**. Then, outputted signals $y_1(t)$ and $y_2(t)$ showing filtering results are outputted from the FIR filters **1** and **2**, and are inputted to a cross correlator **3**. The cross correlator **3** performs a computation of cross correlation of the Equation (1) based on the inputted signals $y_1(t)$ and $y_2(t)$ so as to calculate and output a cross correlation value $Ry_1y_2(\tau)$.

The reference document i shows that, in the cross correlator apparatus of FIG. **2**, if transfer functions $H_1(\omega)$ and $H_2(\omega)$ of the FIR filters **1** and **2** are appropriately selected, the FIR filters **1** and **2** having transfer functions $H_1(\omega)$ and $H_2(\omega)$ can be remarkably improved in the estimates of filtering time delay. The two FIR filters **1** and **2** are able to emphasize the signal passed to the cross correlator **3** at those frequencies at which the coherence therebetween or signal-to-noise ratio (SNR) is the highest. For example, it is well known to those skilled in the art how the transfer functions $H_1(\omega)$ and $H_2(\omega)$ of the FIR filters **1** and **2** should be chosen in order to achieve the time delay estimation (TDE) with minimum errors on the assumption that the two signals are Gaussian and contain Gaussian noise. Further, the reference document **1** also proposes a whole set or group of ad hoc filters.

However, this approach of the conventional method has had such a problem that errors would occur theoretically in detecting the time delay within non-Gaussian noise and estimating the signal-to-noise ratio.

SUMMARY OF THE INVENTION

An essential object of the present invention is therefore to provide an adaptive cross correlator apparatus capable of

adaptively adjust transfer functions $H_1(\omega)$ and $H_2(\omega)$ of two filters so that no error occurs when detecting the time delay between two inputted signals within a non-Gaussian noise, and without giving a signal-to-noise ratio.

In order to achieve the aforementioned objective, according to one aspect of the present invention, there is provided an adaptive cross correlator apparatus comprising:

first receiving means for receiving a signal and outputting the received signal as a first signal;

second receiving means for receiving a further signal and outputting the received further signal as a second signal, said second receiving means provided at a position different from that of said first receiving means;

first filtering means for filtering the first signal outputted from said first receiving means with a first changeable transfer function and outputting a filtered first signal;

second filtering means for filtering the second signal outputted from said second receiving means with a second changeable transfer function and outputting a filtered second signal;

cross correlator means for calculating a cross correlation value by using a predetermined cross correlation function based on the filtered first signal outputted from said first filtering means and the filtered second signal outputted from said second filtering means; and

adaptive control means for calculating a discriminant function value representing a misclassification measure of the first and second signals, based on the cross correlation value outputted from said cross correlator means and a true delay between the first and second signals, and for adaptively adjusting the first transfer function of said first filtering means and the second transfer function of said second filtering means so that the calculated discriminant function value becomes a minimum.

The above-mentioned adaptive cross correlator apparatus preferably further comprises:

delay calculating means for calculating a delay between the first and second signals, based on the cross correlation value outputted from said cross correlator means, after a process of adaptive control performed by said adaptive control means.

In the above-mentioned adaptive cross correlator apparatus, said adaptive cross correlator apparatus is provided for separating a first speech signal generated by a first sound source and a second speech signal generated by a second sound source, from each other, the first and second speech signals having spectral characteristics different from each other and being generated at locations different from each other,

wherein said adaptive cross correlator apparatus preferably further comprises:

delay means for delaying the filtered first signal outputted from said first filtering means, by a delay amount equal to a delay between said first and second receiving means which is calculated by said delay calculation means when the first speech signal generated by the first sound source is received by said first and second receiving means, and for outputting a delayed signal; and

adding means for adding up the delayed signal outputted from said delay means and the filtered second signal outputted from said second filtering means, and for outputting a signal representing the addition result, thereby outputting an improved first speech signal.

In the above-mentioned adaptive cross correlator apparatus, the discriminant function representing the mis-

classification measure of the first and second signals is preferably a linearly differentiable function, and

wherein said adaptive control means adaptively adjusts the first transfer function of said first filtering means and the second transfer function of said second filtering means by using a gradient descent method so that said calculated discriminant function value becomes a minimum.

In the above-mentioned adaptive cross correlator apparatus, said first and second filtering means are preferably finite impulse filters; and

wherein said adaptive control means adaptively adjusts a filter coefficient of the finite impulse filter of said first filtering means and a filter coefficient of the finite impulse filter of said second filtering means so that said calculated discriminant function value becomes a minimum.

BRIEF DESCRIPTION OF THE DRAWINGS

These and other objects and features of the present invention will become clear from the following description taken in conjunction with the preferred embodiments thereof with reference to the accompanying drawings throughout which like parts are designated by like reference numerals, and in which:

FIG. 1 is a block diagram of an adaptive cross correlator apparatus of a preferred embodiment according to the present invention;

FIG. 2 is a block diagram of a cross correlator apparatus of a prior art example;

FIG. 3 is a block diagram of coefficient changeable type FIR filters 11 and 12 shown in FIG. 1;

FIG. 4 is a block diagram showing an application example of the adaptive cross correlator apparatus shown in FIG. 1 in a training mode;

FIG. 5 is a block diagram showing an application example of the adaptive cross correlator apparatus shown in FIG. 1 in a detection mode;

FIG. 6 is a block diagram showing an arrangement for implementing sound source separation by using the adaptive cross correlator apparatus shown in FIG. 1;

FIG. 7 is a graph showing a spectrum of a noise power used in a simulation of the adaptive cross correlator apparatus shown in FIG. 1;

FIG. 8 is a graph showing a spectrum of a noise-free clean signal power used in the simulation of the adaptive cross correlator apparatus shown in FIG. 1;

FIG. 9 is a graph showing a noisy inputted signal $x_1(t)$ used in the simulation of the adaptive cross correlator apparatus shown in FIG. 1;

FIG. 10 is a graph showing a noisy inputted signal $x_2(t)$ used in the simulation of the adaptive cross correlator apparatus shown in FIG. 1;

FIG. 11 is a graph showing a discriminant function value versus a number of accumulative sampling times (corresponding to elapsed time) when adaptation is allowed in the simulation of the adaptive cross correlator apparatus shown in FIG. 1;

FIG. 12 is a graph showing a discriminant function value versus a number of accumulative sampling times (corresponding to elapsed time) when no adaptation is allowed in the simulation of the adaptive cross correlator apparatus shown in FIG. 1;

FIG. 13 is a graph showing a detected delay $\tau_{estimated}$ versus a number of accumulative sampling times (corresponding to elapsed time) when adaptation is allowed in the simulation of the adaptive cross correlator apparatus shown in FIG. 1;

FIG. 14 is a graph showing a detected delay $\tau_{estimated}$ versus a number of accumulative sampling times (corresponding to elapsed time) when no adaptation is allowed in the simulation of the adaptive cross correlator apparatus shown in FIG. 1;

FIG. 15 is a graph showing a frequency characteristic of transfer functions $H_1(\omega)=H_2(\omega)$ of the FIR filters 11 and 12 shown in FIG. 1, prior to adaptation in the simulation of the adaptive cross correlator apparatus shown in FIG. 1;

FIG. 16 is a graph showing a frequency characteristic of the transfer functions $H_1(\omega)=H_2(\omega)$ of the FIR filters 11 and 12 shown in FIG. 1, after adaptation in the simulation of the adaptive cross correlator apparatus shown in FIG. 1;

FIG. 17 is a graph in which a spectrum of noise power is overlaid on the frequency characteristics of the transfer functions $H_1(\omega)=H_2(\omega)$ of the FIR filters 11 and 12 shown in FIG. 1, after adaptation in the simulation of the adaptive cross correlator apparatus shown in FIG. 1; and

FIG. 18 is a graph in which a spectrum of noise-free clean signal power is overlaid on the frequency characteristics of the transfer functions $H_1(\omega)=H_2(\omega)$ of the FIR filters 11 and 12 shown in FIG. 1, after adaptation in the simulation of the adaptive cross correlator apparatus shown in FIG. 1.

DETAILED DESCRIPTION OF THE PREFERRED EMBODIMENTS

Preferred embodiments according to the present invention will be described below with reference to the attached drawings.

FIG. 1 is a block diagram of an adaptive cross correlator apparatus 100 of a preferred embodiment according to the present invention. The adaptive cross correlator apparatus 100 of the preferred embodiment has both of:

(a) a training mode or a learning mode in which transfer functions $H_1(\omega)$ and $H_2(\omega)$ of coefficient changeable type FIR filters 11 and 12 are adaptively adjusted based on inputted signals $x_1(t)$ and $x_2(t)$ which are generated by the same sound source and are transmitted along different propagation paths, wherein a relative delay occurs therebetween so that the two signals $x_1(t)$ and $x_2(t)$ are different from each other; and

(b) a detection mode in which a delay $\tau_{estimated}$ between two inputted signals $x_1(t)$ and $x_2(t)$ is detected based on those inputted signals $x_1(t)$ and $x_2(t)$.

Referring to FIG. 1, the adaptive cross correlator apparatus 100 of the present preferred embodiment comprises:

(a) coefficient changeable type FIR filters 11 and 12 for filtering the inputted signals $x_1(t)$ and $x_2(t)$, respectively;

(b) a cross correlator 13 for computing or calculating a cross correlation value by performing a calculation of the Equation (1) based on the outputted signals $y_1(t)$ and $y_2(t)$ outputted from the FIR filters 11 and 12;

(c) an adaptive controller 10, which operates in the training mode, for adaptively adjusting the transfer functions $H_1(\omega)$ and $H_2(\omega)$ of the FIR filters 11 and 12, more specifically, for adaptively adjusting filter coefficients of the FIR filters 11 and 12 so as to set those filter coefficients to optimal values based on an outputted signal $Ry_1y_2(\tau, t)$ outputted from the cross correlator 13, so that no error occurs when detecting the time delay within a non-Gaussian noise, that is, a discriminant function value representing a misclassification measure therebetween becomes a minimum value; and

(d) a delay detector **14**, which operates in the detection mode, for detecting and outputting a delay $\tau_{estimated}$ between the inputted signals $x_1(t)$ and $x_2(t)$ based on the outputted signal $Ry_1y_2(\tau, t)$ outputted from the cross correlator **13**.

The adaptive cross correlator apparatus **100** of the present preferred embodiment is characterized in that the apparatus **100** adaptively adjusts the transfer functions $H_1(\omega)$ and $H_2(\omega)$ of the FIR filters **11** and **12** so that an error caused in the delay estimation is minimized. Each pair of inputted signals $x_1(t)$ and $x_2(t)$ is classified by the cross correlator **13** using the delay $\tau_{estimated}$. The delay $\tau_{estimated}$ is expressed by the following Equation (2):

$$\tau_{estimated} = \underset{\tau}{\operatorname{argmax}}\ Ry_1y_2(\tau), \tag{2}$$

where the function "argmax" with respect to τ is a function that represents a value of argument τ at which $Ry_1y_2(\tau)$ becomes a maximum. In the conventional technical field of pattern recognition, $Ry_1y_2(\tau)$ is referred to as a discriminant function for a pair of inputted signals $x_1(t)$ and $x_2(t)$. A pair of inputted signals $x_1(t)$ and $x_2(t)$ can be expressed, for example, by the following Equation (3):

$$x_1(t)=n_1(t)+s(t)\ x_2(t)=n_2(t)+s(t+\tau_{true}) \tag{3}$$

where $n_1(t)$ and $n_2(t)$ are noise signals from noise sources, and s(t) is a signal whose delay τ_{true} which we, inventors try to estimate. When the delay $\tau_{estimated}$ differs from the true delay τ_{true}, namely, when $\tau_{estimated} \neq \tau_{true}$, an estimation error occurs. In the preferred embodiment according to the present invention, a degree of misclassification, namely, a misclassification measure $dx_1,x_2(H_1(\omega), H_2(\omega))$ is introduced to quantify the error in the delay estimation. The misclassification measure $dx_1,x_2(H_1(\omega), H_2(\omega))$ is so set as to be positive when $\tau_{estimated} \neq \tau_{true}$, and the misclassification measure $dx_1, x_2(H_1(\omega), H_2(\omega))$ is so set as to be negative when $\tau_{estimated} = \tau_{true}$. Although there are many possible choices of measure functions for the misclassification measure, the following Equation (4) is preferably provided as the simplest definition:

$$dx_1,x_2(H_1(\omega), H_2(\omega)) = -Ry_1y_2(\tau_{true}) + Ry_1y_2(\tau_{max}) \tag{4}$$

$$\tau_{max} = \underset{\tau \neq \tau_{true}}{\operatorname{argmax}}\ Ry_1y_2(\tau)$$

The function "argmax" in the right side of the second equation of the Equation (4) is a value of argument τ at which the discriminant function value $Ry_1y_2(\tau)$ becomes a maximum when $\tau \neq \tau_{true}$, and is a function that represents a maximum τ_{max} of the argument τ. In order to minimize the number of estimation errors, the respective transfer functions $H_1(\omega)$ and $H_2(\omega)$ of the FIR filters **11** and **12** are adjusted so as to minimize the misclassification measure $dx_1,x_2(H_1(\omega), H_2(\omega))$. This adjustment can be achieved by the gradient descent method in the present preferred embodiment, although any suitable optimization technique such as a simulated annealing could be used theoretically. The cross correlation value is typically expressed in a general form of the cross correlation function, which changes in real time and is a function of time, as shown by the following Equation (5):

$$Ry_1y_2(\tau,t) = \int_{\tau}^{t} y_1(t')y_2(t'-\tau)w(t-t')dt' \tag{5}$$

where w(.) is a window function that has previously been suitably chosen. For example, one possible, preferable choice for the window function w(.) is an exponential function expressed by the following Equation (6):

$$w(t)=e^{-(t/Tc)},\ t \geqq 0 w(t)=0,\ t<0 \tag{6}$$

where T_c is a predetermined window time constant and Tc>0. One simple way of applying such an exponentially decaying window function as shown in the Equation (6) to a discriminant function can be expressed by the following Equation (7):

$$Ry_1y_2(\tau, t)=(1-\alpha)Ry_1y_2(\tau, t-1)+\alpha y_1(t)y_2(t-\tau),\ 0 \leqq \alpha \leqq 1 \tag{7}$$

where α is a forgetting factor, which is directly proportional to the inverse of the window time constant Tc. The time-varying equivalent of the misclassification measure defined in the Equation (4) is expressed by the following Equation (8):

$$dx_1,x_2(H_{t-1,1}(\omega), H_{t-1,2}(\omega)) = -Ry_1y_2(\tau_{true},t) + Ry_1y_2(\tau_{max},t) \tag{8}$$

$$\tau_{max} = \underset{\tau \neq \tau_{true}}{\operatorname{argmax}}\ Ry_1y_2(\tau,t),$$

where "argmax" in the right side of the second equation of the Equation (8) is a value of argument τ at which the discriminant function value $Ry_1y_2(\tau, t)$ becomes a maximum when $\tau \neq \tau_{true}$, and is a function that represents the maximum τ_{max} of the argument τ. The transfer functions $H_{t-1,1}(\omega)$ and $H_{t-1,2}(\omega)$ of the filters **11** and **12** in the Equation (8) are updated at each time "t" using the gradient descent method expressed by the following Equation (9), respectively:

$$\begin{aligned} H_{t,j}(\omega) &= H_{t-1,j}(\omega) - \\ &\quad \eta\{(\partial dx_1,x_2(H_{t-1,1}(\omega),H_{t-1,2}(\omega))/\partial H_{t-1,j}(\omega)\}, \\ j &= 1,2 \end{aligned} \tag{9}$$

where the case of j=1 applies to the FIR filter **11**, the case of j=2 applies to the FIR filter **12**, and η is a training constant that has previously been suitably chosen. In the present preferred embodiment, it is an essential requirement that the misclassification measure $dx_1,x_2(H_{t-1,1}(\omega), H_{t-1,2}(\omega))$ can be linearly partially differentiated with the transfer function $H_{t-1,j}(\omega)$, and the only assumptions made concerning the signal and noise statistics are:

(a) the inputted signals $x_1(t)$ and $x_2(t)$ as well as noise inputted along with the inputted signals $x_1(t)$ and $x_2(t)$ are long term stationary over a time period of the training and detection modes; and

(b) the inputted signals $x_1(t)$ and $x_2(t)$ as well as a noise signal inputted along with the inputted signals arrive from different spatial locations as seen from the input end of the adaptive cross correlator apparatus **100**.

It is noted that the adaptive cross correlator apparatus **100** of the present preferred embodiment is unable to separate a signal and a noise which have been arrived from the same spatial location. Unlike the conventional generalized cross correlator apparatus, neither the evaluation of error-prone coherence nor the computation of error-prone signal-to-

noise ratio is required in the preferred embodiment of the present invention. Indeed no knowledge of either the signal or noise power spectra is required. The transfer functions of the two FIR filters **11** and **12**, or the filter coefficients thereof will simply be adjusted until the transfer functions thereof become the cross correlation function peaks at the true delay. This idea, although embarrassingly simple, is quite effective and useful.

FIG. **3** is a block diagram showing a detailed arrangement of the coefficient changeable type FIR filters **11** and **12** shown in FIG. **1**. The coefficient changeable type FIR filters **11** and **12** are characterized by time-varying filter coefficient vectors, $\vec{w}_{t,1}$ and $\vec{w}_{t,2}$, respectively.

As shown in FIG. **3**, the FIR filters **11** and **12** are so-called acyclic digital filters, and moreover transversal digital filters having a plurality of (M+1) filter coefficients. Each of the FIR filters **11** and **12** comprises:

a plurality of M delay circuits **20-1** to **20-M** connected in cascade with one another;

a plurality of (M+1) amplification degree changeable type amplifiers **21-0** to **21-M** respectively having amplification degrees $w_{t-1,j}(0)$ to $w_{t-1,j}(M)$, each of which can be changed by the adaptive controller **10**; and

a plurality of M adders **22-1** to **22-M** connected in cascade with one another.

In this arrangement, the amplification degrees $w_{t-1,j}(0)$ to $w_{t-1,j}(M)$ respectively become filter coefficients of the FIR filters **11** and **12**. In FIG. **3**, j=1, 2, and FIG. **3** shows the transfer function $H_j(\omega)$ of the FIR filters **11** and **12** at a time "t". That is, FIG. **3** shows a case of the FIR filter **11** when j=1, and shows a case of the FIR filter **12** when j=2.

An inputted signal $x_j(t)$ is inputted to the adder **22-1** via the amplifier **21-0**, and is also inputted to the amplifier **21-M** via a plurality of M delay circuits **20-1** to **20-M** each having a predetermined same delay amount, wherein a plurality of M delay circuits **20-1** to **20-M** is connected in cascade with one another. A signal $x_j(t-1)$ outputted by the delay circuit **20-1** is inputted to the adder **22-1** via the amplifier **21-1**. The adder **22-1** adds up the inputted two signals, and then outputs a signal representing the addition result to the adder **22-2**. Further, a signal $x_j(t-2)$ outputted by the delay circuit **20-2** is inputted to the adder **22-2** via the amplifier **21-2**. The adder **22-2** adds up the inputted two signals, and then outputs a signal representing the addition result to the adder **22-3**. Further, a signal $x_j(t-3)$ outputted from the delay circuit **20-3** is inputted to the adder **22-3** via the amplifier **21-3**. The adder **22-3** adds up the inputted two signals, and then outputs a signal representing the addition result to the adder **22-4**. The following circuit of the FIR filters **11** and **12** are constituted so as to operate in a manner similar to those as described above. Thus, a signal $x_j(t-M)$ outputted by the delay circuit **20-M** is inputted to the adder **22-M** via the amplifier **21-M**. The adder **22-M** adds up the inputted two signals, and then outputs a signal representing the addition result as an outputted signal $y_j(t)$ which is the filtering result.

The misclassification measure $dx_1,x_2(H_{t-1,1}(\omega), H_{t-1,2}(\omega))$ in the Equation (8), for application to the FIR filters **11** and **12** shown in FIG. **3**, can be expressed with the filter coefficient vectors $\vec{w}_{t-1,1}$ and $\vec{w}_{t-1,2}$ at a time "t−1" by the following Equation (10):

$$dx_1,x_2(\vec{w}_{t-1,1}, \vec{w}_{t-1,2}) = -Ry_1y_2(\tau_{true}, t) + Ry_1y_2(\tau_{max}, t) \quad (10)$$

where

$$\tau_{max} = \underset{\tau \neq \tau_{true}}{\operatorname{argmax}} \; Ry_1y_2(\tau,t), \quad (11)$$

$$Ry_1y_2(\tau,t) = (1-\alpha)Ry_1y_2(\tau,t-1) + \alpha y_1(t)y_2(t-\tau),\ 0 \leqq \alpha \leqq 1 \quad (12)$$

$$y_j(t) = \sum_{i=0}^{M} x_j(t-i)w_{t-1,j}(i),\ j = 1,2 \quad (13)$$

$$\vec{w}_{t,j} = [w_{t,j}(0), w_{t,j}(1), \ldots, w_{t,j}(M)],\ j=1, 2 \quad (14)$$

The function "argmax" in the right side of the Equation (11) is a value of argument τ at which the discriminant function value $Ry_1y_2(\tau, t)$ becomes a maximum when $\tau \neq \tau_{true}$, and is a function that represents the maximum τ_{max} of the argument τ. At a time "t+1", the j-th FIR filter **11** or **12** has a plurality of (M+1) filter coefficients $w_{t,j}(i)$. The filter coefficients $w_{t,j}(i)$ (i=0, 1, 2, . . . , M) of the FIR filters **11** and **12** are updated by the adaptive controller **10** at each new inputted sample according to the following Equation (15):

$$w_{t,j}(i) = w_{t-1,j}(i) - \eta\{(\delta dx_1,x_2(\vec{w}_{t-1,1}, \vec{w}_{t-1,2})/\delta w_{t-1,j}(i)\}, \quad (15)$$

$$j = 1,2;$$

$$i = 0,1,2, \ldots, M$$

In the Equation (15), δ in the right side thereof denotes a small displacement of the subsequent quantity thereof.

The constitution and operation of the adaptive cross correlator apparatus **100** shown in FIG. **1** made up by using the above-described principle will be described below.

Referring to FIG. **1**, the inputted signals $x_1(t)$ and $x_2(t)$ are received by the coefficient changeable type FIR filters **11** and **12**, respectively, wherein the FIR filters **11** and **12** are constructed as shown in FIG. **3**. The FIR filter **11**, whose the transfer function or the filter coefficient is set through such adaptive control in the training mode by the adaptive controller **10** that the discriminant function value representing the misclassification measure becomes a minimum, filters the inputted signal $x_1(t)$ with the set transfer function $H_1(\omega)$, and then outputs an outputted filtered signal $y_1(t)$ to the cross correlator **13**. On the other hand, the FIR filter **12** whose the transfer function or the coefficient is set through such adaptive control in the training mode by the adaptive controller **10** that the discriminant function value representing the misclassification measure becomes a minimum, filters the inputted signal $x_2(t)$ with the set transfer function $H_2(\omega)$, and then outputs an outputted filtered signal $y_2(t)$ to the cross correlator **13**. It is to be noted that the initial transfer functions or the initial filter coefficients (or amplification degrees) of the FIR filters **11** and **12** are previously determined appropriately. The cross correlator **13** calculates the cross correlation value $Ry_1y_2(\tau, t)$ using, for example, the Equation (7), and then, outputs a signal representing the calculation result thereof to the adaptive controller **10** via a contact "a" of a switch SW1, and moreover outputs the signal representing the calculation result thereof to the delay detector **14** via a contact "b" of the switch SW1.

The true delay τ_{true} between the inputted signals $x_1(t)$ and $x_2(t)$ required in the training mode is inputted using a keyboard **15**, and then, the true delay τ_{true} is inputted from the keyboard **15** to the adaptive controller **10** via the contact "a" of the switch SW**10**, or from an external apparatus to the adaptive controller **10** via an input terminal **16** and the contact "b" of the switch SW**10**. The adaptive controller **10**, which operates in the training mode, calculates and updates

the filter coefficients $w_{t,j}(i)$ of the FIR filters **11** and **12** using the Equation (15) based on the inputted cross correlation value $Ry_1y_2(\tau, t)$ and the true delay τ_{true} so that the discriminant function value representing the misclassification measure becomes a minimum, and then, outputs the filter coefficients $w_{t,1}(i)$ of the FIR filter **11** to the FIR filter **11** via the contact "a" of the switch SW2, then the filter coefficients $w_{t,1}(i)$ are set and updated as the amplification degrees of the amplifiers **21-0** to **21-M** as shown in FIG. **3**. The adaptive controller **10** also outputs the filter coefficients $w_{t,2}(i)$ of the FIR filter **12** to the FIR filter **12** via the contact "a" of a switch SW3, then the filter coefficients $w_{t,2}(i)$ are set and updated as the amplification degrees of the amplifiers **21-0** to **21-M** as shown in FIG. **3**. In this case, each of the switches SW1, SW2 and SW10 are switched to the contact "a" side thereof for the training mode, while they are switched to the contact "b" side thereof for the detection mode. Further, the delay detector **14**, which operates in the detection mode, calculates the delay τ_{max} by using the Equation (11) based on the inputted cross correlation value $Ry_1y_2(\tau, t)$, and then outputs the calculation result thereof as a detected delay $\tau_{estimated}$.

In addition, the FIR filters **11** and **12**, the cross correlator **13**, the adaptive controller **10** and the delay detector **14** of the adaptive cross correlator apparatus **100** are constituted by, for example, electrical digital computers.

Next, a first application example for delay detection by using the adaptive cross correlator apparatus **100** of the present preferred embodiment is described with reference to FIGS. **4** and **5**.

Referring to FIG. **4**, the adaptive cross correlator apparatus **100** comprises two microphones **41** and **51** which serve as speech signal receiving means and are located a predetermined distance away from each other, and two amplifiers **42** and **52**. A signal inputted to the microphone **41** is inputted to the adaptive cross correlator apparatus **100** via the amplifier **42** as an inputted signal $x_1(t)$. On the other hand, a signal inputted to the microphone **51** is inputted to the adaptive cross correlator apparatus **100** via the amplifier **52** as an inputted signal $x_2(t)$. Further, a plurality of N loudspeakers **30-1** to **30-N** are provided at known predetermined locations away from the microphones **41** and **51** on a side opposed to the microphones **41** and **51**, while a plurality of M non-Gaussian noise sources **31-1** and **31-M** each of which generates a non-Gaussian noise signal are provided in positions having a random relationship. A speech signal generator **32** generates a speech signal having a predetermined audio frequency, and then outputs the speech signal selectively to any one of the loudspeakers **30-1** to **30-N** via a switch SW11, so that the speech signal is generated and outputted from one of the loudspeakers **30-1** to **30-N** toward the microphones **41** and **51**. A look-up table ROM **34** stores a true delay τ_{true} between two speech signals when the two signals are generated by any one of the loudspeakers **30-1** to **30-N** and have arrived at the microphones **41** and **51**. In the preferred embodiment, the true delays τ_{true} are previously measured and are stored in the look-up table ROM **34** in correspondence to the respective loudspeakers **30-1** to **30-N**. A sound source selection controller **33** switches over the switch SW11 sequentially and selectively in a predetermined period so that speech signal outputted from the speech signal generator **32** are outputted to one of the respective loudspeakers **30-1** to **30-N** sequentially and selectively. The sound source selection controller **33** also outputs address data to the look-up table ROM **34** so that the true delays τ_{true} corresponding to the respective loudspeakers **30-1** to **30-N** are sequentially inputted from the look-up table ROM **34** to the adaptive controller **10** via the input terminal **16**. It is noted that the speech signals outputted from all the loudspeakers **30-1** to **30-N** are those having the same spectral characteristics.

In the training mode of the first application example of the preferred embodiment, the adaptive cross correlator apparatus **100** is set to the training mode, and the switches SW1, SW2 and SW3 are switched over to the contact "a" side thereof. Further, the transfer functions $H_1(\omega)$ and $H_2(\omega)$ of the FIR filters **11** and **12** are appropriately initialized, and are determined randomly or heuristically so as to set predetermined ones. In the training mode, two signals are generated from known locations. It is necessary that the locations of all the loudspeakers **30-1** to **30-N** used in the training mode and true delays τ_{true} corresponding to the locations of these loudspeakers **30-1** to **30-N** are previously known. The sound source selection controller **33** switches the switch SW11 sequentially and selectively in a predetermined period so that speech signals outputted from the speech signal generator **32** are outputted sequentially and selectively to the loudspeakers **30-1** to **30-N**, while the true delays τ_{true} corresponding to the loudspeakers **30-1** to **30-N** are inputted from the look-up table ROM **34** to the adaptive controller **10** via the input terminal **16**. Thus, the process of the training of the adaptive cross correlator apparatus **100** is performed and the adaptive controller **10** of the adaptive cross correlator apparatus **100** slowly performs the adaptive control until the transfer functions $H_1(\omega)$ and $H_2(\omega)$ of the FIR filters **11** and **12** or the filter coefficients which are the amplification degrees of the amplifiers **21-0** to **21-M** shown in FIG. **3**, are updated and have been finally converged, or until the discriminant function drops below a predetermined threshold value, so that the discriminant function representing the misclassification measure is minimized. Then, when the adaptive control is completed, the respective transfer functions $H_1(\omega)$ and $H_2(\omega)$ of the two FIR filters **11** and **12** are fixed and set.

In the subsequent detection mode, the switches SW1, SW2 and SW3 of the adaptive cross correlator apparatus **100** are switched over to the contact "b" side thereof. Further, low-frequency signals such as speech signals each having the same spectral characteristic as those used in the training mode are generated from the same range of locations of the loudspeakers **30-1** to **30-N**, wherein the positions of the loudspeakers **30-1** to **30-N** are estimated by using the adaptive cross correlator apparatus **100**. More specifically, as shown in FIG. **5**, the adaptive cross correlator apparatus **100** is set to the detection mode while noise sources **31-1** to **31-M** are placed still as they are. In this state, for example, a loudspeaker **30-Z** is placed at the same location as that of the loudspeaker **30-3**, and then, a speech signal is generated by the loudspeaker **30-Z** by using the speech signal generator **32** which generates the same speech signal as that of the training mode, then the adaptive cross correlator apparatus **100** detects and outputs a delay $\tau_{estimated}$. By comparing the detected delay $\tau_{estimated}$ with the true delay τ_{true}, the position of the loudspeaker **30-Z** can be detected.

Further, a second application example for sound source separation using the adaptive cross correlator apparatus **100** of the present preferred embodiment is described with reference to FIG. **6**. This second application example is directed to such a case that, for example, there are two persons in a room, and both persons are speaking at the same time or we wish to listen to any one person.

As shown in FIG. **6**, the adaptive cross correlator apparatus **100** comprises two microphones **41** and **51** located a predetermined distance away from each other, and two

amplifiers **42** and **52**, in a manner similar to that of the first application example. Further, two loudspeakers **61** and **62** are provided at predetermined locations on a side opposed to the microphones **41** and **51**, wherein the loudspeaker **61** is located at a known position. Speech signal generators **71** and **72** generate speech signals of predetermined audio frequencies having different spectral characteristics from each other, respectively, and respectively output and generate the speech signals to the loudspeakers **61** and **62** toward the two microphones **41** and **42**. It is noted that the sound sources of sound generation by the loudspeakers **61** and **62** are hereinafter referred to as a first sound source and a second sound source, respectively. Further, a filtered signal $y_1(t)$ outputted from the FIR filter **11** of the adaptive cross correlator apparatus **100** is inputted to an adder **82** via a delay circuit **81**, while a filtered signal $y_2(t)$ outputted from the FIR filter **12** is inputted directly to the adder **82** directly as it is. The adder **82** adds up the two inputted signals, and then, outputs a signal representing the addition result.

The adaptive cross correlator apparatus **100**, which is set to the training mode, previously measures a delay τ_1 between the inputted signals $x_1(t)$ and $x_2(t)$ with respect to a speech signal of the first sound source generated by the loudspeaker **61**, and the measured delay τ_1 is set to the adaptive controller **10** as a true delay τ_{true}. At the same time, a delay of the delay circuit **81** is inputted to the adaptive controller **10** via the input terminal **16** as the delay τ_1 of the speech signal of the first sound source. Then, the adaptive cross correlator apparatus **100** is made to operate in the training mode, then the adder **82** adds up the signal $y_1(t+1)$ and the signal $y_2(t)$. As a result, the speech signal of the first sound source outputted from the loudspeaker **61** is combined or synthesized in phase. Thus, a speech signal in which the speech signal of the first sound source is dominant can be obtained.

Results of simulations using the adaptive cross correlator apparatus **100** of the present preferred embodiment will be described below. The following preliminary simulations were conducted to demonstrate the ability of the adaptive cross correlator apparatus **100** in order to extract a spectral characteristic of a clean signal from a noisy background. Normally we would expect to train the adaptive cross correlator apparatus **100** with an ensemble of noisy signals generated at various locations, however, here we use just a single noisy signal generated from a single location. Spectrums of a noise power and a noise-free clean signal power which are used for this simulation in a frequency range from 0 Hz to 5 kHz are shown in FIGS. **7** and **8**, respectively. The noisy inputted signals $x_1(n)$ and $x_2(n)$ are defined, for example, as the following Equation (16):

$$x_1(n)=\text{noise}(n)+\text{signal}(n)\quad x_2(n)=\text{noise}(n)+\text{signal}(n+4) \tag{16}$$

where n is a natural number and a number of accumulative sampling times (corresponding to elapsed time), which is ranged in $0 \leqq n \leqq 10000$, noise(n) is a non-Gaussian noise component in the n-th sample, and signal(n) is the signal component in the n-th sample. The above noisy inputted signals $x_1(n)$ and $x_2(n)$ are shown in FIGS. **9** and **10**, respectively.

The only information provided to the adaptive cross correlator apparatus **100** of the present preferred embodiment is that the noise-free clean signal has a delay of four samples. It is noted that the noise was set so as to have a delay of zero in the present simulation, although it has not been mentioned in the present preferred embodiment. In the present simulation, the FIR filters **11** and **12** had transfer functions $H_1(\omega)$ and $H_2(\omega)$, respectively, and were chosen so that the two FIR filters **11** and **12** would be symmetric FIR filters having 21 coefficients. It is to be noted that both FIR filters **11** and **12** were initialized so as to be the same filters having identical filter coefficients. In addition, the present invention is not limited to this, and the two FIR filters **11** and **12** may also be asymmetric filters. After performing a small amount of simulation, the training factor η was set to 0.00001 and the running cross correlation forgetting factor α was set to 1/500. The range of possible delays was restricted to between −10 and 10.

Then, two simulations are performed. In the first simulation, no adaptation of the transfer functions $H_1(\omega)$ and $H_2(\omega)$ of the FIR filters **11** and **12** is allowed, and the delay is estimated over the signal duration. As can be seen in FIG. **13**, the estimated delay is that of the noise, that is, is substantially equal to zero and not a delay of the signal. The reason thereof is that the noise energy is significantly larger than the signal energy. The value of the discriminant function $d(\vec{w}_{t,1}, \vec{w}_{t,2})$ and the value of the delay $\tau_{estimated}$ prior to the adaptation of the transfer functions $H_1(\omega)$ and $H_2(\omega)$ of the FIR filters **11** and **12** are shown in FIGS. **11** and **13**, respectively. The second simulation is identical to the first simulation, except that the transfer functions $H_1(\omega)$ and $H_2(\omega)$ are not adapted.

The delay $\tau_{estimated}$ and the discriminant function value $d(\vec{w}_{t,1}, \vec{w}_{t,2})$ detected as results of the adaptation are shown in FIGS. **12** and **14**, respectively. As can be understood from these drawings, the transfer functions $H_1(\omega)$ and $H_2(\omega)$ after about 3000 samples have successfully adapted so as to cancel the majority of the noise, and the resulting delay estimates $\tau_{estimated}$ were close to the true signal delay, that is, approximate to 4. The transfer functions $H_1(\omega)$ and $H_2(\omega)$ after adaptation to the two FIR filters **11** and **12** were identical as expected, since the noise was the same in both inputted signals $x_1(t)$ and $x_2(t)$. However, under more general conditions that the noises differ between the inputted signals $x_1(t)$ and $x_2(t)$, the transfer functions $H_1(\omega)$ and $H_2(\omega)$ would then differ from each other.

The transfer functions $H_1(\omega)=H_2(\omega)$ before and after adaptation are shown in FIGS. **15** and **16**, respectively. FIGS. **17** and **18** show the transfer functions $H_1(\omega)=H_2(\omega)$ after adaptation overlaid onto the spectrum of the signal and noise, respectively. The plots of these drawings clearly show that both FIR filters **11** and **12** have been adapted to attenuate the noisy part of the spectrum with successful results. In other words, the transfer functions $H_1(\omega)=H_2(\omega)$ after adaptation have been adapted in such a way that the noise power is removed but the signal power is passed.

It could be considered that these and several similarly successful preliminary simulations are sufficient to demonstrate the advantages of the method of the present invention.

As described above, we, inventors have invented a new type of adaptive filter based on the concept of minimizing a suitably defined discriminant function. Potential applications include time delay estimation as described above and speaker separation (the infamous cocktail party effect).

As described above, according to the preferred embodiment of the present invention, the respective transfer functions $H_1(\omega)$ and $H_2(\omega)$ of the FIR filters **11** and **12** are adaptively controlled or adjusted based on the discriminant function value outputted from the cross correlator **13** so that the discriminant function value representing the misclassification measure becomes a minimum. Therefore, the respective transfer functions $H_1(\omega)$ and $H_2(\omega)$ of the FIR filters **11** and **12** can be adaptively controlled or adjusted so that no errors will occur in detecting the time delay in non-Gaussian noise. Accordingly, it is possible to perform

the estimation of time delay between two inputted signals as well as the speaker separation, with less errors compared with that of the prior art. Further, it is unnecessary to compute the signal-to-noise power ratio.

In the above-described preferred embodiment, coefficient changeable type FIR filters **11** and **12** have been used. However, the present invention is not limited to this, and there may be used other various filters having transfer functions which can be changed by an external circuit or apparatus.

According to the preferred embodiment of the present invention, the respective first and second transfer functions of the first and second filtering means can be adaptively controlled or adjusted more correctly in detecting and estimating the time delay in non-Gaussian noise with less errors compared with the prior art. Further, it is unnecessary to compute or calculate the signal-to-noise power ratio.

According to the preferred embodiment of the present invention, the delay between the first inputted signal and the second inputted signal with respect to one signal can be calculated more correctly even within a non-Gaussian noise with less errors compared with that of the prior art.

According to the preferred embodiment of the present invention, the first speech signal generated and outputted from the first sound source can be combined or synthesized in phase by the adding means, so that a signal in which the first speech signal generated and outputted from the first sound source is dominant can be obtained. Thus, the first speech signal generated and outputted from the first sound source can be separated from the second speech signal generated and outputted from the second sound source more correctly.

According to the present preferred embodiment of the present invention, the first transfer function of the first filtering means and the second transfer function of the second filtering means can be adaptively controlled or adjusted more simply as compared with that of the prior art.

According to the present preferred embodiment of the present invention, the first transfer function of the first filtering means and the second transfer function of the Second filtering means can be adaptively controlled or adjusted more simply as compared with .that of the prior art.

Although the present invention has been fully described in connection with the preferred embodiments thereof with reference to the accompanying drawings, it is to be noted that various changes and modifications are apparent to those skilled in the art. Such changes and modifications are to be understood as included within the scope of the present invention as defined by the appended claims unless they depart therefrom.

What is claimed is:

1. An adaptive cross correlator apparatus comprising:

first receiving means for receiving a signal and outputting the received signal as a first signal;

second receiving means for receiving a further signal and outputting the received further signal as a second signal, said second receiving means provided at a position different from that of said first receiving means;

first filtering means for filtering the first signal outputted from said first receiving means with a first changeable transfer function and outputting a filtered first signal;

second filtering means for filtering the second signal outputted from said second receiving means with a second changeable transfer function and outputting a filtered second signal;

cross correlator means for calculating a cross correlation value by using a predetermined cross correlation function based on the filtered first signal outputted from said first filtering means and the filtered second signal outputted from said second filtering means; and

adaptive control means for calculating a discriminant function value representing a misclassification measure of the first and second signals, based on the cross correlation value outputted from said cross correlator means and a true delay between the first and second signals, and for adaptively adjusting the first transfer function of said first filtering means and the second transfer function of said second filtering means so that the calculated discriminant function value becomes a minimum.

2. The adaptive cross correlator apparatus as claimed in claim **1**, further comprising:

delay calculating means for calculating a delay between the first and second signals, based on the cross correlation value outputted from said cross correlator means, after a process of adaptive control performed by said adaptive control means.

3. The adaptive cross correlator apparatus as claimed in claim **2**, said adaptive cross correlator apparatus provided for separating a first speech signal generated by a first sound source and a second speech signal generated by a second sound source, from each other, the first and second speech signals having spectral characteristics different from each other and being generated at locations different from each other, said adaptive cross correlator apparatus further comprising:

delay means for delaying the filtered first signal outputted from said first filtering means, by a delay amount equal to a delay between said first and second receiving means which is calculated by said delay calculation means when the first speech signal generated by the first sound source is received by said first and second receiving means, and for outputting a delayed signal; and

adding means for adding up the delayed signal outputted from said delay means and the filtered second signal outputted from said second filtering means, and for outputting a signal representing the addition result, thereby outputting an improved first speech signal.

4. The adaptive cross correlator apparatus as claimed in claim **1**,

wherein the discriminant function representing the misclassification measure of the first and second signals is a linearly differentiable function, and

wherein said adaptive control means adaptively adjusts the first transfer function of said first filtering means and the second transfer function of said second filtering means by using a gradient descent method so that said calculated discriminant function value becomes a minimum.

5. The adaptive cross correlator apparatus as claimed in claim **2**,

wherein the discriminant function representing the misclassification measure of the first and second signals is a linearly differentiable function, and

wherein said adaptive control means adaptively adjusts the first transfer function of said first filtering means and the second transfer function of said second filtering means by using a gradient descent method so that said calculated discriminant function value becomes a minimum.

6. The adaptive cross correlator apparatus as claimed in claim 3,

wherein the discriminant function representing the misclassification measure of the first and second signals is a linearly differentiable function, and

wherein said adaptive control means adaptively adjusts the first transfer function of said first filtering means and the second transfer function of said second filtering means by using a gradient descent method so that said calculated discriminant function value becomes a minimum.

7. The adaptive cross correlator apparatus as claimed in claim 1,

wherein said first and second filtering means are finite impulse filters; and

wherein said adaptive control means adaptively adjusts a filter coefficient of the finite impulse filter of said first filtering means and a filter coefficient of the finite impulse filter of said second filtering means so that said calculated discriminant function value becomes a minimum.

8. The adaptive cross correlator apparatus as claimed in claim 2,

wherein said first and second filtering means are finite impulse filters; and

wherein said adaptive control means adaptively adjusts a filter coefficient of the finite impulse filter of said first filtering means and a filter coefficient of the finite impulse filter of said second filtering means so that said calculated discriminant function value becomes a minimum.

9. The adaptive cross correlator apparatus as claimed in claim 3,

wherein said first and second filtering means are finite impulse filters; and

wherein said adaptive control means adaptively adjusts a filter coefficient of the finite impulse filter of said first filtering means and a filter coefficient of the finite impulse filter of said second filtering means so that said calculated discriminant function value becomes a minimum.

10. The adaptive cross correlator apparatus as claimed in claim 4,

wherein said first and second filtering means are finite impulse filters; and

wherein said adaptive control means adaptively adjusts a filter coefficient of the finite impulse filter of said first filtering means and a filter coefficient of the finite impulse filter of said second filtering means so that said calculated discriminant function value becomes a minimum.

* * * * *