IN THE UNITED STATES PATENT AND TRADEMARK OFFICE

In re Patent of:	Gregory G. Raleigh, et al.	
U.S. Patent No.:	9,143,976	Attorney Docket No.: 39843-0158IP1
Issue Date:	September 22, 2015	
Appl. Serial No.:	14/676,704	
Filing Date:	April 1, 2015	
Title:	WIRELESS END-USER DEVICE WITH DIFFERENTIATED NETWORK ACCESS AND ACCESS STATUS FOR BACKGROUND AND FOREGROUND DEVICE APPLICATIONS	

Mail Stop Patent Board
Patent Trial and Appeal Board
U.S. Patent and Trademark Office
P.O. Box 1450
Alexandria, VA 22313-1450

PETITION FOR *INTER PARTES* REVIEW OF UNITED STATES PATENT NO. 9,143,976 PURSUANT TO 35 U.S.C. §§ 311–319, 37 C.F.R. § 42

TABLE OF CONTENTS

I. REQUIREMENTS FOR IPR 1
- **A.** Grounds for Standing 1
- **B.** Challenge and Relief Requested 1
- **C.** Claim Construction 2

II. THE '976 PATENT 3
- **A.** Overview 3
- **B.** Prosecution History 4

III. THE CHALLENGED CLAIMS ARE UNPATENTABLE 4
- **A.** [GROUND 1A] – Rao-Oestvall Renders Claims 1-4, 8-10, 13, 14, 16, 18-20, 25, 27, and 28 Obvious 4
  - 1. Rao-Oestvall 4
  - 2. Analysis 16
- **B.** [GROUND 1B] – Rao-Oestvall-Montemurro Renders Claims 5-7, 11, 17, 18, 23, 24, 26, and 29 Obvious 46
  - 1. Rao-Oestvall-Montemurro 46
  - 2. Analysis 50
- **C.** [GROUND 1C] – Rao-Oestvall-Araujo Renders Claims 12, 15, 21, and 22 Obvious 63
  - 1. Rao-Oestvall-Araujo 63
  - 2. Analysis 69

IV. PTAB DISCRETION SHOULD NOT PRECLUDE INSTITUTION 74
- **A.** 35 U.S.C. § 325(d) 74
- **B.** 35 U.S.C. §314(a) 75

V. CONCLUSION AND FEES 77

VI. MANDATORY NOTICES UNDER 37 C.F.R § 42.8(a)(1) 77
- **A.** Real Party-In-Interest Under 37 C.F.R. § 42.8(b)(1) 77
- **B.** Related Matters Under 37 C.F.R. § 42.8(b)(2) 77
- **C.** Lead And Back-Up Counsel Under 37 C.F.R. § 42.8(b)(3) 77
- **D.** Service Information 78

Headwater Ex. 2001
Samsung v. Headwater
IPR2023-01362

EXHIBITS

SAMSUNG-1001	U.S. Patent No. 9,143,976 to Raleigh, et al. ("the '976 Patent")
SAMSUNG-1002	Excerpts from the Prosecution History of the '976 Patent ("the Prosecution History")
SAMSUNG-1003	Declaration and Curriculum Vitae of Dr. Kevin Butler
SAMSUNG-1004	Complaint, *Headwater Research LLC v. Samsung Electronics Co., Ltd. et al.*, 2:22-cv-00422, E.D. Tex., October 26, 2022
SAMSUNG-1005	U.S. Pat. App. Pub. No. 2006/0039354 ("Rao")
SAMSUNG-1006	U.S. Pat. App. Pub. No. 2007/0038763 ("Oestvall")
SAMSUNG-1007	U.S. Pat. App. Pub. No. 2009/0207817 ("Montemurro")
SAMSUNG-1008	RESERVED
SAMSUNG-1009	U.S. Pat. App. Pub. No. 2008/0080458 ("Cole")
SAMSUNG-1010	U.S. Pat. No. 5,987,611 ("Freund")
SAMSUNG-1011	U.S. Pat. App. Pub. No. 2009/0217065 ("Araujo")
SAMSUNG-1012	U.S. Pat. App. Pub. No. 2010/0115048 ("Scahill")
SAMSUNG-1013	U.S. Pat. No. 8,381,127 ("Singh")
SAMSUNG-1014	U.S. Pat. App. Pub. No. 2007/0173283A1 ("Livet")
SAMSUNG-1015	U.S. Pat. No. 8,413,172 ("Sng")
SAMSUNG-1016	Flinn, Jason, et al. "The case for intentional networking," Proceedings of the 10th Workshop on Mobile Computing Systems and Applications, 2009 ("Flinn")

Headwater Ex. 2001
Samsung v. Headwater
IPR2023-01362

SAMSUNG-1017	Carter, Casey et al., "Contact networking: a localized mobility system," Proceedings of the 1st International Conference on Mobile systems, Applications and Services, 2003 ("Carter")
SAMSUNG-1018	U.S. Pat. No. 8,407,345 to Lim ("Lim")
SAMSUNG-1019	U.S. Pat. App. Pub. No. 2009/0019022 to Schallert ("Schallert")
SAMSUNG-1020	David Flanagan, O'Reilly & Associates, Inc., "Java in a Nutshell," 1996, ISBN: I-56592-183-6
SAMSUNG-1021	Richard Stevens et al., "UNIX Network Programming Volume 1, Third Edition: The Sockets Networking API," 2004, ISBN: 0-13-141155-1
SAMSUNG-1022	U.S. Pat. App. Pub. No. 2009/0093247 to Srinivasan ("Srinivasan")
SAMSUNG-1023	U.S. Pat. App. Pub. No. 2008/0311897 to Segal ("Segal")
SAMSUNG-1024	Buxton, B., "Integrating the Periphery and Context: A New Model of Telematics," in *Proceedings of Graphics Interface '95*, in GI'95. 1995
SAMSUNG-1025	Hinckley et al., "Foreground and background interaction with sensor-enhanced mobile devices," *ACM Trans. Comput. Hum. Interact.*, vol. 12, no. 1, pp. 31–52, Mar. 2005
SAMSUNG-1026	International Publication No. WO 03/100581 to Dive-Reclus ("Dive-Reclus")
SAMSUNG-1027-SAMSUNG-1029	RESERVED
SAMSUNG-1030	First Amended Docket Control Order, *Headwater Research LLC v. Samsung Electronics Co., Ltd. et al.*, 2:22-cv-00422, E.D. Tex., April 21, 2023

Headwater Ex. 2001
Samsung v. Headwater
IPR2023-01362

SAMSUNG-1031	Memorandum, Interim Procedure for Discretionary Denials in AIA Post-Grant Proceedings with Parallel District Court Litigation (USPTO June 21, 2022) ("Director's Guidance")
SAMSUNG-1032	Samsung Stipulation letter regarding IPR grounds in District court litigation
SAMSUNG-1033	First Amended Complaint, *Headwater Research LLC v. Samsung Electronics Co., Ltd. et al.*, 2:22-cv-00422, E.D. Tex., November 30, 2022

Headwater Ex. 2001
Samsung v. Headwater
IPR2023-01362

LISTING OF CHALLENGED CLAIMS

Claim	Identifier	Claim Language
1	[1.1]	A wireless end-user device, comprising:
	[1.2]	a wireless wide area network (WWAN) modem to communicate data for Internet service activities between the device and at least one WWAN, when configured for and connected to the WWAN;
	[1.3]	a wireless local area network (WLAN) modem to communicate data for Internet service activities between the device and at least one WLAN, when configured for and connected to the WLAN;
	[1.4]	a device display;
	[1.5]	one or more processors configured to
	[1.6]	classify, for a first end-user application capable of interacting in the device display foreground with a user and capable of at least some Internet service activity when not interacting in the device display foreground with the user, whether or not the first end-user application, when running, is interacting in the device display foreground with the user,
	[1.7]	for a time period when data for Internet service activities is communicated through a WWAN modem connection to the at least one WWAN, apply a first differential traffic control policy to Internet service activity on behalf of the first end-user application, such that Internet service activity on behalf of the first end-user application is disallowed when the one or more processors classify the first end-user application as not interacting in the device display foreground with the user, and
	[1.8(a)]	indicate to the first end-user application, via an application program interface (API), one or more network access conditions based on the applied first differential traffic control policy,
	[1.8(b)]	including a first network access condition that indicates

Headwater Ex. 2001
Samsung v. Headwater
IPR2023-01362

Claim	Identifier	Claim Language
		the unavailability to the first end-user application, when the first end-user application is classified as not interacting in the device display foreground with the user, of Internet data service that is available via the WWAN modem, and
	[1.8(c)]	a second network access condition that indicates the availability to the first end-user application, when the first end-user application is classified as interacting in the device display foreground with the user, of Internet data service that is available via the WWAN modem.
2	[2]	The wireless end-user device of claim 1, wherein the one or more processors are configured to classify that the first end-user application is not interacting in the device display foreground with the user when the user of the device is not directly interacting with that application or perceiving any benefit from that application.
3	[3]	The wireless end-user device of claim 1, further comprising a user interface to provide the user of the device with information regarding why the first differential traffic control policy is applied to the first end-user application.
4	[4]	The wireless end-user device of claim 1, further comprising a user interface to inform the user of the device when there are options to set, control, override, or modify service usage controls that affect the first differential traffic control policy.
5	[5]	The wireless end-user device of claim 1, wherein the first differential traffic control policy is part of a multimode profile having different policies for different networks.
6	[6]	The wireless end-user device of claim 5, wherein the one or more processors are further configured to select a traffic control policy from the multimode profile based at least in part on the type of network connection currently in use by the device.

Claim	Identifier	Claim Language
7	[7]	The wireless end-user device of claim 6, wherein the one or more processors are further configured to, when the type of network connection is at least one type of WLAN connection, select a traffic control policy from the multimode profile based at least in part on a type of network connection from the WLAN to the Internet.
8	[8.1]	The wireless end-user device of claim 1, wherein the one or more processors are further configured to classify whether a second end-user application is interacting in the device display foreground with the user,
	[8.2]	apply a second differential traffic control policy to Internet service activity on behalf of the second end-user application, and
	[8.3]	indicate to the second end-user application, via the API, one or more network access conditions based on the applied second differential traffic control policy.
9	[9]	The wireless end-user device of claim 1, further comprising a network stack interface integrated with the API.
10	[10]	The wireless end-user device of claim 1, further comprising a networking stack, wherein the one or more processors are further configured to, at an application service interface layer, identify application traffic flows prior to the flows entering the networking stack.
11	[11]	The wireless end-user device of claim 1, wherein the one or more processors apply the first differential traffic control policy to one of but not both of a connection to a roaming WWAN network and a connection to a home WWAN network.
12	[12]	The wireless end-user device of claim 1, wherein the one or more processors are further configured to dynamically change the application of the first differential traffic control policy based on a power state of the device.
13	[13]	The wireless end-user device of claim 1, wherein the

Claim	Identifier	Claim Language
		one or more processors are further configured to dynamically change the application of the first differential traffic control policy based on a device usage state.
14	[14]	The wireless end-user device of claim 1, wherein the one or more processors configured to classify whether or not the first end-user application, when running, in interacting in the device display foreground with a user perform the classification based at least in part on a state of user interface priority for the application.
15	[15]	The wireless end-user device of claim 1, wherein the one or more processors are further configured to dynamically change the application of the first differential traffic control policy based on power control state changes for one or more of the modems.
16	[16]	The wireless end-user device of claim 1, wherein the one or more processors are configured to associate the first end-user application with the first differential traffic control policy based on an application behavior.
17	[17]	The wireless end-user device of claim 1, wherein the differential traffic control policy defines that applications to which the policy applies can only have WWAN network access events during particular time windows.
18	[18]	The wireless end-user device of claim 1, wherein the one or more processors are further configured to update the first differential traffic control policy based on information received from a network element.
19	[19]	The wireless end-user device of claim 1, further comprising an agent to block, modify, remove, or replace, based on the applied differential traffic control policy, user interface messages generated by the first end-user application.
20	[20]	The wireless end-user device of claim 1, wherein the one or more processors configured to apply the first

Claim	Identifier	Claim Language
		differential traffic control policy to disallow Internet service activity on behalf of the first end-user application perform a disallowance of Internet service activity by intercepting open, connect, and/or write requests by the first end-user application to a network stack.
21	[21]	The wireless end-user device of claim 20, wherein the API responds to an intercepted request by the first end-user application by emulating network messaging.
22	[22]	The wireless end-user device of claim 21, wherein emulating network messaging comprises responding to a network request from the first end-user application by blocking the request from passing to a network stack and returning to the first end-user application a message indicating the network request was not successful.
23	[23]	The wireless end-user device of claim 1, the first differential traffic control policy comprising first and second sub-policies applicable respectively to Internet data service provided using the WWAN modem to connect to a home WWAN and a roaming WWAN, wherein the one or more processors are further configured to apply the first sub-policy when Internet data service is provided through a home WWAN and to apply the second sub-policy when Internet data service is provided through a roaming WWAN.
24	[24]	The wireless end-user device of claim 1, the first differential traffic control policy comprising first, second, and third sub-policies applicable respectively to Internet data service provided using the WWAN modem and three different network types from the network types consisting of 2G, 3G, 4G, home, and roaming.
25	[25]	The wireless end-user device of claim 1, wherein the API comprises a network access API.
26	[26]	The wireless end-user device of claim 1, wherein the one or more network access conditions indicated via the API to the first end-user application comprises

Claim	Identifier	Claim Language
		information on whether a current connected WWAN is a roaming network or a non-roaming network.
27	[27]	The wireless end-user device of claim 1, wherein the API informs the first end-user application when it is allowed to access Internet data service that is available via the WWAN modem.
28	[28]	The wireless end-user device of claim 1, wherein the API informs the first end-user application of one or more network traffic controls that the first end-user application is expected to implement.
29	[29]	The wireless end-user device of claim 1, wherein the API instructs the first end-user particular application to transition to a different state.

Samsung Electronics Co., Ltd. ("Petitioner" or "Samsung") petitions for *Inter Partes* Review ("IPR") of claims 1-29 ("the Challenged Claims") of U.S. Patent No. 9,143,976 ("the '976 patent").

I. REQUIREMENTS FOR IPR

A. Grounds for Standing

Samsung certifies that the '976 patent is available for IPR. Samsung is not barred or estopped from requesting this review. Samsung was served with a complaint of infringement of the '976 patent less than one year ago. SAMSUNG-1004.

B. Challenge and Relief Requested

Samsung requests an IPR of the Challenged Claims on the grounds below, supported by a declaration from Dr. Kevin Butler. SAMSUNG-1003, ¶¶15, 28-31, 36.

Ground	Claim(s)	35 U.S.C. § 103
1A[1]	1-4, 8-10, 13, 14, 16, 19,	Rao, Oestvall

[1] This Petition refers to Araujo for additional support for features of claim 1 (among others). This table refers to Rao-Oestvall, but the grounds would apply equally if additional support from Araujo is leveraged and Rao-Oestvall is replaced with Rao-Oestvall-Araujo for Grounds 1A and 1B.

Headwater Ex. 2001
Samsung v. Headwater
IPR2023-01362

Ground	Claim(s)	35 U.S.C. § 103
	20, 25, 27, 28	
1B	5-7, 11, 17, 18, 23, 24, 26, 29	Rao, Oestvall, Montemurro
1C	12, 15, 21, 22	Rao, Oestvall, Araujo

The ’976 patent claims priority to a number of provisional applications, the earliest of which was filed 01/28/2009. SAMSUNG-1001, Cover. While Samsung does not concede that the ’976 patent is entitled to the 01/28/2009 date, each of the applied references qualifies as prior art (table below) to the 01/28/2009 date.

Reference	Filing Date	Publication Date
Rao	7/22/2005	2/23/2006
Oestvall	5/30/2006	2/15/2007
Montemurro	2/15/2008	8/20/2009
Araujo	2/26/2008	8/27/2009

C. Claim Construction

No formal claim constructions are necessary because “claim terms need only be construed to the extent necessary to resolve the controversy.” *Wellman, Inc. v. Eastman Chem. Co.*, 642 F.3d 1355, 1361 (Fed. Cir. 2011). Samsung reserves the right to respond to any constructions offered by Headwater or adopted by the Board. Samsung is not conceding that each challenged claim satisfies all statutory

requirements, nor is Samsung waiving any arguments concerning claim scope or grounds that can only be raised in district court. For this Petition, Samsung applies prior art in a manner consistent with Headwater's allegations of infringement before the district court.

II. THE '976 PATENT

A. Overview

The '976 patent describes "a wireless end-user device that has wireless wide-area network (WWAN) and wireless local-area network (WLAN) modems." SAMSUNG-1001, Abstract. A system "analyzes traffic from [a] network service consuming application," and "categorize[s] the traffic" based on various criteria, such as "network type, time of day, connection cost, whether home or roaming, network busy state, QoS, and whether the particular service usage activity is in foreground of user interaction or in the background of user interaction." *Id.*, 100:56-101:39. The system uses one or more policies to "determine an appropriate prioritization for traffic to and/or from the network service consuming application." *Id.*, 101:47-57. For example, the system can (i) "cause[] the network service consuming application…traffic to be queued in [an] application traffic cache" for transmission over a network (*id.*, 101:53-102:11), or (ii) "restrict network access of a particular service usage activity" (*id.*, 102:12-37). SAMSUNG-1003, ¶¶32-33.

B. Prosecution History

The ’976 patent was allowed without any substantive prior art rejections. SAMSUNG-1002, 337-352. In allowing the claims, the Examiner identified the “closest prior art” as “Cole (USPN 2008/0080457),” “Venkatraman et al (USPN 2008/0034418),” and “Noonan et al (USPN 2006/0136882).” *Id.*, 346. The Examiner did not consider and/or substantively apply any rejection based on Rao, Oestvall, Montemurro, and Araujo. *Id.*; SAMSUNG-1003, ¶35.

III. THE CHALLENGED CLAIMS ARE UNPATENTABLE

A. [GROUND 1A] – Rao-Oestvall Renders Claims 1-4, 8-10, 13, 14, 16, 18-20, 25, 27, and 28 Obvious

1. Rao-Oestvall

(a) *Rao*[2]

Rao is focused on a “remote access architecture” for a system that provides “peer-to-peer communications and remote access connectivity.” SAMSUNG-1005, Abstract. The system includes clients 105 (instances of computing devices 102) that communicate with each other over a network 104 (and optionally through a gateway 340) and with other types of computing devices, such as servers 102e and server farms 102n. *Id.*, [0086]-[0096]; SAMSUNG-1003, ¶¶37-38.

[2] Descriptions of references and prior art combinations are incorporated into each mapping. All emphasis is added unless otherwise indicated.

Headwater Ex. 2001
Samsung v. Headwater
IPR2023-01362

Figure 1A shows an example of the Rao system:

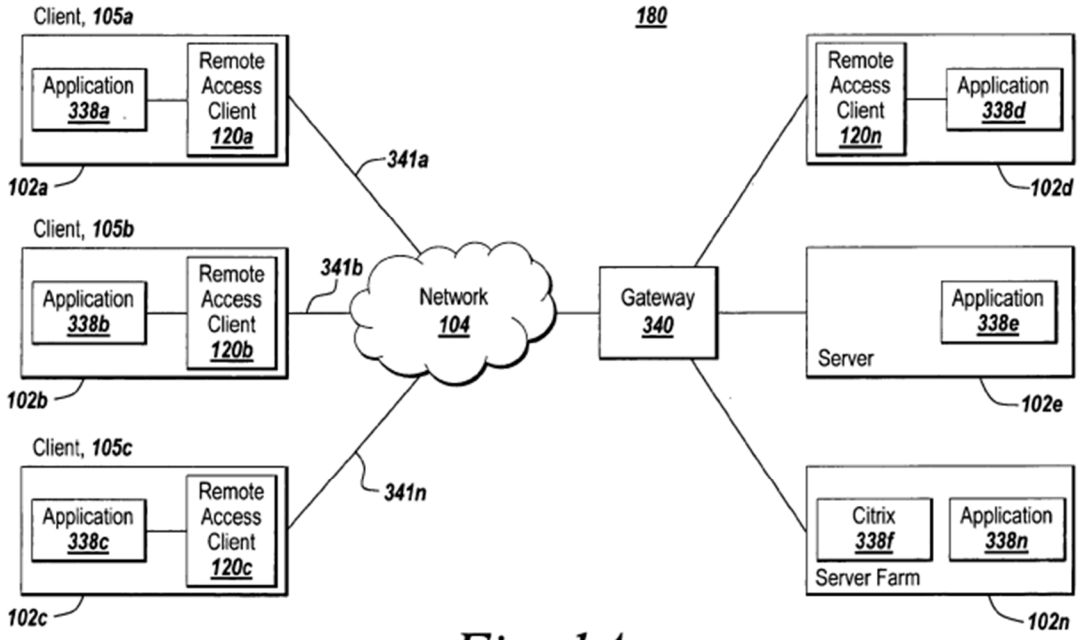

Fig. 1A

Rao addresses inefficient use of network resources when network communications are "processed in the order generated by the activity of a user and applications of the client," which is not "always desirable" since "a network packet generated or received for an application running in the background may be processed ahead of a network packet generated or received for the application running in the foreground." SAMSUNG-1005, [0001]. This results in increased latency and reduced quality of voice communication. *Id.*; SAMSUNG-1003, ¶39.

Rao describes a prioritization scheme that "provide[s] application-aware, client-specific prioritization of packet traffic." SAMSUNG-1005, [0003]. The

prioritization scheme is achieved by augmenting client 105 with remote access client 120 that interacts with applications 338 and network stack 310. SAMSUNG-1005, [0100]; SAMSUNG-1003, ¶40. Figure 1C shows an example of a system with remote access client 120:

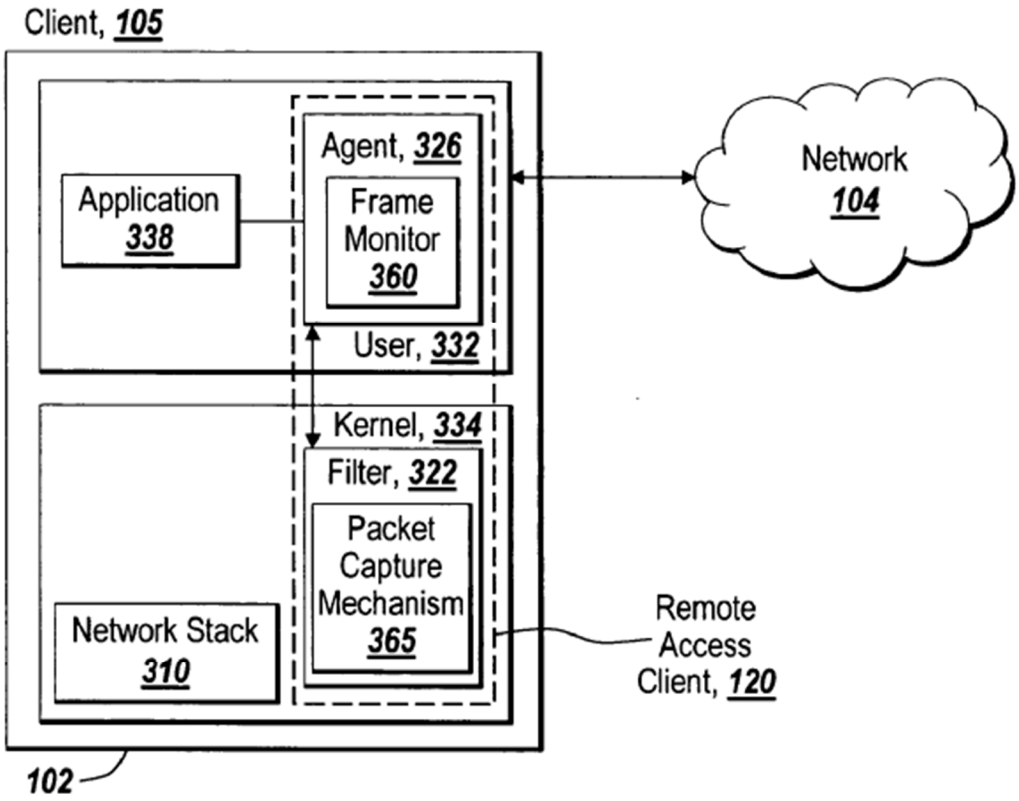

Fig. 1C

Remote access client 120 includes filter 322, which uses a filtering table "to determine what action to take against packets," including "ensur[ing] that unwanted packets are discarded" and "deny[ing] access to particular protocols or to prevent unauthorized access from remote computers by discarding packets to

specified destination addresses." SAMSUNG-1005, [0102]. An agent 326 with a frame monitor 360 "include[s] policies and logic for applying a policy to a received packet." *Id.*, [0108]. Frame monitor 360 also "transmit[s] a packet to a gateway 340 responsive to a policy-based determination made by the frame monitor 360." *Id.* Use of policies through remote access client 120 guides efficient use of network resources. SAMSUNG-1003, ¶¶41-42.

Rao further enables "intelligent and client centric prioritization of application network communications on a client based on the type and/or priority of an application." SAMSUNG-1005, [0179], FIG. 5A. To perform this prioritization, Rao "appl[ies] a policy to determine a condition of the client 105, or endpoint, at the time of transmission of the packet." SAMSUNG-1005, [0109]; SAMSUNG-1003, ¶43. Figure 5A shows an example of a client-side application-aware network communication system:

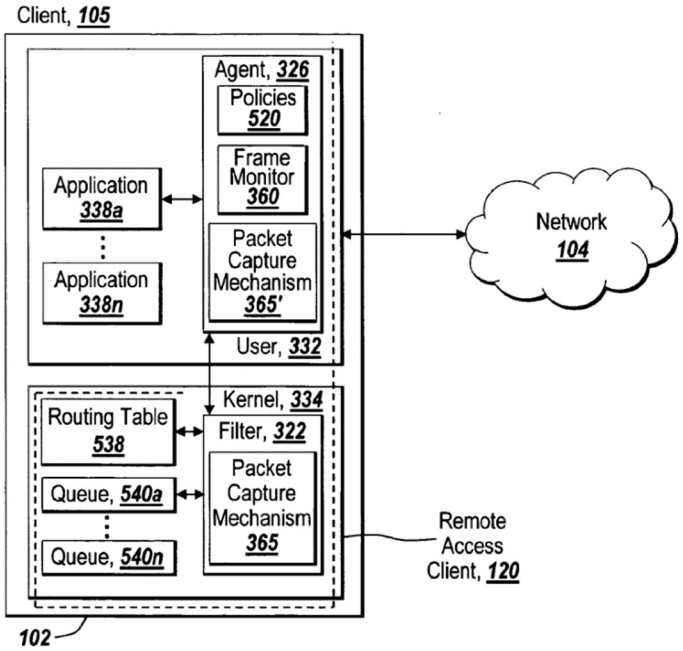

Fig. 5A

Rao offers non-limiting disclosure relating to the specification of policies 520 and how its system leverages each of these policies 520 for prioritization. SAMSUNG-1005, [0182]; SAMSUNG-1003, ¶44. As examples, policies 520 can be specified by "name of the application 338a-338n," "type of application 338a-338n," or "type of one or more protocols used by the applications 338a-338n." SAMSUNG-1005, [0182]. Further, policies 520 can "define prioritization based on whether an application is running in the foreground or the background of the client 105," "indicate prioritization based on the destination network address, such as host name or IP address, and/or destination port number," and be "specified conditionally, such as if one application 338a is running, a second application 338b

may have a higher or lower priority." *Id.* Indeed, "[o]ne ordinarily skilled in the art will recognize and appreciate the multitude of ways to define client-side application priorities." *Id.* Further, policies 520 are used to "determine which packets to queue and/or discard" and "apply a priority to network packets of applications 338a-338n." *Id.*, [0207]; SAMSUNG-1003, ¶44.

(b) *Oestvall*

Oestvall is focused on techniques to "preserve or conserve resources, such as battery power" on mobile devices. SAMSUNG-1006, [0002]. Battery consumption is "very important," particularly in devices that "consume high power levels by virtue of connecting to always-on GPRS or 3G cellular networks." *Id.*, [0004]. This problem is "especially acute for multi-tasking devices, i.e., devices with an operating system that can run several applications at the same time." *Id.*, [0007]. This occurs since conventional schedulers used for multitasking may be configured such that "applications will continue to run even when not actually in active use," which results in the applications continuing to "use some system resources, even when residing in the 'background.'" *Id.*, [0006]; SAMSUNG-1003, ¶¶45-46.

Oestvall addresses these power consumption challenges using techniques that "deny[] system resources and services to background applications that do not meet predefined 'trust' or certification criteria," which it refers to as "untrusted"

applications. SAMSUNG-1006, [0010]. Examples of untrusted applications include applications that are "not able to access certain predefined protected resources," applications from third-party sources, or applications that have not been validated using a "predefined validation or certification process." *Id.*, [0011]-[0013]; SAMSUNG-1003, ¶47.

Figure 1 shows an example of the Oestvall system:

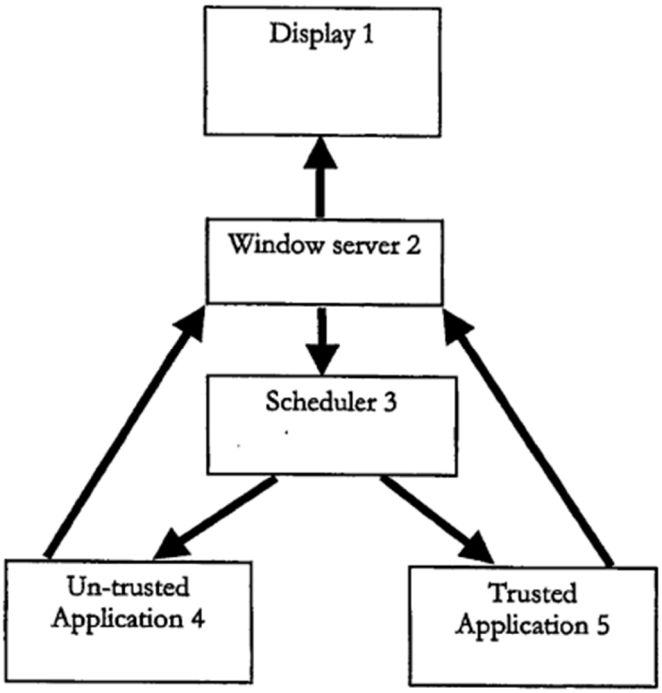

A window server component 2 determines "if an application is in the background or foreground on display 1." SAMSUNG-1006, [0023]. If the application is an untrusted application 4 and is running in the background, then the window server component 2 "send[s] a control signal to the scheduler 3" that prevents untrusted application 4 from "running, e.g., being given any services or

consuming any resources." *Id.* Oestvall offers several non-limiting examples for how scheduler 3 may regulate access to resources by a background untrusted application 4. *Id*. As examples, scheduler 3 may "never allocate any services or resources," or "place any interrupts from [the application] to the back of its queue and never allow them to be executed." *Id.* Scheduler 3 may also prevent background untrusted applications 4 from "'polling' for data over a wireless network," or "from running." *Id.*, [0024]. Further, when an application is in the foreground, then the application may be permitted to "run again—e.g., to be provided with resources and services." *Id.*, [0025]; SAMSUNG-1003, ¶48.

(c) *Combination*

As described above, in Rao, policies are used to prioritize transmission of certain higher-priority network packets over other lower-priority network packets. SAMSUNG-1005, [0179]-[0195], FIG. 5A. While Rao teaches that such prioritization techniques would have improved the efficient utilization of network resources, a person of ordinary skill in the art ("POSITA")[3] would have further understood that the prioritization techniques may have implications not specifically addressed within Rao's disclosure. SAMSUNG-1003, ¶62. For instance, by the Critical Date, a POSITA would have recognized that Rao's prioritization techniques reduce congestion and improve packet throughput. *Id.*; SAMSUNG-

[3] SAMSUNG-1003, ¶16 (defining a "POSITA").

1005, [0195]. But Rao does not account for application states in its prioritization techniques, and by the Critical Date, a POSITA would have understood and found obvious that application states similarly impact the problems addressed in Rao, such as network usage efficiency. SAMSUNG-1003, ¶62. A POSITA looking to implement Rao would have therefore been motivated to look to solutions to improve Rao's packet-based prioritization techniques. *Id.*

In seeking solutions, a POSITA would have identified Oestvall, which, like Rao, is focused on achieving efficiencies associated with mobile device operation. *Id.*, ¶63; SAMSUNG-1006, [0002]. Oestvall further offers techniques to "preserve[] system resources by denying system resources and services" to certain applications. SAMSUNG-1006, [0010]. A POSITA would have found obvious integration of Oestvall's resource conservation techniques into the Rao system to promote more efficient peer-to-peer communications and network access connectivity that also reduces power consumption on a mobile device. SAMSUNG-1003, ¶63. As explained below, Rao-Oestvall would have performed various types of prioritizations regulating access to device resources by applications, such as those based on network packet transmission (in Rao) and others based on the classification of an application (in Oestvall). Given Oestvall's focus on battery conservation, Rao-Oestvall would have therefore enabled prioritization in a manner that conserves battery power. *Id*.

In Rao-Oestvall (example below), a POSITA would have improved the agent 326 (red) to incorporate functionality associated with Oestvall's window server 2 (purple) and functionality associated with scheduler 3 (blue). SAMSUNG-1003, ¶64; SAMSUNG-1006, [0023]. Such a configuration would have enabled an improved agent to classify applications 338a-n (for which packet transmissions are prioritized) as "trusted" or "untrusted" applications. SAMSUNG-1006, [0023] The configuration would have also enabled the improved agent to prevent an untrusted application in the background from running or being given access to a service that consumes resources. *Id.* Below is a visual diagram of the Rao-Oestvall combination discussed above.

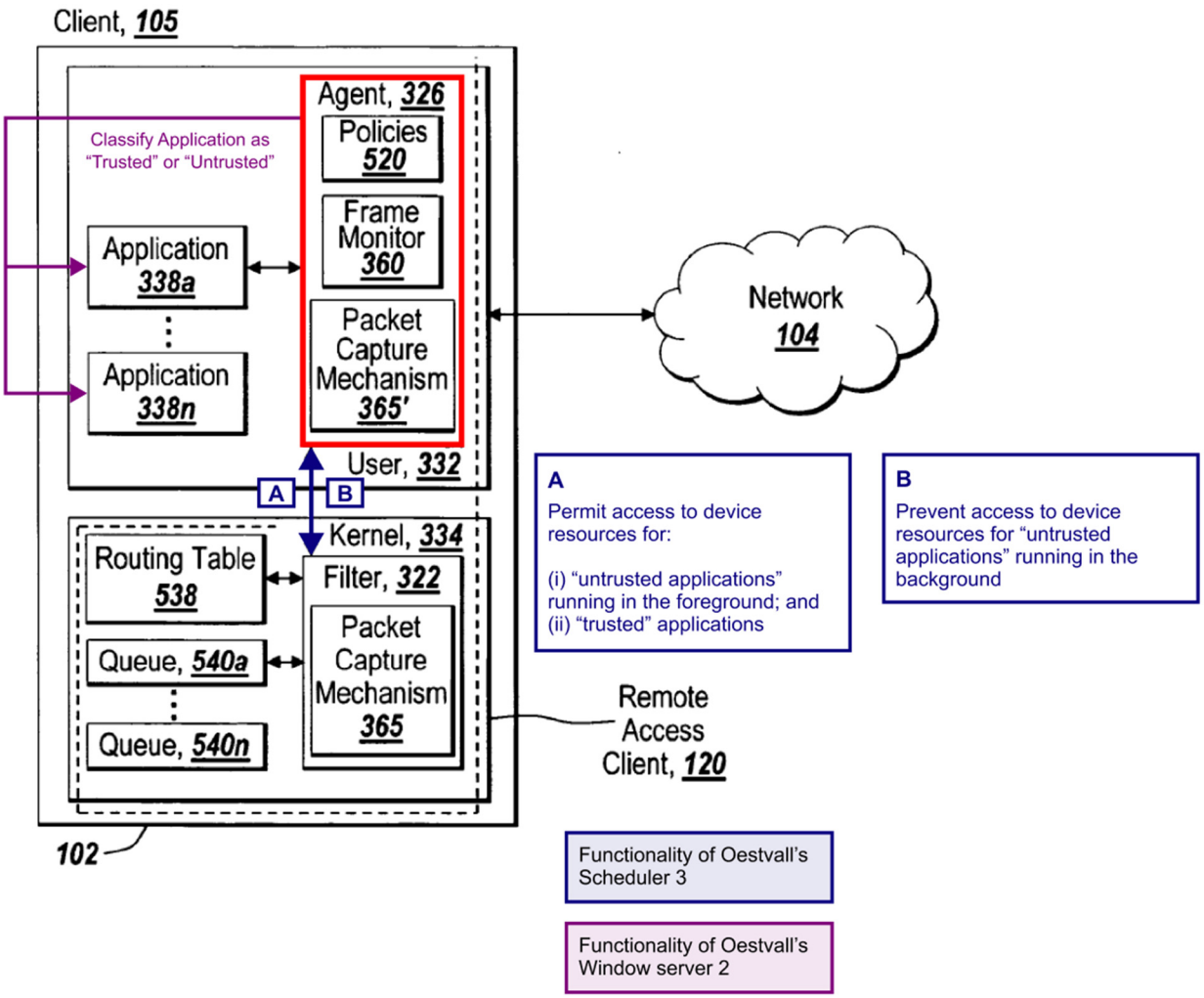

Rao-Oestvall

A POSITA would have found obvious that Rao-Oestvall (example above) enables policies that provide various types of prioritizations, consistent with Rao. SAMSUNG-1005, [0182]; SAMSUNG-1003, ¶65. This would have improved the use of policies in certain network scenarios contemplated in Rao since policies can be used to prevent network packet transmissions of applications that would have otherwise contributed to additional power consumption. *Id*.

To implement Rao-Oestvall, a POSITA would have also modified Rao's

policies 520 to include logic relating to a classification of an application. Such a modification is consistent with Rao, which specifies that the policies already "may be specified by the name of the application 338a-338n and/or the type of application 338a-338n." SAMSUNG-1005, [0182]. Further, policies "define prioritization based on whether an application is running in the foreground or the background of the client 105." *Id.* Thus, a POSITA would have found it natural to implement Rao-Oestvall such that the policies used by the device indicate information for both packet-based and application-based prioritizations. SAMSUNG-1003, ¶66.

Finally, configuring Rao's client to leverage Oestvall's teachings would have required only routine programming knowledge well within the skill of a POSITA prior to the earliest effective filing date. SAMSUNG-1003, ¶67. Indeed, the change would have amounted to nothing more than the use of a known technique to improve similar devices – in each instance a smart phone equipped with software to regulate device activity based on monitoring user-device interactions – in a similar way, and combining prior art elements according to known methods to yield the predictable results described above. *KSR v. Teleflex*, 550 U.S. 398, 417 (2007).

Furthermore, the elements of the resulting Rao-Oestvall system would each perform functions they had been known to perform prior to the combination—

client 105 would perform the same functions to prioritize higher-priority messages over lower-priority messages through the use of policies 520, as taught in Rao, but would leverage functionality offered by Oestvall's window server 2 and scheduler 3 to identify a classification of an application (trusted, untrusted) and the application's interaction state (foreground, background). SAMSUNG-1003, ¶68.

2. Analysis

[1.1]

Even if the preamble were limiting (it is not), Rao-Oestvall discloses it. As discussed in §III.A.1(c), Rao-Oestvall enables a device representing a type of "***wireless end-user device***." In Rao, "multiple computing devices 102a-102c" (also referred to as "clients 105a-105c") connect to a network using one or more network connections. SAMSUNG-1005, [0086]. Client 105 can be "any type and/or form of computing device 102 that can run one or more applications 338," such as a "web browser, web-based client, client-server application, a thin-client computing client." *Id.*, [0088]. Client 105 may also be a "mobile client," such as a "notebook, personal digital assistant (PDA), a smart phone" or "telecommunication device." *Id.*, [0198]; SAMSUNG-1003, ¶69.

[1.2]

Rao-Oestvall would have included network connectivity features of device 102 (client 105), thereby rendering this limitation obvious. Device 102 includes network interface 118, which enables connectivity to "Local Area Network (LAN),

Wide Area Network (WAN) or the Internet through a variety of connections," such as "standard telephone lines, LAN or WAN links," "broadband connections," "wireless connections," or "some combination of any or all of the above." SAMSUNG-1005, [0095], [0125]. Further, network interface 118 includes "a built-in network adapter, network interface card, PCMCIA network card, card bus network adapter, USB network adapter, **modem**, or any other device suitable for interfacing the computing device 102 to any type of network capable of communication…" *Id.* A POSITA would have therefore understood and found obvious to implement network interface 118 to enable multiple types of network connectivity such that network interface 118 includes, among others, a "***WWAN modem***" to permit Rao-Oestvall to communicate with network 104 as a WWAN ("***at least one WWAN***") for accessing services associated with a remote access client ("***communicate data for Internet service activities***"). SAMSUNG-1003, ¶¶70-71; SAMSUNG-1005, [0172], [0198]. Further, network configurations for mobile devices that enabled WLAN and WWAN connectivity and techniques for alternating connectivity between such configurations were conventional by the Critical Date. *Id.* (citing SAMSUNG-1007, [0030]; SAMSUNG-1009, [0035], FIG. 2).

[1.3]

As discussed for [1.2], Rao provides non-limiting disclosure relating to

network connectivity features provided by network interface 118, which would have been included in Rao-Oestvall. SAMSUNG-1005, [0095], [0125]. Network interface 118 enables connectivity "through a variety of connections," such as "standard telephone lines, LAN or WAN links," "broadband connections," "wireless connections," or "some combination of any or all of the above." SAMSUNG-1005, [0125]. A POSITA would have therefore understood and found obvious to implement network interface 118 to enable multiple types of network connectivity such that network interface 118 includes, among others, a "***WLAN modem***" to permit Rao-Oestvall to communicate with network 104 as a wireless LAN ("***at least one WLAN***") for accessing services associated with a remote access client ("***communicate data for Internet service activities***"). SAMSUNG-1003, ¶72. Further, network configurations for mobile devices that enabled WLAN and WWAN connectivity and techniques for alternating connectivity between such configurations were conventional by the Critical Date. *Id.*; SAMSUNG-1007, [0030]; SAMSUNG-1009, [0035], FIG. 2.

[1.4]

Rao-Oestvall incorporates a "***display device***" for displaying content and information associated with applications 338. SAMSUNG-1005, [0118]. For example, device 102 includes a "visual display device 124" for displaying information pertinent to use of the device as, for instance, a "personal computer or

computer server." *Id.*; *see id.*, [0122], FIG. 1D. Rao further indicates existence of a display device in device 102 since "agent 326 may provide a configuration mechanism such as a user interface, graphical or otherwise, designed and constructed for configuring or specifying the policies 520." *Id.*, [0183]; SAMSUNG-1003, ¶73.

[1.5]

Rao-Oestvall incorporates "***one or more processors***" for executing instructions relating to device functionality. SAMSUNG-1005, [0118]. For example, device 102 includes "central processing unit [112],"[4] which may be "any logic circuitry that responds to and processes instructions from the main memory 104." *Id.*, [0119]; SAMSUNG-1003, ¶74.

[1.6]

Rao-Oestvall incorporates applications 338 ("***first end-user application***"). SAMSUNG-1005, [0179]. Applications 338 are capable of "***interacting in the device display foreground***" given examples in Rao, such as a "web browser," "web-based client," "client-server application," and "thin-client computing client."

[4] Figure 1D depicts a "CPU 112," which is described in paragraphs [0118] and [0119] as "central processing unit 102." For consistency, this Petition references central processing unit (CPU) 112.

Id., [0088]. A POSITA would have understood that a web browser interacts in the device display foreground since its use involves a user interacting with one or more browser interfaces. SAMSUNG-1003, ¶75. Moreover, because in Rao, policies "define prioritization based on whether an application is running in the foreground or the background of the client 105," applications that are prioritized using policies 520 (applications 338) are thereby capable of operating in either the foreground or background. SAMSUNG-1005, [0182].

In Rao-Oestvall, applications 338 are also capable of ***"at least some Internet service activity when not interacting in the device display foreground with the user***." Rao recognizes that "an application running in the background may be processed ahead of a network packet generated or received for [an] application running in the foreground," indicating that application 338 running in the background is similarly capable of network activity. SAMSUNG-1005, [0003]; SAMSUNG-1006, [0008], [0016], [0021]-[0023]. A POSITA would have understood that applications not running in the foreground (running in the background) may still be capable of Internet activity. SAMSUNG-1003, ¶76; SAMSUNG-1005, [0004]. Indeed, Rao's contemplated "application-aware prioritization of client-side network communications" is premised upon this understanding—that applications not running in the foreground are capable of network activity—since, without it, a problem that Rao's solution is designed to

solve is rendered obsolete. *Id.* Further, in some embodiments, policy 520 "define[s] prioritization based on whether an application is running in the foreground or the background of the client 105," which illustrates certain scenarios in which an application is not running in the foreground and still capable of network transmissions. SAMSUNG-1005, [0182].

Rao-Oestvall would have also been capable of "***classifying***," for application 338, "***whether or not [the application 338], when running, is interacting in the device display foreground with the user***." As discussed above, because policies 520 define prioritization based on an application's interaction state when running (foreground, background), a POSITA would have understood and found obvious that evaluation of policies 520 by Rao-Oestvall involves the type of classification recited by this limitation. SAMSUNG-1003, ¶77. Specifically, remote access client 120 (which would have run on Rao-Oestvall) "determine[s] whether the application 338a-338n associated with [a] network packet is running in the foreground or the background." SAMSUNG-1005, [0188]. This determination/classification further involves "determin[ing] any priorities, such as process[ing] task priority, assigned to the application 338a-338n by the operating system" of the device. *Id.*

[1.7]

Rao-Oestvall would have applied policies (including the "***first differential***

traffic control policy") that "define prioritization based on whether an application is running in the foreground or the background of the client 105." SAMSUNG-1005, [0182]. As discussed for [1.6], since this classification (foreground, background) is used to apply policies 520 to adjust network transmissions of application 338a, the classification involves "***apply[ing] [the policy 520] to Internet service activity on behalf of [the application 338]***." SAMSUNG-1005, [0003], [0004], [0182], [0188]; SAMSUNG-1003, ¶78.

A POSITA would have found it obvious to configure policy use by Rao-Oestvall to increase device efficiency in scenarios where device operation increases battery consumption, such as a time period when the device is engaged in network activity over a WWAN network. SAMSUNG-1003, ¶79. Indeed, in Oestvall, "battery conservation in battery operated computing devices is very important, particularly in devices such as smartphones that consume high power levels by virtue of connecting to always-on GPRS or 3G cellular networks." SAMSUNG-1006, [0004]. A POSITA would have found it advantageous to implement Rao-Oestvall to apply policies 520 to regulate application activity ("***apply [the policy 520] to Internet service activity on behalf of [the application 338]***") to reduce battery consumption during time periods when its device is connected to "always-on GPRS or 3G cellular networks" ("***a time period when data for Internet service activities is communicated through a WWAN modem***

connection to the at least one WWAN"). SAMSUNG-1003, ¶79. For example, in some scenarios where Rao-Oestvall is communicating over a WWAN network, its device would have leveraged Rao's technique to intercept lower-priority network packets, by leveraging Oestvall's technique of denying access to services or resources, each of which would have reduced battery consumption. *Id*.

Moreover, the plain meaning of this limitation does not require any mobile device configuration in which policy application exclusively occurs when Internet service activities of a mobile device is communicated through a WWAN mode. SAMSUNG-1003, ¶80. Rather, as explained above, the limitation is met by any mobile device configuration in which policy application occurs on a mobile device configured to communicate over either a WWAN or WLAN. Since Rao-Oestvall is configured to communicate over either a WWAN or WLAN, and further has functionality to apply policies in either network scenario, the configuration of Rao-Oestvall renders this limitation obvious. *Id.*

Rao describes using policy 520 to enable application-aware prioritization, suggesting to a POSITA that policy 520 is applied "***when***" application 338 is classified as not running in the foreground. SAMSUNG-1003, ¶81. This interpretation is consistent with Rao's disclosures that policies 520 "specify[] client-side prioritization of network communications related to applications 338a-338n" (SAMSUNG-1005, [0182]) and its motivation to address a scenario in

which "a network packet generated or received for an application running in the background [is] processed ahead of a network packet generated or received for the application running in the foreground" (*id.*, [0003]). A POSITA would have found obvious that the evaluation of polices by Rao-Oestvall to prioritize network transmissions of an application given its interaction state to satisfy any temporal requirement between the use of a policy and classification of an interaction state of an application recited by this limitation. SAMSUNG-1003, ¶81.

Further, Rao and Oestvall each disclose techniques for regulating activity of an application based on one or more classifications of the application, rendering obvious that Rao-Oestvall would have applied a policy to prioritize network transmissions of application 338. This results in "***Internet service activity on behalf of the [application 338]***" being "***disallowed***" in various ways. For example, based on Rao, if an application is classified as running in the background, network packets of that application would be stored in a queue behind other application(s) with a higher prioritization, resulting in temporary disallowance of network packet transmission. SAMSUNG-1005, [0038], [0102]. In this scenario, interception of network packets of the application by Rao-Oestvall would have resulted in Internet network service activity associated with intercepted network packets being presently "***disallowed***" until and so long as the device is instead focused on handling "one or more network packets ahead of at least one network

packet in the queue" associated with the application. SAMSUNG-1005, [0038], [0046]; SAMSUNG-1003, ¶82.

As another example, a POSITA would have configured Rao-Oestvall to implement Oestvall's techniques of preventing an untrusted application running in the background from "being given any services or consuming any resources." SAMSUNG-1006, Abstract. As discussed in §III.A.1(c), this would have been accomplished using an Oestvall-like scheduler in Rao-Oestvall based on a classification of application 338 and a determination by an Oestvall-like window server component that determines if the application is running in the foreground or background. SAMSUNG-1006, [0023]. Thus, in a scenario where application 338 is an untrusted application presently in the background, the Oestvall-like scheduler would "prevent[] the [application 338] from running," e.g., "operate so as to never allocate any services or resources to the [application 338]." *Id.* Because Internet network service activity is a type of service or resource service, in this scenario, the prevention of access to resources and services for the application 338 by Rao-Oestvall would have resulted in the Internet network service activity associated with application 338 being "***disallowed***" as long as the application 338 remains in the background (based on its classification as an untrusted application). SAMSUNG-1003, ¶83.

[1.8(a)]

As discussed in §III.A.1(c), a POSITA would have configured Rao-Oestvall to perform various types of prioritizations, e.g., based on network packet transmission (from Rao) and application classification (from Oestvall). SAMSUNG-1003, ¶84; SAMSUNG-1005, [0003], [0004], [0182], [0188]; SAMSUNG-1006, [0002], [0023]. Rao-Oestvall would have enabled a configuration that regulates an application's access to system resources (resources for accessing a network), rendering the requirements of this limitation obvious.

Rao-Oestvall includes an improved version of Rao's agent 326 that regulates applications by applying a policy ("***applied first differential traffic control policy***"). For example, in Oestvall, an applied policy specifies a condition that "prevents [an] untrusted application 4 from running," including accessing device network resources ("***one or more network access conditions***"). SAMSUNG-1006, [0023]. Since this condition impacts normal operation of the application, a POSITA would have understood and found it obvious that Rao-Oestvall provides an indication to the application. SAMSUNG-1003, ¶85. For example, Rao's Figure 5A (annotated below) shows a bi-directional arrow (red), indicating that, in some instances, agent 326 provides communications to applications 338a-n. Agent 326 includes packet capture mechanism 365, which may use any hooking application programming interface (API) to intercept, hook, or otherwise **obtain inbound and/or outbound packets of the client 105, such as the network traffic**

associated with application 338." Rao, [0110].

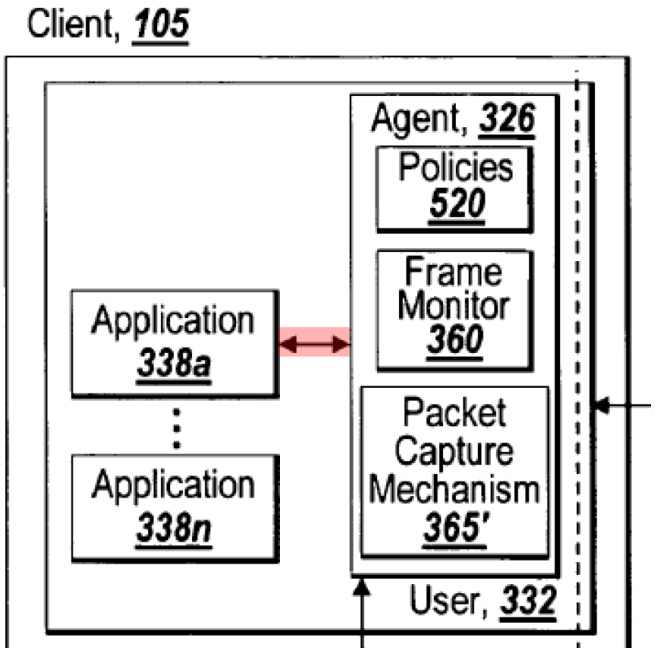

Oestvall similarly contemplates embodiments in which a policy decision is communicated to an application, since the application "**maybe requested** (but not prevented) to stop running if in background." SAMSUNG-1006, [0015], [0023] (describing alternatives for regulating an application). When Rao-Oestvall prevents an application running in the background from accessing device resources (including device network resources), a POSITA would have found it obvious that the application receives an indication relating to the prevention ("***indicate …one or more network access conditions***"). *Id.*, [0023].

Further, a POSITA would have also found it obvious to implement policy evaluation in Rao-Oestvall using one of several well-known techniques that provide indications to applications relating to policy evaluation. SAMSUNG-

1003, ¶86. As one example, in Araujo (SAMSUNG-1011), "if [a] power state change is not allowable under [a] policy," the device can "block the request" and "notif[y] [the program] that the request will not be processed." SAMSUNG-1011, [0038], [0041]; §III.C.1, *infra*; *see* [12], [15], [21], [22]. As another example, Oestvall incorporates by reference Dive-Reclus (SAMSUNG-1026), which teaches using permissions to regulate API calls (granting, denying) made by applications in accessing a network. SAMSUNG-1006, [0020]; SAMSUNG-1026, 16:23-17:28, 20. In this example, a POSITA would have found it obvious that a permission decision for an API call by an application (granting, blocking) involves providing an indication to the application regarding the permission decision. SAMSUNG-1003, ¶86.

Further, based on disclosures of API usage in Rao and Oestvall, the improved agent in Rao-Oestvall would have leveraged several types of application programming interfaces (APIs) in regulating applications. SAMSUNG-1003, ¶87. For example, Rao contemplates using an IOCTL API for interfacing with device drivers (SAMSUNG-1005, [0106], [0190]) and a hooking API for intercepting and/or hooking network traffic of applications (*id.*, [0166]). Rao also describes leveraging any suitable "means" or "mechanism" to implement functionality relating to prioritization (interception). *Id.*, [0106]. Likewise, Oestvall incorporates by reference Dive-Reclus, which teaches permissions regulating

network access by a third-party application that uses an API call, and POSITA would have found obvious that a permission decision (grant, deny) is communicated to the third-party application through a corresponding API. SAMSUNG-1006, [0020]; SAMSUNG-1026, 16:23-17:28, 20. Given these disclosures, a POSITA would have understood and found obvious that APIs leveraged by the improved agent of Rao-Oestvall include those described in Rao and Oestvall, as well as conventional APIs known by the Critical Date. SAMSUNG-1003, ¶87.

One example is a Java sockets API through which an application communicates data over a network. SAMSUNG-1020, 3-4. Rao's device can run the Java operating system, and thus, a POSITA would have understood and found obvious that, in some implementations of Rao-Oestvall, applications running on the device would access the network using the Java sockets API. *Id.*; SAMSUNG-1005, [0088], [0128]. For example, when a network access condition is used to prevent an application from accessing the network, a POSITA would have understood and found obvious that the application would have received an indication, via the Java sockets API, of the network access condition. SAMSUNG-1003, ¶88. Finally, use of APIs to provide indications to applications were well-known by the Critical Date and a POSITA would have found it obvious to use well-known APIs to provide communications to applications in Rao-Oestvall.

SAMSUNG-1003, ¶89 (citing SAMSUNG-1016, 1, 3; SAMSUNG-1019, Abstract).

[1.8(b)]

As discussed for [1.8(a)], a POSITA would have configured Rao-Oestvall to perform various types of prioritizations. SAMSUNG-1003, ¶90; SAMSUNG-1005, [0003], [0004], [0182], [0188]; SAMSUNG-1006, [0002], [0023]. For example, a POSITA would have found obvious that, in a first scenario, an application is classified as an untrusted application and is presently running as a background process. SAMSUNG-1003, ¶90; SAMSUNG-1005, [0003], [0004], [0182], [0188]; SAMSUNG-1006, [0002], [0023]. In this scenario, Rao-Oestvall would have applied a policy that in effect prevents the application from obtaining access to device resources (including network resources). Since applying the policy results in a change in application operation, the policy includes a condition ("***first network access condition***") that prevents the application from accessing device resources ("***unavailability to the first end-user application***") running in the background ("***when…not interacting in the device display foreground with the user***"). SAMSUNG-1003, ¶90. Further, a POSITA would have understood Oestvall's non-limiting reference to an application "being given any services or consuming any resources" to include network connectivity resources, and thus, found obvious that policy evaluation in the first scenario to be pertinent to

"***Internet data service that is available via the WWAN modem***." SAMSUNG-1006, [0023]; SAMSUNG-1003, ¶90.

Additionally, Rao-Oestvall would have provided regulations relating to network access. As discussed for [1.8(a)], Oestvall references permissions regulating network access by a third-party application that uses an API call, and POSITA would have found obvious that, when network access is denied, the denial decision is communicated to the third-party application through a corresponding API. SAMSUNG-1006, [0020]; SAMSUNG-1026, 16:23-17:28, 20; SAMSUNG-1003, ¶91.

[1.8(c)]

As discussed for [1.8(a)], a POSITA would have configured Rao-Oestvall to perform various types of prioritizations. A POSITA would have found obvious that, in a second scenario involving Rao-Oestvall, an application is classified as an untrusted application and is presently running as a foreground process. SAMSUNG-1003, ¶92; SAMSUNG-1005, [0003], [0004], [0182], [0188]; SAMSUNG-1006, [0002], [0023]. In this scenario, Rao-Oestvall would have applied a policy that permits the application to access device resources (including network resources). Since applying the policy results in a change in application operation, the policy includes a condition ("***second network access condition***") that permits the application to access device resources ("***available to the first end-***

user application") when running in the foreground ("***when…interacting in the device display foreground with the user***"). SAMSUNG-1003, ¶92. Further, a POSITA would have understood Oestvall's non-limiting reference to an application "being given <u>any</u> services or consuming <u>any</u> resources" to include network connectivity resources, and thus, found obvious that policy evaluation in the first scenario to be pertinent to "***Internet data service that is available via the WWAN modem***." SAMSUNG-1006, [0023] (emphasis added); SAMSUNG-1003, ¶92.

Additionally, Rao-Oestvall would have provided regulations relating to network access. As discussed for [1.8(a)], Oestvall references permissions regulating network access by a third-party application that uses an API call, and POSITA would have found obvious that, when network access is granted, the grant decision is communicated to the third-party application through a corresponding API. SAMSUNG-1006, [0020]; SAMSUNG-1026, 16:23-17:28, 20; SAMSUNG-1003, ¶93.

[2]

As discussed for [1.6] and [1.7], Rao-Oestvall would have incorporated the functionality to detect whether an application is presently running in the background ("***not interacting in the device display foreground with the user***"). SAMSUNG-1003, ¶94. From Rao, because policies "define prioritization based on

whether an application is running in the foreground or the background of the client 105[,]" Rao's disclosure suggests existence of the capability to detect when an application is not in the foreground. SAMSUNG-1005, [0182], [0188], [0189]. Rao attributes an application "in the foreground" as one that is "currently in active use by the user," which would have led a POSITA to recognize that an application in the background is one that is not currently in active use by the user ("***when the user of the device is not directly interacting with that application or perceiving any benefit from that application***"). SAMSUNG-1005, [0003].

Oestvall offers similar disclosure regarding regulating application operation based on whether an application is running in the foreground or the background. SAMSUNG-1006, [0021]-[0023]. Further, a POSITA would have found obvious that differentiated use of "foreground" and "background" in Rao and Oestvall indicates examples of applications in the background are those where the user is not presently interacting with the application through a user interface. SAMSUNG-1003, ¶95. Indeed, techniques for adapting the prioritization for an application or otherwise impacts its operation based on the application's direct user interaction were well-known by the Critical Date. *Id.*, ¶¶96-97 (citing SAMSUNG-1013, 9:33-35; SAMSUNG-1010, 10:16-44).

[3]

Rao-Oestvall would have incorporated the functionality to output a user

interface relating to various aspects of policies used for prioritization ("***user interface***"). From Rao, "agent 326 may provide a configuration mechanism such as a user interface, graphical or otherwise, design and constructed for configuring or specifying the policies 520." SAMSUNG-1005, [0183]. A POSITA would have found it obvious to configure the improved agent in Rao-Oestvall to similarly provide a user interface to provide information regarding various aspects of applying policies for prioritization, which would include information regarding why the first differential traffic control policy is applied to the first end-user application. SAMSUNG-1003, ¶98. Moreover, as discussed for [1.8(a)], Oestvall incorporates by reference Dive-Reclus, which teaches blocking an "unsigned" application and provides an interface requesting a user to confirm whether the application should be blocked. SAMSUNG-1026, 19:17-25, FIG. 2. Moreover, user interfaces for providing information regarding policy evaluation were well-known by the Critical Date. SAMSUNG-1003, ¶¶99-101 (citing SAMSUNG-1010, FIG. 7A, 24:16-20, 25:1-13); SAMSUNG-1007, [0030].

[4]

As discussed for [3], Rao-Oestvall would have incorporated the functionality to output a user interface relating to various aspects of policies used for prioritization, including options for setting how policies are used for prioritization ("***options to set, control override, or modify service usage controls***"). From Rao,

"agent 326 may provide a configuration mechanism such as a user interface, graphical or otherwise, design and constructed for configuring or specifying the policies 520." SAMSUNG-1005, [0183]. A POSITA would have found it obvious to configure the improved agent in Rao-Oestvall to similarly provide a user interface for "configuring or specifying" policies for prioritization. SAMSUNG-1003, ¶102. A POSITA would have also found obvious that the configuration or specification of policies represent "***service usage controls***" since they can be customized and/or modified to affect the evaluation of policies ("***affect the first differential traffic control policy***"). *Id*. Indeed, user interfaces for configuring the types of policies described in Rao were well-known before the Critical Date. *Id.*, ¶¶103-105 (citing SAMSUNG-1010, FIG. 7A, 24:16-20, 25:1-13). Additionally, as discussed for [1.8(a)], Oestvall incorporates by reference Dive-Reclus, which teaches blocking an "unsigned" application and provides an interface requesting a user to confirm whether the application should be blocked. SAMSUNG-1026, 19:17-25, FIG. 2.

[8.1], [8.2], [8.3]

A POSITA would have found it obvious that Rao-Oestvall renders elements of claim 8 obvious in the same manner as explained above for the "***first end-user application***" based on disclosures identified for corresponding claim 1 limitations below. SAMSUNG-1003, ¶¶106-107.

Claim 1 Limitation	Corresponding Limitations
[1.6]	[8.1]
[1.7]	[8.2]
[1.8(a)]	[8.3]

Further, neither Rao nor Oestvall indicate that their respective prioritization techniques are limited to any specific application (or any specific type of application). SAMSUNG-1003, ¶108. Indeed, Oestvall describes "trusted" and "untrusted" applications and teaches applying different access policies for each, rendering this claim obvious. SAMSUNG-1006, [0020]. Further, policies "may be specified hierarchically to account for multiple applications 338a-338n and/or multiple protocols that may be executed on the client 105 at any point." SAMSUNG-1005, [0182].

[9]

As discussed for [1.8(a)], in Rao-Oestvall, an improved agent would have leveraged several types of APIs (including the recited "***API***") in regulating applications. SAMSUNG-1005, [0110], [0166], [0190], [0205]. Rao's agent 326 is part of a "network stack" ("***networking stack***") with "network layers," including "applications 338a-338n," "gateway 340," "peer computing device," and "remote access client 120." *Id.*, [0185]. For example, "stacks 310a and 310b" are "network stacks of computing devices 102a-120b or gateway 340." *Id.*, [0196]. A POSITA would have understood and found obvious that the improved agent in Rao-Oestvall

(an element of Rao's Figure 5A environment) is part of the network stacks. Further, since the improved agent leverages one or more of the APIs described in Rao, a POSITA would have understood and found obvious that a network stack including the agent 326 is "***integrated with***" the APIs. SAMSUNG-1003, ¶109; SAMSUNG-1005, [0106], [0166], [0190], [0203].

For example, in Rao, "[an] application hooking is implemented via an application programming interface (API)," so that "the hooking of network packets occurs at the network layer of the network stack 310a-310n." SAMSUNG-1005, [0166]. Rao also discusses a network architecture of a "network stack." *Id.*, [0100]. Indeed, network configurations similar to those described in Rao in which an API is "integrated with" a networking stack were conventional by the Critical Date. SAMSUNG-1003, ¶¶110-111 (citing SAMSUNG-1021); SAMSUNG-1005, [0100]).

[10]

As described for [9], Rao-Oestvall would have been configured to operate within one of Rao's network stacks ("***networking stack***"). SAMSUNG-1005, [0185], [0190], [0196], FIG. 3A. The network stacks include at least an "application layer" ("***application service interface layer***") that, for example, allows applications 338a-338n to establish "an application level session." SAMSUNG-1005, [0203]; *id.*, [0100], [0133], [0198]; SAMSUNG-1003, ¶112.

A POSITA would have understood and found obvious that packet interception, as provided by Rao-Oestvall, involves identifying the traffic of data generated by applications ("***identify[ing] application traffic flows***") since a processor identifies a packet in the process of determining that the identified packet should be intercepted. SAMSUNG-1003, ¶113. Rao provides several packet intercepting techniques, each of which a POSITA would have understood and found obvious involves identifying packets (examples of application traffic flows). SAMSUNG-1005, [0110], [0111], [0137], [0143], [0158].

A POSITA would have also found obvious that Rao-Oestvall is configured to "***identify application traffic flows prior to flows entering the network stack***" through Rao's disclosure of a filter process 322 intercepting a network packet "before [the packet] reaches the network stack 310a-310b." SAMSUNG-1005, [0166]; SAMSUNG-1003, ¶114. Further, a POSITA would have understood and found obvious that, based on the architectures disclosed in Rao (Figures 3A, 6A), packet interception (packet identification) occurs at the "application layer" ("***application service interface layer***"), which sits at a general network layer architecture. *Id.*

[13]

As described in §III.A.1(c), Rao-Oestvall would have applied policies based on an application's present interaction state (foreground, background). A POSITA

would have understood and found obvious that the present interaction state represents an example of "***device usage state***" as it indicates whether the application is currently made available for display on a mobile device, and therefore, available for active use by a user. SAMSUNG-1003, ¶115. For example, in Rao, an application is not in the background if it is "currently in active use by the user." SAMSUNG-1005, [0003]. A POSITA would have recognized that the Rao device performs ongoing monitoring of which applications are running, and which are running in the foreground and background, so it can dynamically determine whether to apply policies. SAMSUNG-1003, ¶116; SAMSUNG-1005, [0182], [0188]. Rao also includes as examples other device usage states relating to the network such as congestion state. SAMSUNG-1005, [0195]. Likewise, in Oestvall, an untrusted application is deemed to be in the background if "the display shows a screen saver or is actually turned off." SAMSUNG-1006, [0023], [0024]. Thus, Rao-Oestvall would have been configured to adjust policy evaluation relating to application-related prioritization ("***dynamically change the application of the first differential traffic control policy***") based on the application's present interaction state ("***device usage state***"). SAMSUNG-1003, ¶¶117-119.

[14]

As described in §III.A.1(c), Rao-Oestvall would have applied policies based on an application's present interaction state (foreground, background). A POSITA

would have understood and found obvious that the present interaction state represents an example of a "***state of user interface priority***" as it indicates whether the application is prioritized for display on a mobile device. SAMSUNG-1003, ¶120. Oestvall recognizes that, "[i]n conventional multi-tasking computers running several different applications at the same time, an application will issue a software interrupt to the operating system," and "interrupts from different applications are prioritised and queued by an interrupt handler." SAMSUNG-1006, [0005]. Oestvall also teaches prioritization based on a "trust" classification of an application, which a POSITA would have understood and found obvious is another example of a "***state of user interface priority***." *Id.*, [0015].

Similarly, in Rao, policies "define prioritization based on whether an application is running in the foreground or the background of the client 105." SAMSUNG-1005, [0182]. Thus, a POSITA would have found obvious that Rao-Oestvall applies policies to perform application-related prioritization based on the various examples of present interaction states described in Rao and Oestvall ("***classify whether or not the first end-user application***" is "***interacting in the device display foreground with a user***"). SAMSUNG-1003, ¶121. For example, an application in the foreground is "currently in active use by the user," which a POSITA would have understood and found obvious indicates a user interface priority in that the application is prioritized over other applications that are running

in the background. SAMSUNG-1005, [0182]. Moreover, the use of states of user interface priority in coordinating application operation was well-known before the Critical Date and a POSITA would have found obvious the use of states of user interface priority for classification in Rao-Oestvall. SAMSUNG-1003, ¶¶122-124 (citing SAMSUNG-1013, 9:19-35; SAMSUNG-1024, 1; SAMSUNG-1025, 1).

[16]

As described in §III.A.1(c), Rao-Oestvall would have applied policies based on an application's present interaction state (foreground, background). SAMSUNG-1006, [0023]. A POSITA would have understood and found obvious that the present interaction state represents an example of "***application behavior***" since it indicates whether the application is available for display on a mobile device. SAMSUNG-1003, ¶125. In Oestvall, an untrusted application is deemed to be in the background if "the display shows a screen saver or is actually turned off." SAMSUNG-1006, [0024]. Likewise, in Rao, an application is in the background if it is "currently in active use by the user." SAMSUNG-1005, [0003]. Further, Rao-Oestvall would have been configured to apply a policy to perform application-related prioritization based on the application's present interaction state ("***associate the first end-user application with the first differential traffic control policy***").

[19]

Rao-Oestvall would have included an improved agent ("***agent***") for performing management operations for applying policies for prioritization. SAMSUNG-1005, [0182]; SAMSUNG-1006, [0023]. As discussed in §III.A.1(c) and [1.8(a)], a POSITA would have configured the improved agent to prevent an untrusted application from running or being given access to a service that consumes resources. In Oestvall, this is accomplished using a "control signal" that results in application functionality being prevented. SAMSUNG-1006, [0023]. A POSITA would have understood and found obvious that such restriction would have precluded an application from sending user interface messages ("***block, modify, remove, or replace…user interface messages***"). SAMSUNG-1003, ¶126. For example, the restriction denies "system resources" and "CPU activity" that would have been necessary for an application to generate and output user interface messages. SAMSUNG-1006, [0021]. As another example, Oestvall incorporates by reference Dive-Reclus, which teaches blocking an "unsigned" application and provides an interface over the blocked application asking whether it should be blocked. SAMSUNG-1026, 19:17-25, FIG. 2.

[20]

As discussed for [1.7], Rao-Oestvall renders obvious that application-related prioritization results in "***Internet service activity on behalf of the [application 338]***" being "***disallowed***." Further, Rao-Oestvall incorporates Rao's packet-related

prioritization techniques, which includes "intercepting network traffic of any of the applications 338a–338n," and thus, involves "***intercepting open, connect, and/or write requests by the first end-user application to a network stack***." SAMSUNG-1005, [0024]-[0031], [0106], [0166], [0180], [0184], [0185], [0190], [0196], [0203]; SAMSUNG-1003, ¶127; [9], *supra*.

[25]

As discussed for [1.8(a)], in Rao-Oestvall, an improved agent would have leveraged several types of APIs (including the recited "***API***") in regulating applications. SAMSUNG-1005, [0110], [0166], [0190], [0205]. For example, Rao use a "hooking application programming interface (API) to intercept, hook, or otherwise obtain inbound and/or outbound packets of the client 105, such as the network traffic associated with application 338." SAMSUNG-1005, [0110]. A POSITA would have understood and found obvious that the APIs leveraged by the improved agent in Rao-Oestvall includes a "***network access API***." SAMSUNG-1003, ¶128. As another example, Oestvall incorporates by reference Dive-Reclus, which teaches using permissions to regulate API calls (granting, denying) made by applications in accessing a network. SAMSUNG-1006, [0020]; SAMSUNG-1026, 16:23-17:28, 20; SAMSUNG-1001, 92:1-26.

[27]

As discussed for [1.8(a)] and [1.8(c)], in Rao-Oestvall, an improved agent

would have leveraged several types of APIs (including the recited "***API***") in regulating applications. SAMSUNG-1005, [0110], [0166], [0190], [0205]. Further, a POSITA would have understood and found obvious that APIs leveraged by the improved agent of Rao-Oestvall includes those described in Rao and Oestvall, as well as conventional APIs known by the Critical Date. SAMSUNG-1003, ¶129; SAMSUNG-1020, 3-4. For example, when a network access condition is used to permit an application to access network resources, a POSITA would have understood and found obvious that the Java sockets API provides an indication to the application of the network access condition ("***API informs the first end-user application when it is allowed to access Internet data service***"). SAMSUNG-1003, ¶129. Such a configuration would have supported Oestvall's disclosure that, "[w]hen the untrusted application is brought to the foreground again, it is allowed to run again." SAMSUNG-1006, [0021]. As another example, Oestvall incorporates by reference Dive-Reclus, which teaches using permissions to regulate API calls (granting, blocking) made by applications in accessing a network, and a POSITA would have found it obvious that granting or blocking permission for an API call by an application involves informing the application when it is allowed to access a network service available via the network modem. SAMSUNG-1003, ¶129 (citing SAMSUNG-1026, 16:23-17:28, 20).

[28]

As discussed for [1.8(a)], in Rao-Oestvall, an improved agent would have leveraged several types of APIs (including the recited "***API***") in regulating applications. SAMSUNG-1005, [0110], [0166], [0190], [0205]. Further, a POSITA would have understood and found obvious that APIs leveraged by the improved agent of Rao-Oestvall include those described in Rao and Oestvall, as well as conventional APIs known by the Critical Date. SAMSUNG-1003, ¶130; SAMSUNG-1020, 3-4. In Oestvall, when an application running in the background requests network access, the application is denied access to system resources (including network access resources), which results in the application being information of one or more network traffic controls that the application is expected to implement. SAMSUNG-1006, [0023]. Oestvall also incorporates by reference Dive-Reclus, which teaches permission decisions regulating network access by third-party applications that use API calls. SAMSUNG-1006, [0020]; SAMSUNG-1026, 16:23-17:28, 20. A POSITA would have found it obvious that a permission decision is an example of "***one or more network traffic controls***" that controls network access, which is communicated to the application through a corresponding API ("***API informs the first end-user application of one or more network traffic controls***"). SAMSUNG-1006, [0020]; SAMSUNG-1026, 16:23-17:28, 20. For example, a POSITA would have recognized that instructions provided by the API is capable of opening connections, sending and receiving data,

and closing connections, each of which involves controlling when these network operations by an application occur and how they are handled. SAMSUNG-1003, ¶131.

B. [GROUND 1B] – Rao-Oestvall-Montemurro Renders Claims 5-7, 11, 17, 18, 23, 24, 26, and 29 Obvious

1. Rao-Oestvall-Montemurro

(a) *Montemurro*

Montemurro is focused on "policy-based routing of communications among two or more modes of wireless communication." SAMSUNG-1007, [0001]. Devices with such connectivity capabilities are "dual or multi-mode devices," with "radio access technologies that provide access to multiple network types," including WLAN, WWAN. *Id.*, [0003]. But "[t]here are costs associated with application access from these different network[s,]" and thus, "[i]t is therefore desirable to have a mechanism that seeks to optimize communications." *Id.*, [0004]; SAMSUNG-1003, ¶49.

Montemurro's mechanism relies on policies to "configure connections and routes." SAMSUNG-1007, [0011]. The is accomplished using a "rules engine" that "evaluates [the] policies on a status change…to configure a routing table." *Id.* Together, the rules engine and the routing table "provides an appropriate connection to an application for its respective communications." *Id.*; SAMSUNG-1003, ¶50.

Figure 2 (below) shows "policy-based data routing for multi-mode operations of device 102 for communicating with network infrastructure." SAMSUNG-1007, [0024].

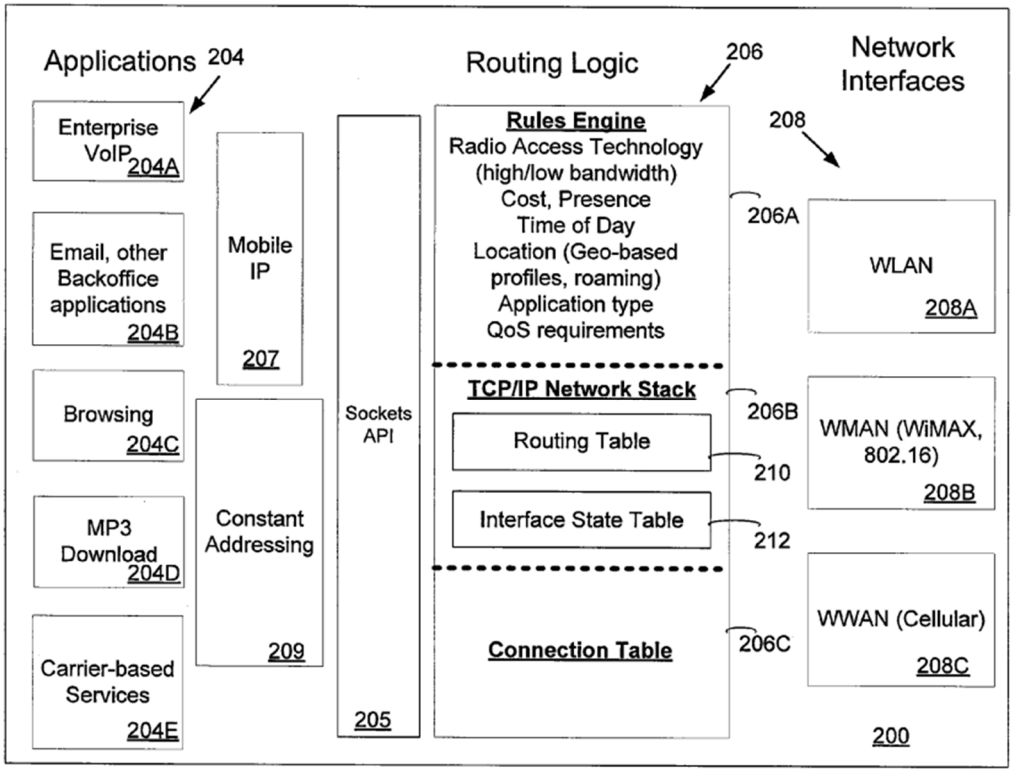

Figure 2

Device 102 includes "a plurality of applications 204, routing logic 206, and network interfaces 208." SAMSUNG-1007, [0025]. Routing logic 206 includes rules engine 206A as a "policy-based mechanism using rules to configure TCP/IP network stack 206B and connection table 206C to coordinate communications for applications 204 using communications interfaces [208]." *Id.*, [0027]. For example, "a rule is a specific policy that is entered in the 'rules engine' for carrying out the policy." *Id.*; SAMSUNG-1003, ¶¶51-52.

Network interfaces 208 include interfaces for "WLAN 208A, WMAN 208B and WWAN 208C network communications," and optionally, "short-range wireless interfaces" and "interface(s) for wired network communications." SAMSUNG-1007, [0028]. Rules engine 206A "configures the communication operations with a set of rules/policies" for various factors, e.g., "radio access technology…cost, presence, time of day, location…, destination IP address, application type, and Quality of Service (QoS) requirements." *Id.*, [0029]; SAMSUNG-1003, ¶53.

Further, rules engine 206A "configures (i.e. modifies, periodically in response to changes of state and the evaluation of its rules) connection table 207C and routing table 210 to optimize the flow of communications over multiple communications modes (e.g., interfaces 208 and respective networks 104 and 106)." SAMSUNG-1007, [0033]. On a state change, e.g., "time of day," "connecting/disconnecting of device 102 with a specific network 104 and 106," rules engine 206A executes and modifies "routing table 210 to ensure that data goes out to the most appropriate network (via respective network interface 208)." *Id.*, [0035]. Rules engine 206A further "determine[s] which interface would be best to service a particular application." *Id.*; SAMSUNG-1003, ¶54.

(b) *Combination*

As described in §III.A.1(c), a POSITA would have configured Rao-Oestvall

to apply policies to prioritize packet transmission and application functionality to achieve several types of operational efficiencies. SAMSUNG-1005, [0179]-[0195], FIG. 5A. In implementing this combination, a POSITA would have recognized opportunities to provide additional efficiencies in scenarios where Rao-Oestvall has access to multiple networks. *Id.* This would have motivated a POSITA to seek solutions beyond Rao and Oestvall to achieve such additional efficiencies. *Id.*; SAMSUNG-1003, ¶132.

Given Montemurro's focus to "optimize communications using a policy-based mechanism to configure connections and routes," a POSITA would have found Montemurro's teachings to be applicable to the policies applied by Rao-Oestvall for prioritization. SAMSUNG-1003 ¶133. Indeed, Like Oestvall, Montemurro describes embodiments where its policies are used to "disable or enable an application for a user." SAMSUNG-1007, [0027]. This would have led a POSITA to consider Montemurro's teachings in Figure 2 relating to "policy-based data routing for multimode operations." *Id.*, [0024], [0024]. Incorporation of such teachings into Rao-Oestvall would have yielded several improvements described in Montemurro, such as the ability to "offer different usage models depending on the mode of wireless operation selected." *Id.*, [0003]. This configuration would have improved Rao-Oestvall by enabling prioritization to further account for several considerations, such as "bandwidth, range, cost, and

power consumption." *Id*. Further, policies applied by Rao-Oestvall-Montemurro would have been "responsive to various factors such as Radio Access Technology (high/low bandwidth), cost, presence, time of day, location, application type and quality of service (QoS) requirements among others to optimize communications," as described in Montemurro. *Id.*, [0011].

Thus, a POSITA would have found it obvious to combine Rao-Oestvall and Montemurro and would have understood that the proposed combination involves (1) combining prior art elements according to known methods to yield predictable results; and (2) use of a known technique to improve similar devices (methods, or products) in the same way. *KSR*, 550 U.S. 398, 415-421; MPEP 2143; SAMSUNG-1003, ¶134.

2. Analysis

[5]

Rao-Oestvall-Montemurro would have applied a rules engine to coordinate connectivity for applications. SAMSUNG-1007, [0027]. As described in §III.B.1, in certain scenarios, a rules engine would have applied an instance of a routing table ("***multimode profile***") with information for multiple networks available for selection. *Id.*, [0030]. For example, "if both the WLAN and WWAN radios…of [a] device [] are connected to their respective networks 104 and 106, there will be a route associated with each network 104 and 106…" *Id.* The rules engine

"executes" the instance of the routing table "to ensure that data goes out to the most appropriate network" and also to "determine which interface would be best used to service a particular application." *Id.*, [0035]; SAMSUNG-1003, ¶135.

Further, in scenarios where multiple networks are available for selection, POSITA would have understood and found obvious that the information specified by the instance of the routing table includes policies for each available network. SAMSUNG-1003, ¶136. In Montemurro, policies are "responsive to various factors such as Radio Access Technology, high/low bandwidth, cost, presence, time of day, location, application type and quality of service (QoS) requirements." SAMSUNG-1007, [0011], [0024], [0027], [0029]. Thus, a POSITA would have understood and found obvious that an instance of the routing table with information for multiple network available for selection includes "***different policies for different networks***." SAMSUNG-1007, [0011], [0024], [0027], [0029]; SAMSUNG-1003, ¶136. Moreover, the use of different policies for enabling capabilities for different networks (e.g., phone network, local network) was conventional by the Critical Date. *Id.*, ¶137 (citing SAMSUNG-1026, 12:13-13:9).For example, Dive-Reclus (SAMSUNG-1026) includes a table showing different permission decisions for applications submitting API calls to request network access.

Installed	PhoneNetwork	ReadUserData	WriteUserData	LocalNetwork	Certificate
Good.exe	Not granted	Granted	Not granted	Granted	Checked OK – click to view root signing cert
Bad.exe	Not granted	Not granted	Not granted	Not granted	Unsigned

SAMSUNG-1026, 20

[6]

[5], *supra*. A POSITA would have also understood and found obvious that, in some scenarios, information specified by an instance of the routing table ("***multimode profile***") includes "***different policies for different networks***." SAMSUNG-1007, [0011], [0024], [0027], [0029]. The rules engine "executes" the instance of the routing table "to ensure that data goes out to the most appropriate network" and also to "determine which interface would be best used to service a particular application." *Id.*, [0035]. For example, "if both the WLAN and WWAN radios…of [a] device [] **<u>are connected</u>** to their respective networks 104 and 106, there will be a route associated with each network 104 and 106…" *Id.*, [0030]. Thus, in this example, a POSITA would have understood and found obvious that the rules engine within Rao-Oestvall-Montemurro would have executed the instance of the routing table based on types of current network connections of a

device (WLAN, WWAN), and thus, when a routing option is selected from the routing table instance, the selection ("***select a traffic control policy***") is based on the types of current network connections of the device ("***type of network connection currently in use by the device***"). SAMSUNG-1003, ¶¶138-139. Moreover, as discussed for [1.8(a)] (Ground 1A), Oestvall incorporates by reference Dive-Reclus, which teaches permission decisions regulating network access by third-party applications that use API calls. SAMSUNG-1006, [0020]; SAMSUNG-1026, 16:23-17:28, 20.

[7]

Montemurro offers an example in which, "if both the WLAN and WWAN radios…of [a] device [] are connected to their respective networks 104 and 106, there will be a route associated with each network 104 and 106…" SAMSUNG-1007, [0030]. Thus, in this example, a POSITA would have understood and found obvious that the rules engine within Rao-Oestvall-Montemurro would have executed the instance of the routing table ("***select a traffic control policy***") when the device is connected to a WLAN connection ("***when the type of network connection is at least one type of WLAN connection***"). SAMSUNG-1003, ¶140.

Further, Montemurro references a "local LAN" and a POSITA would have understood and found obvious that the "local LAN" is a type of "***network connection from the WLAN to the Internet***." SAMSUNG-1003, ¶141;

SAMSUNG-1007, [0039]. A POSITA would have also understood and found obvious that Rao-Oestvall-Montemurro enables connectivity to several types of network connections implemented by network components in the combination (e.g., base station, WLAN components, access points, etc.) between the WLAN and Internet such that the device considers a "***type of WLAN connection***" in "***selecting a traffic control policy***," as discussed above. SAMSUNG-1003, ¶141 (citing SAMSUNG-1007, [0013]).

[11]

In Rao-Oestvall-Montemurro, policies are "responsive to various factors" (SAMSUNG-1007, Abstract), including "cost, presence, time of data, location, e.g., geo-based policies, network roaming." (SAMSUNG-1007, [0029]). Montemurro also offers non-limiting disclosure of WWAN, including examples of "cellular technologies," which a POSITA would have understood and found obvious includes roaming WWAN networks and home WWAN networks. SAMSUNG-1003, ¶142; SAMSUNG-1007, [0011], [0024], [0027], [0029]. A POSITA would have perceived selection of a policy in Rao-Oestvall-Montemurro to provide connectivity to one of several available WWAN networks ("***apply the first differential policy***" to "***one of***" "***a connection to a roaming WWAN network and a connection to a home WWAN network***") to represent an obvious configuration as this reduces costs and complexity, consistent with Montemurro's

teachings. SAMSUNG-1007, [0029]-[0038]; SAMSUNG-1003, ¶¶143-144 (citing SAMSUNG-1022, [0003], [0004]; SAMSUNG-1023, [0043], FIG. 3).

[17]

In Rao-Oestvall-Montemurro, policies are "responsive to various factors," (SAMSUNG-1007, Abstract), including "cost, presence, time of data, location, e.g., geo-based policies, network roaming" (*id.*, [0029]). Further, the rules engine "executes" the instance of the routing table to "ensure that data goes out to the most appropriate network (via respective network interface)" and "interacts with the connection API's to determine which interface would be best used to service a particular application." *Id.*, [0035]. Thus, a POSITA would have understood and found obvious that Rao-Oestvall-Montemurro regulates access to connection events to several networks, including a WWAN network ("***WWAN network access events***"). SAMSUNG-1003, ¶145.

Further, as discussed above for [1.8(a)]-[1.8(c)] and §III.A.1(c), Rao-Oestvall-Montemurro would have regulated network access by applications through use of policies. In Montemurro, "[p]olicies may be responsive to various factors," including "time of day." SAMSUNG-1007, Abstract. A POSITA would have understood and found obvious that a policy applied by Rao-Oestvall-Montemurro regulates both the type of network access and the circumstances during which an application can have access to network services such that Rao-

Oestvall-Montemurro "***can only have WWAN network access during particular time windows***" (e.g., time windows during which a policy specifies network connectivity). SAMSUNG-1003, ¶146; SAMSUNG-1007, [0035]; SAMSUNG-1006, [0023]. Moreover, use of policies to limit network access during particular time windows were Conventional by the Critical Date. SAMSUNG-1003, ¶147 (citing SAMSUNG-1010, 10:13-17, 30:59-67).

[18]

As discussed in §III.B.1, policies applied by Rao-Oestvall-Montemurro (including the "***first differential traffic control policy***") would have been "responsive to various factors such as Radio Access Technology (high/low bandwidth), cost, presence, time of day, location, application type and quality of service (QoS) requirements among others to optimize communications," as described in Montemurro. SAMSUNG-1007, [0011]; SAMSUNG-1003, ¶148.

In Montemurro, "network infrastructure" provides support for services provided to a wireless device. SAMSUNG-1007, [0014]. Examples of "network infrastructure" include "a gateway server, a provisioning server, a discovery, and an application repository," each of which are examples of a "***network element***." SAMSUNG-1003, ¶149. Services provided by the network infrastructure include "Administrative and Management Service dealing with policies, such as those specifying allowed applications for users, services available to applications and

more." SAMSUNG-1007, [0015]-[0016]. Moreover, in Rao, remote access client 120 may "receive an indication of network congestion" and thereby "control[] and manage[] the prioritization of network communications," which would have adjusted policy evaluation by the device. SAMSUNG-1005, [0195]. A POSITA would have understood and found obvious, where a server ("***network element***") provides an update for a service dealing with policies, Rao-Oestvall-Montemurro updates policies relating to application operation ("***update the first differential traffic control policy***") based on the update from the server ("***information received from [the] network element***"). SAMSUNG-1003, ¶149. For example, the update may specify a new allowed application, and Rao-Oestvall-Montemurro would have updated policies to reference a name of the new allowed application and thereby permit regulation of the newly allowed application, consistent with Rao. SAMSUNG-1005, [0182]. Moreover, techniques for adapting policy configurations based on information received from network elements were conventional by the Critical Date. SAMSUNG-1003, ¶150-151 (citing SAMSUNG-1010, Abstract, 5:9-12, 28:6-16).

[23]

In Rao-Oestvall-Montemurro, "if both the WLAN and WWAN radios…are connected to their respective networks 104 and 106, there will be a route associated with each network 104 and 106" (below). SAMSUNG-1007, [0030];

id., [0011], [0024], [0027], [0029]; SAMSUNG-1003, ¶152.

Source IP	Destination IP	Device Interface (208)
192.168.1.20	0.0.0.0	WLAN (208A)
67.69.20.142	0.0.0.0	WWAN (208C)

In Montemurro, a device "has mobile IP capabilities" to "permit the device to attach to the Internet (IP network) via a home and one or more foreign networks." SAMSUNG-1007, [0037]. Since Montemurro contemplates devices with capabilities to connect to both home and foreign networks, a POSITA would have found obvious that the routing table may be similarly configured to provide routing options for various types of networks, including a "***home WWAN***" and "***roaming WWAN***." SAMSUNG-1003, ¶153; SAMSUNG-1007, [0037].

Moreover, since Montemurro's device is operable on various networks (including WWAN), a POSITA would have understood and found it obvious that the routing table is similarly configured to provide routing options for WWAN for a home network ("***home WWAN***") and WWAN for roaming to a foreign network ("***roaming WWAN***"). SAMSUNG-1003, ¶154; SAMSUNG-1007, [0030], [0037]. Indeed, by the Critical Date, WWAN was well-known for being implemented for different settings, such as a home WWAN and a roaming WWAN. SAMSUNG-1003, ¶154. Montemurro further offers non-limiting disclosure of WWAN, e.g.,

"cellular technologies," which a POSITA would have understood and found obvious includes roaming WWAN networks and home WWAN networks. SAMSUNG-1007, [0029]-[0038]. A POSITA would have perceived network selection in Rao-Oestvall-Montemurro to provide connectivity to one of several available WWAN networks ("***connect to a home WWAN and a roaming WWAN***") to represent an obvious configuration as this reduces costs and complexity, consistent with Montemurro. SAMSUNG-1003, ¶154. For example, it was well-known and obvious to use and make selective connection to a home network (e.g., "***home WWAN***") and a roaming network (e.g., "***roaming WWAN***"). SAMSUNG-1003, ¶155; SAMSUNG-1022, [0003].

Further, in Montemurro, each policy specifies a set of connection factors, such as "Radio Access Technology, high/low bandwidth, cost, presence, time of day, location, application type and quality of service (QoS) requirements." SAMSUNG-1007, [0011]. A POSITA would have understood and found obvious that a set of connection factors specified within a policy represents a "***sub-policy***" in that they permit connectivity to an associated network, and thereby enable Montemurro's "policy-based mechanism to configure connections and routes." *Id*., Abstract. Thus, in an instance of the routing table with routing options for a home network and a foreign network, the routing table includes a first set of connection factors for the home network ("***first sub-policy***") and a second set of

connection factors for the foreign network ("***second sub-policy***"). SAMSUNG-1007, [0011], [0024], [0027], [0029]; SAMSUNG-1003, ¶156. Further, in Rao, policies may be "specified hierarchically to account for multiple applications" and/or "multiple protocols that may be executed on [a] client [] at any point," demonstrating that hierarchical policy structures for adjusting the types of device functionality provided by Rao-Oestvall-Montemurro were conventional by the Critical Date. SAMSUNG-1005, [0182].

[24]

As discussed for [23], a POSITA would have understood and found obvious configurations of Rao-Oestvall-Montemurro where an instance of the routing table with routing options for different types of networks (e.g., home network, foreign network). SAMSUNG-1003, ¶157. Montemurro identifies several types of WWAN, e.g., "GSM/GPRS EDGE, UTMS, HSPA, CDMA, WCDMA" SAMSUNG-1007, [0003]. Given the types of examples identified, a POSITA would have understood and found obvious that various instances of the routing table may be configured to accommodate "***three different network types from the network types consisting of 2G, 3G, 4G, home, and roaming***." SAMSUNG-1003, ¶157; SAMSUNG-1007, [0022], [0029], [0037].

[26]

[24], *supra*. Montemurro identifies several types of WWAN, including

"cellular technologies." SAMSUNG-1007, [0003]. Policies are "responsive to various factors" (*id.*, Abstract) including "network roaming" (*id.*, [0029]). Further, the rules engine "executes" the routing table to "ensure that data goes out to the most appropriate network (via respective network interface)" and "interacts with the connection API's to determine which interface would be best used to service a particular application." *Id.*, [0035]. Given such non-limiting disclosure and the types of examples identified, a POSITA would have understood and found obvious that an instance of the routing table includes "***information on whether a connected WWAN is a roaming network or a non-roaming network***." SAMSUNG-1003, ¶158; SAMSUNG-1007, [0022], [0029], [0037].

[29]

As discussed for [1.8(a)], in Rao-Oestvall, an improved agent would have leveraged several types of APIs (including the recited "***API***") in regulating applications. SAMSUNG-1005, [0110], [0166], [0190], [0205]; SAMSUNG-1003, ¶159; SAMSUNG-1020, 3-4. As described for [1.8(a)] (Ground 1A), Oestvall incorporates by reference Dive-Reclus, which teaches permission decisions regulating network access by third-party applications that use API calls. SAMSUNG-1006, [0020]; SAMSUNG-1026, 16:23-17:28, 20. A POSITA would have found it obvious that a permission decision denying network access results in "***transition to a different state***" (e.g., permitted network access, restricted network

access), which is communicated to the application through a corresponding API ("***API instructs the first end-user application***"). SAMSUNG-1006, [0020]; SAMSUNG-1026, 16:23-17:28, 20.

Further, Montemurro provides techniques that cause an application to transition to a different state, e.g., "[s]ome access technology switches will result in IP address changes" so "an application using the connection needs to be aware of the IP address, the change may not be transparent and may need to be communicated to (or otherwise discoverable by) the application." SAMSUNG-1007, [0048]. In another example, connection "differences are significant (e.g. between GSM/GPRS and WAN 802.11 technologies)" so "an application may need to tailor its behaviour to account for the new access technology in use" such as "[b]uffer sizes, re-transmission timers etc." that "may need to be changed." *Id.* A POSITA would have understood and found obvious scenarios where an application tailors its behavior (e.g., IP address changes, altered buffer sizes, and modified re-transmission timers) are examples of application transitions to different states. SAMSUNG-1003, ¶160.

Thus, when an application state changes such that a network access condition adjusts the application's permission to access network resources, a POSITA would have understood and found obvious that, in Rao-Oestvall-Montemurro, an API instructs the application to transition states relating to the

network access condition ("***API instructs the first end-user particular application to transition to a different state***"). SAMSUNG-1003, ¶¶161-162 (citing SAMSUNG-1020, 3-4); SAMSUNG-1005, [0106], [0166], [0190]); SAMSUNG-1001, 73:47-54.

C. [GROUND 1C] – Rao-Oestvall-Araujo Renders Claims 12, 15, 21, and 22 Obvious

1. Rao-Oestvall-Araujo

(a) *Araujo*

Araujo describes "a power-management policy" for managing a "machine's power usage." SAMSUNG-1011, Abstract. The policy can be implemented on "[e]lectronic devices," such as "computers, wireless telephones, audio/video equipment, etc." *Id.*, [0014]. The policy is applied to "justify [a program] consuming power, depending on what the program is doing." *Id*, [0004]. By implementing this policy, a device can better "use the energy in a way that strikes a balance between providing functionality and maintaining longevity of the charge." *Id.,* [0001]; SAMSUNG-1003, ¶¶55-56.

In Araujo, programs are classified using various criteria, and selectively provided resources based on their classifications. SAMSUNG-1011*,* [0027]. A program's ability to consume power is "based on a finding as to whether the program's status justifies the consumption of power under the circumstances that are present." *Id.* For example, a "very important person" (VIP) status allows a

program to "consume power in situations where other programs would not be permitted to consume power." *Id.*; SAMSUNG-1003, ¶57.

Further, a device can provide resources to the applications differently, based on whether the applications are "worthy" to consume power. SAMSUNG-1011, [0024]. A program can generate "a request to perform an action using a particular device, such as "a request to send data over a wireless network." *Id.,* [0020], [0024]; SAMSUNG-1003, ¶58. The device can then perform various responsive operations, including allowing the request (SAMSUNG-1011, [0035]; FIG. 3, 302) and blocking the request (*Id.*, [0035], [0050]; FIG. 4, 406).

The responsive operations are provided by a "request deflector component" that is "interposed" between a "program" and a "driver" of a "device," and configured to "intercept[] requests and respond[] to the requests based on power management considerations before the request reach[es] a device driver." SAMSUNG-1011, [0024], [0050]; SAMSUNG-1003, ¶¶59-61. Figure 6 (below) shows an example of the "request deflector component":

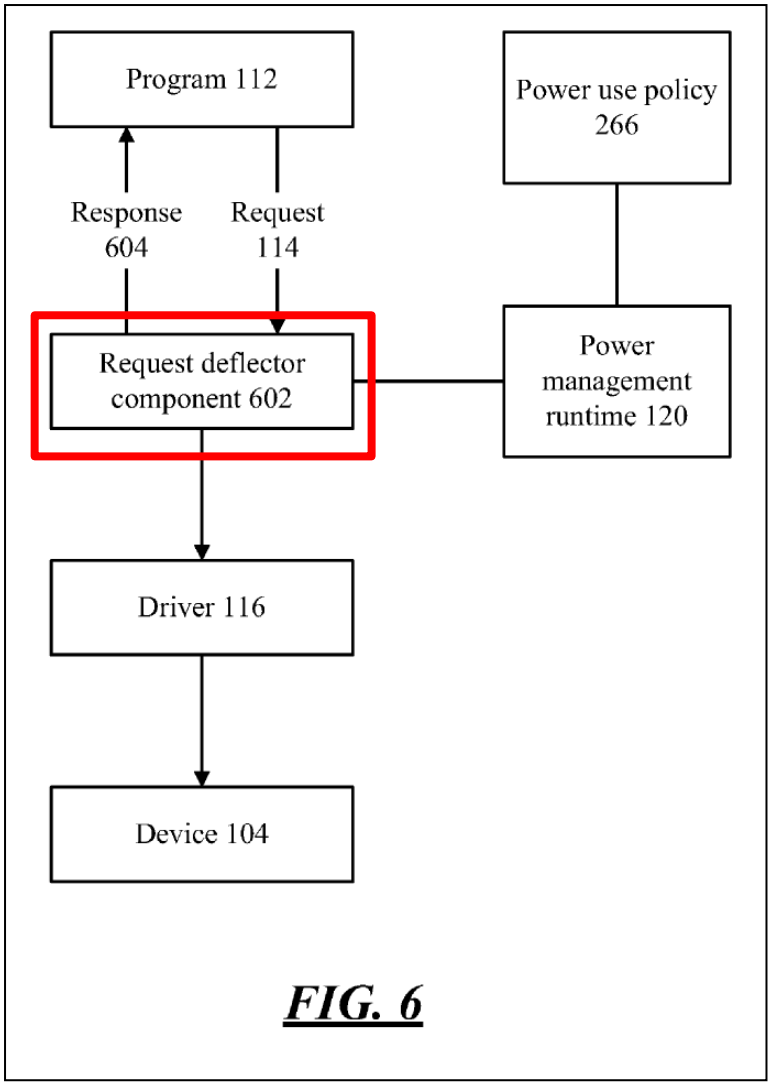

SAMSUNG-1011, FIG. 6 (annotated)

(b) *Combination*

A POSITA would have found it obvious to modify Rao-Oestvall to include Araujo's "request deflector component" to provide a combination that better "use[s] the energy in a way that strikes a balance between providing functionality and maintaining longevity of the charge." SAMSUNG-1011, [0001]; SAMSUNG-1003, ¶163.

As discussed in §III.A.1(c), Rao-Oestvall provides functionality to control an application's network access by intercepting network packets, determining packet prioritization based on the application, and selectively communicating packets to the network based on the packet prioritization. In Rao, these prioritization operations can be performed by one or more "network drivers of a network stack 310" (e.g., by "customiz[ing], modif[ying] or adapt[ing]" the network drivers "to provide a custom or modified portion of the network stack 310 in support of any of the techniques"). SAMSUNG-1005, [0100]. For example, the Rao-Oestvall system can include "[a] filter 322 [to] place, arrange, or coordinate network packets into queues 540a-540n in support of the priorities," and these "queues 540a-540n may be included in a network driver, such as an NDIS driver for the filter 322." *Id.*, [0143], [0180], [0191]; SAMSUNG-1003, ¶164.

In implementing such functionality, a POSITA would have perceived opportunities for improving the interception capabilities already present in Rao to impart additional advantages, such as increasing energy efficiency. SAMSUNG-1003, ¶165. To this aspect, a POSITA would understood and found obvious that well-known monitoring capabilities may be useful to reduce power consumption and thereby increase the longevity of techniques provided by Rao-Oestvall while its device operates on battery power. *Id.* A POSITA would have thereby looked to Araujo's "request deflector component," which is "interposed" between each

application and network driver, to selectively allow or block an application from transmitting data to the network. SAMSUNG-1011, [0050]. Incorporation of functionality of Araujo's "request deflector component" into Rao-Oestvall would have enabled assignment of a "status" to an application, use of that status to determine if allowing an application request "justifies the consumption of power under the circumstances that are present," and regulation (e.g., blocking, allowing) of the request based on that determination. *Id.*, [0027]. Such a configuration would have thereby enjoyed the benefits of better using "energy in a way that strikes a balance between providing functionality and maintaining longevity of the charge." *Id.*, [0001].

For example, in modifying Rao-Oestvall to incorporate Araujo's teachings, a POSITA would have "interposed" Araujo's "request deflector component" between applications and the network driver implementing Rao's packet prioritization functionality (e.g., a network driver implementing the packet capture mechanism 364, filter 322, and queues 540a-540n). SAMSUNG-1003, ¶166. For example, a POSITA would have arranged Araujo's "request deflector component" to process network packets after an application providing the network packets for transmission has otherwise been deemed by Oestvall's window server component to be running in the foreground (and thereby having access to device resources). SAMSUNG-1006, [0025]. This configuration would have enabled further

assessment of whether the application can access the network (e.g., in addition to considering whether an application has exceeded application-specific data limitations) in order to further enhance the efficiency of the Rao-Oestvall-Araujo combination. SAMSUNG-1003, ¶166.

A POSITA would have configured the "request deflector component" to determine whether each of the applications has a "status [that] justifies the consumption of power under the circumstances that are present," and selectively allow or block the network packets from proceeding to the network driver based on the determination. SAMSUNG-1003, ¶167. For example, upon determining that the application's status justifies the consumption of power, the "request deflector component" would allow the network packets to proceed to the network driver for prioritization. Alternatively, upon determining that the application's status does not justify the consumption of power, the "request deflector component" would block the network packets from reaching the network driver, either permanently or temporarily. The "request deflector component" would have thereby provided an additional layer of control for regulating each of the applications' access to the network (e.g., to supplement the regulation techniques already present in Rao and Oestvall). *Id*.

Finally, a POSITA would have had a reasonable expectation of success in modifying Rao-Oestvall to incorporate Araujo. SAMSUNG-1003, ¶¶168-169.

The combination would have involved (1) combining prior art elements according to known methods to yield predictable results; and (2) use of a known technique to improve similar devices (methods, or products) in the same way. *KSR,* 550 U.S. 398, at 415-421.

2. Analysis

[12]

In Rao-Oestvall-Araujo, power management is based on monitoring, for example, power consumption ("***power state***"). SAMSUNG-1011, Abstract, [0004]. Rao-Oestvall-Araujo would have enabled changes to the way applications operate based on monitoring a power state, which a POSITA would have understood and found obvious involves, in some instances, adjusting a policy enforcement by Rao-Oestvall-Araujo for prioritization ("***dynamically change the application of the first differential traffic control policy***"). SAMSUNG-1011, [0031], [0046]; SAMSUNG-1003, ¶170. For example, "[a] power state change may be sought in order to turn on a device, or to raise the power state of a device, in order to allow the device to service a request from an application." SAMSUNG-1011, [0038]. In response, the Rao-Oestvall-Araujo device would respond by "block[ing] the request" and the "program may receive an error code or result code." *Id.*, [0040]. One type of request is a network packet transmission request described in Rao, and a POSITA would have understood and found obvious that

blockage of the request would have resulted in the Rao-Oestvall-Araujo device selecting and/or applying a different policy for prioritization (e.g., selecting a policy that prioritizes packet transmissions of another application that would not necessitate a power state change). SAMSUNG-1005, [0182].

[15]

As discussed for [12], a POSITA would have understood and found obvious that Rao-Oestvall-Araujo adjusts policy enforcement for prioritization in certain circumstances involving a power state change. Araujo further describes that "power may be controlled for devices," such as "disks, **network adapters**, processors, monitors." SAMSUNG-1011, [0018]. A POSITA would have understood and found obvious that a modem is an example of network adapter, and thus, Rao-Oestvall-Araujo would have provided power management for "***one or more modems***." SAMSUNG-1003, ¶171. A POSITA would have therefore understood and found obvious that, in some instances, Rao-Oestvall-Araujo adjusts a policy enforcement by Rao-Oestvall-Araujo for prioritization based on a power state change for a modem ("***dynamically change the application of the first differential traffic control policy***"). SAMSUNG-1011, [0031], [0046]; SAMSUNG-1003, ¶172 (citing SAMSUNG-1009, [0088]-[0091]).

[21]

As discussed for [1.8(a)], Rao-Oestvall would have provided an improved

agent that uses one or more APIs as a "means" or "mechanism" to provide communications relating to prioritization. SAMSUNG-1003, ¶173; SAMSUNG-1005, [0110], [0166], [0190], [0205]. Further, in Rao, communications related to prioritization may be accomplished using any "form or interface known to those ordinarily skilled in the art." SAMSUNG-1005, [0190]. Thus, based on these non-limiting disclosures in Rao, a POSITA would have found obvious that, in incorporating Araujo's "request deflector component" into Rao-Oestvall (§III.D.1(c)), certain exemplary configurations involve the "request deflector component" being implemented to provide communications functionality as an API. SAMSUNG-1003, ¶173. Thus, the "request deflector component" renders the "***API***" obvious insofar as the "request deflector component" in Rao-Oestvall-Araujo would have provided the functionality recited in the claim (e.g., emulating network messaging) as being performed by the API, as further addressed below. *Id*.

Indeed, APIs that were configured to provide emulating network messaging functionality between applications and drivers were well-known as of the Critical Date. SAMSUNG-1003, ¶174 (citing SAMSUNG-1015, Abstract, FIG. 2, 3:46-5:10; SAMSUNG-1011, [0001], [0027], [0050]; SAMSUNG-1016, 1, 3). Moreover, the use of APIs to regulate network communications within a layered computing architecture was similarly well-known before the Critical Date.

SAMSUNG-1003, ¶174 (citing SAMSUNG-1017, 11); SAMSUNG-1001, 91:25-67.

Further, as discussed in §III.D.1(c), in Rao-Oestvall-Araujo, "if the power state change is not allowable under [a] policy," the device can "block the request" and "notif[y] [the program] that the request will not be processed." SAMSUNG-1011, [0038], [0041]. Further, "[t]he program may also be notified that the reason for the request is that the device is off[,]" e.g., "the program may receive an error code or result code indicating that the request calls for a device that is not turned on." *Id.*; *see id.*, [0017]. A POSITA would have understood and found obvious that Rao-Oestvall-Araujo would have responded to an intercepted request by an application by notifying the application that the request will not the processed and/or transmitting an error code or result code to the application ("***emulating network messaging***"). SAMSUNG-1003, ¶175. In doing so, the combined device would have provided the application with a greater degree of information regarding its attempt to access a network, as taught by Araujo. *Id*.

Moreover, Araujo's use of an "error code or result code" is consistent with the '976 patent specification's disclosure of an "emulated network API" that blocks an application's connection attempt and sends "a message…back to the application" regarding the blocking, such as a message that "the application will understand and can interpret to indicate that the network access attempt was not

allowed/blocked, that the network is not available, and/or to try again later for the requested network access." SAMSUNG-1001, 91:25-49; SAMSUNG-1003, ¶176.

[22]

As discussed for [21], a POSITA would have configured Rao-Oestvall-Araujo to respond to an intercepted request by an application by notifying the application that the request will not the processed and/or transmitting an error code or result code to the application ("***emulating network messaging***"). Further, as discussed in §III.D.1, Rao-Oestvall-Araujo would have incorporated Araujo's "request deflector component" to "intercept[] requests and respond[] to the requests based on power management considerations before the requests reach a device driver." SAMSUNG-1011, [0024], [0050]; SAMSUNG-1003, ¶177.

A POSITA would have also understood and found obvious to configure Rao-Oestvall-Araujo such that, in blocking a request from reaching the network driver, the request is prevented from being provided to Rao's "network stack" (which includes "one or more network drivers supporting the one or more layers" of the network stack) ("***blocking the request from passing to a network stack***"). SAMSUNG-1005, [0100]; SAMSUNG-1003, ¶178.

Further, in Rao-Oestvall-Araujo, "if the power state change is not allowable under the policy," the device can "block the request" and "notif[y] [the program] that the request will not be processed." SAMSUNG-1011, [0038], [0041].

Further, "[t]he program may also be notified that the reason for the request is that the device is off[,]" e.g., "the program may receive an error code or result code indicating that the request calls for a device that is not turned on" ("***...and returning to the particular application a message indicating the network request was not successful***"). *Id.*, [0017]; SAMSUNG-1003, ¶179.

IV. PTAB DISCRETION SHOULD NOT PRECLUDE INSTITUTION

A. 35 U.S.C. § 325(d)

Discretionary denial under the Board's §325(d) Advanced Bionics analysis is not warranted. IPR2019-01469, Paper 6, 8-9 (PTAB Feb. 13, 2020) (precedential) ("*Advanced Bionics*").

None of the prior art references advanced in this Petition was previously before the Office. While relatives of Rao (WO2006/012610A2 ("Rao-2")) was cited on the face of the '976 patent, there is no evidence that the Office substantively considered these references among the references listed on the first 10 pages of the '976 patent. SAMSUNG-1002. Moreover, the same or substantially the same arguments were not previously presented to the Office. *Id*. Indeed, there could be no overlap between the arguments made before the Office because the Examiner issued no prior art rejections during prosecution.

To the extent it is argued that the same or substantially the same art or arguments were previously presented to the Office, the second prong is not met.

Advanced Bionics, 8-10. The Examiner issued no prior art rejections and included no substantive discussion of any prior art reference. SAMSUNG-1002, 21. Therefore, although Rao-2 was cited on the face of the '976 patent, none of Rao, or Rao-2, or the obviousness of the Challenged Claims in view of those references was ever addressed during prosecution. As highlighted in Grounds 1A-1C, the Examiner clearly did not appreciate Rao's disclosures and how those references in combination and in combination with other prior art references not previously before the Office (Montemurro, Oestvall, Araujo) render the Challenged Claims obvious. Moreover, Samsung has shown a reasonable likelihood that it would prevail that at least one of the Challenged Claims is unpatentable over the applied art based on the current record. *Supra* §IIIA-C; PGR2022-00010, Pap. 9, 8-9 (PTAB June 6, 2022). As such, Samsung has demonstrated material error by the Office, and discretionary denial is not warranted.

B. 35 U.S.C. §314(a)

In *Apple Inc. v. Fintiv, Inc.*, the Board enumerated six factors to determine whether a petition should be discretionarily denied institution under §314(a). IPR2020-00019, Pap. 11, 2-3 (PTAB "precedential" Mar. 20, 2020) ("*Fintiv*"). In June 2022, the USPTO issued updated discretionary denial guidance in view of the *Fintiv* factors and expressly noted that ***the PTAB will not discretionarily deny institution if Petitioner presents a Sotera stipulation.*** SAMSUNG-1031, 3, 7-8.

Here, Samsung has eliminated any risk of duplicated effort by voluntarily presenting a *Sotera* stipulation to Headwater. SAMSUNG-1032; IPR2020-0109, Pap. 12 (PTAB Dec. 1, 2020). For at least this reason, the Board should not discretionarily deny this petition.

Although the Board need not address additional *Fintiv* factor considerations in light of Samsung's *Sotera* stipulation, indeed, the *Fintiv* factors do not favor denial.

Factor 1 is neutral because neither party has requested a stay in co-pending litigation.

Factor 2 is neutral because the Court's trial date is speculative at this point and subject to change. The Board will likely issue its Final Written Decision around February 2025, approximately six months after the currently scheduled trial date (August 5, 2024). SAMSUNG-1030, 1. However, as the Board and Director have previously recognized, "scheduled trial dates are unreliable and often change." SAMSUNG-1031, 8.

Factor 3 also favors institution because Petitioner has diligently filed this Petition months ahead of the one-year time bar, while the EDTX Litigation is still in its early stages. Beyond exchanging preliminary infringement/invalidity contentions, the parties and the District Court have yet to expend significant resources on invalidity. SAMSUNG-1030, 5.

Factor 4 also favors institution because Petitioner has provided a *Sotera* stipulation. SAMSUNG-1032.

Factor 5: The parties in the parallel EDTX litigation are the same.

Factor 6 favors institution because the merits of this Petition are compelling, as described in this Petition.

V. CONCLUSION AND FEES

The Challenged Claims are unpatentable. Samsung authorizes charge of fees to Deposit Account 06-1050.

VI. MANDATORY NOTICES UNDER 37 C.F.R § 42.8(a)(1)

A. Real Party-In-Interest Under 37 C.F.R. § 42.8(b)(1)

Samsung Electronics Co., Ltd. and Samsung Electronics America, Inc. (collectively, "Samsung") are the real parties-in-interest.

B. Related Matters Under 37 C.F.R. § 42.8(b)(2)

The '976 patent is the subject of a civil action, *Headwater Research LLC v. Samsung Electronics Co., Ltd. et al.*, 2:22-cv-00422, E.D. Tex., filed November 30, 2022 (SAMSUNG-1004; SAMSUNG-1033). Samsung and Headwater are also involved in case nos. 2:22-cv-00467 and 2:23-cv-00103, also in E.D. Tex.

Samsung is not aware of any other disclaimers, reexamination certificates, or IPR petitions addressing the '976 patent.

C. Lead And Back-Up Counsel Under 37 C.F.R. § 42.8(b)(3)

Samsung provides the following designation of counsel.

Lead Counsel	Backup counsel
W. Karl Renner, Reg. No. 41,265 Fish & Richardson P.C. 60 South Sixth Street, Suite 3200 Minneapolis, MN 55402 Tel: 202-783-5070 Fax: 877-769-7945 Email:IPR39843-0158IP1@fr.com	Jeremy J. Monaldo, Reg. No. 58,680 Ryan Chowdhury, Reg. No. 74,466 60 South Sixth Street, Suite 3200 Minneapolis, MN 55402 Tel: 202-783-5070 Fax: 877-769-7945 PTABInbound@fr.com

D. Service Information

Please address all correspondence and service to the address listed above. Samsung consents to electronic service by email at IPR39843-0158IP1@fr.com (referencing No. 39843-0158IP1 and cc'ing PTABInbound@fr.com, axf-ptab@fr.com, jjm@fr.com, and rchowdhury@fr.com).

Respectfully submitted,

Dated August 11, 2023

/Jeremy J. Monaldo/

W. Karl Renner, Reg. No. 41,265
Jeremy J. Monaldo, Reg. No. 58,680
Ryan Chowdhury, Reg. No. 74,466
Fish & Richardson P.C.
60 South Sixth Street, Suite 3200
Minneapolis, MN 55402
T: 202-783-5070
F: 877-769-7945

(Control No. IPR2023-01253)

Attorneys for Samsung

CERTIFICATION UNDER 37 CFR § 42.24

Under the provisions of 37 CFR § 42.24(d), the undersigned hereby certifies that the word count for the foregoing Petition for *Inter Partes* Review totals 13,955 words, which is less than the 14,000 allowed under 37 CFR § 42.24.

Dated August 11, 2023

/ Jeremy J. Monaldo/

W. Karl Renner, Reg. No. 41,265
Jeremy J. Monaldo, Reg. No. 58,680
Ryan Chowdhury, Reg. No. 74,466
Fish & Richardson P.C.
60 South Sixth Street, Suite 3200
Minneapolis, MN 55402
T: 202-783-5070
F: 877-769-7945

Attorneys for Samsung

CERTIFICATE OF SERVICE

Pursuant to 37 CFR §§ 42.6(e)(4)(i) *et seq.* and 42.105(b), the undersigned certifies that on August 11, 2023, a complete and entire copy of this Petition for *Inter Partes* Review and all supporting exhibits were provided via Federal Express, to the Patent Owner, by serving the correspondence address of record as follows:

Headwater Research LLC
C/O Farjami & Farjami LLP
26522 La Alameda Ave., Suite 360
Mission Viejo, CA 92691

/Diana Bradley/

Diana Bradley
Fish & Richardson P.C.
60 South Sixth Street, Suite 3200
Minneapolis, MN 55402
(858) 678-5667