IN THE UNITED STATES PATENT AND TRADEMARK OFFICE

In re Patent of:	Gregory G. Raleigh, et al.	
U.S. Patent No.:	9,137,701	Attorney Docket No.: 39843-0155IP1
Issue Date:	September 15, 2015	
Appl. Serial No.:	14/675,113	
Filing Date:	March 31, 2015	
Title:	WIRELESS END-USER DEVICE WITH DIFFERENTIATED NETWORK ACCESS FOR BACKGROUND AND FORE-GROUND DEVICE APPLICATIONS	

Mail Stop Patent Board
Patent Trial and Appeal Board
U.S. Patent and Trademark Office
P.O. Box 1450
Alexandria, VA 22313-1450

PETITION FOR *INTER PARTES* REVIEW OF UNITED STATES PATENT NO. 9,137,701 PURSUANT TO 35 U.S.C. §§ 311–319, 37 C.F.R. § 42

TABLE OF CONTENTS

I. REQUIREMENTS FOR IPR 1
- **A.** Grounds for Standing 1
- **B.** Challenge and Relief Requested 1
- **C.** Claim Construction 2

II. THE '701 PATENT 2
- **A.** Brief Description 2
- **B.** Prosecution History 4

III. THE CHALLENGED CLAIMS ARE UNPATENTABLE 5
- **A.** GROUND 1A: Rao-Oestvall Renders Claims 1-4, 9-10, 13-14, 16, 19-20, and 25 Obvious 5
  - 1. Rao 5
  - 2. Oestvall 9
  - 3. Rao-Oestvall 12
  - 4. Analysis 16
- **B.** GROUND 1B: Rao-Oestvall-Montemurro Renders Claims 5-8, 11, 17-18, and 23-24 Obvious 47
  - 1. Montemurro 48
  - 2. Rao-Oestvall-Montemurro 50
  - 3. Analysis 52
- **C.** GROUND 1C: Rao-Oestvall-Araujo Renders Claims 12, 15, and 21-22 Obvious 66
  - 1. Araujo 66
  - 2. Rao-Oestvall-Araujo 68
  - 3. Analysis 72

IV. PTAB DISCRETION SHOULD NOT PRECLUDE INSTITUTION 77
- **A.** 35 U.S.C. §325(d) 77
- **B.** 35 U.S.C. §314(a) 78

V. CONCLUSION AND FEES 80

VI. MANDATORY NOTICES UNDER 37 C.F.R § 42.8(a)(1) 80
- **A.** Real Party-In-Interest Under 37 C.F.R. § 42.8(b)(1) 80
- **B.** Related Matters Under 37 C.F.R. § 42.8(b)(2) 80
- **C.** Lead And Back-Up Counsel Under 37 C.F.R. § 42.8(b)(3) 80
- **D.** Service Information 81

Headwater Ex. 2003
Samsung v. Headwater
IPR2023-01362

EXHIBITS

SAMSUNG-1001	U.S. Patent No. 9,137,701 to Raleigh, et al. ("the '701 Patent")
SAMSUNG-1002	Excerpts from the Prosecution History of the '701 Patent ("the Prosecution History")
SAMSUNG-1003	Declaration and Curriculum Vitae of Patrick McDaniel
SAMSUNG-1004	Complaint, *Headwater Research LLC v. Samsung Electronics Co., Ltd. et al.*, 2:22-cv-00422, E.D. Tex., October 26, 2022
SAMSUNG-1005	U.S. Pat. App. Pub. No. 2006/0039354 ("Rao")
SAMSUNG-1006	U.S. Pat. App. Pub. No. 2007/0038763 ("Oestvall")
SAMSUNG-1007	U.S. Pat. App. Pub. No. 2009/0207817 ("Montemurro")
SAMSUNG-1008	RESERVED
SAMSUNG-1009	U.S. Pat. App. Pub. No. 2008/0080458 ("Cole")
SAMSUNG-1010	U.S. Pat. No. 5,987,611 ("Freund")
SAMSUNG-1011	U.S. Pat. App. Pub. No. 2009/0217065 ("Araujo")
SAMSUNG-1012	RESERVED
SAMSUNG-1013	U.S. Pat. No. 8,381,127 ("Singh")
SAMSUNG-1014	U.S. Pat. App. Pub. No. 2007/0173283A1 ("Livet")
SAMSUNG-1015	U.S. Pat. No. 8,413,172 ("Sng")

SAMSUNG-1016	Flinn, Jason, et al. "The case for intentional networking," Proceedings of the 10th Workshop on Mobile Computing Systems and Applications, 2009 ("Flinn")
SAMSUNG-1017	Carter, Casey et al., "Contact networking: a localized mobility system," Proceedings of the 1st International Conference on Mobile systems, Applications and Services, 2003 ("Carter")
SAMSUNG-1018	RESERVED
SAMSUNG-1019	U.S. Pat. App. Pub. No. 2009/0019022 ("Schallert")
SAMSUNG-1020	David Flanagan, O'Reilly & Associates, Inc., "Java in a Nutshell," 1996, ISBN: I-56592-183-6
SAMSUNG-1021	W. Richard Stevens, et. al, "UNIX Network Programming Volume 1, Third Edition: The Sockets Networking API," 2004, ISBN: 0-13-141155-1
SAMSUNG-1022	U.S. Pat. App. Pub. No. 2009/0093247 ("Srinivasan")
SAMSUNG-1023	U.S. Pat. App. Pub. No. 2008/0311897 ("Segal")
SAMSUNG-1024	Buxton, B., "Integrating the Periphery and Context: A New Model of Telematics," in Proceedings of Graphics Interface '95, 1995
SAMSUNG-1025	Hinckley et. al, "Foreground and background interaction with sensor-enhanced mobile devices," ACM Trans. Comput. Hum. Interact., vol. 12, no. 1, pp. 31–52, Mar. 2005
SAMSUNG-1026	International Publication No. WO 03/100581 ("Dive-Reclus")
SAMSUNG-1027	U.S. Pat. No. 7,757,185 ("Paquette")

Headwater Ex. 2003
Samsung v. Headwater
IPR2023-01362

SAMSUNG-1028	Westerinen, et al., IETF RFC 3198, Terminology for Policy-Based Management, November 2001, available at https://www.ietf.org/rfc/rfc3198.txt
SAMSUNG-1029	Durham, et. al., IETF RFC 2748, "The COPS (Common Open Policy Service) Protocol," January 2000, downloaded from the internet at https://www.rfc-editor.org/rfc/rfc2748.html on August 1, 2023
SAMSUNG-1030	First Amended Docket Control Order, *Headwater Research LLC v. Samsung Electronics Co., Ltd. et al.*, 2:22-cv-00422, E.D. Tex., April 21, 2023
SAMSUNG-1031	Memorandum, Interim Procedure for Discretionary Denials in AIA Post-Grant Proceedings with Parallel District Court Litigation (USPTO June 21, 2022) ("Director's Guidance")
SAMSUNG-1032	Samsung Stipulation letter regarding IPR grounds in District court litigation
SAMSUNG-1033	First Amended Complaint, *Headwater Research LLC v. Samsung Electronics Co., Ltd. et al.*, 2:22-cv-00422, E.D. Tex., November 30, 2022
SAMSUNG-1034	W. Richard Stevens, UNIX Network Programming, Prentice Hall, 1990
SAMSUNG-1035	A. Freier, et al., The Secure Sockets Layer (SSL) Protocol Version 3.0, Internet Engineering Task Force (IETF), Request for Comments: 6101, ISSN: 2070-1721, August 2011, available at https://datatracker.ietf.org/doc/html/rfc6101

LISTING OF CHALLENGED CLAIMS

Claim 1	
[1pre]	A wireless end-user device, comprising:
[1a]	a wireless wide area network (WWAN) modem to communicate data for Internet service activities between the device and at least one WWAN, when configured for and connected to the WWAN;
[1b]	a wireless local area network (WLAN) modem to communicate data for Internet service activities between the device and at least one WLAN, when configured for and connected to the WLAN;
[1c]	one or more processors configured to
[1d]	determine, for a first end-user application capable of running in a background state and capable of running as a foreground application, whether the application is running in a background state or as a foreground application, and
[1e]	control, via an application program interface (API), application access for Internet service activities provided through the WWAN modem and the WLAN modem, to, based on a first differential traffic control policy, selectively block and allow access by the first end-

Headwater Ex. 2003
Samsung v. Headwater
IPR2023-01362

	user application to the WWAN modem at a time when data for Internet service activities is communicated through a WWAN modem connection to the at least one WWAN,
[1f], [1g]	wherein the access is selectively blocked based on a determination that the first end-user application is running in a background state, and wherein the access is selectively allowed based on a determination that the first end-user application is running as a foreground application.
Claim 2	
[2]	The wireless end-user device of claim 1, wherein the one or more processors are configured to determine that the first end-user application is running in a background state when a user of the device is not directly interacting with that application or perceiving any benefit from that application.
Claim 3	
[3]	The wireless end-user device of claim 1, further comprising a user interface to provide a user of the device with information regarding why the first differential traffic control policy is applied to the first end-user application.
Claim 4	

[4]	The wireless end-user device of claim 1, further comprising a user interface to inform a user of the device when there are options to set, control, override, or modify service usage controls that affect the first differential traffic control policy.
Claim 5	
[5]	The wireless end-user device of claim 1, wherein the first differential traffic control policy is part of a multimode profile having different policies for different networks.
Claim 6	
[6]	The wireless end-user device of claim 5, wherein the one or more processors are further configured to select a traffic control policy from the multimode profile based at least in part on the type of network connection currently in use by the device.
Claim 7	
[7]	The wireless end-user device of claim 6, wherein the one or more processors are further configured to, when the type of network connection is at least one type of WLAN connection, select a traffic control policy from the multimode profile based at least in part on a type of network connection from the WLAN to the Internet.

Claim 8	
[8a]	The wireless end-user device of claim 1, wherein the one or more processors are further configured to determine whether a second end-user application is running in a background state or as a foreground application, and
[8b]	control application access for Internet service activities by the second end-user application similar to the control of application access for the first end-user application, except the control of application access for Internet service activities by the second end-user application is based on a second differential traffic control policy that can be set different from the first differential traffic control policy.
Claim 9	
[9]	The wireless end-user device of claim 1, further comprising a network stack interface integrated with the API.
Claim 10	
[10]	The wireless end-user device of claim 1, further comprising a networking stack, wherein the one or more processors are further configured to, at an application service interface layer, identify application traffic flows prior to the flows entering the networking stack.

Claim 11	
[11]	The wireless end-user device of claim 1, wherein the one or more processors control of application access based on a first differential traffic control policy is applied to one of but not both of a connection to a roaming WWAN network and a connection to a home WWAN network.
Claim 12	
[12]	The wireless end-user device of claim 1, wherein the one or more processors are further configured to dynamically change the application of the first differential traffic control policy based on a power state of the device.
Claim 13	
[13]	The wireless end-user device of claim 1, wherein the one or more processors are further configured to dynamically change the application of the first differential traffic control policy based on a device usage state.
Claim 14	

[14]	The wireless end-user device of claim 1, wherein the one or more processors are further configured to dynamically change the application of the first differential traffic control policy based on monitoring of user interaction with the device.
Claim 15	
[15]	The wireless end-user device of claim 1, wherein the one or more processors are further configured to dynamically change the application of the first differential traffic control policy based on power control state changes for one or more of the modems.
Claim 16	
[16]	The wireless end-user device of claim 1, wherein the one or more processors are configured to associate the first end-user application with the differential traffic control policy based on an application behavior.
Claim 17	
[17]	The wireless end-user device of claim 1, wherein the differential traffic control policy defines that applications to which the policy applies can only have WWAN network access events during particular time windows.

Claim 18	
[18]	The wireless end-user device of claim 1, wherein the one or more processors are further configured to update the first differential traffic control policy based on information received from a network element.
Claim 19	
[19]	The wireless end-user device of claim 1, further comprising an agent to block, modify, remove, or replace user interface messages generated by the first end-user application based on the applied differential traffic control policy.
Claim 20	
[20]	The wireless end-user device of claim 1, wherein the one or more processors configured to control application access are configured to selectively block access by the first end-user application by intercepting open, connect, and/or write requests by the first end-user application to a network stack.
Claim 21	

[21]	The wireless end-user device of claim 20, wherein the API responds to an intercepted request by the first end-user application by emulating network messaging.
Claim 22	
[22]	The wireless end-user device of claim 21, wherein emulating network messaging comprises responding to a network request from the particular application by blocking the request from passing to a network stack and returning to the particular application a message indicating the network request was not successful.
Claim 23	
[23]	The wireless end-user device of claim 1, the first differential traffic control policy comprising first and second sub-policies applicable respectively to Internet data service provided using the WWAN modem to connect to a home WWAN and a roaming WWAN, wherein the one or more processors are further configured to apply the first sub-policy when Internet data service is provided through a home WWAN and to apply the second sub-policy when Internet data service is provided through a roaming WWAN.
Claim 24	

[24]	The wireless end-user device of claim 1, the first differential traffic control policy comprising first, second, and third sub-policies applicable respectively to Internet data service provided using the WWAN modem and three different network types from the network types consisting of 2G, 3G, 4G, home, and roaming.
Claim 25	
[25]	The wireless end-user device of claim 1, wherein the one or more processors are configured to determine when the first end-user application is running in a background state or as a foreground application based on a state of user interface priority for the application.

Headwater Ex. 2003
Samsung v. Headwater
IPR2023-01362

Samsung Electronics Co., Ltd. ("Petitioner" or "Samsung") petitions for *Inter Partes* Review ("IPR") of claims 1-25 ("the Challenged Claims") of U.S. Patent No. 9,137,701 ("the '701 Patent").

I. REQUIREMENTS FOR IPR

A. Grounds for Standing

Petitioner certifies that the '701 Patent is available for IPR. Petitioner is not barred or estopped from requesting this review. Petitioner was served with a complaint of infringement of the '701 Patent less than one year ago. SAMSUNG-1004.

B. Challenge and Relief Requested

Samsung requests an IPR of the Challenged Claims on the grounds noted below. Dr. McDaniel provides supporting testimony in his Declaration. SAMSUNG-1003, ¶¶17-18, 29-211.

Ground	Claims	§103
1A	**1-4, 9-10, 13-14, 16, 19-20, 25**	Rao, Oestvall
1B	**5-8, 11, 17-18, 23-24**	Rao, Oestvall, Montemurro
1C	**12, 15, 21-22**	Rao, Oestvall, Araujo

The '701 Patent claims priority to several provisional applications as early as 1/28/2009 ("Critical Date"). SAMSUNG-1002, Cover. Petitioner does not concede that the Critical Date is the priority date of the '701 Patent. The references

are prior art under §§102(a), 102(b), and/or 102(e).

Reference	Date	Basis
Rao	2/23/2006	§102(b)
Oestvall	2/15/2007	§102(b)
Montemurro	2/15/2008	§102(e)
Araujo	2/26/2008	§102(e)

C. Claim Construction

No formal claim constructions are necessary because "claim terms need only be construed to the extent necessary to resolve the controversy." *Wellman, Inc. v. Eastman Chem. Co.*, 642 F.3d 1355, 1361 (Fed. Cir. 2011). Petitioner reserves the right to respond to any constructions offered by Patent Owner or adopted by the Board. Petitioner is not conceding that each challenged claim satisfies all statutory requirements, nor is Petitioner waiving any arguments concerning claim scope or grounds that can only be raised in district court. For this petition, Petitioner applies prior art in a manner consistent with Patent Owner's allegations of infringement before the district court.

II. THE '701 PATENT

A. Brief Description

The ’701 Patent provides “a wireless end-user device that has wireless wide-area network (WWAN) and wireless local-area network (WLAN) modems.” SAMSUNG-1001, Abstract; SAMSUNG-1003, ¶¶41-43.

The system “analyzes traffic from [a] network service consuming application” and “categorize[s] the traffic” based on various criteria including “network type, time of day, connection cost, whether home or roaming, network busy state, QoS, and whether the particular service usage activity is in foreground of user interaction or in the background of user interaction.” *Id.*, 100:56-101:39. The system uses policies to “determine an appropriate prioritization for traffic to and/or from the network service consuming application.” *Id.*, 101:47-57. According to policies, the system can selectively (i) “cause[] the network service consuming application ... traffic to be queued in [an] application traffic cache” for transmission over a network or (ii) “restrict network access of a particular service usage activity.” *Id.*, 101:63-102:37.

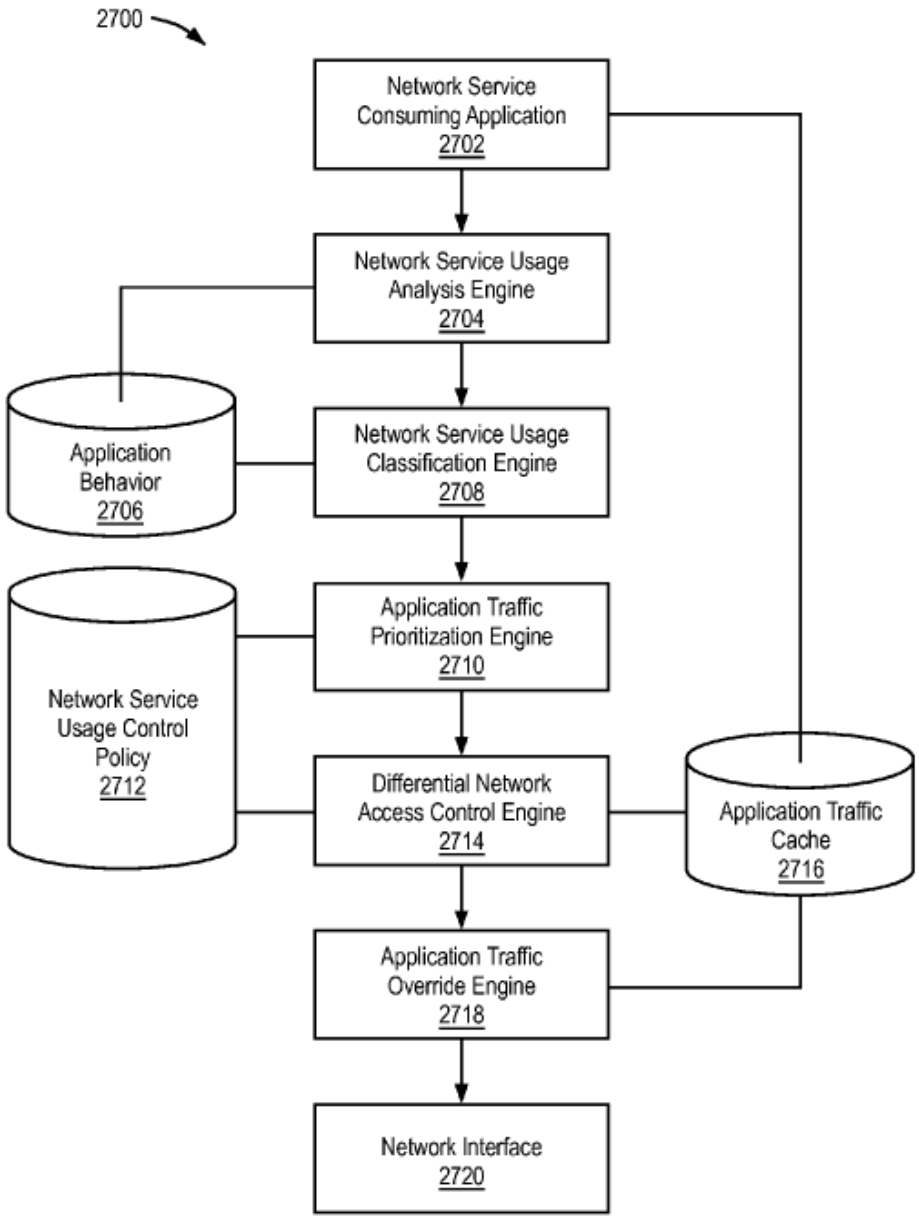

SAMSUNG-1001, Figure 27

B. Prosecution History

The '701 Patent received a first action allowance. SAMSUNG-1002, 317-324. The Examiner did not consider Rao, Oestvall, Montemurro, or Araujo. *See, generally*, SAMSUNG-1002; SAMSUNG-1003, ¶44.

III. THE CHALLENGED CLAIMS ARE UNPATENTABLE

A. GROUND 1A: Rao-Oestvall Renders Claims 1-4, 9-10, 13-14, 16, 19-20, and 25 Obvious

1. Rao [1]

Rao describes a "remote access architecture" for a system that provides "peer-to-peer communications and remote access connectivity." SAMSUNG-1005, Abstract. In Rao, clients 105 (instances of computing devices 102) communicate with each other over a network 104 and with other computing devices, such as servers 102e and server farms 102n. *Id.*, [0086]-[0096], Figure 1A; SAMSUNG-1003, ¶¶46-48.

[1] Descriptions of the references and combinations thereof are incorporated into each mapping that includes citations to these references. All emphasis is added unless otherwise indicated.

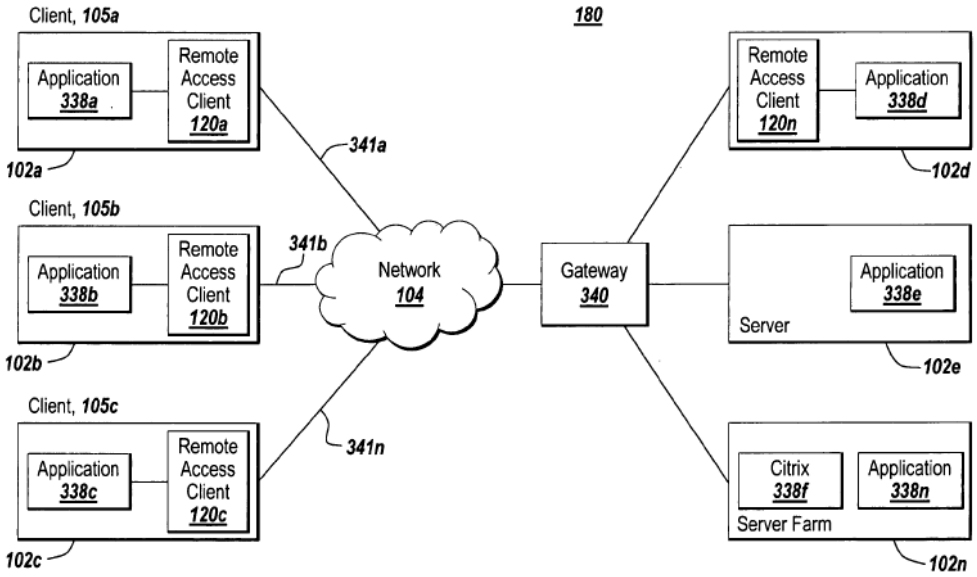

SAMSUNG-1005, Figure 1A

Rao addresses inefficient use of network resources when communications between devices are "processed in the order generated by the activity of a user and applications of the client," which is not "always desirable" since "a network packet generated or received for an application running in the background may be processed ahead of a network packet generated or received for the application running in the foreground." SAMSUNG-1005, [0001]. This results in increased latency and reduced quality of voice communication. *Id.*; SAMSUNG-1003, ¶49.

Rao contemplates addressing these network inefficiencies through a prioritization scheme that "provide[s] application-aware, client-specific prioritization of packet traffic." SAMSUNG-1005, [0003]. The prioritization scheme is achieved

by augmenting client 105 with remote access client 120 that interacts with applications 338 and network stack 310. SAMSUNG-1005, [0100]; SAMSUNG-1003, ¶50.

Figure 1C shows an example system with a remote access client for routing network packets from client 105 to network 104. SAMSUNG-1003, ¶51.

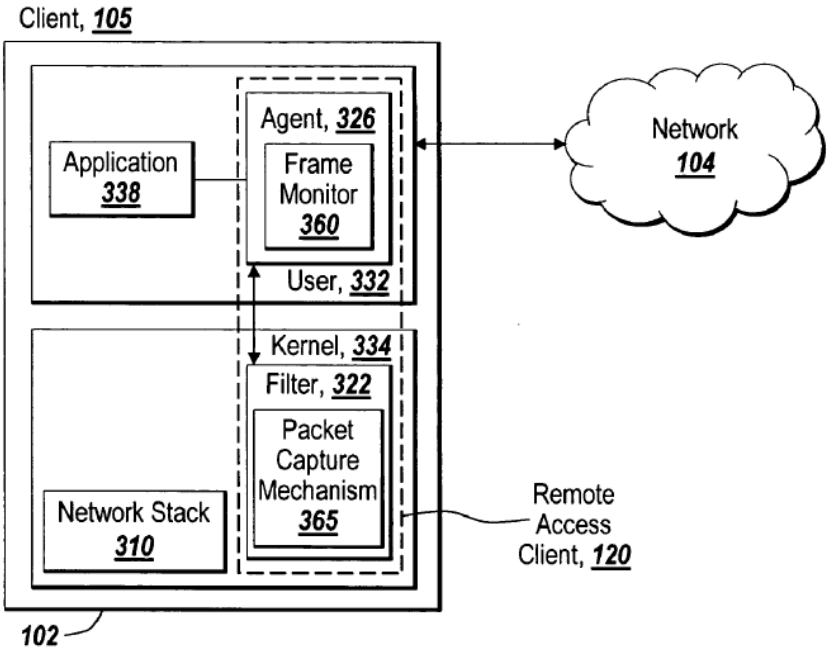

SAMSUNG-1005, Figure 1C

Remote access client 120 includes filter 322 with a filtering table "to determine what action to take against packets," including "ensur[ing] that unwanted packets are discarded" and "deny[ing] access to particular protocols or to prevent unauthorized access from remote computers by discarding packets to specified destination addresses." SAMSUNG-1005, [0102]. Agent 326 with frame monitor 360 "include[s] policies and logic for applying a policy to a received packet." *Id.*,

[0108]. Frame monitor 360 also "transmit[s] a packet to a gateway 340 responsive to a policy-based determination made by the frame monitor 360." *Id.* Use of policies through remote access client 120 guides efficient use of network resources. SAMSUNG-1003, ¶52.

Rao's client-side application-aware network communication system enables "intelligent and client centric prioritization of application network communications on a client based on the type and/or priority of an application." SAMSUNG-1005, [0179], Figure 5A. To perform prioritization, Rao "appl[ies] a policy to determine a condition of the client 105, or endpoint, at the time of transmission of the packet." *Id.*, [0109]; SAMSUNG-1003, ¶53.

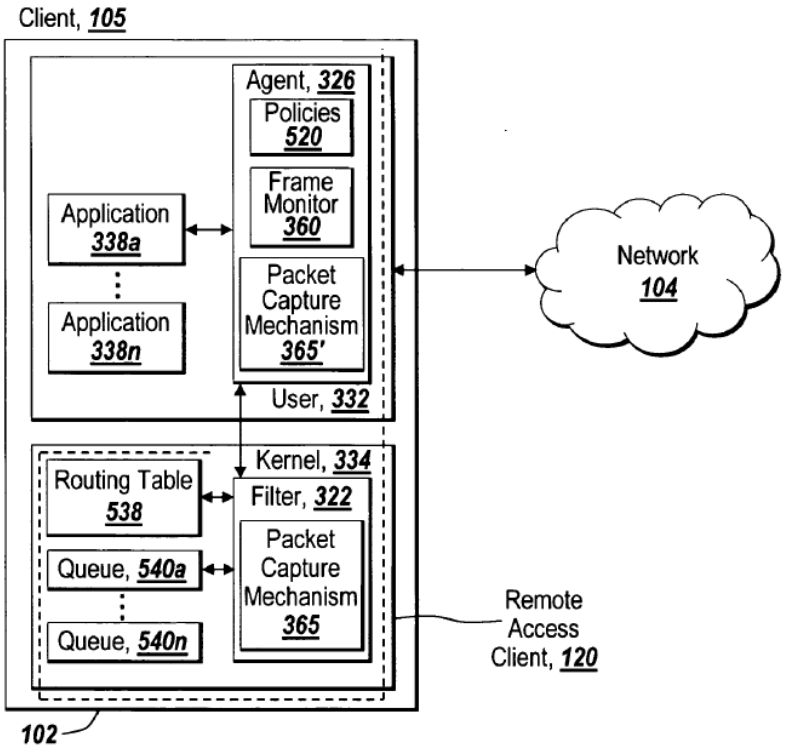

SAMSUNG-1005, Figure 5A

Rao offers non-limiting disclosure relating to the specification of policies 520 and how its system leverages each of these policies 520 for prioritization. SAMSUNG-1005, [0182]; SAMSUNG-1003, ¶54. For example, Rao's policies 520 can be specified by "name of the application," "type of application," or "type of one or more protocols used by the applications." SAMSUNG-1005, [0182]. Policies can "define prioritization based on whether an application is running in the foreground or the background of the client," "indicate prioritization based on the destination network address, such as host name or IP address, and/or destination port number," and be "specified conditionally, such as if one application 338a is running, a second application 338b may have a higher or lower priority." *Id.* Rao recognizes the "multitude of ways to define client-side application priorities." *Id.* Policies 520 can be used to "determine which packets to queue and/or discard." *Id.*, [0207]. Thus, policies can "apply a priority to network packets of applications 338a-338n in accordance with the prioritization rules specified or indicated by the policies." *Id.*; SAMSUNG-1003, ¶54.

2. Oestvall

Oestvall describes techniques to "preserve or conserve resources, such as battery power" on mobile devices. SAMSUNG-1006, [0002]. Oestvall emphasizes that battery consumption is "very important," particularly in devices that

"consume high power levels by virtue of connecting to always-on GPRS or 3G cellular networks," which is "especially acute for multi-tasking devices." *Id.*, [0004], [0007]. This occurs since conventional schedulers used for multitasking may be configured such that "applications will continue to run even when not actually in active use," resulting in applications continuing to "use some system resources, even when residing in the 'background.'" *Id.*, [0006]; SAMSUNG-1003, ¶¶55-56.

Oestvall addresses power consumption challenges by "denying system resources and services to background applications that do not meet predefined 'trust' or certification criteria" (i.e., "untrusted" applications). SAMSUNG-1006, [0010], Figure 1. Example untrusted applications include those unable "to access certain predefined protected resources" and those not validated using a "predefined validation or certification process." *Id.*, [0011]-[0013]; SAMSUNG-1003, ¶57.

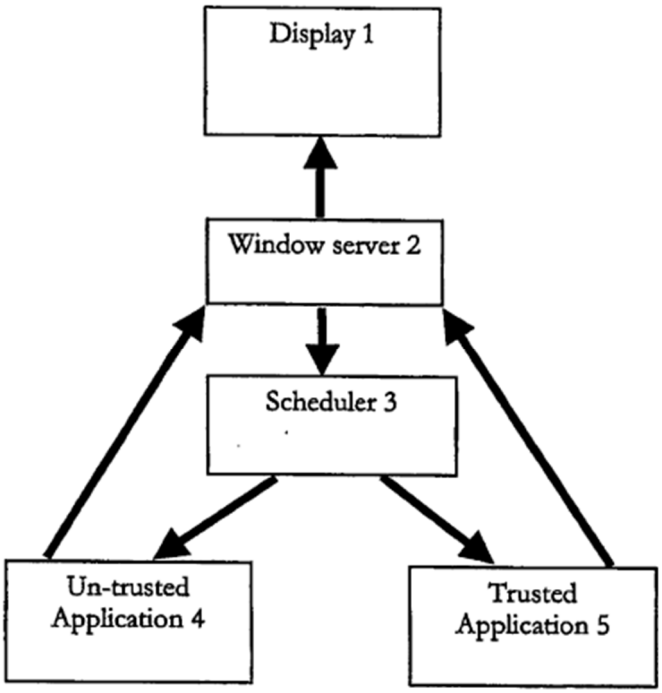

SAMSUNG-1006, Figure 1

A window server component determines "if an application is in the background or foreground on display." SAMSUNG-1006, [0023]. If the application is untrusted and is running in the background, then the window server component "send[s] a control signal to the scheduler" that prevents it from "running, e.g., being given any services or consuming any resources." *Id.* Oestvall offers several non-limiting examples for how the scheduler regulates access to resources by a background untrusted application. *Id*. As examples, the scheduler may "place any interrupts from [the application] to the back of its queue and never allow them to be executed." *Id.*, [0023]-[0024]. When an application is in the foreground, the

application is permitted to "run again—e.g., to be provided with resources and services." *Id.*, [0025]; SAMSUNG-1003, ¶58.

3. Rao-Oestvall

As described above, Rao describes applying policies to prioritize transmission of higher-priority network packets over lower-priority network packets. SAMSUNG-1005, [0179]-[0195], Figure 5A. While Rao teaches that such prioritization techniques would have improved the efficient utilization of network resources, a person of ordinary skill in the art (POSITA)[2] would have further understood that the prioritization techniques may have implications not specifically addressed in Rao. SAMSUNG-1003, ¶72. By the Critical Date, a POSITA would have recognized that Rao's prioritization techniques reduce congestion and improve packet throughput. *Id.*; SAMSUNG-1005, [0195]. While Rao does not expressly account for application states in its prioritization techniques, a POSITA would have understood and found obvious that application states similarly impact the problems addressed in Rao, such as network usage efficiency. SAMSUNG-1003, ¶72. A POSITA looking to implement Rao would have therefore been motivated to look to solutions to improve Rao's packet-based prioritization techniques. *Id.*

In seeking solutions, a POSITA would have identified Oestvall, which, like

[2] SAMSUNG-1003, ¶¶17-18 (defining a POSITA).

Headwater Ex. 2003
Samsung v. Headwater
IPR2023-01362

Rao, is broadly focused on achieving efficiencies associated with mobile device operation. SAMSUNG-1003, ¶73; SAMSUNG-1006, [0002]. Oestvall offers techniques to "preserve[] system resources by denying system resources and services" to certain applications. SAMSUNG-1006, [0010]. A POSITA would have found obvious integration of Oestvall's resource conservation techniques into Rao to promote more efficient peer-to-peer communications and network access connectivity that also reduces power consumption on a mobile device. SAMSUNG-1003, ¶73. As explained below, the Rao-Oestvall device (or "Rao-Oestvall") would have performed various types of prioritizations regulating access to device resources by applications, such as those based on network packet transmission ("application-aware, client-specific prioritization of packet traffic" as Rao describes) and others based on the classification of an application (described in Oestvall). *Id*. Given Oestvall's focus on battery conservation, Rao-Oestvall would have therefore enabled prioritization that conserves battery power. *Id*.

In Rao-Oestvall, a POSITA would have improved the agent 326 (red) to incorporate functionality associated with Oestvall's window server 2 (purple) and functionality associated with scheduler 3 (blue). SAMSUNG-1003, ¶74; SAMSUNG-1006, [0023]. Such a configuration would have enabled an improved agent to classify applications 338a-n (for which packet transmissions are prioritized) as

"trusted" or "untrusted" applications. *Id*. The configuration would have also enabled the improved agent to prevent an untrusted application in the background from running or being given access to a service that consumes resources. *Id.*

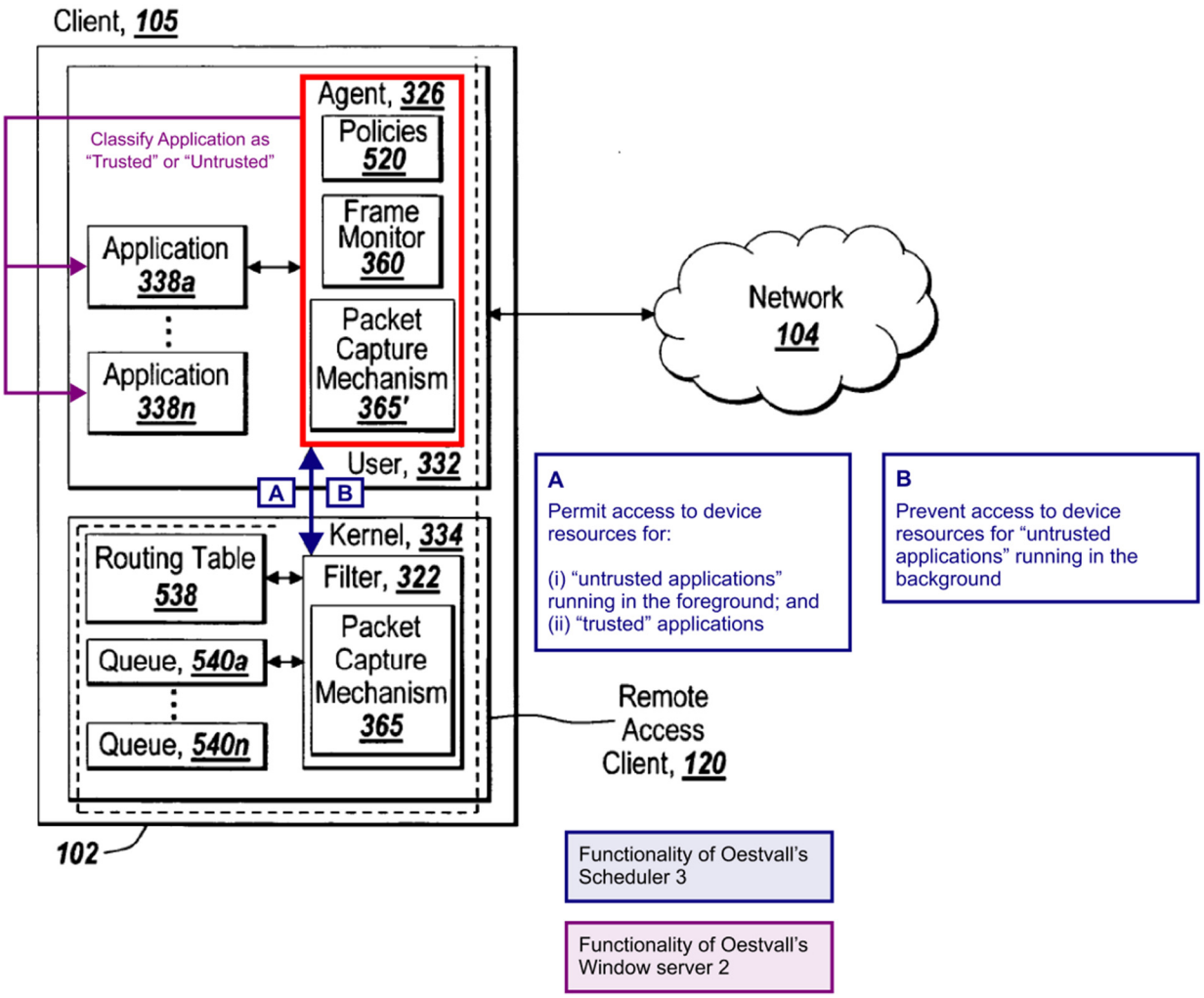

SAMSUNG-1005, Figure 5A[3]

A POSITA would have found obvious that Rao-Oestvall enables policies that provide various types of prioritizations, consistent with Rao. SAMSUNG-

[3] Annotations to figures throughout are shown in color.

1005, [0182]; SAMSUNG-1003, ¶75. This would have improved the use of policies in certain network scenarios contemplated in Rao since policies can be used to prevent network packet transmissions of applications that would have otherwise contributed to additional power consumption. SAMSUNG-1003, ¶75.

To implement this functionality, a POSITA would have modified Rao's policies 520 to include logic relating to a classification of an application. SAMSUNG-1003, ¶76. This modification is consistent with Rao, whose policies already "may be specified by" the name and/or type of application. SAMSUNG-1005, [0182]. Further, the policies "define prioritization based on whether an application is running in the foreground or the background." *Id.* Thus, a POSITA would have found it natural to implement the Rao-Oestvall device such that the policies used by the device indicate information for both packet-based and application-based prioritizations. SAMSUNG-1003, ¶76.

Finally, configuring Rao's client to leverage Oestvall's teachings would have required only routine programming knowledge well within the POSITA's skill. SAMSUNG-1003, ¶77. The change would have amounted to nothing more than use of known techniques to improve similar devices—in each instance a smart phone equipped with software to regulate device activity based on monitoring user-device interactions—in a similar way, and combining prior art elements according to known methods to yield the predictable results described above. *KSR v.*

Teleflex, 550 U.S. 398, 417 (2007).

The elements of the resulting Rao-Oestvall system would each perform functions they had been known to perform prior to the combination—client 105 would perform the same functions to prioritize higher-priority messages over lower-priority messages through the use of policies 520, as taught in Rao, but would leverage functionality offered by Oestvall's window server 2 and scheduler 3 to identify the application's classification (trusted/untrusted) and interaction state (foreground/background). SAMSUNG-1003, ¶78. Accordingly, a POSITA would have naturally expected success when incorporating Oestvall's teachings into the Rao system. *Id.*

4. Analysis

[1pre]

To the extent the preamble is limiting, Rao-Oestvall renders obvious a ***wireless end-user device***. SAMSUNG-1003, ¶79. Rao's "multiple computing devices 102a-102c" ("clients 105a-105c") connect to a network using one or more network connections. SAMSUNG-1005, [0086]. Client 105 can be "any type and/or form of computing device 102 that can run one or more applications 338." *Id.*, [0088]. Client 105 can also be a "mobile client," such as a "notebook, personal digital assistant (PDA), a smart phone." *Id.*, [0198]; SAMSUNG-1003, ¶79.

[1a]

Rao-Oestvall would have included network connectivity features that Rao

describes for device 102 (client 105), thereby rendering this limitation obvious. SAMSUNG-1003, ¶80. Rao's device includes "network interface 118 to interface to ... Wide Area Network (WAN) through a variety of connections," such as "LAN or WAN links," "wireless connections," or "some combination." SAMSUNG-1005, [0095], [0125]. Rao's "network interface" includes "a built-in network adapter, network interface card, ... ***modem***, or any other device suitable for interfacing the computing device 102 to any type of network capable of communication." *Id.* A POSITA would have understood and found it obvious to implement network interface 118 to enable multiple types of network connectivity such that network interface includes a "***WWAN modem***" to permit Rao-Oestvall's device to communicate with network 104 as a WWAN for accessing services associated with a remote access client ("***communicate data for Internet service activities***"). SAMSUNG-1003, ¶80; SAMSUNG-1005, [0172], [0198], [0090]. Further, network configurations for mobile devices that enabled WLAN and WWAN connectivity and techniques for alternating connectivity between such configurations were conventional by the Critical Date. SAMSUNG-1003, ¶81 (citing SAMSUNG-1007; SAMSUNG-1009).

[1b]

As discussed in [1a], Rao's non-limiting disclosure of network connectivity features provided by network interface 118 would have been included in Rao-

Oestvall. SAMSUNG-1005, [0095], [0125]. Rao's network interface 118 enables connectivity "through a variety of connections," such as "LAN or WAN links," "wireless connections," or "some combination." SAMSUNG-1005, [0125]. A POSITA would have understood and found it obvious to implement network interface to enable multiple types of network connectivity such that network interface includes, among others, a "***WLAN modem***" to permit Rao-Oestvall's device to communicate with network 104 as a wireless LAN for accessing services associated with a remote access client ("***communicate data for Internet service activities***"). SAMSUNG-1003, ¶82; SAMSUNG-1005, [0172], [0198], [0090]. Further, network configurations for mobile devices that enabled WLAN and WWAN connectivity and techniques for alternating connectivity between such configurations were conventional by the Critical Date. SAMSUNG-1003, ¶82; SAMSUNG-1007, [0030]; SAMSUNG-1009, [0035], Figure 2.

[1c]

Rao's device includes "central processing unit," which can be "any logic circuitry that responds to and processes instructions fetched from the main memory unit 104." SAMSUNG-1005, [0118]-[0119], [0121] ("main processor"), Figure 1D ("CPU"). It would have been obvious for Rao-Oestvall's processor(s) to perform the operations recited in the Challenged Claims. SAMSUNG-1003, ¶83.

[1d]

Rao-Oestvall renders obvious "***determining ... whether the application is running in a background state or as a foreground application***." SAMSUNG-1003, ¶84. Rao's device ("client 105") includes "remote access client 120" that "determine[s] whether the application 338a-338n associated with the network packet is running in the foreground or the background of the client 105." SAMSUNG-1005, [0188], [0182], [0189].

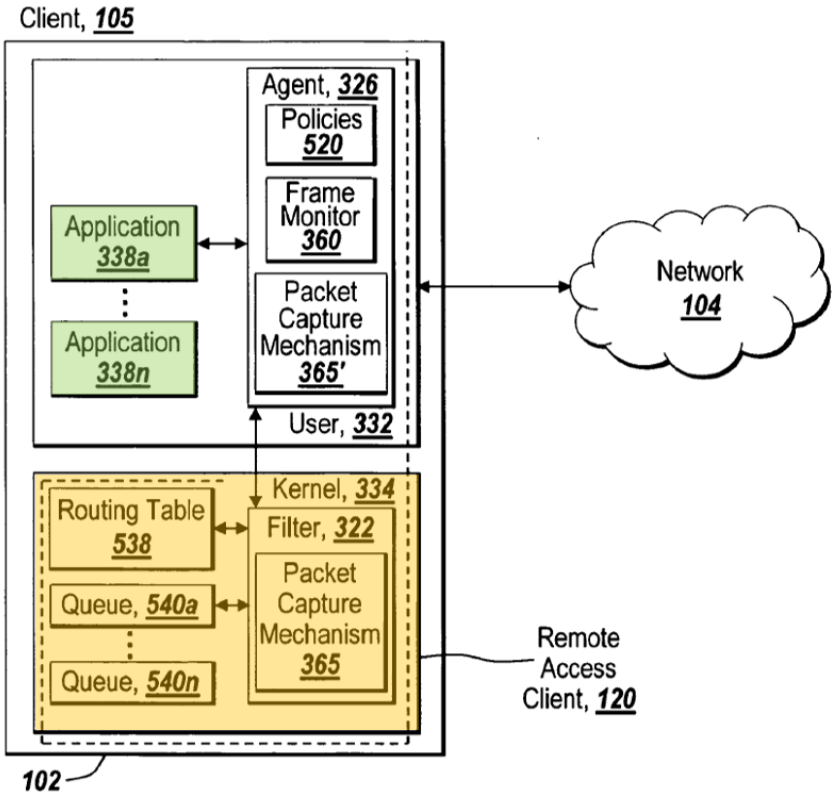

SAMSUNG-1005, Figure 5A

Further, Rao-Oestvall renders obvious "***a first end-user application capable of running in a background state and capable of running as a foreground appli-***

cation." SAMSUNG-1003, ¶85. Rao's device "execute[s] one or more applications 338a-338n, which access the network 104 via the agent 326 and filter 322 of the remote access client 120." SAMSUNG-1005, [0179]. Rao's applications provide services for end-users, such as "real-time data communications, such as VoIP," "email, collaboration, online meeting, and/or desktop sharing related services or functionality," thereby describing a ***first end-user application***. *Id.*; *see also* [0088]; SAMSUNG-1003, ¶85. Further, Rao's applications can "run[] in the foreground or the background." SAMSUNG-1005, [0188]-[0189], [0182].

Indeed, a POSITA would have understood and found obvious that an application selectively runs in background or foreground states. SAMSUNG-1003, ¶86. For example, a VoIP application, discussed in Rao, can run in a foreground state when a user actively interacts with the application during a call (e.g., speaking via a microphone, listening via a speaker, dialing via a keypad, etc.), and run in a background state when the call is put on hold or when the VoIP is not in use (e.g., stand-by mode). *Id.* A POSITA would have understood that Rao's device would not always run the VoIP application in the foreground state even when a caller was put on hold or the application was not in active use, which would directly contradict Rao's purposes—"improv[ing] or increas[ing] the performance, operational characteristics, and user experience on the client based on the applications running on the client." *Id.*; SAMSUNG-1005, [0080]. Notably, Rao does not describe the

notions of foreground and background running as mutually exclusive. SAMSUNG-1003, ¶86. Rao's techniques are applicable to both a situation where an application selectively runs in foreground and background states and a situation where two applications are categorically distinctive from each other as foreground and background applications. *Id.*; SAMSUNG-1005, [0185].

Moreover, it would have been obvious that an application can run either state as needed, as evidenced in Oestvall. SAMSUNG-1003, ¶87. Oestvall describes that its device is "capable of determining if an untrusted application is in the background or foreground." SAMSUNG-1006, [0016], [0017], [0021] ("untrusted application" switches between the background and the foreground to preserve system resources and battery power). Therefore, in the combination, Rao's device would have been modified such that an application (e.g., "untrusted application") executed at the device selectively runs in foreground and background states, as taught by Oestvall. SAMSUNG-1003, ¶87; *see supra* §III.A.3.

[1e]

Rao-Oestvall renders obvious [1e]. SAMSUNG-1003, ¶¶88-110.

"control ... application access for Internet service activities provided through the WWAN modem and the WLAN modem"

Rao's device "execute[s] one or more applications 338a-338n, which access the network 104 via the agent 326 and filter 322 of the remote access client 120."

SAMSUNG-1005, [0179]. Access to the network is to communicate data for ***Internet service activities***, such as "one or more real-time data communications, such as VoIP" and "email, collaboration, online meeting, and/or desktop sharing related services or functionality." *Id.*, [0178], [0090], [0082] ("internet protocol (IP) based protocol"). As described in [1a]-[1b], ***Internet service activities*** are ***provided through the WWAN modem and the WLAN modem***. SAMSUNG-1003, ¶89.

Rao's device generally controls access by those applications (***application access***) to the network by, for example, "intercepting network traffic of any of the applications 338a-338n" and "queuing and prioritizing network communications" for the applications. SAMSUNG-1005, [0179]-[0195]; SAMSUNG-1003, ¶90. Particularly, Rao's device controls each application's access to the network by (i) "intercept[ing] one or more networks packets associated with an application 338a-338n," which then are "stored to a queue 540a-540n," (ii) determining "a priority for the intercepted and queued network packet ... based on the type and/or priority of the application 338a-338n," and (iii) communicating "the network packets ... according to the determined priority." SAMSUNG-1005, [0184]-[0190], Figure 5B; SAMSUNG-1003, ¶90.

"via an application program interface (API)"

Rao-Oestvall implements various APIs. SAMSUNG-1003, ¶¶91-92; SAMSUNG-1005, [0106], [0110], [0166], [0190], [0205]. As shown in Figure 5A (below), Rao's policies 520 are accessible by, configured into, or loaded by agent 326. SAMSUNG-1005, [0183]. Agent 326 "indicates the priority to the filter 322 for management of network packet queues 540a-540n to apply the indicated priorities." SAMSUNG-1005, [0190]. "The agent 326 may communicate the priority of network packets to the filter 322 by any suitable means and/or mechanism such as ***via an application programming interface (API)***, such an IOCTL interface, or any other type and/or form of interface known to those ordinarily skilled in the art." *Id.*; *see also* [0106]. Thus, Rao's device controls application access to the network ***via API***. SAMSUNG-1003, ¶91 (citing SAMSUNG-1034).

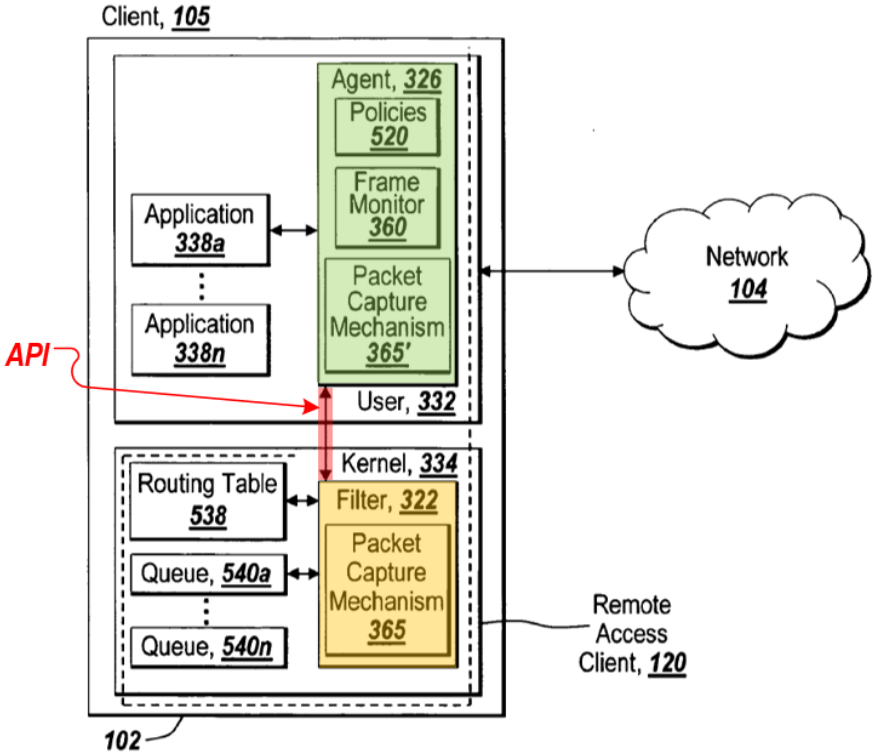

SAMSUNG-1005, Figure 5A

Similarly, Oestvall incorporates by reference Dive-Reclus,[4] which teaches using APIs in accessing a network. SAMSUNG-1006, [0020]; SAMSUNG-1026, 16:23-17:28, 20:1-12; SAMSUNG-1003, ¶93.

Thus, based on Rao and Oestvall's disclosure of API usage, Rao-Oestvall's improved agent would have leveraged several types of APIs in regulating applications. SAMSUNG-1003, ¶94; SAMSUNG-1005, [0110], [0166]. For example, Rao contemplates using an IOCTL API for interfacing with device drivers (SAMSUNG-1005, [0106], [0190]) and a hooking API for intercepting and/or hooking network traffic of applications (*id.*, [0166]). Rao also describes leveraging any suitable "means" or "mechanism" to implement functionality relating to prioritization (interception). SAMSUNG-1005, [0106]. Likewise, Dive-Reclus[5] teaches permissions regulating network access by a third-party application that uses an API call; a POSITA would have found obvious that a permission decision (grant/deny)

---

[4] Oestvall incorporates by reference Dive-Reclus (as PCT/GB2003/002311), which published as International Publication No. WO 03/100581 (SAMSUNG-1026). SAMSUNG-1006, [0020]. Dive-Reclus is "effectively part of [Oestvall] as if [it] were explicitly contained therein." *Arbutus Biopharma Corp. v. ModernaTX*, 65 F.4th 656, 662-63 (Fed. Cir. 2023)(internal quotations and citation omitted).

[5] *Id.*

Headwater Ex. 2003
Samsung v. Headwater
IPR2023-01362

is communicated to the third-party application through a corresponding API. SAMSUNG-1006, [0020]; SAMSUNG-1026, 16:23-17:28, 20:1-12; SAMSUNG-1003, ¶94. Thus, a POSITA would have understood and found obvious that Rao-Oestvall's improved agent leverages APIs including those Rao and Oestvall describes, and conventional APIs known by the Critical Date, to support application operations in mobile devices. SAMSUNG-1003, ¶94.

One example is Java sockets API through which an application communicates data over a network. SAMSUNG-1020, 149-50. Rao describes that its device can run the Java operating system, and thus, a POSITA would have understood and found obvious that in implementations of the Rao-Oestvall device, applications running on the device would access the network using Java sockets API. *Id.*; SAMSUNG-1005, [0088], [0128]. For example, when a network access condition is used to prevent an application from accessing the network, a POSITA would have understood and found obvious that the application would have received an indication, via the Java sockets API, of the network access condition. SAMSUNG-1003, ¶95 (citing SAMSUNG-1034).

A POSITA would have found it obvious to use well-known APIs to provide communications to applications in Rao-Oestvall. SAMSUNG-1003, ¶96 (citing SAMSUNG-1016; SAMSUNG-1019).

"based on a first differential traffic control policy"

Rao's remote access client 120 in the device 102 has "one or more policies 520 for specifying client-side prioritization of network communications related to applications." SAMSUNG-1005, [0182]-[0183], [0187], [0189], [0193]-[0194], [0207], [0108]-[0109]; SAMSUNG-1003, ¶97. Because Rao's policies are designed to prioritize, queue, and discard network packets, they offer different controls for different network traffic (network packets). SAMSUNG-1003, ¶97.

"to ... selectively block and allow access by the first end-user application to the WWAN modem"

First, Rao's device can ***allow*** network packets to be transmitted to the network through the modem using filter that can "place, arrange, or coordinate network packets into queues 540a-540n in support of the priorities," which are defined by the policies. SAMSUNG-1005, [0191], [0182], [0179]-[0180], [0189]. According to the priorities, device 102 communicates network packets to the network (e.g., WWAN) through the network interface (e.g., "***WWAN modem***"). *Id.*, [0184], [0191]-[0194]; *see supra* [1a]; Figures 1D and 5A (below); SAMSUNG-1003, ¶98.

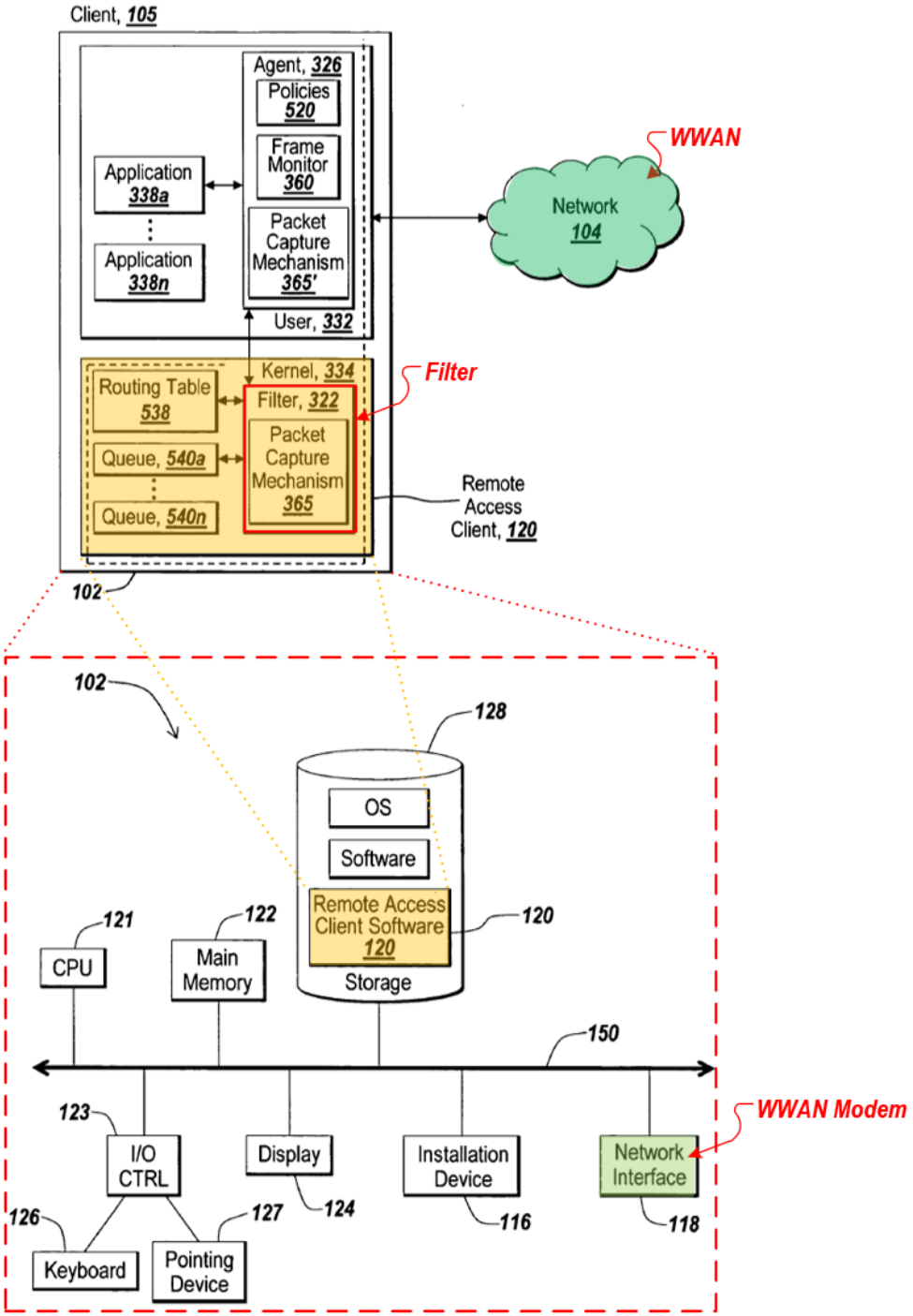

SAMSUNG-1005, Figures 1D and 5A

Second, Rao's device can ***block*** network packets from being transmitted to the network through the modem by using the same filter, which can "discard[]" the

network packets. SAMSUNG-1005, [0207]. [0102]; SAMSUNG-1003, ¶99.

The filter can "place, arrange, or coordinate network packets into queues 540a-540n in support of the priorities," which are defined by the policies 520. SAMSUNG-1005, [0191], [0182], [0179]-[0180], [0189]. Then, client 120 can "use the policies 520 to determine which network packets to queue and/or discard," so that certain network packets are blocked from being transmitted to the network. SAMSUNG-1005, [0207], [0102]; SAMSUNG-1003, ¶100.

Although Rao's description regarding the use of "policies 520" in this context is set forth in the context of "a network disruption shielding technique" (*see, e.g.,* SAMSUNG-1005, [0199]), a POSITA would have found it obvious to also use policies 520 to discard low priority packets where the network is not disrupted but there exists a similar desire to, nevertheless, reduce communications over the network (e.g., due to reductions in bandwidth of the network, or a surge in higher priority packets to be sent over the network). SAMSUNG-1003, ¶101. Doing so would have achieved the benefit of ensuring that communication resources are selectively freed up for higher priority packets/communications. *Id.* A POSITA would have understood and found obvious configuring Rao's device to prioritize the captured packets by selectively "drop[ping] or accept[ing] the network packets depending on their content" (e.g., effectively deprioritizing those captured packets entirely). SAMSUNG-1005, [0102]; SAMSUNG-1003, ¶101. For example, Rao's

filter 322 can be used to "discard[] packets" having the lowest priority (e.g., "unwanted packets") such that the packets are not transmitted to the network. SAMSUNG-1005, [0102]; SAMSUNG-1003, ¶101.

Notably, Rao's packet capturing mechanism 356 in filter 322 can be implemented at "any layer, or portion thereof, of a network stack 310 of the client 105," so that the interception of network packets can occur at any layer or portion of the network stack in the client 105. SAMSUNG-1005, [0101]; SAMSUNG-1003, ¶102. A POSITA would have understood and found obvious that, in Rao, the network packets generated by an application can be dropped or discarded before reaching Rao's network interface 118 ("***WWAN modem***"), which means that the application's access to the network interface 118 ("***access by the first end-user application to the WWAN modem***") is ***blocked***. SAMSUNG-1003, ¶102; SAMSUNG-1005, [0207], Figures 1D and 5A (above).

Similar to Rao, Oestvall describes that its scheduler regulates access to resources by an untrusted application depending on whether the application runs in the background or foreground. SAMSUNG-1006, [0023]. For example, when an untrusted application runs in the background, Oestvall's device prevents the application from "being given any services or consuming any resources," so a POSITA would have understood and found obvious that such prevention would block the application's access to network resources (e.g., WWAN modem). *Id.*, [0023]-

[0024]; SAMSUNG-1003, ¶103. When the untrusted application runs in the foreground, the application is permitted to "run again—e.g., to be provided with resources and services," so a POSITA would have understood and found obvious that such permission would allow the application to access network resources (e.g., WWAN modem). SAMSUNG-1006, [0025]; SAMSUNG-1003, ¶103.

"at a time when data for Internet service activities is communicated through a WWAN modem connection to the at least one WWAN"

As discussed in [1a]-[1b], Rao describes WLAN and WWAN as example network types to which network packets generated by an application can be transmitted via the network interface, such as a wireless network adapter or modem. SAMSUNG-1005, [0125]; SAMSUNG-1003, ¶104. Therefore, a POSITA would have understood and found obvious that there would be ***a time when Rao's device operates to communicate data for Internet service activities to the WWAN through the WWAN modem***. SAMSUNG-1003, ¶104.

Additionally, Rao describes that the network packets generated by an application are prioritized or dropped based on the policies, which define various criteria, such as the type of ***protocol*** used by the application, "***other network factors, such as congestion***," and "***any network statistics and other factors occurring on the network***." SAMSUNG-1005, [0182]-[0184], [0188]-[0189], [0192]-[0193], [0195], [0102]. Particularly, Rao's "policies 520 may be specified hierarchically to account for multiple applications 338a-338n and/or ***multiple protocols*** that may

be executed on the client 105 at any point." *Id.*, [0182]. A POSITA would have understood and found obvious that WLAN and WWAN are associated with different "protocols" and that Rao's policies can be tailored for an application capable of communicating to a specific "protocol" (e.g., WWAN). SAMSUNG-1003, ¶105. Accordingly, Rao teaches that ***access by the first end-user application to the WWAN modem*** is selectively blocked and allowed ***at a time when data for Internet service activities is communicated through a WWAN modem connection to the at least one WWAN***. *Id.*

A POSITA would have found it obvious to configure policy use by Rao-Oestvall to increase device efficiency where device operation increases battery consumption, such as when the device is engaged in network activity over a WWAN network. SAMSUNG-1003, ¶106. Indeed, Oestvall observes, "battery conservation in battery operated computing devices is very important, particularly in devices such as smartphones that consume high power levels by virtue of connecting to always-on GPRS or 3G cellular networks." SAMSUNG-1006, [0004]. A POSITA would have found it advantageous to implement Rao-Oestvall to apply policies to regulate application activity ("***control ... application access for Internet service activities ... to, based on a first differential traffic control policy, selectively block and allow access by the first end-user application***") to reduce battery

consumption when the device is connected to "always-on GPRS or 3G cellular networks" ("***at a time period when data for Internet service activities is communicated through a WWAN modem connection to the at least one WWAN***"). SAMSUNG-1003, ¶106. In scenarios involving communication over a WWAN network, Rao-Oestvall would have used Rao's technique to intercept lower-priority network packets, while leveraging Oestvall's technique of denying access to services or resources, each of which would have reduced battery consumption. *Id*.

Moreover, the limitation's plain meaning does not require any mobile device configuration where policy application exclusively occurs when the device's Internet service activities is communicated through WWAN. SAMSUNG-1003, ¶107. Since Rao-Oestvall's device is configured to communicate over either WWAN or WLAN, and further configured to apply policies in either network, Rao-Oestvall renders this limitation obvious. *Id.* Indeed, it was well-known to implement Rao-Oestvall's techniques in the context of different networks (e.g., WWAN or WLAN) so that the resulting device selectively works for one or more of the networks based on various factors. *Id.*, ¶108 (citing SAMSUNG-1007).

Rao describes using policy 520 to enable application-aware prioritization, suggesting to a POSITA that policy 520 is applied "***when***" application 338 is classified as not running in the foreground. SAMSUNG-1003, ¶109. This is consistent with Rao's disclosures that policies 520 "specify[] client-side prioritization

of network communications related to applications" (SAMSUNG-1005, [0182]) and its motivation to address a scenario where "a network packet generated or received for an application running in the background [is] processed ahead of a network packet generated or received for the application running in the foreground" (*id.*, [0003]). A POSITA would have found obvious that the evaluation of polices by Rao-Oestvall to prioritize network transmissions of an application given its interaction state to satisfy any temporal requirement between the use of a policy and classification of an interaction state of an application recited by this limitation. SAMSUNG-1003, ¶109.

Therefore, a POSITA would have modified Rao's device to control access by the applications to communicate data for Internet service activities (e.g., VoIP, email, collaboration, online meeting, or desktop sharing) through the WWAN and WLAN modems, via "any suitable means and/or mechanism such as via an application programming interface (API)." SAMSUNG-1005, [0179]-[0195]; SAMSUNG-1003, ¶110. Further, in the combined device, control would have been performed, based on the policies Rao teaches, to selectively allow and block transmission of network packets to the network through the modem using filter 322 (as Rao teaches), when data for Internet service activities is communicated through a WWAN modem connection to the WWAN (as Rao and Oestvall teach). SAMSUNG-1005, [0102], [0179]-[0195], [0125], [0207]; SAMSUNG-1006, [0004];

SAMSUNG-1003, ¶110.

[1f]-[1g]

As described in [1e], Rao's device can ***selectively block and allow access*** based on the policies. SAMSUNG-1003, ¶111; SAMSUNG-1005, [0179]-[0199], [0207], [0102]. Further, the policies include determining "whether an application is running in the foreground or the background." SAMSUNG-1005, [0182]-[0194]. Accordingly, a POSITA would have understood and found obvious that, in Rao, ***access is selectively blocked or allowed based on determining whether the application is running in a background or foreground state*** because, as described in [1e], Rao's device determines whether a network packet generated by an application is allowed to be transmitted to a network or dropped at the device based on the policies including whether the application is running in the foreground or the background of the device. SAMSUNG-1003, ¶111.

As discussed in [1e], Oestvall supplements Rao. Again, Oestvall's system determines if an application (e.g., "untrusted" application) is in the background or foreground, and controls the application differently based on the determination. SAMSUNG-1003, ¶112; SAMSUNG-1006, [0022]-[0025]. Oestvall's device selectively allows "untrusted application 4" to run if it is in the foreground, and, if it is in the background, "prevent[s] background untrusted applications from 'polling' for data over a wireless network." SAMSUNG-1006, [0024]. Therefore, in Rao-

Oestvall, Oestvall would have modified Rao's device to selectively ***allow*** or ***block the access*** by an application (e.g., Oestvall's "untrusted application") to Rao's network interface (***WWAN modem***) ***based on a determination that the application is running in the background***, as taught in Oestvall. SAMSUNG-1003, ¶112.

[2]

As discussed for [1d] and [1f], Rao-Oestvall would have incorporated functionality to determine whether an application is presently running in the background. SAMSUNG-1003, ¶113. Because Rao's policies "define prioritization based on whether an application is running in the foreground or the background of the client ," Rao suggests the ability to detect when an application is not in the foreground. SAMSUNG-1005, [0182], [0188], [0189]. Moreover, because Rao attributes an application "in the foreground" as one that is "currently in active use by the user," a POSITA would have recognized that, conversely, an application in the background is one that is not currently in active use by the user. SAMSUNG-1005, [0003]; SAMSUNG-1003, ¶113.

Oestvall similarly discloses regulating application operation based on whether an application is running in the foreground or background. SAMSUNG-1006, [0021]-[0023]. A POSITA would have found obvious that differentiated use of "foreground" and "background" in Rao and Oestvall indicates example applications in the background are those where the user is not presently interacting with

the application through a user interface. SAMSUNG-1003, ¶114. Further, because of Rao's and Oestvall's differentiated treatment of foreground and background applications, a POSITA would have readily understood and found obvious that Rao-Oestvall determines which state an application is running ("***determine that the first end-user application is running in a background state***") to provide an intended treatment for that application. *Id.* Indeed, adapting the prioritization for an application or otherwise impacts its operation based on the application's direct user interaction were well-known by the Critical Date. *Id.*, ¶¶115-116 (citing SAMSUNG-1013; SAMSUNG-1010).

[3]

The Rao-Oestvall device includes a ***user interface***. SAMSUNG-1003, ¶117. Rao describes "[t]he policies 520 may be configurable by a user by any suitable means and/or mechanism. For example, the agent 326 may provide a configuration mechanism such as ***a user interface***, graphical or otherwise, design and constructed for configuring or specifying the policies 520." SAMSUNG-1005, [0183].

Rao-Oestvall's device would have incorporated functionality to output a user interface relating to various aspects of policies used for prioritization. SAMSUNG-1003, ¶118. Rao's "agent 326 may provide a configuration mechanism such as a user interface, graphical or otherwise, design and constructed for configuring or specifying the policies 520." SAMSUNG-1005, [0183]. Thus, a POSITA

would have found it obvious to configure the agent 326 in the Rao-Oestvall device to similarly provide a user interface to provide information regarding various aspects of applying of policies for prioritization, which would include information regarding why the differential traffic control policy is applied to the particular application. SAMSUNG-1003, ¶118. Moreover, Dive-Reclus[6] teaches blocking an "unsigned" application and provides an interface requesting a user to confirm whether the application should be blocked. SAMSUNG-1026, 19:17-25, Figure 2. User interfaces for providing information regarding policy evaluation were well-known by the Critical Date. SAMSUNG-1003, ¶¶119-122 (citing SAMSUNG-1010); SAMSUNG-1007, [0030]; SAMSUNG-1009, [0116].

[4]

As discussed for [3], Rao-Oestvall's device would have incorporated a user interface relating to policies used for prioritization, including options for setting how policies are used for prioritization. SAMSUNG-1003, ¶123. Rao's "agent 326 may provide a configuration mechanism such as a user interface, graphical or otherwise, design and constructed for configuring or specifying the policies 520." SAMSUNG-1005, [0183]. A POSITA would have found it obvious to configure agent 326 in the Rao-Oestvall device to similarly provide a user interface for "configuring or specifying" policies for prioritization. SAMSUNG-1003, ¶123. A

[6] *Id.*

POSITA would have also found obvious that the configuration or specification of policies represent "***service usage controls***" because they can be customized and/or modified to affect the application of policies ("***affect the first differential traffic control policy***"). *Id*. Indeed, user interfaces for configuring the types of policies Rao describes were well-known before the Critical Date. *Id.*, ¶¶124-125 (citing SAMSUNG-1010). Additionally, Dive-Reclus[7] teaches blocking an "unsigned" application and provides an interface requesting a user to confirm whether to block the application. SAMSUNG-1026, 19:17-25, Figure 2; SAMSUNG-1003, ¶126.

[9]

As discussed for [1e], Rao-Oestvall's improved agent would have leveraged several types of APIs in regulating applications. SAMSUNG-1005, [0110], [0166], [0190], [0205]. Rao's agent 326 is part of a "network stack" with "network layers," including "applications 338a-338n," "gateway 340," "peer computing device," and "remote access client 120." *Id.*, [0185]. For example, "stacks 310a and 310b" "represent network stacks of computing devices 102a-120b or gateway 340, such as any of the computing devices 102 and the gateway 340 illustrated in FIGS. 1A-1C, 2A, or 5A." *Id.*, [0196]. Thus, a POSITA would have understood and found obvious that Rao-Oestvall's improved agent (an element of Rao's Figure 5A environment) is part of the network stacks, as Rao describes.

[7] *Id.*

Further, because the improved agent leverages one or more of Rao's APIs, a POSITA would have understood and found obvious that a network stack including the agent 326 is "***integrated with***" the API. SAMSUNG-1003, ¶127; SAMSUNG-1005, [0106], [0166], [0190], [0203].

For example, in Rao, "[an] application hooking is implemented via an application programming interface (API)," so that "the hooking of network packets occurs at the network layer of the network stack 310a-310n." SAMSUNG-1005, [0166]. Rao also discusses a network architecture of a "network stack." *Id.*, [0100]. Indeed, network configurations similar to those Rao describes where an API is "***integrated with***" a networking stack were conventional by the Critical Date. SAMSUNG-1003, ¶¶128-129 (citing SAMSUNG-1021).

[10]

As described for [9], Rao-Oestvall's device would have been configured to operate within one of Rao's network stack. SAMSUNG-1005, [0185], [0190], [0196], Figure 3A; SAMSUNG-1003, ¶130. The network stacks include at least an "application layer" that, for example, allows applications 338a-338n to establish "an application level session." SAMSUNG-1005, [0203], [0100], [0133], [0198].

A POSITA would have understood and found obvious that packet interception, as provided by Rao-Oestvall, involves identifying the data traffic generated

by applications because a processor identifies a packet in the process of determining that the identified packet should be intercepted. SAMSUNG-1003, ¶131. Rao describes several examples of packet intercepting techniques, each of which a POSITA would have understood and found obvious involves identifying packets (examples of application traffic flows). *Id.*; SAMSUNG-1005, [0110]-[0111], [0137], [0143], [0158].

A POSITA would have also found obvious that Rao-Oestvall is configured to "***identify application traffic flows prior to flows entering the network stack***" through Rao's disclosure of filter process 322 intercepting a network packet "before [the packet] reaches the network stack 310a-310b." SAMSUNG-1005, [0166]; SAMSUNG-1003, ¶132. Further, a POSITA would have understood and found obvious that, based on Rao's architectures (e.g., Figures 3A, 6A), packet interception (and packet identification) occurs at the "application layer," which sits at a general network layer architecture. SAMSUNG-1003, ¶132.

[13]

As described in §III.A.3, Rao-Oestvall would have applied policies based on an application's present interaction state (foreground/background). A POSITA would have understood and found obvious that the present interaction state represents an example of "***device usage state***" as it indicates whether the application is currently made available for display on a mobile device, and therefore, available

for active use by a user. SAMSUNG-1003, ¶133. In Rao, an application is not in the background if it is "currently in active use by the user." SAMSUNG-1005, [0003]. A POSITA would have recognized that the Rao device performs ongoing monitoring of which applications are running, and which are running in the foreground or background, so it can dynamically determine whether to apply policies. SAMSUNG-1003, ¶134; SAMSUNG-1005, [0182], [0188]. Rao also includes as examples other device usage states relating to the network such as congestion state. SAMSUNG-1005, [0195]; SAMSUNG-1003, ¶135. Likewise, Oestvall's untrusted application is deemed to be in the background if "the display shows a screen saver or is actually turned off." SAMSUNG-1006, [0023]-[0024]. SAMSUNG-1003, ¶136. Thus, Rao-Oestvall would have been configured to adjust policy evaluation relating to application-related prioritization ("***dynamically change the application of the first differential traffic control policy***") based on the application's present interaction state ("***device usage state***"). SAMSUNG-1003, ¶137.

[14]

As described in §III.A.3, Rao-Oestvall's device would have applied policies based on an application's present interaction state (foreground/background). A POSITA would have understood and found obvious that the present interaction state represents an example of "***user interaction with the device***" as it indicates

whether the application is currently made available for a display on a mobile device, and therefore, available for active use by a user. SAMSUNG-1003, ¶138. In Rao, an application is not in the background if it is "currently in active use by the user." SAMSUNG-1005, [0003]. A POSITA would have recognized that the Rao device performs ongoing monitoring of which applications are running, and which are running in the foreground to permit ***user interaction with the device***, so it can dynamically determine whether to apply policies. SAMSUNG-1003, ¶139; SAMSUNG-1005, [0182], [0188]. Rao also includes as examples other device usage states relating to the network such as congestion state. SAMSUNG-1005, [0140] ("an interactive user session"), [0210], [0133]. SAMSUNG-1003, ¶140. Likewise, Oestvall describes a ***foreground*** application as "present[ing] a user interface with which a user can interact" and provides a "scheme" that "knows which application is in foreground and which ones are in back ground." SAMSUNG-1006, [0006], [0022]; SAMSUNG-1003, ¶141. Thus, Rao-Oestvall would have been configured to adjust policy evaluation relating to application-related prioritization ("***dynamically change the application of the first differential traffic control policy***") based on monitoring whether the application is "currently in active use by the user" (as taught by Rao) or "present[ing] a user interface with which a user can interact" (as taught by Oestvall) ("***based on monitoring of user interaction with the device***"). SAMSUNG-1003, ¶142.

[16]

As described in §III.A.3, a POSITA would have configured Rao-Oestvall's device to apply policies based on an application's present interaction state (foreground/background). SAMSUNG-1003, ¶143. Oestvall describes preventing an untrusted application from "being given any services or consuming any resources" based on whether the application is "in the background or foreground on display." SAMSUNG-1006, [0023]. A POSITA would have understood and found obvious that a present interaction state of an application (foreground/background) represents an example of "***application behavior***" because, for example, the application's change between its states can indicate the application behavior. SAMSUNG-1003, ¶143. The '701 Patent's supports this, describing "application behavior" of an application as including "conference meeting services, video streaming, content update, software update," and "running in the background and continuing to consume potentially." SAMSUNG-1001, 8:15-22; SAMSUNG-1003, ¶144. Further, Oestvall's untrusted application is deemed to be in the background if "the display shows a screen saver or is actually turned off." SAMSUNG-1006, [0024]. Likewise, Rao's application is in the background if it is "currently in active use by the user." SAMSUNG-1005, [0003]. The Rao-Oestvall device would have been configured to apply a policy to perform application-related prioritization based on the application's present interaction state ("***configured to associate the first end-user***

application with the first differential traffic control policy based on an application behavior"). SAMSUNG-1003, ¶145.

[19]

Rao-Oestvall's device would have included an improved agent 326 for performing various management operations for applying policies for packet-related and application-related prioritization ("***based on the applied differential traffic policy***"). SAMSUNG-1005, [0182]; SAMSUNG-1006, [0023]. As discussed in §III.A.3-4, a POSITA would have configured Rao-Oestvall's improved agent to prevent an untrusted application from running or being given access to a service that consumes resources. SAMSUNG-1003, ¶146. In Oestvall, this is accomplished by sending a "control signal" that results in preventing application functionality. SAMSUNG-1006, [0023]. A POSITA would have understood and found obvious that such restriction would have precluded an application from sending user interface messages (e.g., "***block, modify, remove, or replace…user interface messages generated by the first end-user application***"). SAMSUNG-1003, ¶146. As Oestvall describes, the restriction denies "system resources" and "CPU activity" that would have been necessary for an application to generate and output user interface messages. SAMSUNG-1006, [0021]. Moreover, Dive-Reclus[8] teaches blocking an "unsigned" application and provides an interface over the

[8] *Id.*

blocked application asking whether it should be blocked. SAMSUNG-1026, 19:17-25, Figure 2.

[20]

As discussed in [1e]-[1f], Rao-Oestvall's processor(s) are ***configured to control application access and configured to selectively block access by the first end-user application***. SAMSUNG-1003, ¶147.

Further, Rao's device includes a "network stack" having "one or more protocols, such as the TCP/IP protocol over Ethernet or a wireless protocol, such as IEEE 802.11," and further having "one or more network drivers supporting the one or more layers, such as a TCP driver or a network layer driver." SAMSUNG-1005, [0100], Figure 1C. Rao's network packets can be communicated "via a secure socket layer." SAMSUNG-1005, [0035]; SAMSUNG-1003, ¶148.

Rao's device "may intercept network packets of one or more applications 338a-338n transparently to the application 338a-338n, the gateway 340, a peer computing device, ***and any of the network layers of a network stack***." SAMSUNG-1005, [0185]. Such a blocking technique in Rao is beneficial because it allows the prioritization technique to "support any type of application 338a-338n on the client 105." SAMSUNG-1005, [0185]; SAMSUNG-1003, ¶149.

Therefore, a POSITA would have understood and found obvious that Rao-Oestvall enables applications to transmit network packets to a remote server on the

Internet by transmitting requests to a network stack. SAMSUNG-1003, ¶150. Further, it would have been obvious that such requests include requests to the network stack to open a socket (e.g., using the "secure socket layer"), connect to the socket, and/or write data to the socket. *Id.* (citing SAMSUNG-1034; SAMSUNG-1035). Further, based on Rao, a POSITA would have found it obvious to selectively block such requests to the network stack because performing such an operation would allow Rao's prioritization technique to "support any type of application" on a device, as Rao teaches. *Id.* (citing SAMSUNG-1005, [0024]-[0031], [0106], [0166], [0180]-[0196], [0203]); *see supra* [9].

[25]

As described in [1d], Rao-Oestvall's processor(s) ***are configured to determine when the first end-user application is running in a background state or as a foreground application***. SAMSUNG-1003, ¶151.

Further, as discussed in §III.A.3, Rao-Oestvall would have applied policies based on an application's present interaction state (foreground/background). A POSITA would have found obvious that the present interaction state represents an example of a "***state of user interface priority***" as it indicates whether the application is prioritized for display on a mobile device. SAMSUNG-1003, ¶152. Further, it would have been obvious that the priority states of applications relative to each other in a user interface ("***state of user interface priority for the application***")

are associated with, or represent, present interaction states of the applications (foreground/background). *Id.*; SAMSUNG-1027, 6:31-49.

Oestvall recognizes that, "[i]n conventional multi-tasking computers running several different applications at the same time, an application will issue a software interrupt to the operating system," and "interrupts from different applications are prioritised and queued by an interrupt handler." SAMSUNG-1006, [0005]. Oestvall also teaches prioritization based on a "trust" classification of an application, which a POSITA would have understood and found obvious is another example of a "***state of user interface priority***." *Id.*, [0015]; SAMSUNG-1003, ¶153.

Similarly, Rao's policies "define prioritization based on whether an application is running in the foreground or the background of the client," and thus, a POSITA would have found obvious that applying a policy involves classification based on a user interface priority. SAMSUNG-1005, [0182]; SAMSUNG-1003, ¶154. Thus, a POSITA would have found obvious that Rao-Oestvall applies policies to perform application-related prioritization based on the application's present interaction state (foreground/background), as Rao and Oestvall teach ("***determine when the first end-user application is running in a background state or as a foreground application***"). SAMSUNG-1003, ¶¶154-157 (citing SAMSUNG-1013; SAMSUNG-1024; SAMSUNG-1025).

B. GROUND 1B: Rao-Oestvall-Montemurro Renders Claims 5-8, 11, 17-18, and 23-24 Obvious

1. Montemurro

Montemurro describes "dual or multi-mode devices" with "radio access technologies that provide access to" multiple network types, including WLAN and WWAN. SAMSUNG-1007, [0003], [0001]. But "[t]here are costs associated with application access from these different network[,]" and "[i]t is therefore desirable to have a mechanism that seeks to optimize communications for multi-mode capable devices." *Id.*, [0004]; SAMSUNG-1003, ¶¶59-60.

Montemurro relies on policies to "configure connections and routes," which is accomplished using a "rules engine" that "evaluates [the] policies on a status change (e.g., network availability, time of day, etc.) to configure a routing table." SAMSUNG-1007, [0011]. The rules engine and the routing table "provide[] an appropriate connection to an application for its respective communications." *Id.*; SAMSUNG-1003, ¶61. Figure 2 (below) shows "policy-based data routing for multi-mode operations of device 102 for communicating with network infrastructure." SAMSUNG-1007, [0024].

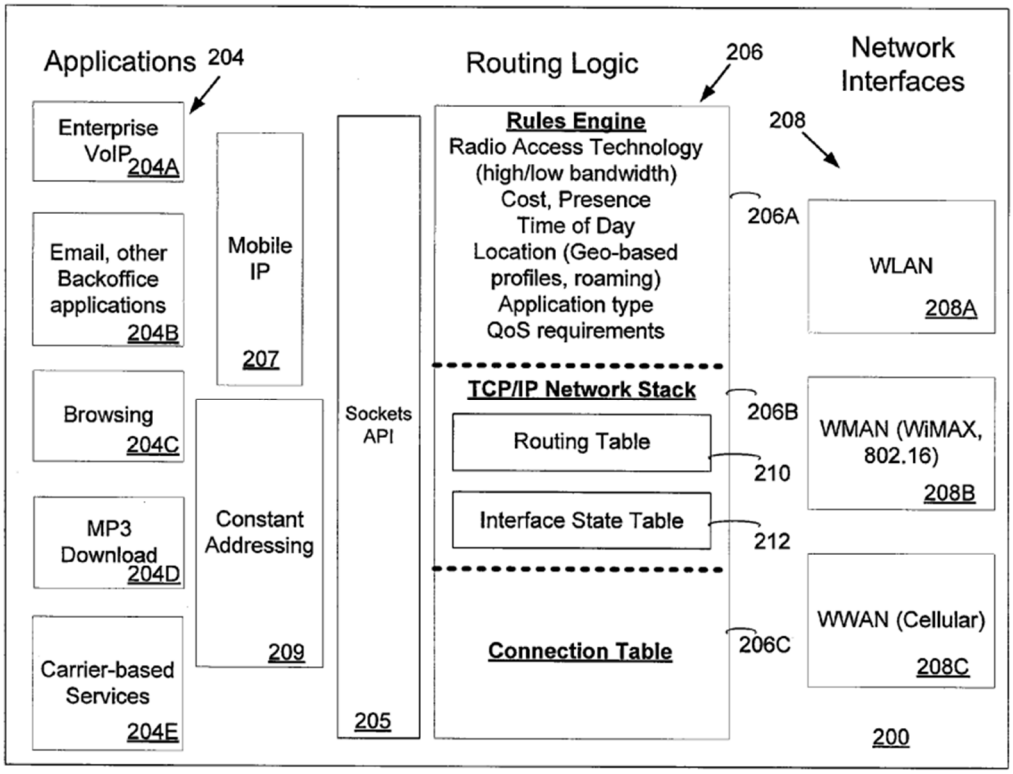

Figure 2

SAMSUNG-1007, Figure 2

Device 102 includes "a plurality of applications 204, routing logic 206, and network interfaces 208." SAMSUNG-1007, [0025]. Routing logic 206 further includes rules engine 206A as a "policy-based mechanism using rules to configure TCP/IP network stack 206B and connection table 206C to coordinate communications for applications 204 using communications interfaces [208]." *Id.*, [0027]. Rules engine 206A "configures the communication operations with a set of rules/policies" for "various factors such as radio access technology (e.g., for high/low bandwidth properties), cost, presence, time of day, location (e.g., geo-based policies, network roaming), destination IP address, application type," etc.

Id., [0029]. Network interfaces 208 include "an interface for each of WLAN 208A, WMAN 208B and WWAN 208C network communications." *Id.*, [0028]; SAMSUNG-1003, ¶¶62-64.

2. Rao-Oestvall-Montemurro

As described in §III.A.3, a POSITA would have configured Rao-Oestvall to apply policies to prioritize packet transmission and application functionality to achieve several types of operational efficiencies. SAMSUNG-1005, [0179]-[0195], Figure 5A. In implementing this combination, a POSITA would have recognized opportunities to provide additional efficiencies in scenarios where the Rao-Oestvall device has access to multiple networks, motivating a POSITA to seek solutions beyond Rao and Oestvall to achieve such additional efficiencies. SAMSUNG-1003, ¶158.

Given Montemurro's broad focus to "optimize communications using a policy-based mechanism to configure connections and routes," a POSITA would have found Montemurro's teachings to be reasonably pertinent to the policies applied by Rao-Oestvall for prioritization. SAMSUNG-1007, Abstract; SAMSUNG-1003, ¶159. Like Oestvall, Montemurro describes embodiments where its policies are used to "disable or enable an application for a user." SAMSUNG-1007, [0027]. This would have led a POSITA to consider Montemurro's broader teachings in Figure 2 relating to "policy-based data routing for multimode operations." *Id.*,

[0024]. Incorporation of such teachings into Rao-Oestvall would have yielded several improvements described in Montemurro, such as the ability to "offer different usage models depending on the mode of wireless operation selected." *Id.*, [0003]. This configuration would have improved Rao-Oestvall by enabling prioritization to further account for several considerations, such as "bandwidth, range, cost, and power consumption." *Id.* Further, policies applied by the Rao-Oestvall-Montemurro device (or "Rao-Oestvall-Montemurro") would have been "responsive to various factors such as Radio Access Technology (high/low bandwidth), cost, presence, time of day, location, application type and quality of service (QoS) requirements among others to optimize communications," as Montemurro describes. *Id.*, [0011]; SAMSUNG-1003, ¶159.

A POSITA would have had a reasonable expectation of success in combining Rao-Oestvall and Montemurro. SAMSUNG-1003, ¶160. Rao provides non-limiting disclosure of network types to which device 102 may connect using network interface 118. SAMSUNG-1005, [0095], [0125]. Montemurro's use of routing tables would have advanced Rao's motivation to enable multiple types of network connectivity. SAMSUNG-1007, [0024]; SAMSUNG-1003, ¶160. Additionally, both Rao and Montemurro expressly teach use of policies to regulate device functions (e.g., prioritizing network traffic in Rao, connecting to a suitable available network in Montemurro). SAMSUNG-1005, [0182]; SAMSUNG-1007,

[0011]. A POSITA would have understood these disclosures as generally improving network performance on a mobile device, making the combination a natural option to achieve the advantages discussed above. SAMSUNG-1003, ¶160. Additionally, configuring Rao-Oestvall to leverage Montemurro's teachings would have required only routine programming knowledge well within the POSITA's skill. *Id.* The change would have involved (1) combining prior art elements according to known methods to yield predictable results; and (2) use of known techniques to improve similar devices in the same way. *KSR*, 550 U.S. at 415-421. Rao-Oestvall-Montemurro would have used policies to generally regulate applications, including policies used to prioritize network packet transmissions (as Rao describes) and policies used to select the most suitable network connection (as Montemurro describes). SAMSUNG-1003, ¶160.

3. Analysis

[5]

Rao-Oestvall-Montemurro would have incorporated Montemurro's functionality to apply a rules engine to coordinate connectivity for applications. SAMSUNG-1007, [0027]; SAMSUNG-1003, ¶161.

In certain scenarios, a rules engine would have applied an instance of a routing table ("***multimode profile***") with information for multiple networks available for selection. SAMSUNG-1007, [0030]. For example, "if both the WLAN and

WWAN radios…of [a] device [] are connected to their respective networks 104 and 106, there will be a route associated with each network." *Id.* The rules engine "executes" the instance of the routing table "to ensure that data goes out to the most appropriate network" and also to "determine which interface would be best used to service a particular application." *Id.*, [0035]; SAMSUNG-1003, ¶162.

In scenarios where multiple networks are available for selection, it would have been obvious that the information specified by the instance of the routing table includes policies for each available network. SAMSUNG-1003, ¶163. In Montemurro, policies are "responsive to various factors such as Radio Access Technology, high/low bandwidth, cost, presence, time of day, location, application type and quality of service (QoS) requirements." SAMSUNG-1007, [0011], [0024], [0027], [0029]. A POSITA would have understood and found obvious that an instance of the routing table with information for multiple network available for selection includes "***different policies for different networks***." SAMSUNG-1007, [0011], [0024], [0027], [0029]; SAMSUNG-1003, ¶163. Moreover, use of different policies for enabling capabilities for different networks (e.g., phone network, local network) was conventional by the Critical Date. SAMSUNG-1003, ¶164 (citing SAMSUNG-1026). For example, Dive-Reclus[9] includes a table showing

[9] *Id.*

different permission decisions for applications submitting API calls to request network access.

Installed	PhoneNetwork	ReadUserData	WriteUserData	LocalNetwork	Certificate
Good.exe	Not granted	Granted	Not granted	Granted	Checked OK – click to view root signing cert
Bad.exe	Not granted	Not granted	Not granted	Not granted	Unsigned

SAMSUNG-1026, 20

[6]

As described for [5], it would have been obvious that, in some scenarios, information specified by an instance of the routing table ("***multimode profile***") includes "***different policies for different networks***." SAMSUNG-1007, [0011], [0024], [0027], [0029]; SAMSUNG-1003, ¶165. The rules engine "executes" the routing table "to ensure that data goes out to the most appropriate network" and also to "determine which interface would be best used to service a particular application." SAMSUNG-1007, [0035]. For example, "if both the WLAN and WWAN radios…of [a] device [] ***are connected*** to their respective networks 104 and 106, there will be a route associated with each network." *Id.*, [0030]. In this example, a

POSITA would have understood and found obvious that Rao-Oestvall-Montemurro's rules engine would execute the instance of the routing table ("***select a traffic control policy from the multimode profile***") based on the type of network connections of wireless radios (WLAN, WWAN), and thus, when a routing option is selected from the routing table instance, the selection ("***select a traffic control policy***") is based on the types of current network connections of the device ("***type of network connection currently in use by the device***"). SAMSUNG-1003, ¶165. Moreover, Dive-Reclus[10] teaches permission decisions regulating network access by third-party applications that use API calls. SAMSUNG-1026, 16:23-17:28, 20:1-12; SAMSUNG-1003, ¶166.

Further, Montemurro's "time-based rule and/or a location-based rule" determines where the device is located at a given time and which network is available in that location at the time and then changes the traffic route depending on the determination. SAMSUNG-1007, [0039]. Therefore, Montemurro's policies are based on the ***network currently*** available or ***currently in use by the device***. SAMSUNG-1003, ¶167.

[7]

As discussed in [6], Montemurro describes "if both the WLAN and WWAN radios…of [a] device [] are connected to their respective networks 104 and 106,

[10] *Id.*

there will be a route associated with each network." SAMSUNG-1007, [0030]. In this example, a POSITA would have understood and found obvious that Rao-Oestvall-Montemurro's rules engine would execute the routing table ("***select a traffic control policy from the multimode profile***") when the device is connected to a WLAN connection ("***when the type of network connection is at least one type of WLAN connection***"). SAMSUNG-1003, ¶168.

Further, Montemurro references a "local LAN" and a POSITA would have found obvious that the "local LAN" is a type of "***network connection from the WLAN to the Internet***." SAMSUNG-1003, ¶169; SAMSUNG-1007, [0039]; SAMSUNG-1009, [0032]. A POSITA would have also found obvious that Rao-Oestvall-Montemurro enables connectivity to several types of network connections implemented by network components in the combination (e.g., base station, WLAN components, access points, etc.) between the WLAN and the Internet such that the device considers a "***type of WLAN connection***" in "***selecting a traffic control policy from the multimode profile***," as discussed above. SAMSUNG-1003, ¶170 (citing SAMSUNG-1007).

[8a]

The analysis for the "first end-user application" ([1d]) applies similarly for the "second end-user application." SAMSUNG-1003, ¶171.

Notably, none of Rao, Oestvall, and Montemurro indicates that its respective

techniques are limited to any specific application. *See, generally,* SAMSUNG-1005, SAMSUNG-1006, SAMSUNG-1007. Additionally, Rao's policies "may be specified hierarchically to account for multiple applications 338a-338n and/or multiple protocols that may be executed on the client 105 at any point." SAMSUNG-1005, [0182]. Because Rao-Oestvall-Montemurro would have been configured to apply prioritization to multiple applications, a POSITA would have found obvious that the combination renders elements of claim 8 obvious in the same manner as explained above for the "***first end-user application***." SAMSUNG-1003, ¶172.

[8b]

Regarding "***control application access for Internet service activities by the second end-user application similar to the control of application access for the first end-user application***," the analysis for the "first end-user application" ([1e]) applies similarly for the "second end-user application." SAMSUNG-1003, ¶173.

Regarding "***except the control of application access for Internet service activities by the second end-user application is based on a second differential traffic control policy that can be set different from the first differential traffic control policy***," Montemurro describes multiple policies for different applications—"first end-user application" and "second end-user application," as shown in [5]. SAMSUNG-1003, ¶174.

[11]

As described for [5], in Rao-Oestvall-Montemurro, a rules engine, in certain scenarios, applies an instance of a routing table ("***multimode profile***") with information for multiple networks available for selection. SAMSUNG-1007, [0011], [0024], [0027], [0029]; SAMSUNG-1003, ¶175. For example, "if both the WLAN and WWAN radios…are connected to their respective networks 104 and 106, there will be a route associated with each network," as shown in the table below. SAMSUNG-1007, [0030].

Source IP	Destination IP	Device Interface (208)
192.168.1.20	0.0.0.0	WLAN (208A)
67.69.20.142	0.0.0.0	WWAN (208C)

In Montemurro, a device "has mobile IP capabilities" to "permit the device to attach to the Internet (IP network) via a home and one or more foreign networks." SAMSUNG-1007, [0037]. Since Montemurro contemplates devices with capabilities to connect to both home and foreign networks, a POSITA would have found obvious that the routing table is similarly configured to provide routing options for various types of networks, including a "***home WWAN***" and "***roaming WWAN***." SAMSUNG-1003, ¶176. Moreover, because Montemurro's device is

operable on various networks (including WWAN), a POSITA would have understood and found obvious that the routing table is similarly configured to provide routing options for WWAN for a home network ("***home WWAN***") and WWAN for roaming to a foreign network ("***roaming WWAN***"). SAMSUNG-1003, ¶177; SAMSUNG-1007, [0030], [0037]. Indeed, by the Critical Date, WWAN was well-known for being implemented for different settings, such as home and roaming WWANs. SAMSUNG-1003, ¶177. Montemurro also offers non-limiting disclosure of WWAN, e.g., "cellular technologies like GSM/GPRS EDGE, UTMS, HSPA, CDMA, WCDMA, etc.," which a POSITA would have understood and found obvious includes roaming and home WWAN networks. SAMSUNG-1003, ¶177; SAMSUNG-1007, [0011], [0024], [0027], [0029].

Therefore, a POSITA would have perceived network selection in Rao-Oestvall-Montemurro to provide connectivity to one of several available WWAN networks ("***connection to a roaming WWAN network and a connection to a home WWAN network***") to represent an obvious configuration as this reduces costs and complexity, consistent with Montemurro. SAMSUNG-1007, [0029]-[0038]; SAMSUNG-1003, ¶177. It was well-known and obvious by the Critical Date to use and make selective connection to a home network (e.g., "***home WWAN***") and a roaming network (e.g., "***roaming WWAN***"). SAMSUNG-1003, ¶¶177-178 (citing SAMSUNG-1022; SAMSUNG-1023).

Further, in Rao-Oestvall-Montemurro, policies are "responsive to various factors," including "cost, presence, time of data, location, e.g., geo-based policies, network roaming)." SAMSUNG-1007, Abstract, [0029]. Thus, it would have been obvious to configure Rao-Oestvall-Montemurro's rule engine to select a policy to provide connectivity to one of several available WWAN networks while not connecting to another of the WWAN networks ("***apply the first differential policy to one of but not both of a connection to a roaming WWAN network and a connection to a home WWAN network***") for known benefits of reducing costs and complexity. SAMSUNG-1007, [0029]-[0038]; SAMSUNG-1003, ¶179.

[17]

As discussed for [5], Rao-Oestvall-Montemurro would have incorporated functionality for applying a rules engine to coordinate connectivity for applications by applying a routing table ("***multimode profile***") specifying policies for different networks. SAMSUNG-1007, [0011], [0024], [0027], [0029]. In Rao-Oestvall-Montemurro, the rules engine "executes" the routing table to "ensure that data goes out to the most appropriate network (via respective network interface)" and "interacts with the connection API's to determine which interface would be best used to service a particular application." *Id.*, [0035]. Thus, a POSITA would have understood and found obvious that Rao-Oestvall-Montemurro regulates access to con-

nection events to several networks, including a WWAN network ("***WWAN network access events***"). SAMSUNG-1003, ¶180.

Further, as discussed above in §III.B.2, Rao-Oestvall-Montemurro would have regulated network access by applications through use of policies. Particularly, a POSITA would have incorporated into Rao-Oestvall-Montemurro Oestvall's regulation of untrusted applications running in the background to "prevent[] untrusted application 4 from running, e.g., being given any services or consuming any resources." SAMSUNG-1006, [0023]; SAMSUNG-1003, ¶181. Further, Montemurro's "[p]olicies may be responsive to various factors" including "time of day." SAMSUNG-1007, Abstract, [0029]. Thus, in scenarios where the rules engine executes a policy to identify a WWAN network as the "most appropriate network," a POSITA would have understood and found obvious that a policy applied by Rao-Oestvall-Montemurro regulates both the type of network access and the circumstances during which an application can have access to network services such that the Rao-Oestvall-Montemurro device "***can only have WWAN network access during particular time windows***" (e.g., time windows during which a policy specifies network connectivity). SAMSUNG-1006, [0023]; SAMSUNG-1007, [0035]; SAMSUNG-1003, ¶181. Indeed, use of policies to limit network access during particular time windows was conventional by the Critical Date. SAMSUNG-1003, ¶182 (citing SAMSUNG-1010).

[18]

As discussed in §III.B.2, policies applied by Rao-Oestvall-Montemurro (including "***first differential traffic control policy***") would have been "responsive to various factors such as Radio Access Technology (high/low bandwidth), cost, presence, time of day, location, application type and quality of service (QoS) requirements among others to optimize communications," as Montemurro describes. SAMSUNG-1007, [0011]; SAMSUNG-1003, ¶183.

Montemurro's "network infrastructure" provides support for services provided to a wireless device. SAMSUNG-1007, [0014]. Examples of "network infrastructure" include "a gateway server, a provisioning server, a discovery, and an application repository," each of which are examples of a "***network element***." SAMSUNG-1003, ¶184. Services provided by the network infrastructure include "Administrative and Management Service dealing with policies, such as those specifying allowed applications for users, services available to applications and more." SAMSUNG-1007, [0015]-[0016]. Moreover, Rao's remote access client 120 "receive[s] an indication of network congestion" and thereby "controls and manages the prioritization of network communications," which would have adjusted policy evaluation by the device. SAMSUNG-1005, [0195]. A POSITA would have understood and found obvious, as an example service provided by Montemurro's network infrastructure, a server ("***network element***") provides an

update for a service dealing with policies, and accordingly the Rao-Oestvall-Montemurro device would have been configured to update policies relating to application operation ("***update the differential traffic control policy***") based on the update from the server ("***information received from [the] network element***"). SAMSUNG-1003, ¶184. For example, the update may specify a new allowed application, and Rao-Oestvall-Montemurro would have updated policies to reference a name of the new allowed application and thereby permit regulation of the newly allowed application, consistent with Rao. SAMSUNG-1005, [0182]. Moreover, techniques for adapting policy configurations based on information received from network elements were conventional by the Critical Date. SAMSUNG-1003, ¶¶185-186 (citing SAMSUNG-1010).

[23]

As discussed for [5] and [11], Rao-Oestvall-Montemurro's rules engine can apply an instance of a routing table ("***multimode profile***") with information for multiple networks available for selection. SAMSUNG-1007, [0011], [0024], [0027], [0029]-[0030]; SAMSUNG-1003, ¶187.

As discussed for [5] and [11], Montemurro contemplates devices with capabilities to connect to various networks, including WWAN as well as both home and foreign networks. SAMSUNG-1007, [0030], [0037]. Thus, a POSITA would have found obvious that the routing table is similarly configured to provide routing

options for various networks, including "***home WWAN***" and "***roaming WWAN***." SAMSUNG-1003, ¶¶188-189; SAMSUNG-1007, [0029]-[0038]. A POSITA would have understood network selection in Rao-Oestvall-Montemurro to provide connectivity to one of several available WWAN networks ("***connect to a home WWAN and a roaming WWAN***") as representing an obvious configuration because it reduces costs and complexity, consistent with Montemurro. SAMSUNG-1003, ¶¶188-189. For example, it was well-known and obvious by the Critical Date to use and make selective connection to home and roaming networks. SAMSUNG-1003, ¶¶190-191 (citing SAMSUNG-1022; SAMSUNG-1023).

Further, in Montemurro, each policy specifies a set of connection factors, such as "Radio Access Technology, high/low bandwidth, cost, presence, time of day, location, application type and quality of service (QoS) requirements." SAMSUNG-1007, [0011]. A POSITA would have understood and found obvious that a set of connection factors specified within a policy represents a "***sub-policy***" in that it permits connectivity to an associated network, and thereby enables Montemurro's "policy-based mechanism to configure connections and routes." *Id*., Abstract. Thus, where the routing table has routing options for home and foreign networks, the routing table includes a first set of connection factors for the home network ("***first sub-policy when Internet data service is provided through a home WWAN***") and a second set of connection factors for the foreign network ("***second***

sub-policy when Internet data service is provided through a roaming WWAN"). SAMSUNG-1007, [0011], [0024], [0027], [0029]; SAMSUNG-1003, ¶192. Further, Rao's policies are "specified hierarchically to account for multiple applications" and/or "multiple protocols that may be executed on [a] client [] at any point," demonstrating that hierarchical policy structures for adjusting the types of device functionality provided by Rao-Oestvall-Montemurro was conventional by the Critical Date. SAMSUNG-1005, [0182]; SAMSUNG-1003, ¶192.

[24]

As discussed for [23], a POSITA would have understood and found obvious that a routing table applied by Rao-Oestvall-Montemurro's rules engine is configured to provide routing options for various networks described in Montemurro. SAMSUNG-1003, ¶193. As described in [23], a POSITA would have understood and found obvious that a set of connection factors specified within a policy represents a "***sub-policy***" in that they permit connectivity to an associated network, and thereby enables Montemurro's "policy-based mechanism to configure connections and routes." SAMSUNG-1007, [0011], Abstract. Thus, where the routing table has routing options for different networks, the routing table includes different sets of connection factors for different networks ("***first, second, and third sub-policies applicable respectively to Internet data service provided using the WWAN modem and three different network types from the network types***"). SAMSUNG-

1007, [0011], [0024], [0027], [0029].

Montemurro identifies several non-limiting example WWANs, including "cellular technologies like GSM/GPRS EDGE, UTMS, HSPA, CDMA, WCDMA, etc." SAMSUNG-1007, [0003]. It was well-known that GSM and CDMA were used for 2G standards, and WCDMA was used for a 3G standard. SAMSUNG-1003, ¶194. LTE (4G) was well-known before the Critical Date, and a POSITA would have considered LTE (4G) as other example cellular technologies. *Id.* With these teachings, a POSITA would have understood and found obvious that the routing table is configured to accommodate "***three different network types from the network types consisting of 2G, 3G, 4G, home, and roaming***." *Id.*; SAMSUNG-1007, [0022], [0029], [0037]; SAMSUNG-1009, [0031].

C. GROUND 1C: Rao-Oestvall-Araujo Renders Claims 12, 15, and 21-22 Obvious

1. Araujo

Araujo describes "a power-management policy" for managing a "machine's power usage." SAMSUNG-1011, Abstract. Araujo's policy can be implemented on "[e]lectronic devices," such as "computers, wireless telephones, audio/video equipment, etc.)" *Id.*, [0014]. The policy is applied to "justify [a program] consuming power, depending on what the program is doing." *Id*, [0004]. By implementing this policy, a device can better "use the energy in a way that strikes a balance between providing functionality and maintaining longevity of the charge."

Id., [0001]; SAMSUNG-1003, ¶¶65-66.

In Araujo, programs are classified using various criteria, and selectively provided resources based on their classifications. SAMSUNG-1011*,* [0027]. A program's ability to consume power is "based on a finding as to whether the program's status justifies the consumption of power under the circumstances that are present." *Id.* For example, a "very important person" (VIP) status allows a program to "consume power in situations where other programs would not be permitted to consume power." *Id.*; SAMSUNG-1003, ¶67.

Araujo's device provides resources to the applications based on whether the applications are "worthy" to consume power. SAMSUNG-1011*,* [0024]. For example, Araujo explains that a program generates "a request to perform an action using a particular device, such as "a request to send data over a wireless network" using a "wireless network card." *Id.,* [0020], [0024]; SAMSUNG-1003, ¶¶68-69. The device can then perform various responsive operations, including allowing the request (SAMSUNG-1011, [0035], Figure 3(302)) and blocking the request (*Id.*, [0035], [0050], Figure 4(406)).

The responsive operations are provided by a "request deflector component" that is "interposed" between a "program" and a "driver" of a "device," and configured to "intercept[] requests and respond[] to the requests based on power management considerations before the request reach[es] a device driver."

SAMSUNG-1011, [0024], [0050]; SAMSUNG-1003, ¶¶70-71. Figure 6 (below) shows an example of the "request deflector component."

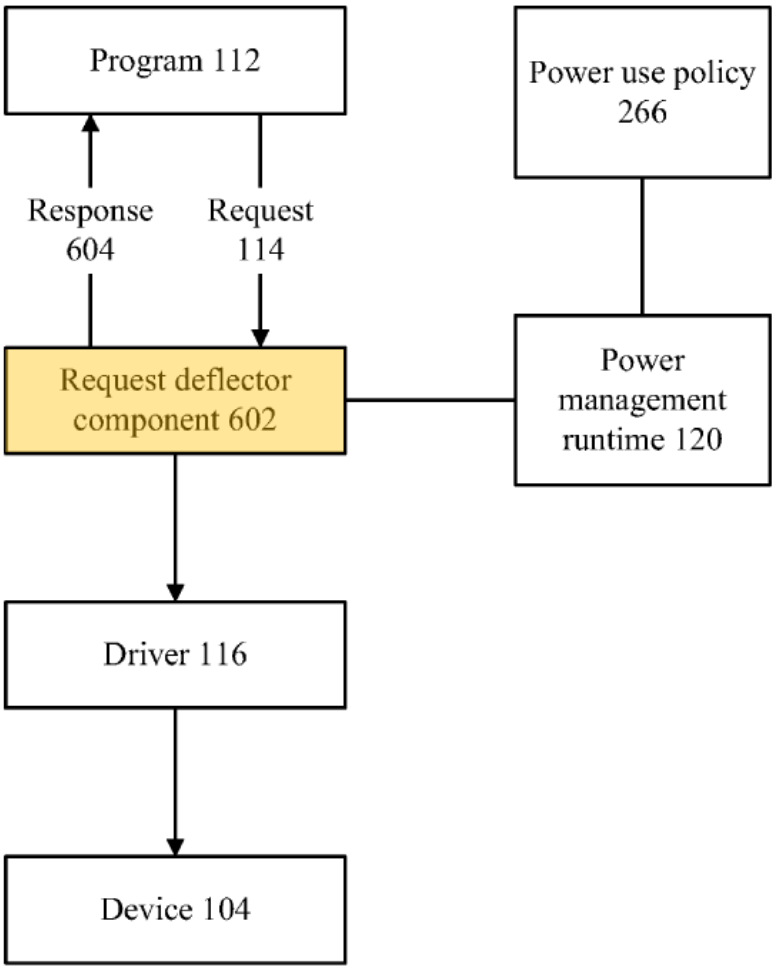

SAMSUNG-1011, Figure 6

2. Rao-Oestvall-Araujo

A POSITA would have found it obvious to modify Rao-Oestvall to include Araujo's "request deflector component" to allow the Rao-Oestvall-Araujo device to better "use the energy in a way that strikes a balance between providing functionality and maintaining longevity of the charge." SAMSUNG-1011, [0001];

SAMSUNG-1003, ¶195.

As discussed in §III.A.3, Rao-Oestvall provides functionality to control an application's network access by intercepting network packets, determining the packet prioritization based on the application, and selectively communicating packets to the network based on the packet prioritization. SAMSUNG-1003, ¶196. In Rao, these prioritization operations can be performed by one or more "network drivers of a network stack 310" (e.g., by "customiz[ing], modif[ying] or adapt[ing]" the network drivers "to provide a custom or modified portion of the network stack 310 in support of any of the techniques"). SAMSUNG-1005, [0100]. For example, the Rao-Oestvall device includes "[a] filter 322 [to] place, arrange, or coordinate network packets into queues 540 a-540 n in support of the priorities," and these "queues 540a-540n may be included in a network driver, such as an NDIS driver for the filter 322." *Id.*, [0143], [0180], [0191].

In implementing such functionality, a POSITA would have perceived opportunities for improving the interception capabilities already present in Rao to achieve additional advantages, such as increasing energy efficiency. SAMSUNG-1003, ¶197. A POSITA would have understood and found obvious that well-known monitoring capabilities may be useful to reduce power consumption and increase the longevity of techniques provided by the Rao-Oestvall device while it operates on battery power. *Id.* A POSITA would have therefore looked to Araujo for

a known monitoring technique, particularly Araujo's "request deflector component," which is "interposed" between each application and network driver, to selectively allow or block an application from transmitting data to the network. SAMSUNG-1011, [0050]; SAMSUNG-1003, ¶197. Incorporation of Araujo's "request deflector component" into Rao-Oestvall would have enabled assignment of a "status" to an application, use of that status to determine if allowing an application request "justifies the consumption of power under the circumstances that are present," and regulation (e.g., blocking, allowing) of the request based on that determination. SAMSUNG-1011, [0027]; SAMSUNG-1003, ¶197. Such a configuration would have enjoyed the benefits of better "use the energy in a way that strikes a balance between providing functionality and maintaining longevity of the charge." SAMSUNG-1011, [0001]; SAMSUNG-1003, ¶197.

In modifying Rao-Oestvall, a POSITA would have "interposed" Araujo's "request deflector component" between applications and the network driver implementing Rao's packet prioritization functionality (e.g., a network driver implementing the packet capture mechanism, filter, and queues). SAMSUNG-1003, ¶198. For example, a POSITA would have arranged the Araujo's "request deflector component" to process network packets after an application providing the network packets for transmission has otherwise been deemed by Oestvall's window

server component to be running in the foreground (with access to device resources). SAMSUNG-1006, [0025]; SAMSUNG-1003, ¶198. This configuration would have enabled further assessment of whether the application can access the network (e.g., in addition to considering whether an application has exceeded application-specific data limitations) in order to further enhance the efficiency of the Rao-Oestvall-Araujo combination. SAMSUNG-1003, ¶198.

Further, a POSITA would have configured the "request deflector component" to determine whether each of the applications has a "status [that] justifies the consumption of power under the circumstances that are present," and selectively allow or block the network packets from proceeding to the network driver based on the determination. SAMSUNG-1003, ¶199. For example, upon determining that the application's status justifies the consumption of power, the "request deflector component" would allow the network packets to proceed to the network driver for prioritization. *Id.* Alternatively, if the application's status does not justify the consumption of power, the "request deflector component" would block the network packets from reaching the network driver, permanently or temporarily. *Id*. The "request deflector component" would have thereby provided an additional layer of control for regulating each of the application's access to the network (e.g., to supplement the regulation techniques already present in Rao-Oestvall). *Id.*

A POSITA would have had a reasonable expectation of success in modifying Rao-Oestvall to incorporate Araujo. SAMSUNG-1003, ¶200. The combination would have involved (1) combining prior art elements according to known methods to yield predictable results; and (2) use of a known technique to improve similar devices (methods, or products) in the same way. *KSR,* 550 U.S. at 415-421.

3. Analysis

[12]

In the Rao-Oestvall-Araujo device (or "Rao-Oestvall-Araujo"), power management is based on monitoring, for example, power consumption ("***power state***"). SAMSUNG-1011, Abstract, [0004]. Rao-Oestvall-Araujo would have enabled changes to the way applications operate based on monitoring a power state, which a POSITA would have understood and found obvious involves adjusting a policy enforcement by Rao-Oestvall-Araujo for prioritization ("***dynamically change the application of the first differential traffic control policy***"). SAMSUNG-1011, [0031], [0046]; SAMSUNG-1003, ¶201. For example, "[a] power state change may be sought in order to turn on a device, or to raise the power state of a device, in order to allow the device to service a request from an application." SAMSUNG-1011, [0038]. In response, Rao-Oestvall-Araujo would respond by "block[ing] the request" and the "program may receive

an error code or result code." *Id.*, [0040]. One type of request is a network packet transmission request described in Rao; a POSITA would have understood and found obvious that blockage of the request would have resulted in Rao-Oestvall-Araujo selecting and/or applying a different policy for prioritization (e.g., selecting a policy that prioritizes packet transmissions of another application that would not necessitate a power state change). SAMSUNG-1005, [0182]; SAMSUNG-1003, ¶202.

[15]

As discussed for [12], a POSITA would have understood and found obvious that Rao-Oestvall-Araujo adjusts policy enforcement for prioritization in circumstances involving a power state change. Araujo explains that "power may be controlled for devices," such as "***network adapters***." SAMSUNG-1011, [0018]. A POSITA would have understood and found obvious that a modem is an example network adapter, and thus, Rao-Oestvall-Araujo would have provided power management for "***one or more modems***." SAMSUNG-1003, ¶203. A POSITA would have therefore understood and found obvious that Rao-Oestvall-Araujo adjusts a policy enforcement or prioritization based on a power state change for a modem ("***dynamically change the application of the first differential traffic control policy***"). SAMSUNG-1011, [0031], [0046]; SAMSUNG-1003, ¶204 (citing SAMSUNG-1009).

[21]

Rao-Oestvall-Araujo would have provided an improved agent that uses one or more APIs as a "means" or "mechanism" to provide communications relating to prioritization" for at least the same reasons as discussed for [1e]. SAMSUNG-1003, ¶205; SAMSUNG-1005, [0110], [0166], [0190], [0205]. Further, in Rao, communications related to prioritization are accomplished using any "form or interface known to those ordinarily skilled in the art." SAMSUNG-1005, [0190]. A POSITA would have found obvious that, in incorporating Araujo's "request deflector component" into Rao-Oestvall (§III.C.2), certain exemplary configurations involve the "request deflector component" being implemented to provide communications functionality as an API. SAMSUNG-1003, ¶205. In such configurations of Rao-Oestvall-Araujo, the "request deflector component" renders claim 21's "***API***" obvious because Rao-Oestvall-Araujo's "request deflector component" would have provided the functionality recited in the claim (e.g., emulating network messaging) as being performed by the API, further addressed below. *Id.*

Indeed, APIs configured to provide emulating network messaging functionality between applications and drivers were well-known by the Critical Date. SAMSUNG-1003, ¶206 (citing SAMSUNG-1015; SAMSUNG-1011; SAMSUNG-1016). Moreover, use of APIs to regulate network communications within a layered computing architecture was similarly well-known by the Critical Date.

SAMSUNG-1003, ¶206 (citing SAMSUNG-1017; SAMSUNG-1001, 91:30-36).

Further, in Rao-Oestvall-Araujo (§III.C.2), "if the power state change is not allowable under [a] policy," the device can "block the request" and "notif[y] [the program] that the request will not be processed." SAMSUNG-1011, [0038], [0040]. "The program may also be notified that the reason for the request is that the device is off," e.g., "the program may receive an error code or result code indicating that the request calls for a device that is not turned on." *Id.*; *see also*, [0017]. Thus, a POSITA would have understood and found obvious that Rao-Oestvall-Araujo would respond to an intercepted request by an application by notifying the application that the request will not be processed and/or transmitting an error code or result code to the application ("***respond[] to an intercepted request by the first end-user application by emulating network messaging***"). SAMSUNG-1003, ¶207. In doing so, the combined device would have provided the application more information regarding its attempt to access a network, as Araujo teaches. *Id.*

Moreover, Araujo's use of "error code or result code" aligns '701 Patent's "emulated network API" that blocks an application's connection attempt and sends "a message…back to the application" regarding the blocking, such as a message that "the application will understand and can interpret to indicate that the network access attempt was not allowed/blocked, that the network is not available, and/or to

try again later for the requested network access." SAMSUNG-1001, 91:25-49; SAMSUNG-1003, ¶208.

[22]

As discussed for [21], a POSITA would have configured Rao-Oestvall-Araujo to respond to an application's intercepted request by notifying the application that the request will not be processed and/or transmitting an error code or result code to the application ("***emulating network messaging***"). Rao-Oestvall-Araujo (§III.C.2) would have incorporated Araujo's "request deflector component" to "intercept[] requests and respond[] to the requests based on power management considerations before the requests reach a device driver." SAMSUNG-1011, [0024], [0050]; SAMSUNG-1003, ¶209.

A POSITA would have understood and found it obvious to configure Rao-Oestvall-Araujo such that, in blocking a request from reaching the network driver, the request is prevented from being provided to Rao's "network stack" (which includes "one or more network drivers supporting the one or more layers" of the network stack) ("***responding to a network request from the particular application by blocking the request from passing to a network stack***"). SAMSUNG-1005, [0100]; SAMSUNG-1003, ¶210.

In Rao-Oestvall-Araujo, "if the power state change is not allowable under the policy," the device can "block the request" and "notif[y] [the program] that the

request will not be processed." SAMSUNG-1011, [0038], [0041]. Further, "[t]he program may also be notified that the reason for the request is that the device is off" ("***...and returning to the particular application a message indicating the network request was not successful***"). *Id.*; *see also*, [0017]; SAMSUNG-1003, ¶211.

IV. PTAB DISCRETION SHOULD NOT PRECLUDE INSTITUTION

A. 35 U.S.C. §325(d)

Discretionary denial under the Board's §325(d) *Advanced Bionics* analysis is not warranted. IPR2019-01469, Paper 6, 8-9 (PTAB Feb. 13, 2020) (precedential) ("*Advanced Bionics"*).

None of the prior art references advanced in this Petition was previously before the Office. While a relative of Rao (WO2006/012610A2 ("Rao-2")) was cited on the face of the '701 Patent, there is no evidence that the Office substantively considered Rao-2 among the references listed on the first nine pages of the '701 Patent. *See, generally*, SAMSUNG-1002. Moreover, the same or substantially the same arguments previously were not presented to the Office. *Id.* Indeed, there could be no overlap between the arguments made before the Office because the Examiner issued no prior art rejections during prosecution.

To the extent it is argued that the same or substantially the same art or arguments were previously presented to the Office, the second prong is not met. *Advanced Bionics*, 8-10. The Examiner issued no prior art rejections and included no

substantive discussion of any prior art reference. *See, generally*, SAMSUNG-1002. Therefore, although Rao-2 was cited on the face of the '701 Patent, neither Rao/Rao-2 nor the obviousness of the Challenged Claims in view of those references was ever addressed during prosecution. As highlighted in Grounds 1A-1C, the Examiner did not appreciate Rao and how Rao in combination with other prior art not previously before the Office (Oestvall, Montemurro, Araujo) render the Challenged Claims obvious. Moreover, Petitioner has shown a reasonable likelihood that it would prevail that at least one of the Challenged Claims is unpatentable over the applied art based on the current record. *Supra* §III.A-C; PGR2022-00010, Paper 9, 8-9 (PTAB June 6, 2022). Therefore, Petitioner has demonstrated material error by the Office, and discretionary denial is not warranted.

B. 35 U.S.C. §314(a)

In *Apple Inc. v. Fintiv, Inc.*, the Board enumerated six factors to determine whether a petition should be discretionarily denied institution under §314(a). IPR2020-00019, Paper 11 at 2-3 (PTAB Mar. 20, 2020)(precedential)("*Fintiv*"). In June 2022, the USPTO issued updated discretionary denial guidance in view of the *Fintiv* factors, indicating that ***the PTAB will not discretionarily deny institution if Petitioner presents a Sotera stipulation.*** SAMSUNG-1031, 3, 7-8. Here, Samsung has eliminated any risk of duplicated effort by voluntarily presenting a *Sotera* stipulation to Headwater. SAMSUNG-1032; IPR2020-0109, Paper 12

(PTAB Dec. 1, 2020). For at least this reason, the Board should not discretionarily deny this petition.

Although the Board need not address additional *Fintiv* considerations in light of Samsung's *Sotera* stipulation, the *Fintiv* factors do not favor denial.

Factor 1 is neutral because neither party has requested a stay in co-pending litigation.

Factor 2 is neutral because the Court's trial date is speculative and subject to change. The Board will likely issue its Final Written Decision around February 2025, approximately six months after the scheduled trial date (8/5/2024). SAMSUNG-1030, 1. However, the Board and Director have recognized that "scheduled trial dates are unreliable and often change." SAMSUNG-1031, 8.

Factor 3 favors institution because Petitioner has diligently filed this Petition ahead of the one-year time bar, while the EDTX litigation is in its early stages. Beyond exchanging preliminary infringement/invalidity contentions, the parties and the District Court have yet to expend significant resources on invalidity. SAMSUNG-1030, 5.

Factor 4 favors institution because Petitioner has provided a *Sotera* stipulation. SAMSUNG-1032.

Factor 5: The parties in the parallel EDTX litigation are the same.

Factor 6 favors institution because the merits of this Petition are compelling.

V. CONCLUSION AND FEES

The Challenged Claims are unpatentable. Petitioner authorizes charge of fees to Deposit Account 06-1050.

VI. MANDATORY NOTICES UNDER 37 C.F.R § 42.8(a)(1)

A. Real Party-In-Interest Under 37 C.F.R. § 42.8(b)(1)

Samsung Electronics Co., Ltd. and Samsung Electronics America, Inc. (collectively, "Samsung") are the real parties-in-interest.

B. Related Matters Under 37 C.F.R. § 42.8(b)(2)

The '701 Patent is the subject of a civil action, *Headwater Research LLC v. Samsung Electronics Co., Ltd. et al.*, 2:22-cv-00422, E.D. Tex., filed October 26, 2022 (SAMSUNG-1004; SAMSUNG-1033). Samsung and Headwater are also involved in case nos. 2:22-cv-00467 and 2:23-cv-00103, also in E.D. Tex.

Samsung is not aware of any other disclaimers, reexamination certificates, or IPR petitions addressing the '701 Patent.

C. Lead And Back-Up Counsel Under 37 C.F.R. § 42.8(b)(3)

Petitioner provides the following designation of counsel.

Lead Counsel	Backup counsel
W. Karl Renner, Reg. No. 41,265 Fish & Richardson P.C. 60 South Sixth Street, Suite 3200 Minneapolis, MN 55402 Tel: 202-783-5070 Fax: 877-769-7945 Email:IPR39843-0155IP1@fr.com	Jeremy J. Monaldo, Reg. No. 58,680 Jennifer J. Huang, Reg. No. 64,297 Sangki Park, Reg. No. 77,261 60 South Sixth Street, Suite 3200 Minneapolis, MN 55402 Tel: 202-783-5070 Fax: 877-769-7945

	PTABInbound@fr.com

D. Service Information

Please address all correspondence and service to the address listed above. Petitioner consents to electronic service by email at IPR39843-0155IP1@fr.com (referencing No. 39843-0155IP1 and cc'ing PTABInbound@fr.com, axf-ptab@fr.com, jjm@fr.com, jjh@fr.com, and spark@fr.com).

Respectfully submitted,

Dated August 25, 2023

/Jennifer J. Huang/

W. Karl Renner, Reg. No. 41,265
Jeremy J. Monaldo, Reg. No. 58,680
Jennifer J. Huang, Reg. No. 64,297
Sangki Park, Reg. No. 77,261
Fish & Richardson P.C.
60 South Sixth Street, Suite 3200
Minneapolis, MN 55402
T: 202-783-5070
F: 877-769-7945

(Control No. IPR2023-01336)

Attorneys for Petitioner

CERTIFICATION UNDER 37 CFR § 42.24

Under the provisions of 37 CFR § 42.24(d), the undersigned hereby certifies that the word count for the foregoing Petition for *Inter Partes* Review totals 13,967 words, which is less than the 14,000 allowed under 37 CFR § 42.24.

Dated August 25, 2023

/Jennifer J. Huang/

W. Karl Renner, Reg. No. 41,265
Jeremy J. Monaldo, Reg. No. 58,680
Jennifer J. Huang, Reg. No. 64,297
Sangki Park, Reg. No. 77,261
Fish & Richardson P.C.
60 South Sixth Street, Suite 3200
Minneapolis, MN 55402
T: 202-783-5070
F: 877-769-7945

Attorneys for Petitioner

Headwater Ex. 2003
Samsung v. Headwater
IPR2023-01362

CERTIFICATE OF SERVICE

Pursuant to 37 CFR §§ 42.6(e)(4)(i) *et seq.* and 42.105(b), the undersigned certifies that on August 25, 2023, a complete and entire copy of this Petition for *Inter Partes* Review and all supporting exhibits were provided via Federal Express, to the Patent Owner, by serving the correspondence address of record as follows:

Headwater Research LLC
C/O Farjami & Farjami LLP
26522 La Alameda Ave., Suite 360
Mission Viejo, CA 92691

/Diana Bradley/

Diana Bradley
Fish & Richardson P.C.
60 South Sixth Street, Suite 3200
Minneapolis, MN 55402
(858) 678-5667