US008965168B2

(12) **United States Patent**
Cowen et al.

(10) **Patent No.: US 8,965,168 B2**
(45) **Date of Patent: Feb. 24, 2015**

(54) **FIBER MANAGEMENT DEVICES FOR FIBER OPTIC HOUSINGS, AND RELATED COMPONENTS AND METHODS**

(75) Inventors: **Andrew P. Cowen**, Keller, TX (US); **William J. Giraud**, Azle, TX (US); **Diana Rodriguez**, Fort Worth, TX (US)

(73) Assignee: **Corning Cable Systems LLC**, Hickory, NC (US)

(*) Notice: Subject to any disclaimer, the term of this patent is extended or adjusted under 35 U.S.C. 154(b) by 374 days.

(21) Appl. No.: **12/952,960**

(22) Filed: **Nov. 23, 2010**

(65) **Prior Publication Data**

US 2011/0268407 A1 Nov. 3, 2011

Related U.S. Application Data

(60) Provisional application No. 61/332,508, filed on May 7, 2010.

(51) **Int. Cl.**
G02B 6/00 (2006.01)
G02B 6/44 (2006.01)

(52) **U.S. Cl.**
CPC ***G02B 6/4452*** (2013.01)
USPC **385/135**

(58) **Field of Classification Search**
CPC G02B 6/4452
USPC 385/135
See application file for complete search history.

(56) **References Cited**

U.S. PATENT DOCUMENTS

620,013	A	2/1899	Barnes
2,528,910	A	11/1950	Poe
2,614,685	A	10/1952	Miller
3,081,717	A	3/1963	Yurevich
3,175,873	A	3/1965	Blomquist et al.
3,212,192	A	10/1965	Bachmann et al.
3,433,886	A	3/1969	Myers
3,494,306	A	2/1970	Aguilar
3,545,712	A	12/1970	Ellis

(Continued)

FOREIGN PATENT DOCUMENTS

AU	2010270959	A1	2/2012
CA	2029592	A1	5/1992

(Continued)

OTHER PUBLICATIONS

International Search Report for PCT/US2009/066779 mailed Aug. 27, 2010, 3 pages.

(Continued)

Primary Examiner — Omar Rojas

(57) **ABSTRACT**

Fiber management sections for fiber optic housings, and related components and methods are disclosed. In one embodiment, a fiber management device is provided. The fiber management device comprises a base and at least one fiber management component attached to the base and configured to manage one or more optical fibers. At least one opening is disposed in the base and configured to route one or more optical fibers from the base. The fiber management component may be a routing guide configured to route the one or more optical fibers as a non-limiting example. The fiber management device may be disposed on a side or within the fiber optic housing and may be removable from the enclosure and configured to route one or more optical fibers from the fiber optic housing.

28 Claims, 65 Drawing Sheets

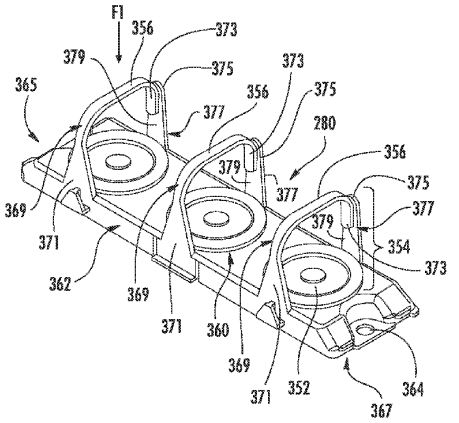

(56) **References Cited**

U.S. PATENT DOCUMENTS

3,568,263 A 3/1971 Meehan
3,646,244 A 2/1972 Cole
3,664,514 A 5/1972 Drake
3,683,238 A 8/1972 Olds et al.
3,701,835 A 10/1972 Eisele et al.
3,880,396 A 4/1975 Freiberger et al.
3,906,592 A 9/1975 Sakasegawa et al.
3,991,960 A 11/1976 Tanaka
4,047,797 A 9/1977 Arnold et al.
4,059,872 A 11/1977 Delesandri
4,119,285 A 10/1978 Bisping et al.
4,148,454 A 4/1979 Carlson et al.
4,239,316 A 12/1980 Spaulding
4,244,638 A 1/1981 Little et al.
4,285,486 A 8/1981 Von Osten et al.
4,303,296 A 12/1981 Spaulding
4,354,731 A 10/1982 Mouissie
4,457,482 A 7/1984 Kitagawa
4,525,012 A 6/1985 Dunner
4,540,222 A 9/1985 Burrell
4,561,615 A 12/1985 Medlin, Jr.
4,564,163 A 1/1986 Barnett
4,597,173 A 7/1986 Chino et al.
4,611,875 A 9/1986 Clarke et al.
4,635,886 A 1/1987 Santucci et al.
4,645,292 A 2/1987 Sammueller
4,657,340 A 4/1987 Tanaka et al.
4,681,288 A 7/1987 Nakamura
4,702,551 A 10/1987 Coulombe
4,711,518 A 12/1987 Shank et al.
4,736,100 A 4/1988 Vastagh
4,744,629 A 5/1988 Bertoglio et al.
4,747,020 A 5/1988 Brickley et al.
4,752,110 A 6/1988 Blanchet et al.
4,753,510 A 6/1988 Sezerman
4,787,706 A 11/1988 Cannon, Jr. et al.
4,792,203 A 12/1988 Nelson et al.
4,798,432 A 1/1989 Becker et al.
4,805,979 A 2/1989 Bossard et al.
4,808,774 A 2/1989 Crane
4,824,193 A 4/1989 Maeda et al.
4,824,196 A 4/1989 Bylander
4,826,277 A 5/1989 Weber et al.
4,838,643 A 6/1989 Hodges et al.
4,865,280 A 9/1989 Wollar
4,898,448 A 2/1990 Cooper
4,900,123 A 2/1990 Barlow
4,911,662 A 3/1990 Debortoli et al.
4,948,220 A 8/1990 Violo et al.
4,949,376 A 8/1990 Nieves et al.
4,971,421 A 11/1990 Ori
4,986,625 A 1/1991 Yamada et al.
4,988,831 A 1/1991 Wilson et al.
4,991,928 A 2/1991 Zimmer
4,995,688 A 2/1991 Anton et al.
5,001,602 A 3/1991 Suffi et al.
5,005,941 A 4/1991 Barlow et al.
5,017,211 A 5/1991 Wenger et al.
5,023,646 A 6/1991 Ishida et al.
5,024,498 A 6/1991 Becker et al.
5,028,114 A 7/1991 Krausse et al.
5,037,175 A 8/1991 Weber
5,048,918 A 9/1991 Daems et al.
5,060,897 A 10/1991 Thalenfeld
5,066,149 A 11/1991 Wheeler et al.
5,067,784 A 11/1991 Debortoli et al.
5,071,211 A 12/1991 Debortoli et al.
5,071,220 A 12/1991 Ruello et al.
5,073,042 A 12/1991 Mulholland et al.
5,074,635 A 12/1991 Justice et al.
5,076,688 A 12/1991 Bowen et al.
5,080,459 A 1/1992 Wettengel et al.
5,100,221 A 3/1992 Carney et al.
5,104,336 A 4/1992 Hatanaka et al.
5,125,060 A 6/1992 Edmundson
5,127,082 A 6/1992 Below et al.
5,127,851 A 7/1992 Hilbert et al.
5,129,030 A 7/1992 Petrunia
5,129,607 A 7/1992 Satoh
5,138,678 A 8/1992 Briggs et al.
D330,368 S 10/1992 Bourgeois et al.
5,170,452 A 12/1992 Ott
5,189,723 A 2/1993 Johnson et al.
5,230,492 A 7/1993 Zwart et al.
5,274,729 A 12/1993 King et al.
5,278,933 A 1/1994 Hunsinger et al.
5,291,570 A 3/1994 Filgas et al.
5,315,679 A 5/1994 Baldwin et al.
5,329,520 A 7/1994 Richardson
5,363,467 A 11/1994 Keith
5,366,388 A 11/1994 Freeman et al.
5,390,272 A 2/1995 Repta et al.
5,398,820 A 3/1995 Kiss
RE34,955 E 5/1995 Anton et al.
5,418,874 A 5/1995 Carlisle et al.
5,444,804 A 8/1995 Yui et al.
5,511,798 A 4/1996 Kawamoto et al.
5,535,970 A 7/1996 Gobbi
5,538,213 A 7/1996 Brown
5,546,495 A 8/1996 Bruckner et al.
5,563,971 A 10/1996 Abendschein
5,596,670 A 1/1997 Debortoli et al.
5,608,606 A 3/1997 Blaney
5,668,910 A 9/1997 Arnett
5,668,911 A 9/1997 Debortoli
5,689,607 A 11/1997 Vincent et al.
5,692,079 A 11/1997 Iso
5,704,573 A 1/1998 de Beers et al.
5,754,724 A 5/1998 Peterson et al.
5,765,698 A * 6/1998 Bullivant 211/26
5,788,087 A 8/1998 Orlando
5,790,741 A 8/1998 Vincent et al.
5,806,687 A 9/1998 Ballesteros et al.
5,828,807 A 10/1998 Tucker et al.
5,874,733 A 2/1999 Silver et al.
5,880,864 A 3/1999 Williams et al.
5,906,342 A 5/1999 Kraus
5,909,298 A 6/1999 Shimada et al.
5,913,006 A 6/1999 Summach
5,933,557 A 8/1999 Ott
5,940,563 A 8/1999 Kobayashi et al.
5,943,460 A 8/1999 Mead et al.
5,949,946 A 9/1999 Debortoli et al.
5,953,962 A 9/1999 Hewson
5,956,439 A 9/1999 Pimpinella
5,956,449 A 9/1999 Otani et al.
5,987,203 A 11/1999 Abel et al.
5,995,700 A 11/1999 Burek et al.
6,027,352 A 2/2000 Byrne
6,041,042 A 3/2000 Bussiere
6,049,963 A 4/2000 Boe
6,088,497 A 7/2000 Phillips et al.
6,118,075 A 9/2000 Baker et al.
6,130,983 A 10/2000 Cheng
6,141,222 A 10/2000 Toor et al.
6,170,784 B1 1/2001 MacDonald et al.
6,172,782 B1 1/2001 Kobayashi
6,181,861 B1 1/2001 Wenski et al.
6,200,170 B1 3/2001 Amberg et al.
6,201,919 B1 3/2001 Puetz et al.
6,212,324 B1 4/2001 Lin et al.
6,216,987 B1 4/2001 Fukuo
6,229,948 B1 5/2001 Blee et al.
6,247,851 B1 6/2001 Ichihara
6,250,816 B1 6/2001 Johnston et al.
6,259,850 B1 7/2001 Crosby, Jr. et al.
6,273,532 B1 8/2001 Chen et al.
6,278,831 B1 8/2001 Henderson et al.
D448,005 S 9/2001 Klein, Jr. et al.
6,289,618 B1 9/2001 Kump et al.
6,305,848 B1 10/2001 Gregory
6,318,824 B1 11/2001 LaGrotta et al.
6,324,575 B1 11/2001 Jain et al.
6,325,549 B1 12/2001 Shevchuk

(56) **References Cited**

U.S. PATENT DOCUMENTS

6,327,059 B1 12/2001 Bhalla et al.
RE37,489 E 1/2002 Anton et al.
6,344,615 B1 2/2002 Nolf et al.
6,353,696 B1 3/2002 Gordon et al.
6,357,712 B1 3/2002 Lu
6,363,198 B1 3/2002 Braga et al.
6,371,419 B1 4/2002 Ohnuki
6,375,129 B2 4/2002 Koziol
6,377,218 B1 4/2002 Nelson et al.
6,379,052 B1 4/2002 De Jong et al.
6,381,642 B1 4/2002 O'Donnell et al.
6,385,374 B2 5/2002 Kropp
6,398,149 B1 6/2002 Hines et al.
6,406,314 B1 6/2002 Byrne
6,410,850 B1 6/2002 Abel et al.
6,412,986 B1 7/2002 Ngo et al.
6,419,519 B1 7/2002 Young
6,469,905 B1 10/2002 Hwang
D466,087 S 11/2002 Cuny et al.
6,478,472 B1 11/2002 Anderson et al.
6,494,550 B1 12/2002 Chen et al.
6,510,274 B1 1/2003 Wu et al.
6,535,397 B2 3/2003 Clark et al.
6,544,075 B1 4/2003 Liao
6,550,977 B2 4/2003 Hizuka
6,568,542 B1 5/2003 Chen
6,584,267 B1 6/2003 Caveney et al.
6,585,423 B1 7/2003 Vergeest
6,587,630 B2 7/2003 Spence et al.
6,591,053 B2 7/2003 Fritz
6,592,266 B1 7/2003 Hankins et al.
6,600,106 B2 7/2003 Standish et al.
6,601,997 B2 8/2003 Ngo
6,612,874 B1 9/2003 Stout et al.
6,622,873 B2 9/2003 Hegrenes et al.
6,624,389 B1 9/2003 Cox
6,640,042 B2 10/2003 Araki et al.
RE38,311 E 11/2003 Wheeler
6,644,863 B1 11/2003 Azami et al.
6,669,149 B2 12/2003 Akizuki
6,679,604 B1 1/2004 Bove et al.
6,687,450 B1 2/2004 Kempeneers et al.
6,693,552 B1 2/2004 Herzig et al.
6,695,620 B1 2/2004 Huang
6,701,056 B2 3/2004 Burek et al.
6,721,482 B1 4/2004 Glynn
6,746,037 B1 6/2004 Kaplenski et al.
6,773,297 B2 8/2004 Komiya
6,786,647 B1 9/2004 Hinds et al.
6,786,743 B2 9/2004 Huang
6,786,896 B1 9/2004 Madhani et al.
6,810,194 B2 10/2004 Griffiths et al.
6,813,412 B2 11/2004 Lin
6,816,660 B2 11/2004 Nashimoto
6,818,834 B1 11/2004 Lin
6,822,874 B1 11/2004 Marler
6,826,346 B2 11/2004 Sloan et al.
6,826,631 B2 11/2004 Webb
6,830,489 B2 12/2004 Aoyama
6,847,614 B2 1/2005 Banker et al.
6,848,862 B1 2/2005 Schlig
6,856,505 B1 2/2005 Venegas et al.
6,863,444 B2 3/2005 Anderson et al.
6,923,406 B2 8/2005 Akizuki
6,934,456 B2 8/2005 Ferris et al.
6,935,598 B2 8/2005 Sono et al.
6,945,701 B2 9/2005 Trezza et al.
6,952,530 B2 10/2005 Helvajian et al.
6,963,690 B1 11/2005 Kassal et al.
7,000,784 B2 2/2006 Canty et al.
7,005,582 B2 2/2006 Muller et al.
7,025,275 B2 4/2006 Huang et al.
7,027,706 B2 4/2006 Diaz et al.
7,038,137 B2 5/2006 Grubish et al.
7,048,447 B1 5/2006 Patel et al.
7,077,710 B2 7/2006 Haggay et al.
7,094,095 B1 8/2006 Caveney
7,097,047 B2 8/2006 Lee et al.
7,116,491 B1 10/2006 Willey et al.
7,127,143 B2 10/2006 Elkins, II et al.
7,136,555 B2 11/2006 Theuerkorn et al.
7,139,462 B1 11/2006 Richtman
7,140,903 B2 11/2006 Pulizzi et al.
7,147,383 B2 12/2006 Sullivan
7,170,466 B2 1/2007 Janoschka
7,171,121 B1 1/2007 Skarica et al.
7,181,142 B1 2/2007 Xu et al.
7,186,134 B2 3/2007 Togami et al.
7,193,783 B2 3/2007 Willey et al.
7,200,316 B2 * 4/2007 Giraud et al. 385/135
7,201,595 B1 4/2007 Morello
7,217,040 B2 5/2007 Crews et al.
7,218,526 B2 5/2007 Mayer
7,220,065 B2 5/2007 Han et al.
7,221,832 B2 5/2007 Tinucci
7,228,047 B1 6/2007 Szilagyi et al.
7,234,878 B2 6/2007 Yamauchi et al.
7,239,789 B2 7/2007 Grubish et al.
7,284,785 B2 10/2007 Gotou et al.
7,289,731 B2 10/2007 Thinguldstad
7,300,216 B2 11/2007 Morse et al.
7,310,471 B2 12/2007 Bayazit et al.
7,310,472 B2 12/2007 Haberman
7,330,624 B2 2/2008 Isenhour et al.
7,330,625 B2 2/2008 Barth
7,331,718 B2 2/2008 Yazaki et al.
7,352,946 B2 4/2008 Heller et al.
7,352,947 B2 4/2008 Phung et al.
7,404,736 B2 7/2008 Herbst et al.
7,414,198 B2 8/2008 Stansbie et al.
7,417,188 B2 8/2008 McNutt et al.
7,428,363 B2 9/2008 Leon et al.
7,435,090 B1 10/2008 Schriefer et al.
7,462,779 B2 12/2008 Caveney et al.
7,469,090 B2 12/2008 Ferris et al.
7,471,867 B2 12/2008 Vogel et al.
7,499,622 B2 * 3/2009 Castonguay et al. 385/135
7,507,111 B2 3/2009 Togami et al.
7,510,421 B2 3/2009 Fransen et al.
7,523,898 B1 4/2009 Barry et al.
7,540,666 B2 6/2009 Luther et al.
7,544,085 B2 6/2009 Baldwin et al.
7,552,899 B2 6/2009 Chen et al.
7,596,293 B2 9/2009 Isenhour et al.
7,603,020 B1 10/2009 Wakileh et al.
7,609,967 B2 10/2009 Hochbaum et al.
7,614,903 B1 11/2009 Huang
7,620,272 B2 11/2009 Hino et al.
7,641,398 B2 1/2010 O'Riorden et al.
7,668,433 B2 2/2010 Bayazit et al.
7,689,079 B2 3/2010 Burnham et al.
7,694,926 B2 4/2010 Allen et al.
7,706,294 B2 4/2010 Natarajan et al.
7,715,125 B2 5/2010 Willey
7,715,683 B2 * 5/2010 Kowalczyk et al. 385/135
7,751,674 B2 7/2010 Hill
7,751,675 B2 7/2010 Holmberg et al.
7,756,371 B1 7/2010 Burnham et al.
7,760,984 B2 7/2010 Solheid et al.
7,764,858 B2 7/2010 Bayazit et al.
7,764,859 B2 7/2010 Krampotich et al.
7,769,266 B2 8/2010 Morris
7,805,044 B2 9/2010 Reagan et al.
7,809,232 B2 10/2010 Reagan et al.
7,809,235 B2 10/2010 Reagan et al.
7,811,136 B1 10/2010 Hsieh et al.
7,822,310 B2 10/2010 Castonguay et al.
7,837,495 B2 11/2010 Baldwin et al.
7,850,372 B2 12/2010 Nishimura et al.
7,856,166 B2 12/2010 Biribuze et al.
7,862,369 B2 1/2011 Gimenes et al.
7,869,685 B2 1/2011 Hendrickson et al.
7,876,580 B2 1/2011 Mayer
7,899,298 B2 3/2011 Cox et al.

(56) **References Cited**

U.S. PATENT DOCUMENTS

7,914,332	B2	3/2011	Song et al.
7,942,589	B2	5/2011	Yazaki et al.
7,945,136	B2	5/2011	Cooke et al.
7,945,138	B2	5/2011	Hill et al.
7,970,250	B2	6/2011	Morris
7,991,252	B2	8/2011	Cheng et al.
8,009,959	B2	8/2011	Barnes et al.
8,014,171	B2	9/2011	Kelly et al.
8,014,646	B2	9/2011	Keith et al.
8,020,813	B1	9/2011	Clark et al.
8,059,932	B2	11/2011	Hill et al.
8,093,499	B2	1/2012	Hoffer et al.
8,131,126	B2	3/2012	Kowalczyk et al.
8,184,938	B2	5/2012	Cooke et al.
8,206,043	B2	6/2012	Thirugnanam et al.
8,206,058	B2	6/2012	Vrondran et al.
8,220,881	B2	7/2012	Keith
8,226,305	B2	7/2012	Thirugnanam et al.
8,249,410	B2	8/2012	Andrus et al.
8,251,591	B2	8/2012	Barnes et al.
8,270,798	B2	9/2012	Dagley et al.
8,280,216	B2	10/2012	Cooke et al.
8,285,104	B2	10/2012	Davis et al.
8,301,004	B2	10/2012	Cooke et al.
8,331,752	B2	12/2012	Biribuze
8,353,494	B2	1/2013	Peng et al.
8,369,679	B2	2/2013	Wakileh et al.
8,391,666	B2	3/2013	Hetzer et al.
8,491,331	B2	7/2013	Follingstad
8,528,872	B2	9/2013	Mattlin et al.
8,537,477	B2	9/2013	Shioda
8,538,226	B2	9/2013	Makrides-Saravanos et al.
8,559,783	B2	10/2013	Campos et al.
2001/0010741	A1	8/2001	Hizuka
2002/0014571	A1	2/2002	Thompson
2002/0037139	A1	3/2002	Asao et al.
2002/0131730	A1	9/2002	Keeble et al.
2002/0136519	A1	9/2002	Tinucci et al.
2002/0180163	A1	12/2002	Muller et al.
2002/0181918	A1	12/2002	Spence et al.
2002/0194596	A1	12/2002	Srivastava
2003/0002802	A1	1/2003	Trezza et al.
2003/0011855	A1	1/2003	Fujiwara
2003/0021539	A1	1/2003	Kwon et al.
2003/0036748	A1	2/2003	Cooper et al.
2003/0051026	A1	3/2003	Carter et al.
2003/0086675	A1	5/2003	Wu et al.
2003/0095753	A1	5/2003	Wada et al.
2003/0156552	A1	8/2003	Banker et al.
2003/0180004	A1	9/2003	Cox et al.
2003/0180012	A1	9/2003	Deane et al.
2003/0183413	A1	10/2003	Kato
2003/0210882	A1	11/2003	Barthel et al.
2003/0235387	A1	12/2003	Dufour
2004/0001717	A1	1/2004	Bennett et al.
2004/0013390	A1	1/2004	Kim et al.
2004/0022494	A1	2/2004	Liddle et al.
2004/0024934	A1	2/2004	Webb
2004/0151465	A1	8/2004	Krampotich et al.
2004/0196841	A1	10/2004	Tudor et al.
2004/0208459	A1	10/2004	Mizue et al.
2004/0240827	A1	12/2004	Daoud et al.
2004/0240882	A1	12/2004	Lipski et al.
2005/0026497	A1	2/2005	Holliday
2005/0067358	A1	3/2005	Lee et al.
2005/0069248	A1	3/2005	Jasti et al.
2005/0074990	A1	4/2005	Shearman et al.
2005/0111810	A1	5/2005	Giraud et al.
2005/0175293	A1	8/2005	Byers et al.
2005/0178573	A1	8/2005	James
2005/0254757	A1*	11/2005	Ferretti et al. 385/88
2005/0281526	A1	12/2005	Vongseng et al.
2005/0281527	A1	12/2005	Wilson et al.
2005/0285493	A1	12/2005	Hu et al.
2006/0007562	A1	1/2006	Willey et al.
2006/0034048	A1	2/2006	Xu
2006/0044774	A1	3/2006	Vasavda et al.
2006/0103270	A1	5/2006	Bergesch et al.
2006/0110118	A1	5/2006	Escoto et al.
2006/0127026	A1	6/2006	Beck
2006/0133736	A1	6/2006	Sullivan
2006/0147172	A1	7/2006	Luther et al.
2006/0160377	A1	7/2006	Huang
2006/0165365	A1	7/2006	Feustel et al.
2006/0191700	A1	8/2006	Herzog et al.
2006/0204179	A1	9/2006	Patel et al.
2006/0225912	A1	10/2006	Clark et al.
2006/0228087	A1	10/2006	Bayazit et al.
2006/0269194	A1	11/2006	Luther et al.
2006/0269206	A1	11/2006	Zimmel
2006/0275008	A1	12/2006	Xin
2006/0285812	A1	12/2006	Ferris et al.
2007/0025070	A1	2/2007	Jiang et al.
2007/0033629	A1	2/2007	McGranahan et al.
2007/0047894	A1	3/2007	Holmberg et al.
2007/0058641	A1	3/2007	Cicchetti et al.
2007/0086723	A1	4/2007	Sasaki et al.
2007/0104447	A1	5/2007	Allen
2007/0110373	A1	5/2007	Dudek et al.
2007/0127201	A1	6/2007	Mertesdorf et al.
2007/0131628	A1	6/2007	Mimlitch, III et al.
2007/0183732	A1	8/2007	Wittmeier et al.
2007/0189692	A1	8/2007	Zimmel et al.
2007/0196071	A1	8/2007	Laursen et al.
2007/0221793	A1	9/2007	Kusuda et al.
2007/0237484	A1	10/2007	Reagan et al.
2007/0257159	A1	11/2007	Nelson et al.
2007/0266192	A1	11/2007	Campini et al.
2007/0274718	A1	11/2007	Bridges et al.
2008/0011514	A1	1/2008	Zheng et al.
2008/0025683	A1	1/2008	Murano
2008/0031585	A1	2/2008	Solheid et al.
2008/0063350	A1	3/2008	Trebesch et al.
2008/0068788	A1	3/2008	Ozawa et al.
2008/0069511	A1	3/2008	Blackwell, Jr. et al.
2008/0069512	A1	3/2008	Barnes et al.
2008/0078899	A1	4/2008	Chen et al.
2008/0080826	A1	4/2008	Leon et al.
2008/0080827	A1	4/2008	Leon et al.
2008/0080828	A1	4/2008	Leon et al.
2008/0085094	A1	4/2008	Krampotich
2008/0089656	A1	4/2008	Wagner et al.
2008/0095502	A1	4/2008	McColloch
2008/0095541	A1	4/2008	Dallesasse
2008/0100440	A1	5/2008	Downie et al.
2008/0106871	A1	5/2008	James
2008/0112681	A1	5/2008	Battey et al.
2008/0118207	A1	5/2008	Yamamoto et al.
2008/0121423	A1	5/2008	Vogel et al.
2008/0124039	A1	5/2008	Gniadek et al.
2008/0131068	A1	6/2008	Mertesdorf et al.
2008/0145013	A1	6/2008	Escoto et al.
2008/0152294	A1	6/2008	Hirano et al.
2008/0166094	A1	7/2008	Bookbinder et al.
2008/0166131	A1	7/2008	Hudgins et al.
2008/0175541	A1	7/2008	Lu et al.
2008/0175550	A1	7/2008	Coburn et al.
2008/0175551	A1	7/2008	Smrha et al.
2008/0175552	A1	7/2008	Smrha et al.
2008/0193091	A1	8/2008	Herbst
2008/0205823	A1	8/2008	Luther et al.
2008/0205843	A1	8/2008	Castonguay et al.
2008/0205844	A1	8/2008	Castonguay et al.
2008/0212928	A1	9/2008	Kowalczyk et al.
2008/0219632	A1	9/2008	Smith et al.
2008/0219634	A1	9/2008	Rapp et al.
2008/0236858	A1	10/2008	Quijano
2008/0247723	A1	10/2008	Herzog et al.
2008/0267573	A1	10/2008	Douglas et al.
2008/0285934	A1	11/2008	Standish et al.
2008/0292261	A1	11/2008	Kowalczyk et al.
2008/0296060	A1	12/2008	Hawley et al.
2008/0298763	A1	12/2008	Appenzeller et al.
2008/0304803	A1	12/2008	Krampotich et al.

(56) **References Cited**

U.S. PATENT DOCUMENTS

2008/0310810	A1	12/2008	Gallagher
2009/0010607	A1	1/2009	Elisson et al.
2009/0016685	A1	1/2009	Hudgins et al.
2009/0022470	A1	1/2009	Krampotich
2009/0038845	A1	2/2009	Fransen et al.
2009/0060439	A1	3/2009	Cox et al.
2009/0060440	A1	3/2009	Wright et al.
2009/0067800	A1	3/2009	Vazquez et al.
2009/0074371	A1	3/2009	Bayazit et al.
2009/0097813	A1	4/2009	Hill
2009/0110347	A1	4/2009	Jacobsson
2009/0121092	A1	5/2009	Keith
2009/0136194	A1	5/2009	Barnes
2009/0136195	A1	5/2009	Smrha et al.
2009/0136196	A1	5/2009	Trebesch et al.
2009/0146342	A1	6/2009	Haney et al.
2009/0148117	A1	6/2009	Laurisch
2009/0166404	A1	7/2009	German et al.
2009/0169163	A1	7/2009	Abbott, III et al.
2009/0175588	A1	7/2009	Brandt et al.
2009/0180749	A1	7/2009	Douglas et al.
2009/0184221	A1	7/2009	Sculler
2009/0185782	A1	7/2009	Parikh et al.
2009/0191891	A1	7/2009	Ma et al.
2009/0194647	A1	8/2009	Keith
2009/0196563	A1	8/2009	Mullsteff et al.
2009/0202214	A1	8/2009	Holmberg et al.
2009/0207577	A1	8/2009	Fransen et al.
2009/0208178	A1	8/2009	Kowalczyk et al.
2009/0208210	A1	8/2009	Trojer et al.
2009/0212679	A1	8/2009	Frousiakis et al.
2009/0214171	A1	8/2009	Coburn et al.
2009/0220200	A1	9/2009	Sheau Tung Wong et al.
2009/0220204	A1	9/2009	Ruiz
2009/0226142	A1	9/2009	Barnes et al.
2009/0238531	A1	9/2009	Holmberg et al.
2009/0245743	A1	10/2009	Cote et al.
2009/0252472	A1	10/2009	Solheid et al.
2009/0257726	A1	10/2009	Redmann et al.
2009/0257727	A1	10/2009	Laurisch et al.
2009/0257754	A1	10/2009	Theodoras, II et al.
2009/0263096	A1	10/2009	Solheid et al.
2009/0263122	A1	10/2009	Helkey et al.
2009/0267865	A1	10/2009	Miller et al.
2009/0269016	A1	10/2009	Korampally et al.
2009/0269018	A1	10/2009	Frohlich et al.
2009/0269019	A1	10/2009	Andrus et al.
2009/0274429	A1	11/2009	Krampotich et al.
2009/0274430	A1	11/2009	Krampotich et al.
2009/0274432	A1	11/2009	Iwaya
2009/0290842	A1	11/2009	Bran de Leon et al.
2009/0290843	A1	11/2009	Reagan et al.
2009/0297111	A1	12/2009	Reagan et al.
2009/0304342	A1	12/2009	Adomeit et al.
2009/0324189	A1	12/2009	Hill et al.
2010/0003000	A1	1/2010	Rapp et al.
2010/0012671	A1	1/2010	Vrondran et al.
2010/0027953	A1	2/2010	Russell
2010/0054681	A1	3/2010	Biribuze et al.
2010/0054682	A1	3/2010	Cooke et al.
2010/0054683	A1	3/2010	Cooke et al.
2010/0054684	A1	3/2010	Cooke et al.
2010/0054685	A1	3/2010	Cooke et al.
2010/0054686	A1	3/2010	Cooke et al.
2010/0061691	A1	3/2010	Murano et al.
2010/0061693	A1	3/2010	Bran de Leon et al.
2010/0074587	A1	3/2010	Loeffelholz et al.
2010/0080517	A1	4/2010	Cline et al.
2010/0086274	A1	4/2010	Keith
2010/0111483	A1	5/2010	Reinhardt et al.
2010/0119201	A1	5/2010	Smrha et al.
2010/0129035	A1	5/2010	Teo
2010/0142544	A1	6/2010	Chapel et al.
2010/0142910	A1	6/2010	Hill et al.
2010/0150518	A1	6/2010	Leon et al.
2010/0158467	A1	6/2010	Hou et al.
2010/0166377	A1	7/2010	Nair et al.
2010/0178022	A1	7/2010	Schroeder et al.
2010/0202740	A1	8/2010	Barlowe et al.
2010/0202745	A1	8/2010	Sokolowski et al.
2010/0202748	A1	8/2010	Pierce et al.
2010/0220967	A1	9/2010	Cooke et al.
2010/0220968	A1	9/2010	Dagley et al.
2010/0247051	A1	9/2010	Kowalczyk et al.
2010/0266245	A1	10/2010	Sabo
2010/0278499	A1	11/2010	Mures et al.
2010/0296790	A1	11/2010	Cooke et al.
2010/0296791	A1	11/2010	Makrides-Saravanos et al.
2010/0310225	A1	12/2010	Anderson et al.
2010/0310226	A1	12/2010	Wakileh et al.
2010/0316334	A1	12/2010	Kewitsch
2010/0322554	A1	12/2010	Barnes et al.
2010/0322579	A1	12/2010	Cooke et al.
2010/0322580	A1	12/2010	Beamon et al.
2010/0322581	A1	12/2010	Cooke et al.
2010/0322582	A1	12/2010	Cooke et al.
2010/0322583	A1	12/2010	Cooke et al.
2011/0008004	A1	1/2011	Liao et al.
2011/0073730	A1	3/2011	Kitchen
2011/0085774	A1	4/2011	Murphy et al.
2011/0085776	A1	4/2011	Biribuze et al.
2011/0097053	A1	4/2011	Smith et al.
2011/0097977	A1	4/2011	Bubnick et al.
2011/0129185	A1	6/2011	Lewallen et al.
2011/0129186	A1	6/2011	Lewallen et al.
2011/0186532	A1	8/2011	Wu
2011/0192631	A1	8/2011	Burek et al.
2011/0217014	A1	9/2011	Dominique
2011/0217016	A1	9/2011	Mullsteff
2011/0222821	A1	9/2011	Pitwon et al.
2011/0249950	A1	10/2011	Chapa Ramirez et al.
2011/0268405	A1	11/2011	Cote et al.
2011/0268407	A1	11/2011	Cowen et al.
2011/0268408	A1	11/2011	Giraud et al.
2011/0268413	A1	11/2011	Cote et al.
2011/0280537	A1	11/2011	Cowen et al.
2012/0025683	A1	2/2012	Mattlin et al.
2012/0051707	A1	3/2012	Barnes et al.
2012/0057838	A1	3/2012	Hill et al.
2012/0106899	A1	5/2012	Choi
2012/0183263	A1	7/2012	Wu
2012/0183289	A1	7/2012	Lou et al.
2012/0219263	A1	8/2012	Beamon et al.
2012/0288244	A1	11/2012	Wu et al.
2012/0288248	A1	11/2012	Chapa Ramirez et al.
2012/0301083	A1	11/2012	Carter et al.
2013/0004136	A1	1/2013	Brower et al.
2013/0058616	A1	3/2013	Cote et al.
2013/0077927	A1	3/2013	O'Connor
2013/0214108	A1	8/2013	Irudayaraj et al.
2013/0266282	A1	10/2013	Cote et al.
2013/0308916	A1	11/2013	Buff et al.
2014/0003782	A1	1/2014	Blackwell, Jr. et al.
2014/0010510	A1	1/2014	Blackard
2014/0112628	A1	4/2014	Keenum et al.

FOREIGN PATENT DOCUMENTS

CA	2186314	A1	4/1997
CA	2765835	A1	1/2011
CH	688705	A5	1/1998
CN	102460258	A	5/2012
DE	8711970	U1	10/1987
DE	3726718	A1	2/1989
DE	3726719	A1	2/1989
DE	4030301	A1	3/1992
DE	4231181	C1	8/1993
DE	20115940	U1	1/2002
DE	10338848	A1	3/2005
DE	202005009932	U1	11/2005
DE	202007000556	U1	10/2007
DE	102007024476	A1	11/2008
DE	202010009385		9/2010
EP	29512	A1	6/1981

(56) **References Cited**

FOREIGN PATENT DOCUMENTS

EP	0250900	A2	1/1988	
EP	0408266	A2	1/1991	
EP	0474091	A1	8/1991	
EP	0468671	A1	1/1992	
EP	0490698	A1	6/1992	
EP	0529830	A1	3/1993	
EP	0544004	A1	6/1993	
EP	0547778	A1	6/1993	
EP	0581527	A1	2/1994	
EP	0693699	A1	1/1996	
EP	0720322	A2	7/1996	
EP	0776557	B1	6/1997	
EP	0940700	A2	9/1999	
EP	0949522	A2	10/1999	
EP	1041417	A2	10/2000	
EP	1056177	A1	11/2000	
EP	1065542	A1	1/2001	
EP	1162485	A2	12/2001	
EP	1203974	A2	5/2002	
EP	1289319	A2	3/2003	
EP	1310816	A2	5/2003	
EP	1316829	A2	6/2003	
EP	1367308	A1	12/2003	
EP	1777563	A1	4/2007	
EP	2060942	A2	5/2009	
EP	2159613	A2	3/2010	
FR	1586331	A	2/1970	
FR	2123728	A5	9/1972	
FR	2378378	A1	8/1978	
GB	2241591	A	9/1991	
GB	2277812	A	11/1994	
GB	2377839	A	1/2003	
JP	3060994	A	3/1991	
JP	3281378	A	12/1991	
JP	5045541	A	2/1993	
JP	06018749	A	1/1994	
JP	07308011	A	* 11/1995	..... H02G 3/08
JP	7318761	A	12/1995	
JP	8007308	A	1/1996	
JP	8248235	A	9/1996	
JP	8248237	A	9/1996	
JP	8254620	A	10/1996	
JP	9258033	A	10/1997	
JP	9258055	A	10/1997	
JP	10227919	A	8/1998	
JP	10332945	A	12/1998	
JP	10339817	A	12/1998	
JP	11023858	A	1/1999	
JP	2000098138	A	4/2000	
JP	2000098139	A	4/2000	
JP	2001004849	A	1/2001	
JP	2001133636	A	5/2001	
JP	2001154030	A	6/2001	
JP	2001159714	A	6/2001	
JP	2002022974	A	1/2002	
JP	2002077236	A	3/2002	
JP	2002116337	A	4/2002	
JP	2002169035	A	6/2002	
JP	2002305389	A	10/2002	
JP	2003029054	A	1/2003	
JP	2003169026	A	6/2003	
JP	2003215353	A	7/2003	
JP	2003344701	A	12/2003	
JP	2004144808	A	5/2004	
JP	2004246147	A	9/2004	
JP	2005257937	A	9/2005	
JP	2006292924	A	10/2006	
JP	2008271017	A	11/2008	
JP	2009229506	A	10/2009	
JP	2012065019	A	3/2012	
KR	20110037404	A	4/2011	
WO	9636896	A1	11/1996	
WO	9638752	A1	12/1996	
WO	9722025	A1	6/1997	
WO	9736197	A1	10/1997	
WO	9744605	A1	11/1997	
WO	0130007	A2	4/2001	
WO	0180596	A1	10/2001	
WO	03009527	A2	1/2003	
WO	03014943	A2	2/2003	
WO	2005020400	A1	3/2005	
WO	2006076062	A	7/2006	
WO	2006108024	A1	10/2006	
WO	2007089682	A2	8/2007	
WO	2008027201	A2	3/2008	
WO	2008063054	A2	5/2008	
WO	2009026688	A1	3/2009	
WO	2009029485	A1	3/2009	
WO	2009030360	A1	3/2009	
WO	2010024847	A2	3/2010	
WO	2011005461	A1	1/2011	

OTHER PUBLICATIONS

"MPOFiber Optic Rack Panels now available from L-com Connectivity Products," article dated Jun. 4, 2007, 16 pages, http://www.I-com.com/content/Article.aspx?Type=P&ID=438.

"19" Rack Panel with 16 MPO Fiber Optic Couplers—1U high," product page, accessed Oct. 23, 2012, 2 pages, http://www.I-com.com/item.aspx?id=9767#.UlbgG8XXay5.

"Drawing for L-com 1U Panel with 16 MTP couplers," May 15, 2007, 1 page, http://www.I-com.com/multimedia/eng_drawings/PR17516MTP.pdf.

"RapidNet Fibre MTP VHD Cassette," Brochure, Date Unknown, 1 page, http://www.hellermanntyton.se/documents/5000/576_fiber_1U.pdf.

"MPO for Gigabit Ethernet/FAS-NET MTP Solution," Brochure, Date Unknown, 11 pages, http://www.infinique.com/upload/13182286190.pdf.

"Hubbell OptiChannel High Density 144 Port 1U Fiber Enclosure," Brochure, Date Unknown, 2 pages, http://www.hubbell-premise.com/literature/PLDF010.pdf.

Non-final Office Action for U.S. Appl. No. 12/771,473 mailed Oct. 4, 2012, 6 pages.

Non-final Office Action for U.S. Appl. No. 12/819,034 mailed May 11, 2012, 7 pages.

Notice of Allowance of for U.S. Appl. No. 12/819,034 mailed Sep. 11, 2012, 7 pages.

Notice of Allowance for U.S. Appl. No. 12/417,325 mailed Aug. 22, 2012, 7 pages.

Notice of Panel Decision for Pre-Appeal Brief for U.S. Appl. No. 12/417,325 mailed Aug. 8, 2012, 2 pages.

Advisory Action for U.S. Appl. No. 12/417,325 mailed Jun. 29, 2012, 3 pages.

Advisory Action for U.S. Appl. No. 12/417,325 mailed Jun. 12, 2012, 3 pages.

Final Office Action for U.S. Appl. No. 12/417,325 mailed Apr. 16, 2012, 6 pages.

Final Office Action for U.S. Appl. No. 12/417,325 mailed Feb. 7, 2012, 7 pages.

Non-final Office Action for U.S. Appl. No. 12/417,325 mailed Jun. 15, 2011, 6 pages.

Notice of Allowance for U.S. Appl. No. 12/487,929 mailed Sep. 12, 2012, 4 pages.

Notice of Allowance for U.S. Appl. No. 12/487,929 mailed Jun. 13, 2012, 8 pages.

Advisory Action for U.S. Appl. No. 12/487,929 mailed Apr. 17, 2012, 3 pages.

Final Office Action for U.S. Appl. No. 12/487,929 mailed Feb. 14, 2012, 6 pages.

Final Office Action for U.S. Appl. No. 12/487,929 mailed Dec. 5, 2011, 7 pages.

Non-final Office Action for U.S. Appl. No. 12/487,929 mailed May 23, 2011, 7 pages.

Notice of Allowance for U.S. Appl. No. 12/415,253 mailed Mar. 11, 2011, 7 pages.

Non-final Office Action for U.S. Appl. No. 12/415,253 mailed Jul. 12, 2010, 11 pages.

(56) **References Cited**

OTHER PUBLICATIONS

Final Office Action for U.S. Appl. No. 12/415,253 mailed Apr. 16, 2010, 9 pages.
Non-final Office Action for U.S. Appl. No. 12/415,253 mailed Sep. 30, 2009, 8 pages.
Non-final Office Action for U.S. Appl. No. 12/641,617 mailed Oct. 5, 2012, 21 pages.
Final Office Action for U.S. Appl. No. 12/630,938 mailed Jun. 1, 2012, 18 pages.
Non-final Office Action for U.S. Appl. No. 12/630,938 mailed Dec. 19, 2011, 15 pages.
Non-final Office Action for U.S. Appl. No. 12/751,884 mailed Jul. 2, 2012, 9 pages.
Non-final Office Action for U.S. Appl. No. 12/871,052 mailed Aug. 13, 2012, 8 pages.
Annex to Form PCT/ISA/2006, Communication Relating to the Results of the Partial International Search, for PCT/US2009/004549 mailed Feb. 10, 2010, 2 pages.
Annex to Form PCT/ISA/206, Communication Relating to the Results of the Partial International Search, for PCT/US2009/004548 mailed Jan. 19, 2010, 2 pages.
Corning Cable Systems, "Corning Cable Systems Products for BellSouth High Density Shelves," Jun. 2000, 2 pages.
Corning Cable Systems, "Corning Cable Systems Quick Reference Guide for Verizon FTTP FDH Products," Jun. 2005, 4 pages.
Conner, M. "Passive Optical Design for RFOG and Beyond," Braodband Properties, Apr. 2009, pp. 78-81.
Corning Evolant, "Eclipse Hardware Family," Nov. 2009, 1 page.
Corning Evolant, "Enhanced Management Frame," Dec. 2009, 1 page.
Corning Evolant, "Enhanced Management Frame (EMF)," Specification Sheet, Nov. 2009, 24 pages.
Corning Cable Systems, "Evolant Solutions for Evolving Networks: Fiber Optic Hardware," Oct. 2002, 2 pages.
Corning Cable Systems, "Fiber Optic Hardware with Factory-Installed Pigtails: Features and Benefits," Nov. 2010, 12 pages.
Corning Cable Systems, "FiberManager System 1- and 3-Position Compact Shelves," Jan. 2003, 4 pages.
Corning Cable Systems, "FiberManager System Frame and Components," Jan. 2003, 12 pages.
Corning Cable Systems, "High Density Frame," Jul. 2001, 2 pages.
Corning Cable Systems, "High Density Frame (HDF) Connector-Splice Shelves and Housings," May 2003, 4 pages.
International Search Report for PCT/US10/35529 mailed Jul. 23, 2010, 2 pages.
International Search Report for PCT/US10/35563 mailed Jul. 23, 2012, 1 page.
International Search Report for PCT/US2008/002514 mailed Aug. 8, 2008, 2 pages.
International Search Report for PCT/US2008/010317 mailed Mar. 4, 2008, 2 pages.
International Search Report for PCT/US2009/001692 mailed Nov. 24, 2009, 5 pages.
International Search Report for PCT/US2010/024888 mailed Jun. 23, 2010, 5 pages.
International Search Report for PCT/US2010/027402 mailed Jun. 16, 2010, 2 pages.
Corning Cable Systems, "MTX Frames and Accessories," Feb. 2006, 4 pages.
Panduit, "Lock-in LC Duplex Clip," Accessed Mar. 22, 2012, 1 page.
International Search Report for PCT/US06/49351 mailed Apr. 25, 2008, 1 page.
International Search Report for PCT/US09/57069 mailed Mar. 24, 2010, 2 pages.
International Search Report for PCT/US2009/057244 mailed Nov. 9, 2009 3 pages.
International Search Report for PCTUS2009004548 mailed Mar. 19, 2010, 5 pages.
International Search Report for PCTUS2009004549 mailed Apr. 20, 2010, 6 pages.
Siecor, "Single Shelf HDF with Slack Storage and Heat Shield (HH1-CSH-1238-1V-BS)," Jan. 1998, 12 pages.
Corning Cable Systems, "Mass Termination Xchange (MTX) Frame System Equipment Office Planning and Application Guide," SRP003-664, Issue 1, Mar. 2005, 57 pages.
Corning Cable Systems, "Mass Termination Xchange (MTX) Equipment Patch Cord Interbay Vertical Channel," SRP003-684, Issue 1, Mar. 2005, 8 pages.
Corning Cable Systems, "High Density Frame (HDF) Installation," SRP003-355, Issue 4, Sep. 2002, 18 pages.
Written Opinion for PCT/US2010/023901 mailed Aug. 25, 2011, 8 pages.
Advisory Action for U.S. Appl. No. 12/221,117 mailed Aug. 24, 2011, 3 pages.
Appeal Brief for U.S. Appl. No. 12/221,117 mailed Mar. 29, 2012, 16 pages.
Final Office Action for U.S. Appl. No. 12/221,117 mailed Feb. 19, 2010, 7 pages.
Final Office Action for U.S. Appl. No. 12/221,117 mailed Jun. 10, 2011, 8 pages.
Non-final Office Action for U.S. Appl. No. 12/221,117 mailed Jul. 14, 2010, 7 pages.
Non-final Office Action for U.S. Appl. No. 12/221,117 mailed Jun. 9, 2009, 5 pages.
Non-final Office Action for U.S. Appl. No. 12/221,117 mailed Dec. 21, 2010, 7 pages.
Advisory Action for U.S. Appl. No. 12/394,483 mailed Feb. 16, 2012, 3 pages.
Final Office Action for U.S. Appl. No. 12/394,483 mailed Dec. 6, 2011, 14 pages.
Non-final Office Action for U.S. Appl. No. 12/394,483 mailed Jun. 17, 2011, 11 pages.
Advisory Action for U.S. Appl. No. 12/950,234 mailed Dec. 21, 2011, 3 pages.
Non-final Office Action for U.S. Appl. No. 12/950,234 mailed Jun. 17, 2011, 7 pages.
Non-final Office Action for U.S. Appl. No. 12/950,234 mailed Mar. 12, 2012, 10 pages.
Final Office Action for U.S. Appl. No. 12/950,234 mailed Oct. 14, 2011, 10 pages.
Advisory Action mailed May 12, 2011, for U.S. Appl. No. 12/323,423, 3 pages.
Final Rejection mailed Mar. 3, 2011, for U.S. Appl. No. 12/323,423, 17 pages.
Non-Final Rejection mailed Aug. 5, 2011, for U.S. Appl. No. 12/323,423, 13 pages.
Non-Final Office Action for U.S. Appl. No. 12/953,039 mailed Jan. 11, 2013, 6 pages.
Non-Final Office Action for U.S. Appl. No. 12/952,912 mailed Dec. 28, 2012, 9 pages.
Non-Final Office Action for U.S. Appl. No. 12/953,118 mailed Jan. 7, 2013, 9 pages.
Non-Final Office Action for U.S. Appl. No. 12/707,889 mailed Jan. 2, 2013, 7 pages.
Non-Final Office Action for U.S. Appl. No. 12/953,536 mailed Jan. 2, 2013, 20 pages.
Non-final Office Action for U.S. Appl. No. 12/956,475 mailed Oct. 4, 2012, 7 pages.
Non-final Office Action for U.S. Appl. No. 13/302,067 mailed Jun. 7, 2013, 13 pages.
Final Office Action for U.S. Appl. No. 12/771,473 mailed Jul. 19, 2013, 7 pages.
Notice of Allowance for U.S. Appl. No. 12/751,884 mailed Jul. 17, 2013, 8 pages.
Non-final Office Action for U.S. Appl. No. 12/940,585 mailed Aug. 16, 2013, 14 pages.
Final Office Action for U.S. Appl. No. 12/953,134 mailed Aug. 23, 2013, 11 pages.
Ex parte Quayle Action for U.S. Appl. No. 12/953,164 mailed Aug. 16, 2013, 5 pages.
Non-final Office Action for U.S. Appl. No. 12/732,487 mailed Jul. 17, 2013, 22 pages.

(56) **References Cited**

OTHER PUBLICATIONS

Non-final Office Action and Interview Summary for U.S. Appl. No. 12/707,889 mailed Aug. 8, 2013, 15 pages.
Advisory Action for U.S. Appl. No. 12/953,039 mailed Jul. 12, 2013, 3 pages.
Advisory Action for U.S. Appl. No. 12/953,118 mailed Jul. 12, 2013, 3 pages.
Advisory Action for U.S. Appl. No. 12/641,617 mailed Jul. 29, 2013, 3 pages.
Final Office Action for U.S. Appl. No. 12/394,114 mailed Oct. 25, 2012, 8 pages.
Non-final Office Action for U.S. Appl. No. 12/732,487 mailed Sep. 19, 2012, 22 pages.
Non-final Office Action for U.S. Appl. No. 12/818,986 mailed Feb. 3, 2012, 12 pages.
Final Office Action for U.S. Appl. No. 12/818,986 mailed Oct. 18, 2012, 13 pages.
Non-final Office Action for U.S. Appl. No. 12/915,682 mailed Oct. 24, 2012, 8 pages.
Non-final Office Action for U.S. Appl. No. 12/953,134 mailed Sep. 25, 2012, 8 pages.
Non-final Office Action for U.S. Appl. No. 12/946,139 mailed Jul. 26, 2012, 12 pages.
Examination Report for European patent application 09789090.9-2216 mailed Aug. 29, 2011, 4 pages.
Examination Report for European patent application 09789090.9-2216 mailed Mar. 30, 2012, 6 pages.
Written Opinion of the International Searching Authority for International patent application PCT/US2009004548, mailed Apr. 5, 2011, 6 pages.
European Search Report for European patent application 09789090.9-2217 mailed Jan. 24, 2013, 5 pages.
Notice of Allowance for U.S. Appl. No. 13/090,621 mailed Apr. 22, 2013, 8 pages.
Final Office Action for U.S. Appl. No. 12/953,039 mailed May 1, 2013, 8 pages.
Final Office Action for U.S. Appl. No. 12/953,118 mailed May 3, 2013, 11 pages.
Final Office Action for U.S. Appl. No. 12/915,682 mailed Apr. 18, 2013, 9 pages.
Notice of Allowance for U.S. Appl. No. 12/732,487 mailed Mar. 19, 2013, 11 pages.
Non-final Office Action for U.S. Appl. No. 12/953,134 mailed Mar. 21, 2013, 9 pages.
Non-final Office Action for U.S. Appl. No. 12/953,536 mailed Jun. 6, 2013, 21 pages.
Non-final Office Action for U.S. Appl. No. 11/820,300 mailed Apr. 25, 2012, 10 pages.
Final Office Action for U.S. Appl. No. 12/871,052 mailed Jul. 1, 2013, 12 pages.
Non-final Office Action for U.S. Appl. No. 12/940,699 mailed Jun. 26, 2013, 9 pages.
Notice of Allowance for U.S. Appl. No. 13/090,621 mailed Jun. 25, 2013, 8 pages.
Final Office Action for U.S. Appl. No. 12/946,139 mailed Feb. 15, 2013, 17 pages.
Non-final Office Action for U.S. Appl. No. 12/751,884 mailed Feb. 15, 2013, 5 pages.
Non-final Office Action for U.S. Appl. No. 12/394,114 mailed Feb. 27, 2013, 8 pages.
Non-final Office Action for U.S. Appl. No. 12/819,065 mailed Mar. 4, 2013, 7 pages.
Final Office Action for U.S. Appl. No. 12/641,617 mailed May 10, 2013, 21 pages.
European Search Report for patent application 10790017.7 mailed Nov. 8, 2012, 7 pages.
Final Office Action for U.S. Appl. No. 12/952,912 mailed Aug. 30, 2013, 15 pages.
Advisory Action for U.S. Appl. No. 12/771,473 mailed Oct. 2, 2013, 3 pages.
Notice of Allowance for U.S. Appl. No. 12/641,617 mailed Sep. 4, 2013, 9 pages.
Notice of Allowance for U.S. Appl. No. 12/871,052 mailed Sep. 18, 2013, 9 pages.
Non-final Office Action for U.S. Appl. No. 12/953,039 mailed Sep. 12, 2013, 8 pages.
Non-final Office Action for U.S. Appl. No. 12/946,139 mailed Oct. 2, 2013, 18 pages.
Final Office Action for U.S. Appl. No. 12/394,114 mailed Oct. 4, 2013, 10 pages.
Non-final Office Action for U.S. Appl. No. 12/818,986 mailed Oct. 4, 2013, 19 pages.
Advisory Action for U.S. Appl. No. 12/953,134 mailed Nov. 4, 2013, 3 pages.
Notice of Allowance for U.S. Appl. No. 13/292,130 mailed Oct. 18, 2013, 9 pages.
Non-final Office Action for U.S. Appl. No. 13/901,074 mailed Oct. 9, 2013, 6 pages.
Non-final Office Action for U.S. Appl. No. 12/956,446 mailed Sep. 6, 2013, 10 pages.
Notice of Allowance for U.S. Appl. No. 13/292,130 mailed Feb. 14, 2014, 7 pages.
Final Office Action for U.S. Appl. No. 12/707,889 mailed Feb. 11, 2014, 17 pages.
Non-final Office Action for U.S. Appl. No. 12/940,699 mailed Feb. 3, 2014, 10 pages.
Notice of Allowance and Applicant-Initiated Interview Summary for U.S. Appl. No. 12/771,473 mailed Feb. 27, 2014, 8 pages.
Advisory Action for U.S. Appl. No. 12/394,114 mailed Jan. 2, 2014, 3 pages.
Final Office Action for U.S. Appl. No. 12/953,039 mailed Dec. 27, 2013, 10 pages.
Notice of Allowance for U.S. Appl. No. 12/871,052 mailed Dec. 24, 2013, 9 pages.
Advisory Action for U.S. Appl. No. 12/952,912 mailed Nov. 26, 2013, 3 pages.
Examiner's Answer to the Appeal Brief for U.S. Appl. No. 12/953,118 mailed Dec. 3, 2013, 6 pages.
Non-final Office Action for U.S. Appl. No. 13/597,549 mailed Jan. 14, 2014, 9 pages.
Final Office Action for U.S. Appl. No. 12/732,487 mailed Dec. 6, 2013, 24 pages.
Final Office Action for U.S. Appl. No. 12/956,446 mailed Dec. 23, 2013, 12 pages.
Non-final Office Action for U.S. Appl. No. 12/953,536 mailed Dec. 17, 2013, 21 pages.
Non-final Office Action for U.S. Appl. No. 12/819,065 mailed Dec. 3, 2013, 8 pages.
Author Unknown, "144 Fiber Patch Panel 1U," Technical Data, ADTEK Group Limited, 2009, 2 pages.
Non-final Office Action for U.S. Appl. No. 13/663,975 mailed Jan. 31, 2014, 18 pages.
Non-final Office Action for U.S. Appl. No. 12/394,114 mailed Mar. 21, 2014, 9 pages.
Final Office Action for U.S. Appl. No. 12/940,585 mailed Mar. 18, 2014, 15 pages.
Non-final Office Action for U.S. Appl. No. 12/953,101 mailed Apr. 3, 2014, 9 pages.
Advisory Action for U.S. Appl. No. 12/953,039 mailed Mar. 6, 2014, 3 pages.
Advisory Action for U.S. Appl. No. 12/956,446 mailed Mar. 20, 2014, 3 pages.
Final Office Action for U.S. Appl. No. 13/603,894 mailed Mar. 20, 2014, 15 pages.
Final Office Action for U.S. Appl. No. 12/947,883 mailed Mar. 31, 2014, 13 pages.
International Search Report for PCT/US2011/030446 mailed Jul. 14, 2011, 2 pages.
International Search Report for PCT/US2011/030448 mailed Jul. 20, 2011, 2 pages.
International Search Report for PCT/US2011/030466 mailed Aug. 5, 2011, 2 pages.

(56) **References Cited**

OTHER PUBLICATIONS

International Search Report for PCT/US2012/023622 mailed Mar. 9, 2012, 4 pages.
International Search Report for PCT/US2012/023626 mailed May 22, 2012, 4 pages.
International Search Report for PCT/US2012/023635 mailed Sep. 14, 2012, 3 pages.
International Search Report for PCT/US2012/052958 mailed Mar. 1, 2013, 7 pages.
International Preliminary Report on Patentability for PCT/US2012/052958 mailed Mar. 13, 2014, 12 pages.
International Search Report for PCT/US2013/041266 mailed Aug. 20, 2013, 4 pages.
International Search Report for PCT/US2013/041268 mailed Aug. 20, 2013, 5 pages.
Non-final Office Action for U.S. Appl. No. 13/081,856 mailed Nov. 26, 2013, 11 pages.
Notice of Allowance for U.S. Appl. No. 13/951,916 mailed Dec. 16, 2013, 12 pages.
Non-final Office Action for U.S. Appl. No. 12/947,883 mailed Sep. 6, 2013, 9 pages.
Non-final Office Action for U.S. Appl. No. 13/621,958 mailed Feb. 13, 2014, 10 pages.
Non-final Office Action for U.S. Appl. No. 13/649,417 mailed Feb. 13, 2014, 10 pages.
Non-final Office Action for U.S. Appl. No. 13/663,949 mailed Feb. 3, 2014, 19 pages.
Non-final Office Action for U.S. Appl. No. 12/953,003 mailed Apr. 14, 2014, 13 pages.
Non-final Office Action for U.S. Appl. No. 12/953,039 mailed Apr. 15, 2014, 8 pages.
Final Office Action for U.S. Appl. No. 12/946,139 mailed Apr. 22, 2014, 18 pages.
Final Office Action forU.S. Appl. No. 13/597,549 mailed Apr. 24, 2014, 10 pages.
Final Office Action for U.S. Appl. No. 13/901,074 mailed May 9, 2014, 7 pages.
Non-final Office Action for U.S. Appl. No. 12/946,217 mailed Jul. 26, 2012, 25 pages.
Final Office Action for U.S. Appl. No. 12/946,217 mailed Mar. 18, 2013, 48 pages.
Non-final Office Action for U.S. Appl. No. 12/946,217 mailed Oct. 3, 2013, 47 pages.
Final Office Action for U.S. Appl. No. 12/946,217 mailed Apr. 25, 2014, 40 pages.
Non-final Office Action for U.S. Appl. No. 13/833,876 mailed Apr. 24, 2014, 7 pages.
Notice of Allowance for U.S. Appl. No. 12/953,536 mailed May 20, 2014, 9 pages.
Advisory Action for U.S. Appl. No. 12/707,889 mailed Jun. 11, 2014, 4 pages.
Advisory Action for U.S. Appl. No. 12/940,585 mailed Jun. 17, 2014, 3 pages.
Advisory Action for U.S. Appl. No. 12/947,883 mailed Jun. 19, 2014, 3 pages.
Non-final Office Action for U.S. Appl. No. 12/732,487 mailed Jun. 20, 2014, 24 pages.
Non-final Office Action for U.S. Appl. No. 13/621,958 mailed Jun. 20, 2014, 13 pages.
Final Office Action for U.S. Appl. No. 13/649,417 mailed Jun. 25, 2014, 9 pages.
Non-final Office Action for U.S. Appl. No. 13/746,938 mailed Jul. 11, 2014, 9 pages.
Non-final Office Action for U.S. Appl. No. 12/751,895 mailed May 20, 2014, 9 pages.
Notice of Allowance for U.S. Appl. No. 13/533,093 mailed Jul. 8, 2014, 9 pages.
Notice of Allowance for U.S. Appl. No. 13/597,549 mailed Jul. 8, 2014, 8 pages.
Notice of Allowance for U.S. Appl. No. 13/455,646 mailed Jun. 2, 2014, 9 pages.
Non-final Office Action for U.S. Appl. No. 12/819,065 mailed Jul. 18, 2014, 10 pages.
Final Office Action for U.S. Appl. No. 12/818,986 mailed Jul. 18, 2014, 27 pages.
Final Office Action for U.S. Appl. No. 13/081,856 mailed Jul. 2, 2014, 8 pages.
Notice of Allowance for U.S. Appl. No. 12/221,117 mailed Jul. 16, 2014, 7 pages.
Decision on Appeal for U.S. Appl. No. 12/221,117 mailed Jul. 1, 2014, 7 pages.
Final Office Action for U.S. Appl. No. 12/953,039 mailed Jul. 25, 2014, 10 pages.
Advisory Action for U.S. Appl. No. 12/953,039 mailed Oct. 3, 2014, 3 pages.
Notice of Allowance for U.S. Appl. No. 121953,536 mailed Aug. 28, 2014, 9 pages.
Final Office Action for U.S. Appl. No. 13/901,074 mailed Sep. 5, 2014, 7 pages.
Final Office Action for U.S. Appl. No. 13/663,975 mailed Aug. 14, 2014, 42 pages.
Corrected Notice of Allowance for U.S. Appl. No. 13/533,093 mailed Sep. 2, 2014, 7 pages.
Notice of Allowance for U.S. Appl. No. 131649,417 mailed Sep. 8, 2014, 7 pages.
Examiner's Answer to the Appeal for U.S. Appl. No. 12/952,912 mailed Sep. 11, 2014, 15 pages.
Advisory Action and Examiner-Initiated Interview Summary for U.S. Appl. No. 13/081,856 mailed Sep. 16, 2014, 4 pages.
Notice of Allowance for U.S. Appl. No. 13/455,646 mailed Sep. 26, 2014, 9 pages.
Non-Final Office Action for U.S. Appl. No. 13/663,949 mailed Sep. 25, 2014, 21 pages.
Non-Final Office Action for U.S. Appl. No. 13/688,675 mailed Sep. 30, 2014, 9 pages.
Notice of Allowance for U.S. Appl. No. 13/597,549 mailed Oct. 3, 2014, 8 pages.
Decision on Appeal for U.S. Appl. No. 11/320,062 mailed Aug. 14, 2014, 8 pages.
Final Office Action for U.S. Appl. No. 12/953,101 mailed Oct. 20, 2014, 14 pages.
Notice of Allowance for U.S. Appl. No. 13/533,093 mailed Oct. 17, 2014, 9 pages.
Notice of Allowance for U.S. Appl. No. 12/732,487 mailed Oct. 7, 2014, 8 pages.
Non-Final Office Action for U.S. Appl. No. 13/567,288 mailed Oct. 8, 2014, 7 pages.
Advisory Action for U.S. Appl. No. 12/818,986 mailed Oct. 15, 2014, 5 pages.
Examiner's Answer to the Appeal Brief for U.S. Appl. No. 121953,134 mailed Aug. 1, 2014, 7 pages.

* cited by examiner

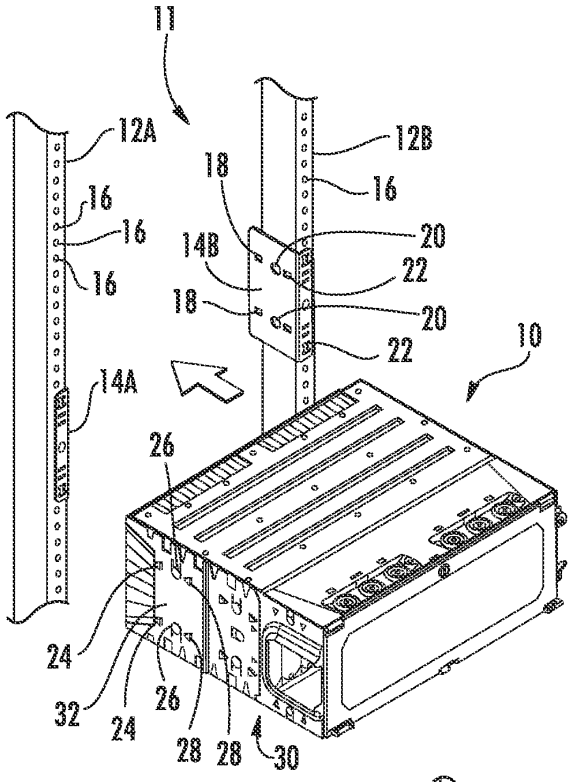
11
12A
12B
16
16
16
16
18
18
14B
20
22
20
22
10
14A
26
24
32
24
26
28
28
30

FIG. 1A

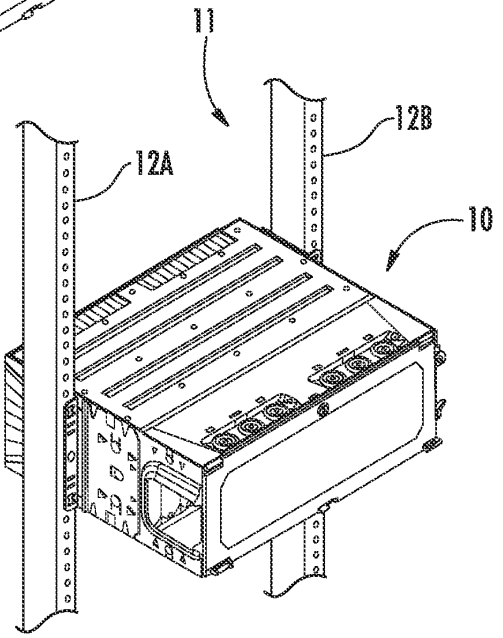
11
12A
12B
10

FIG. 1B

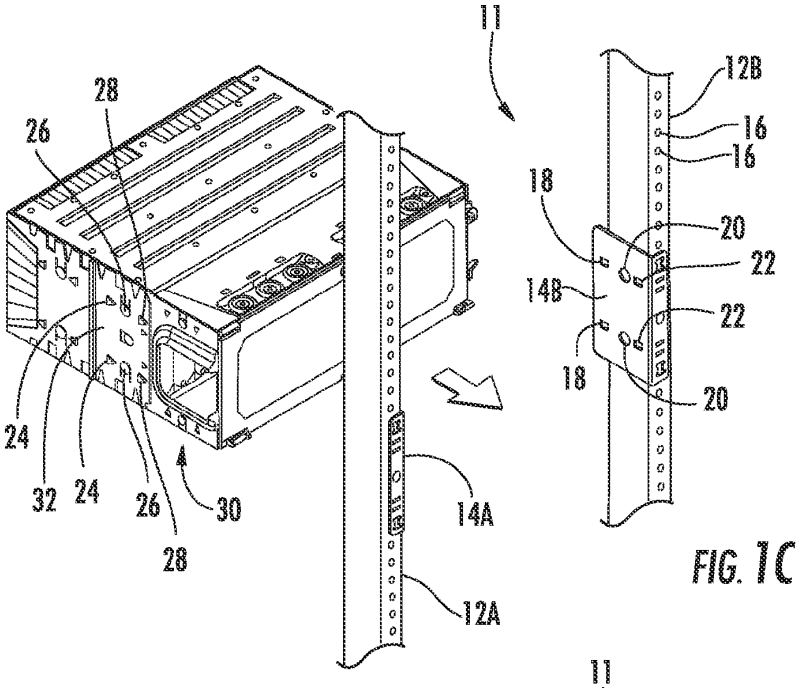
11
12B
16
16
18
20
22
14B
22
18
20
28
26
24
32
24
26
28
30
14A
12A

FIG. 1C

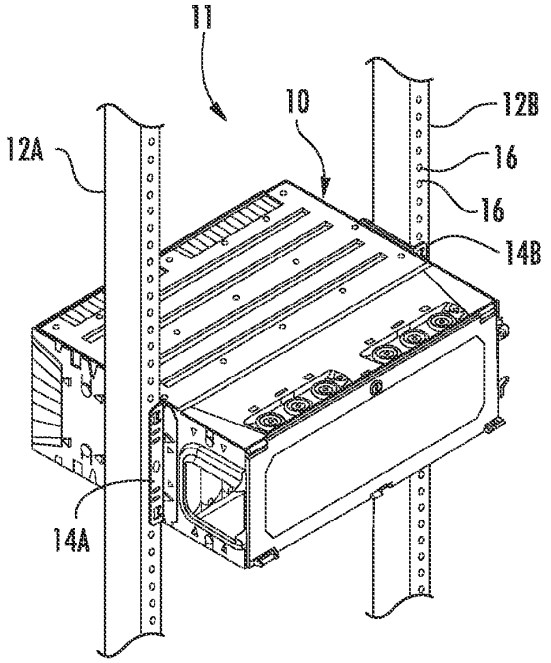
11
10
12B
12A
16
16
14B
14A

FIG. 1D

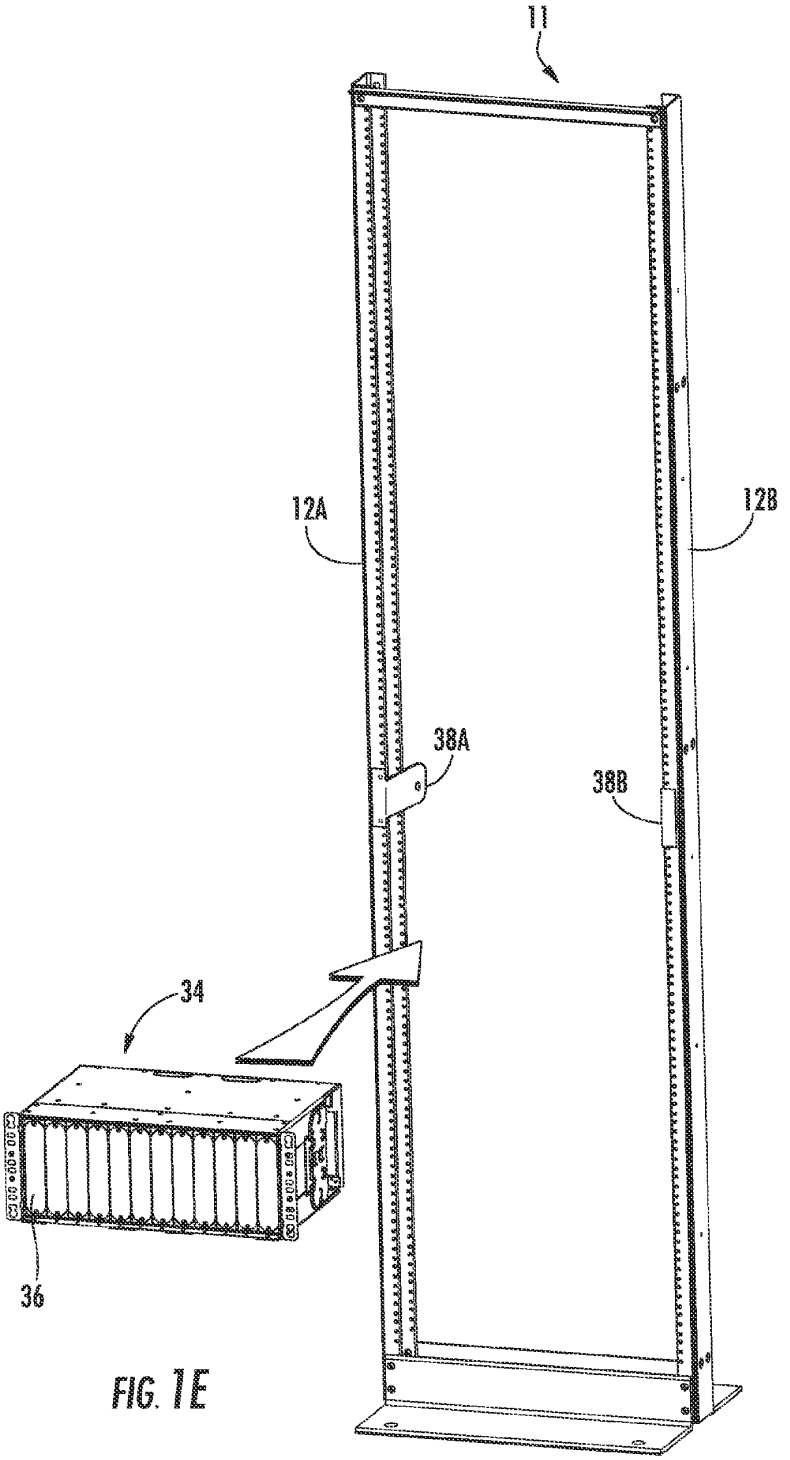

FIG. 1E

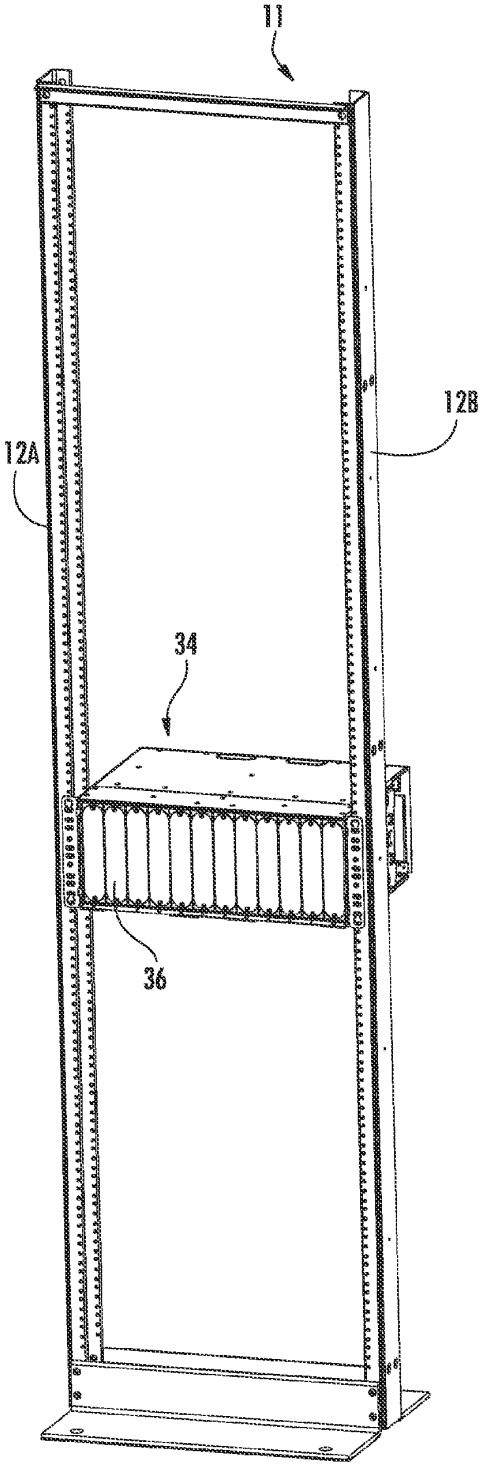

FIG. 1F

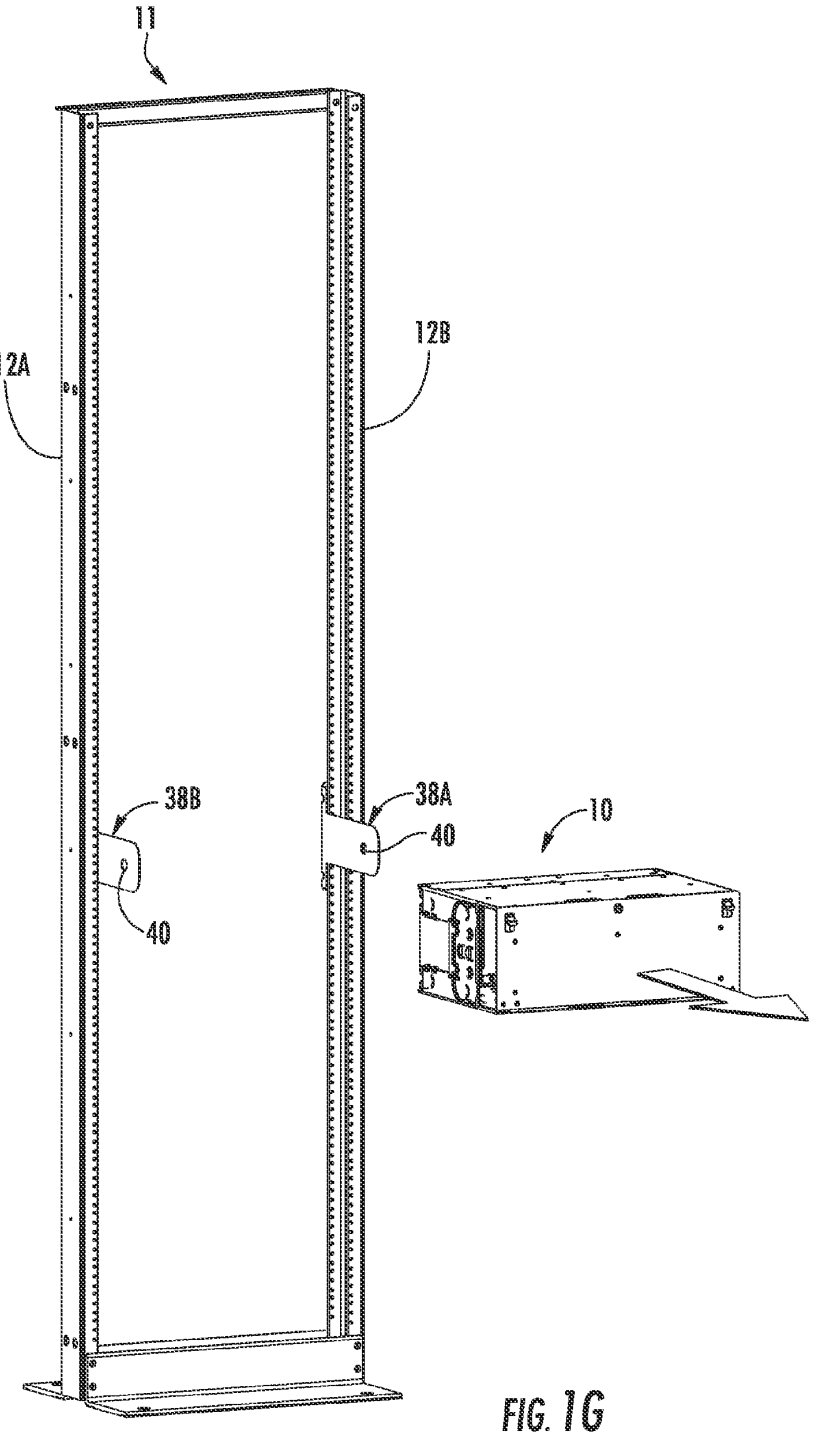

FIG. 1G

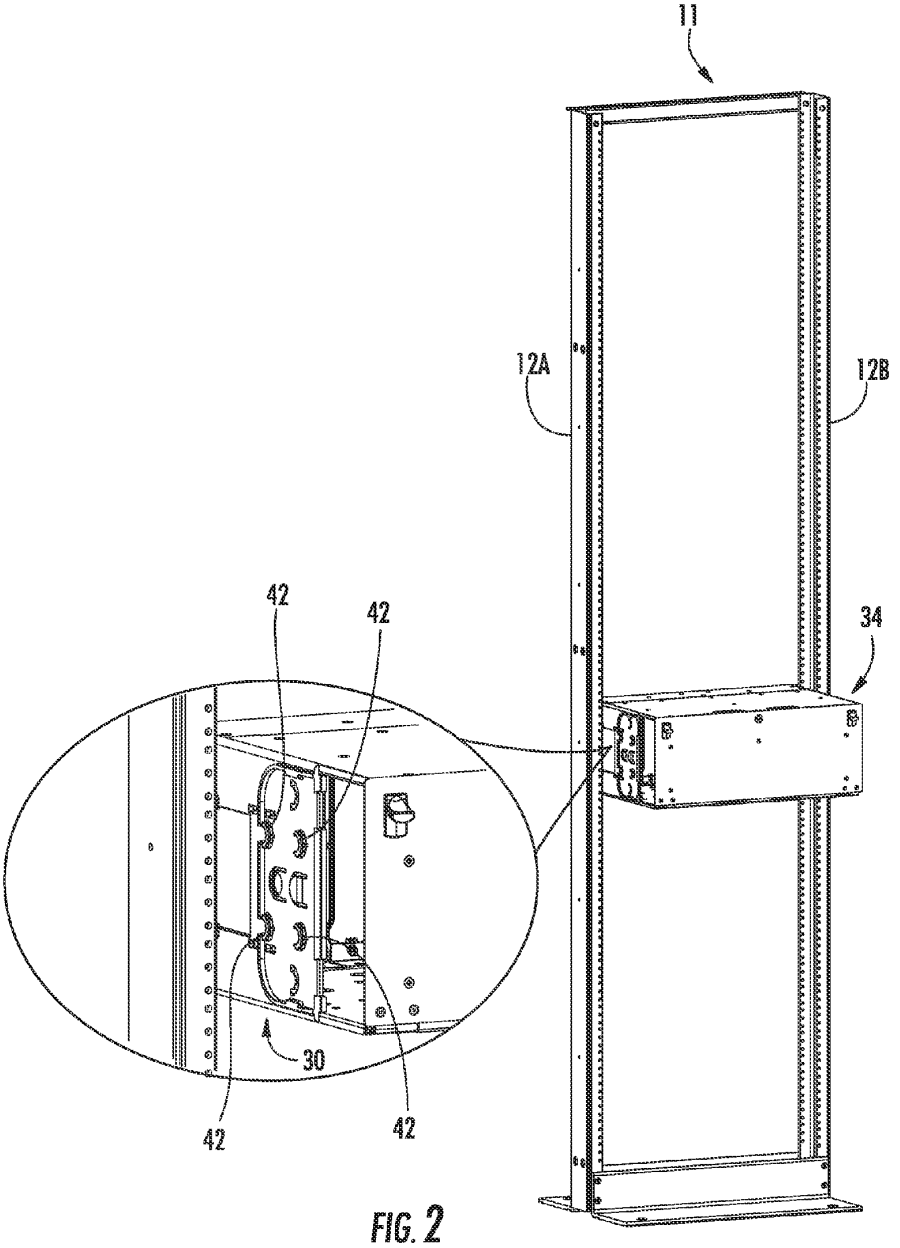

FIG. 2

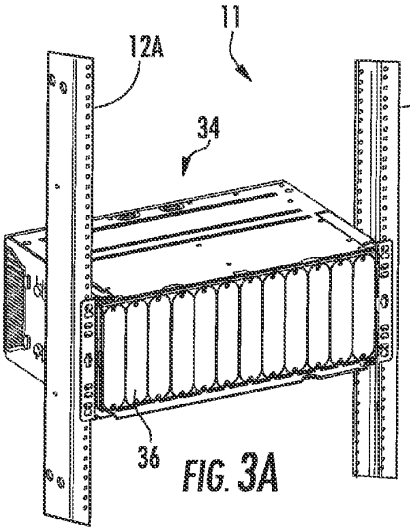

FIG. 3A

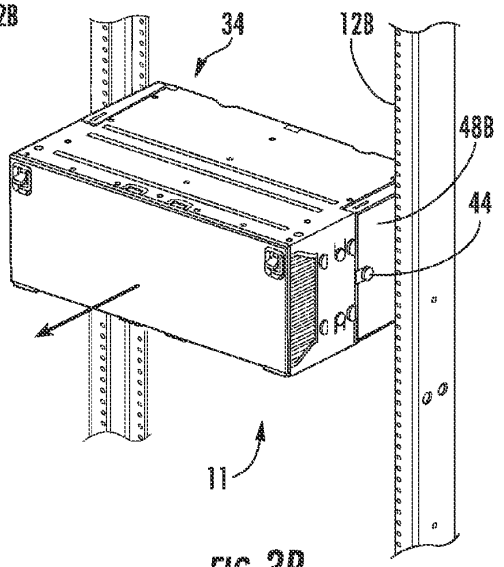

FIG. 3B

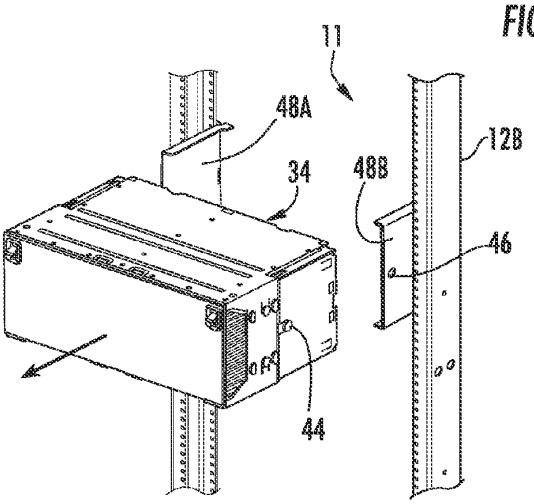

FIG. 3C

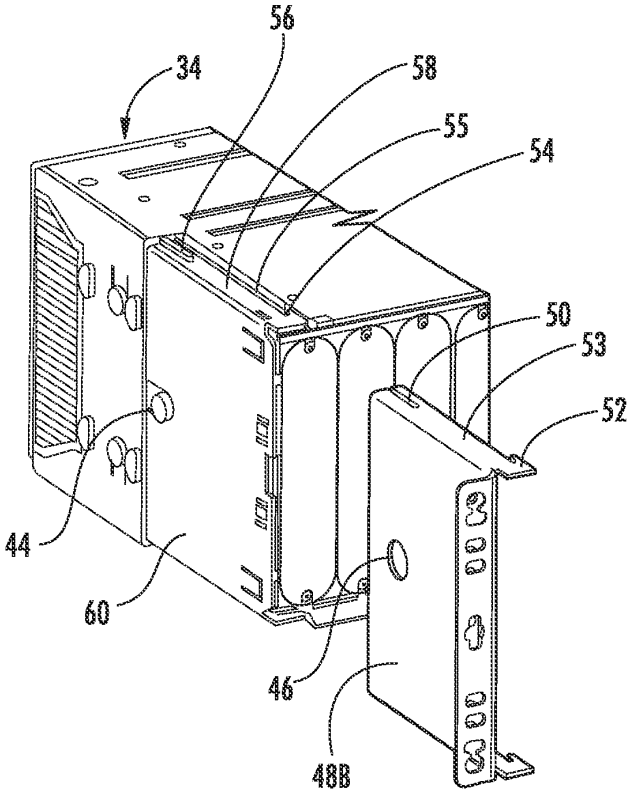

FIG. 4

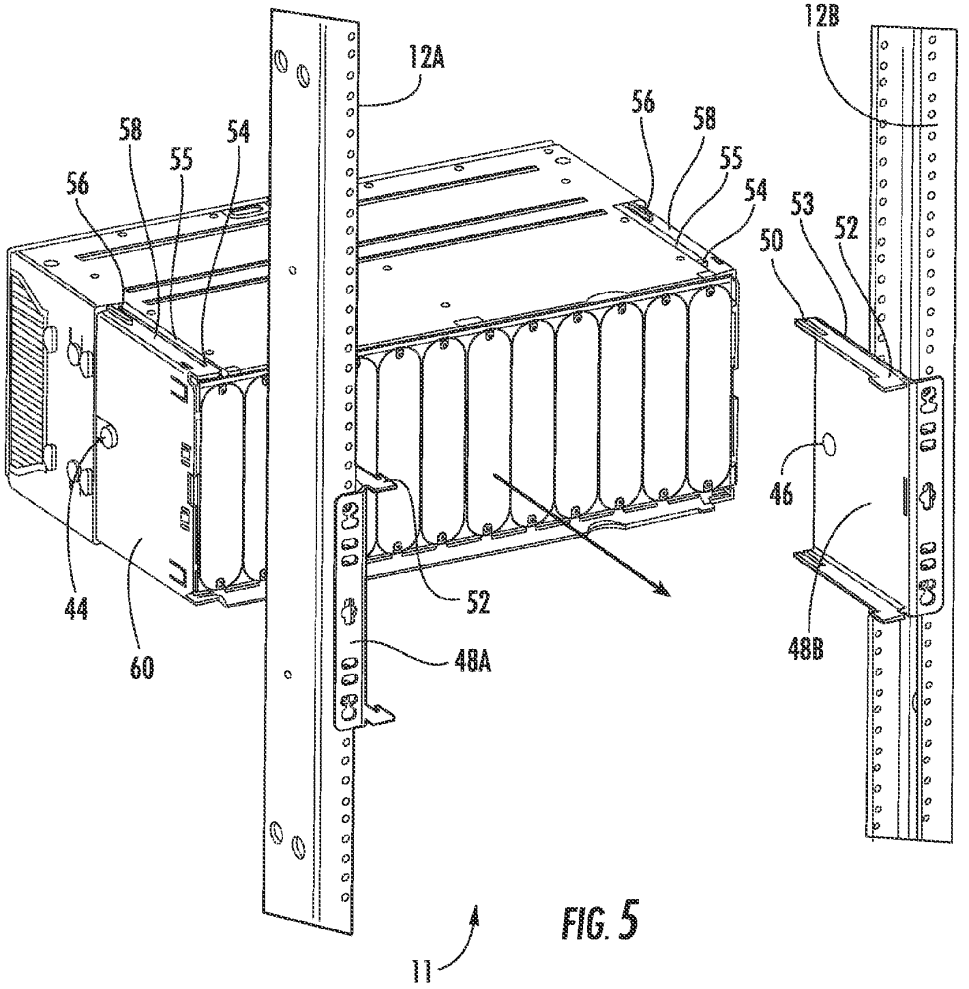

FIG. 5

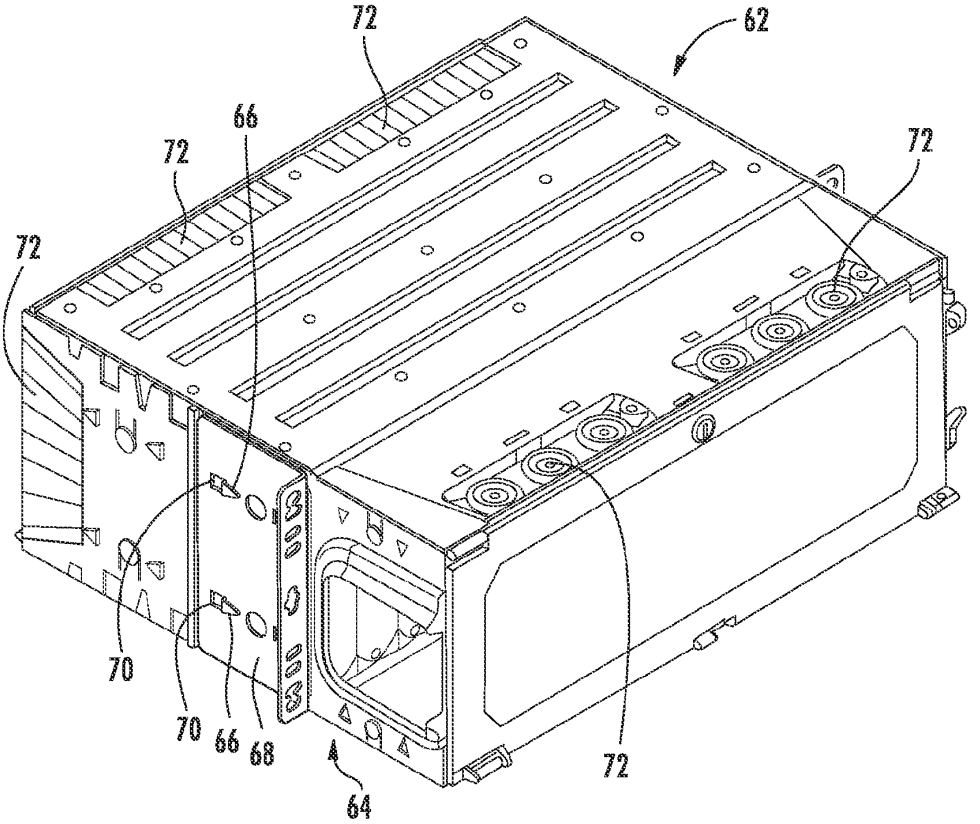

FIG. 6

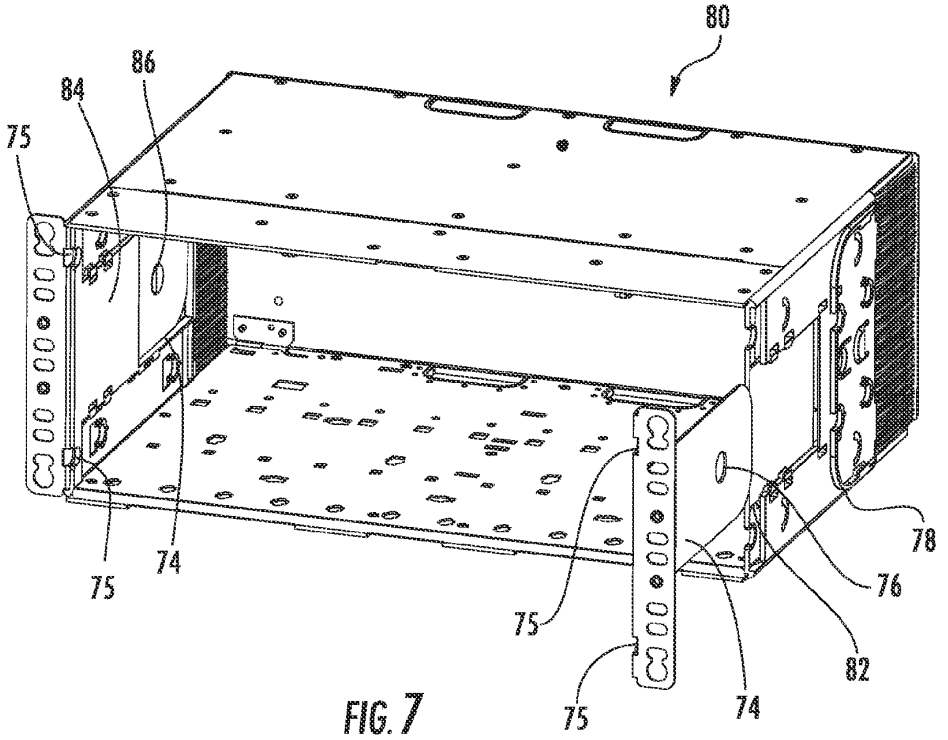

FIG. 7

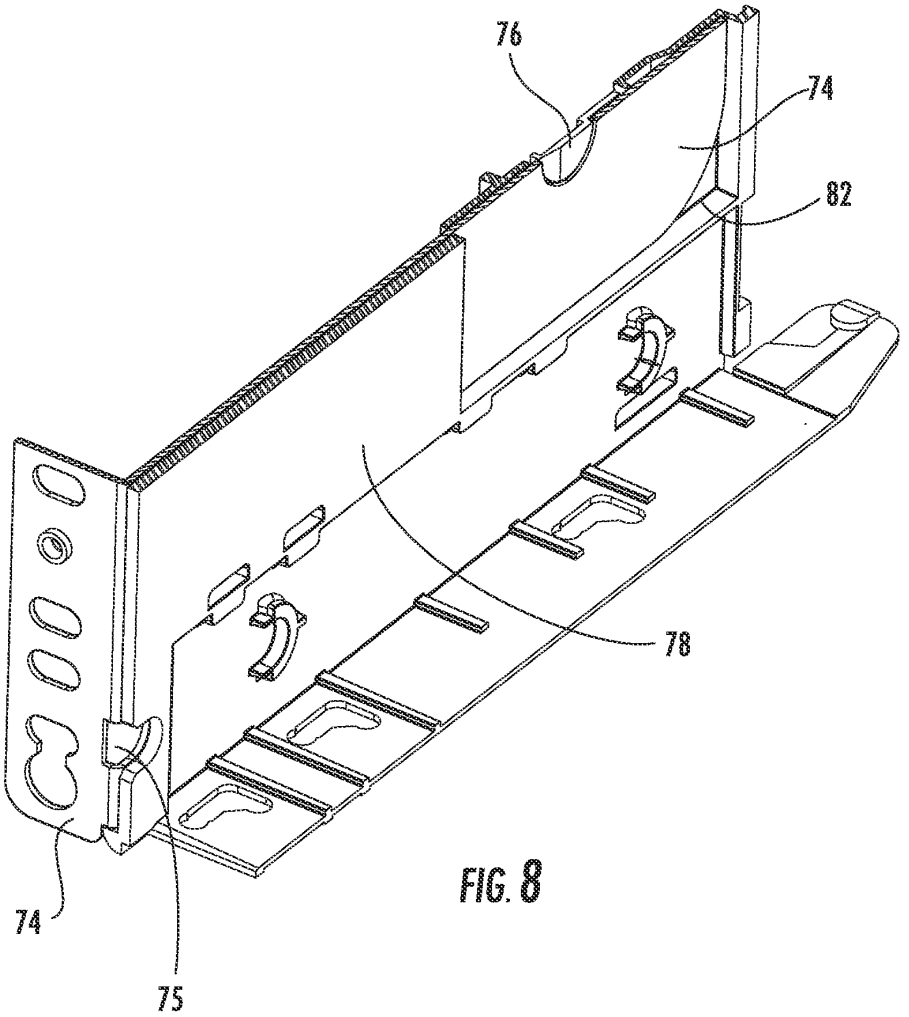

FIG. 8

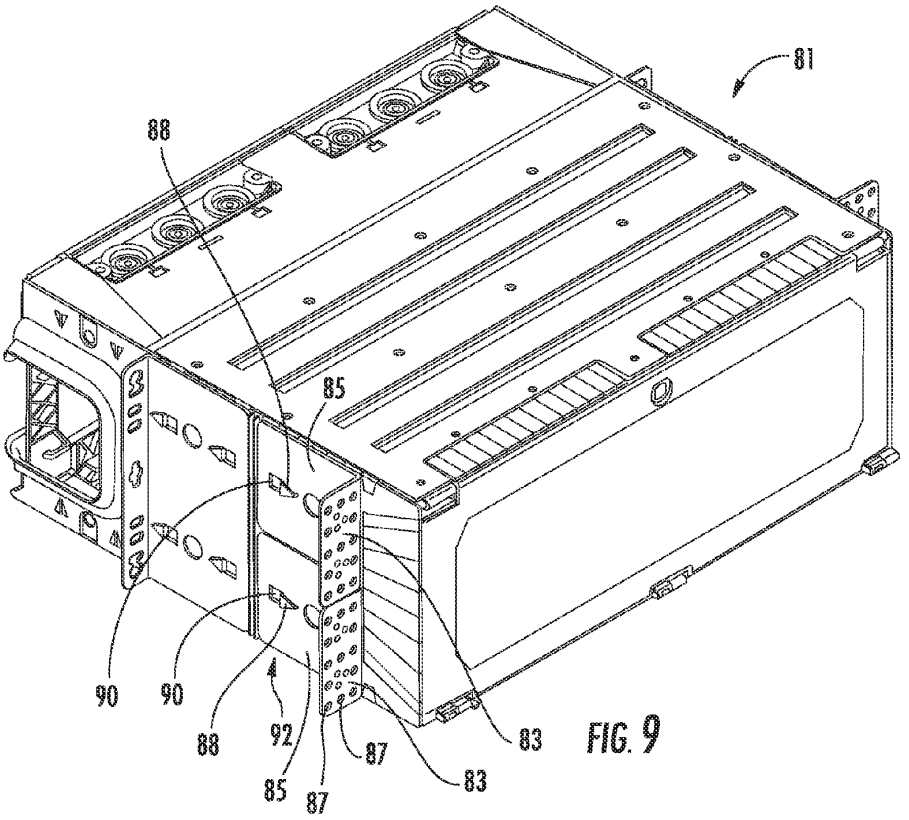

FIG. 9

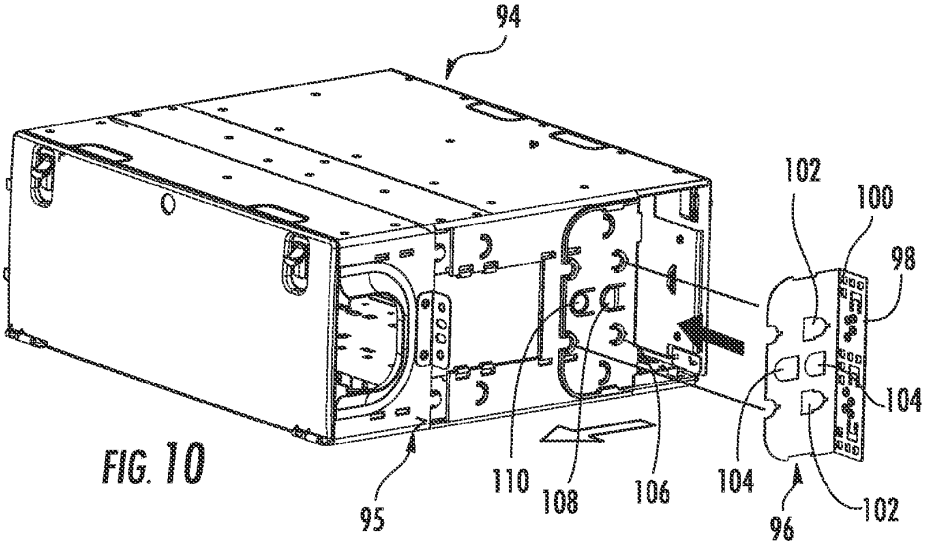

FIG. 10

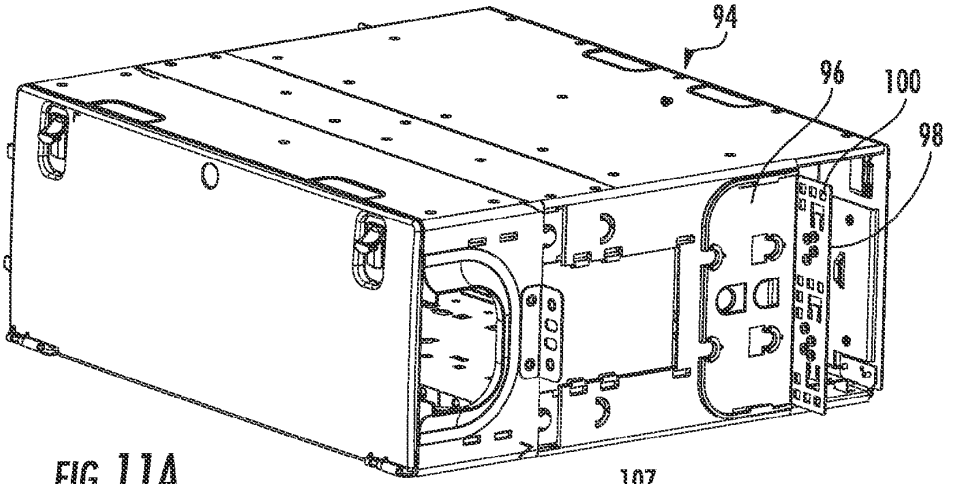

FIG. 11A

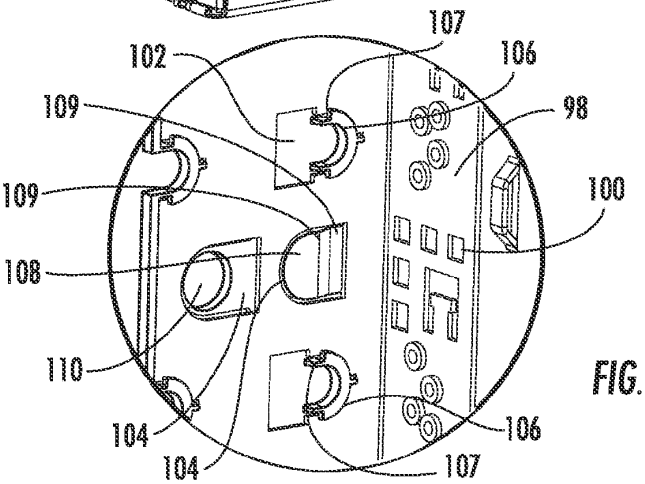

FIG. 11B

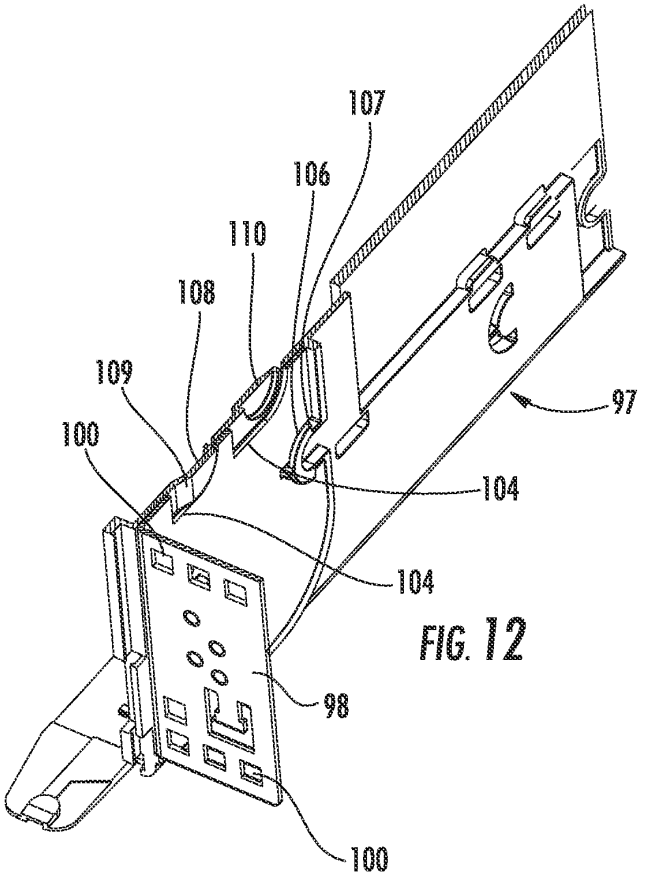

FIG. 12

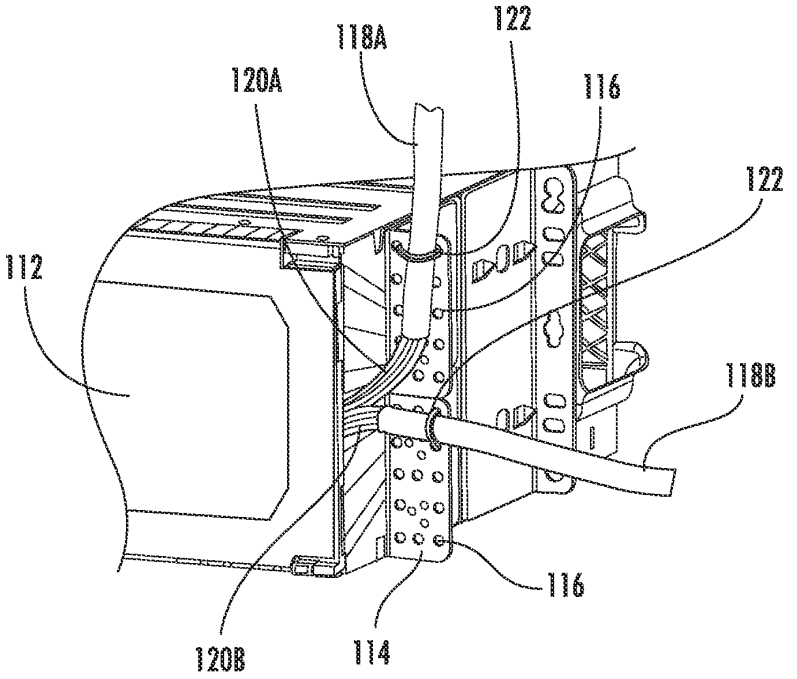

FIG. 13

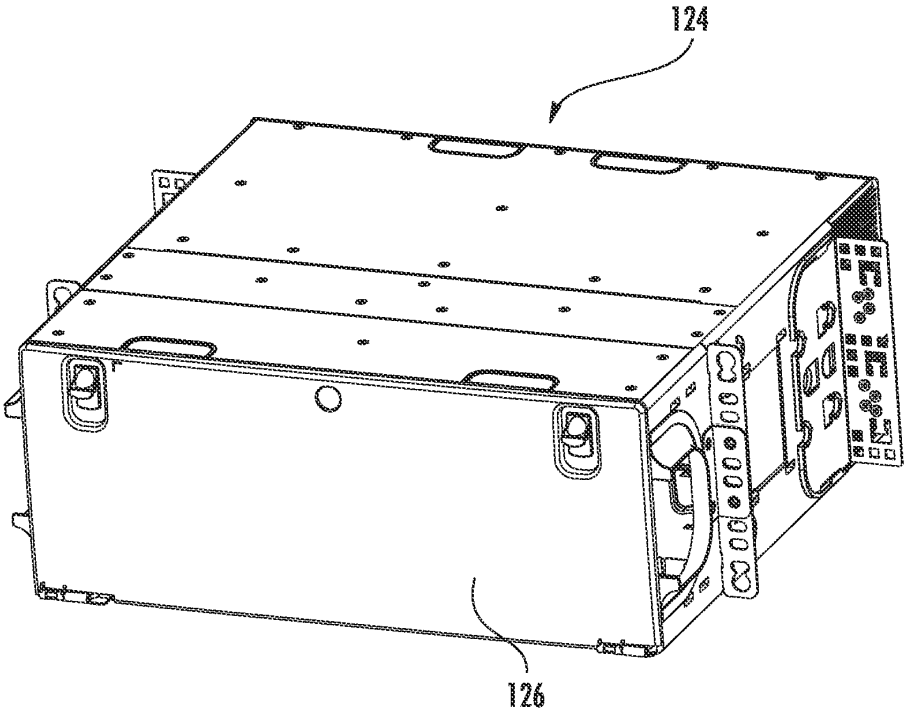

FIG. 14

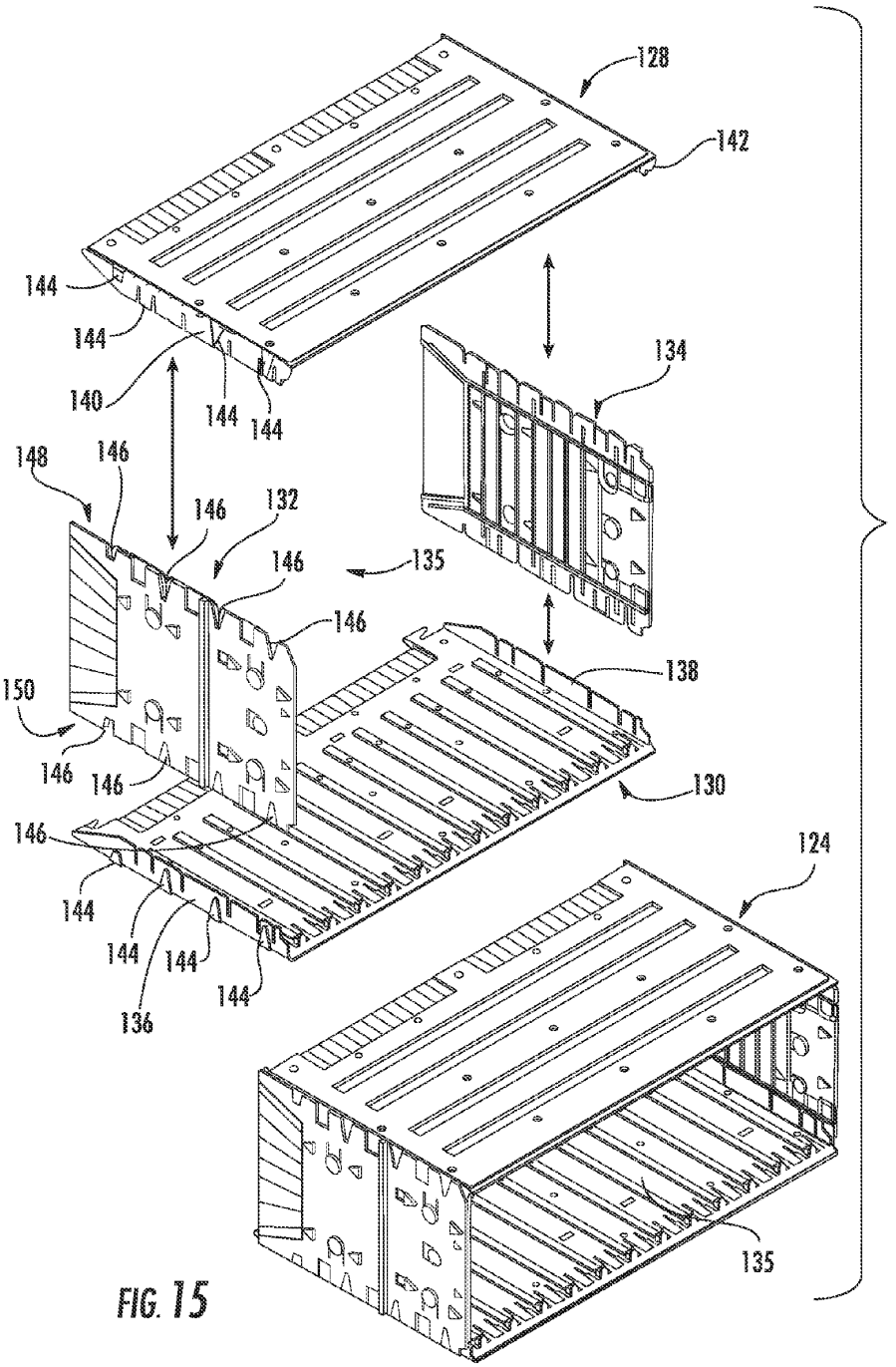
128
142
144
144
140
144
144
134
148
146
146
132
146
135
146
138
150
146
146
130
146
124
144
144
144
144
136
135

FIG. 15

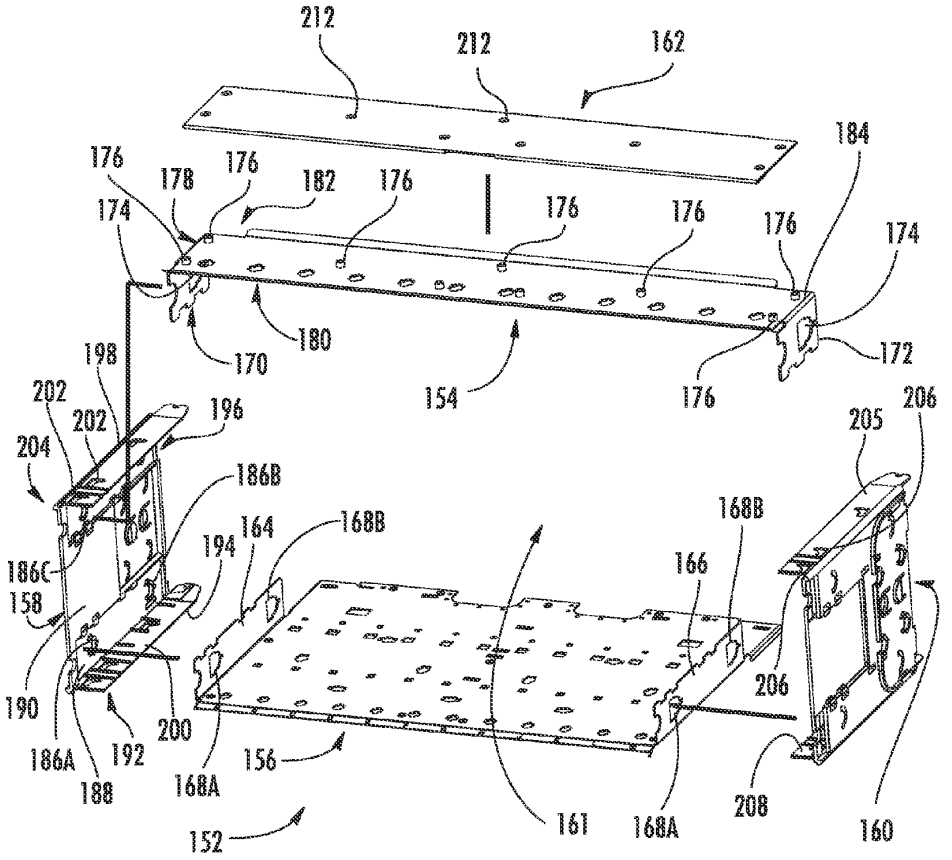
212
212
162
184
176
178
176
182
176
176
176
176
174
174
180
170
154
176
172
198
202
202
196
204
186B
205
206
168B
164
168B
194
166
186C
158
190
200
206
186A
192
188
168A
156
161
168A
208
160
152

FIG. 16

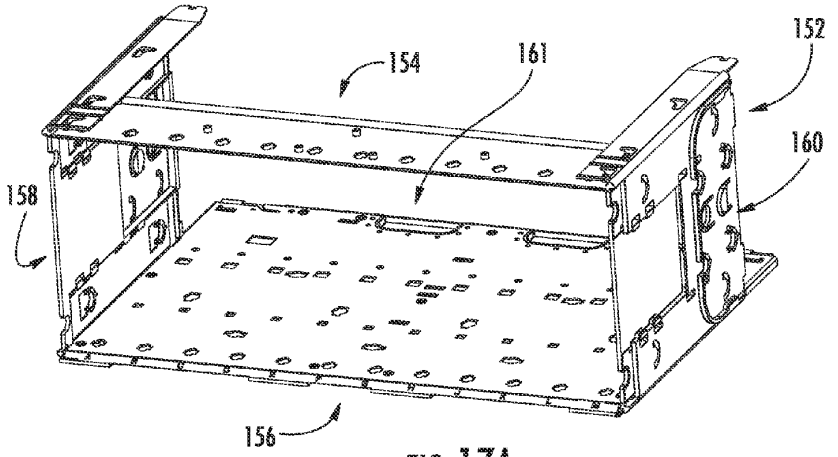

FIG. 17A

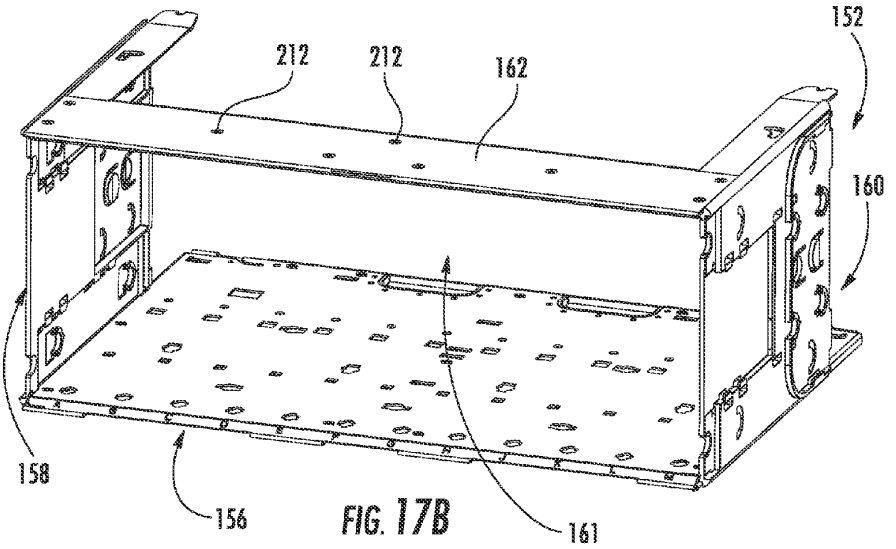

FIG. 17B

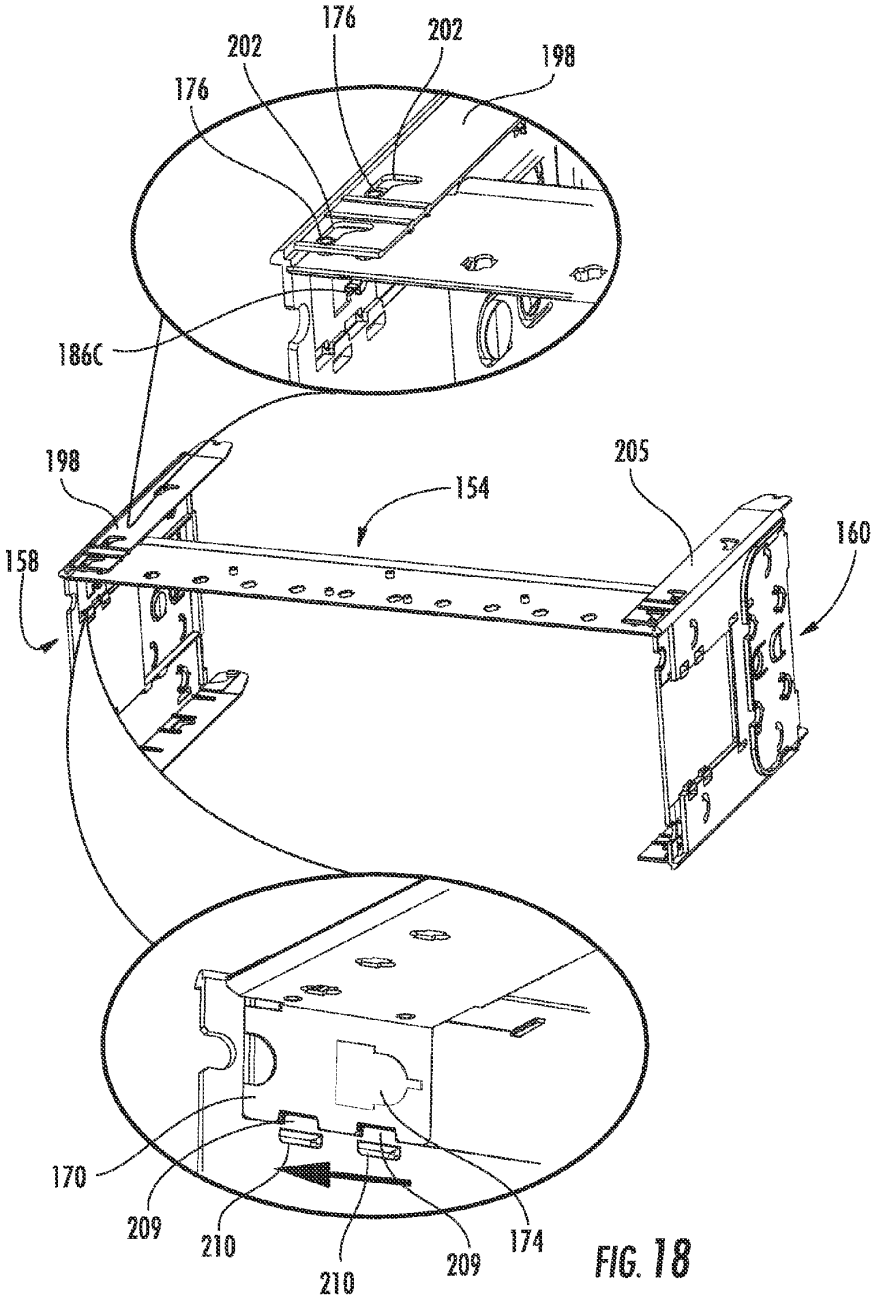
176
202
202
198
176
186C
198
205
154
160
158
170
209
210
210
209
174

FIG. 18

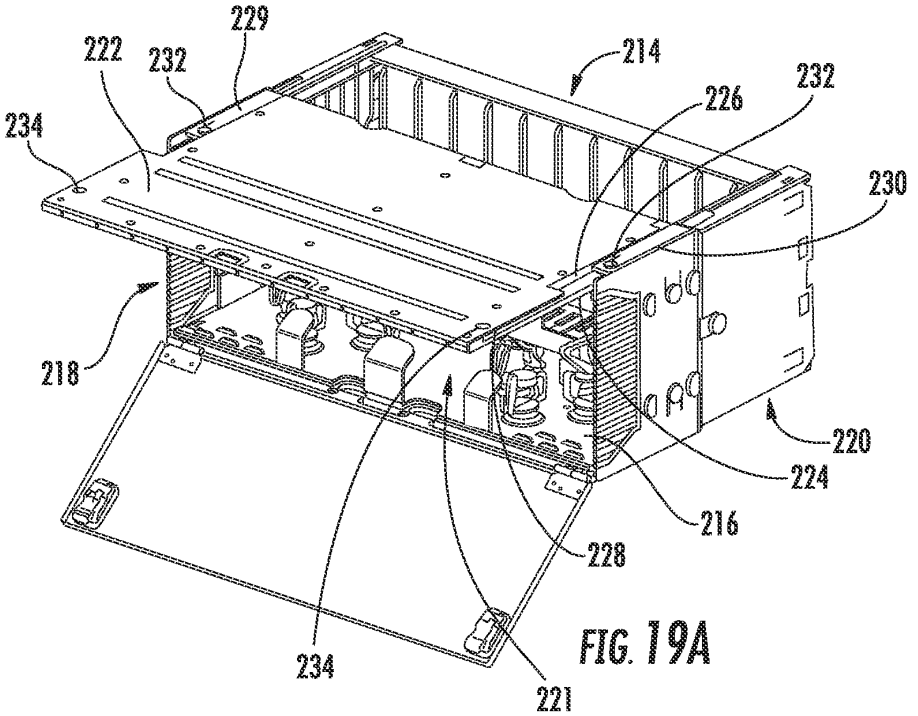

FIG. 19A

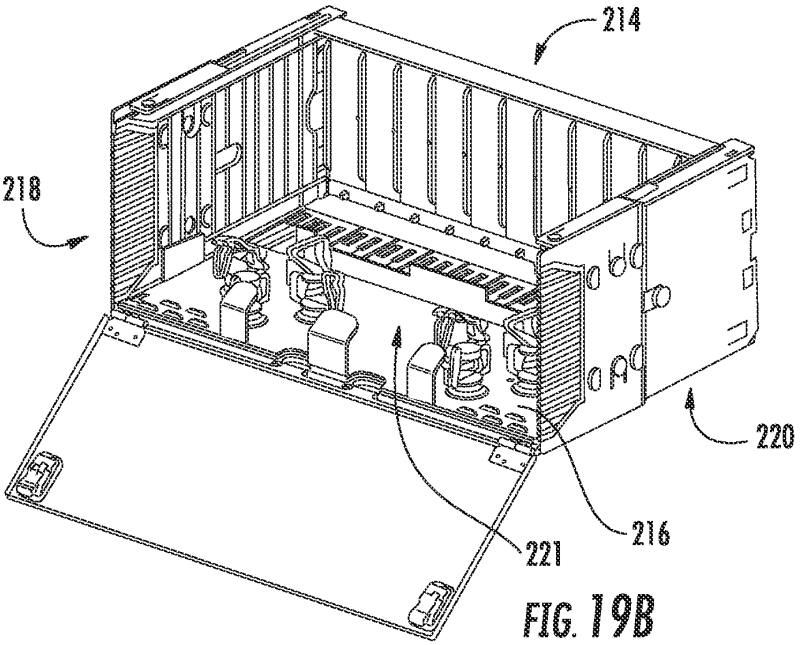

FIG. 19B

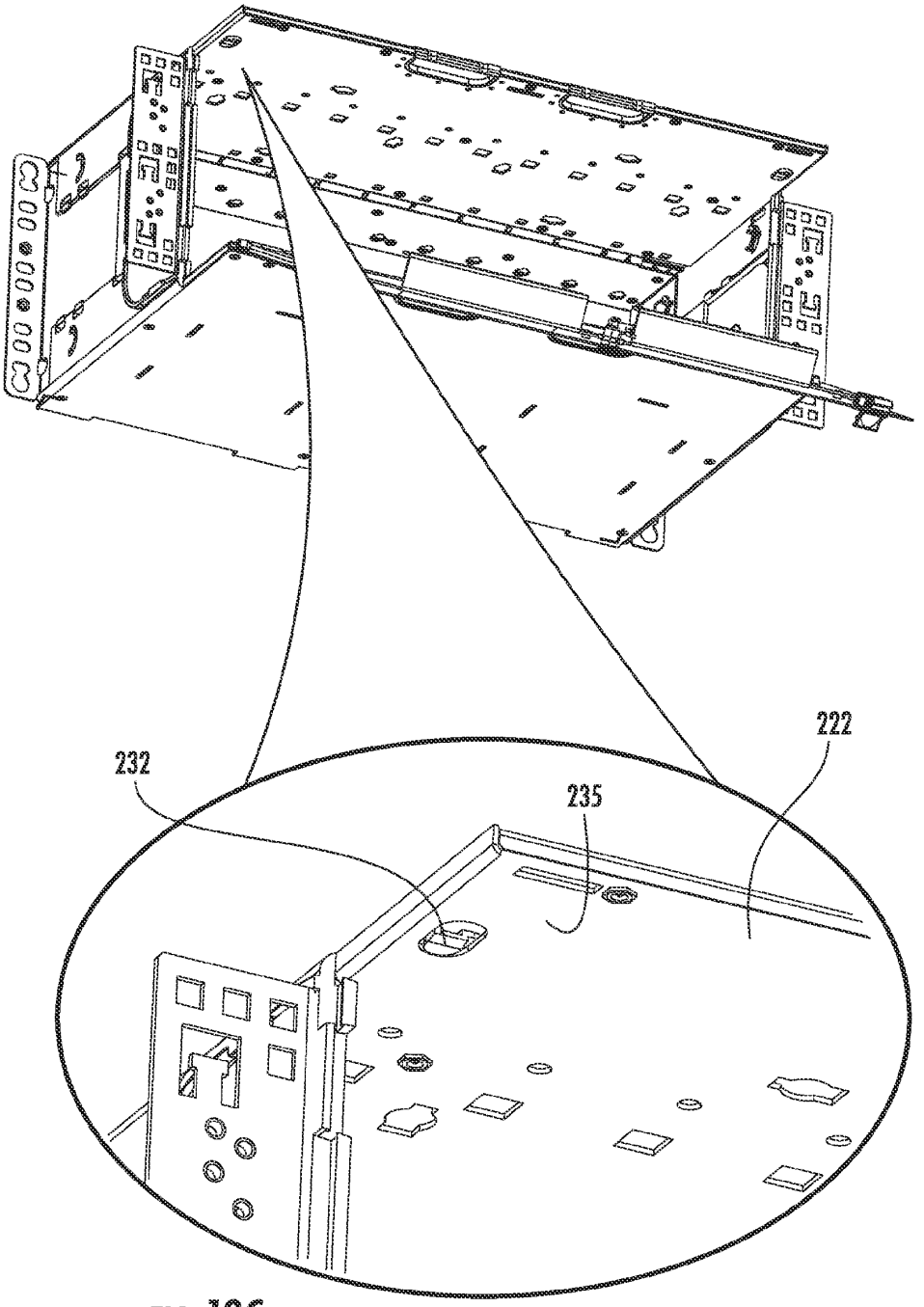

FIG. 19C

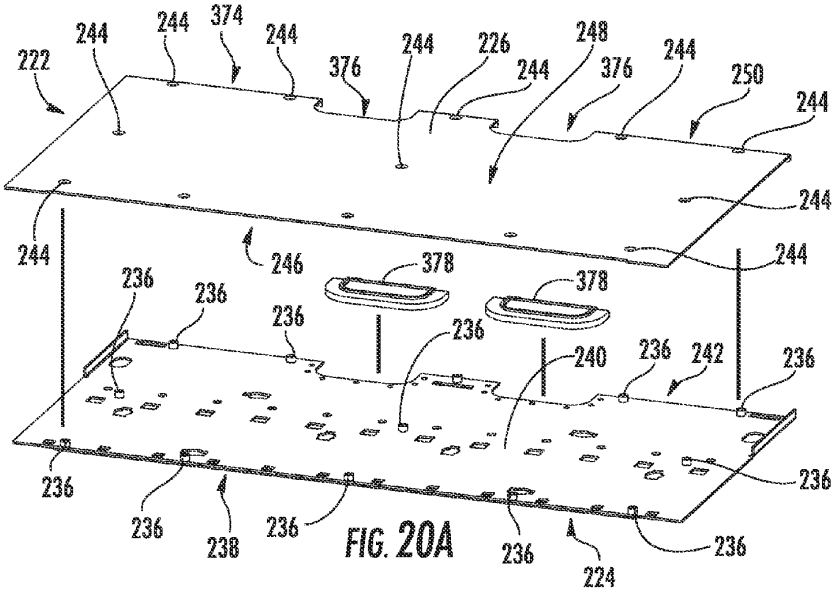

FIG. 20A

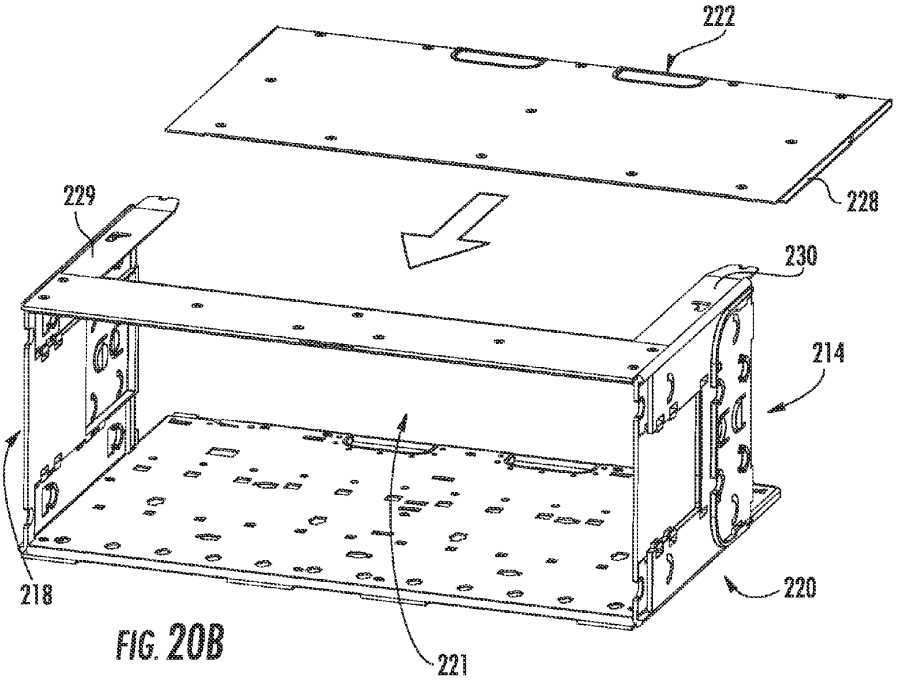

FIG. 20B

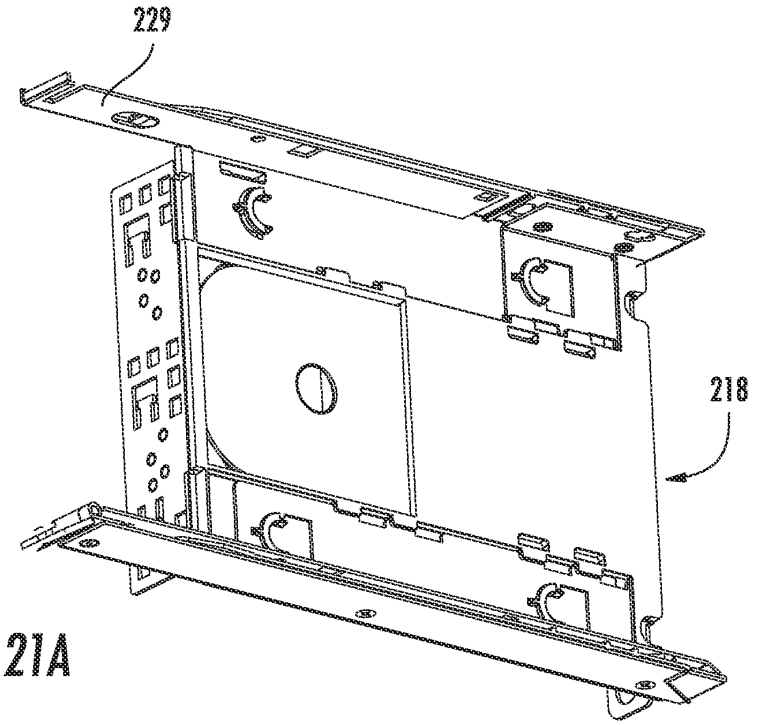

FIG. 21A

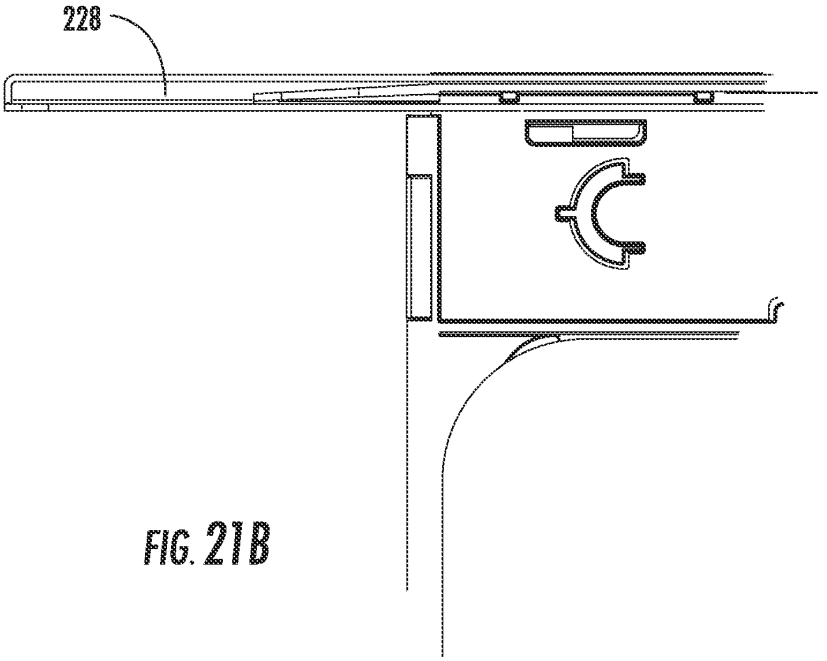

FIG. 21B

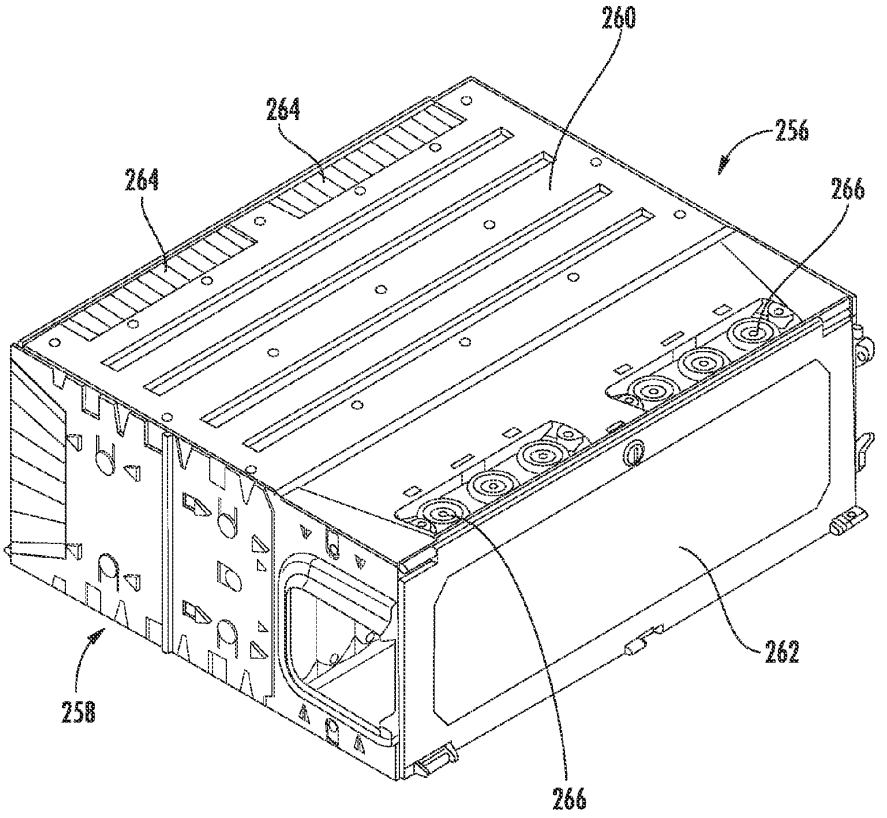

FIG. 22

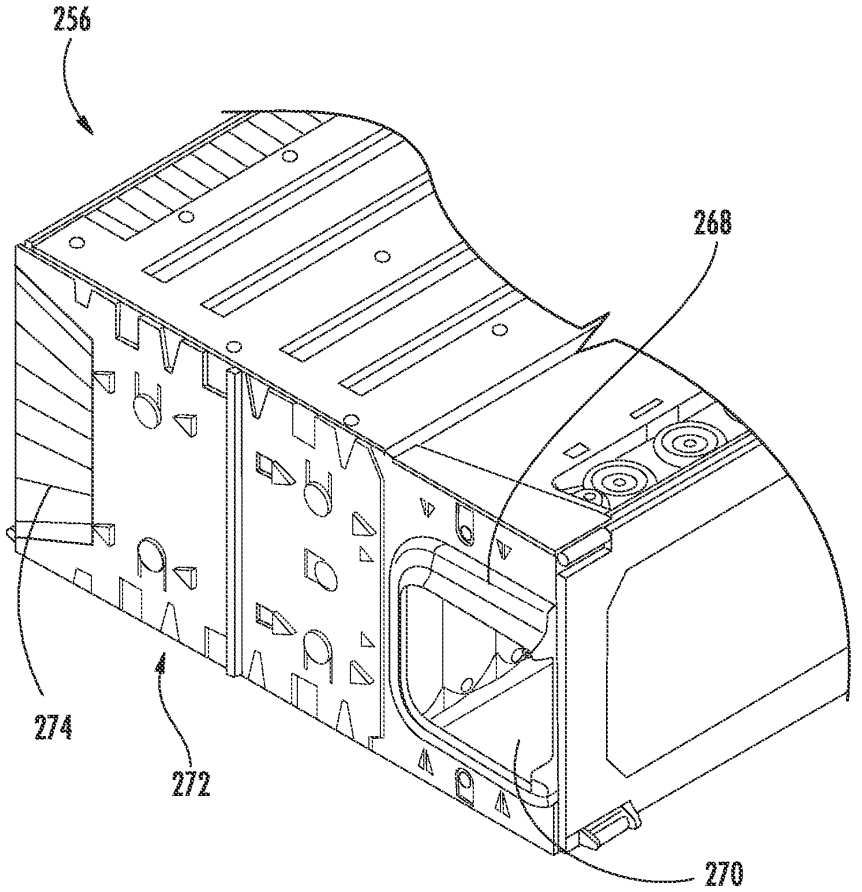

FIG. 23

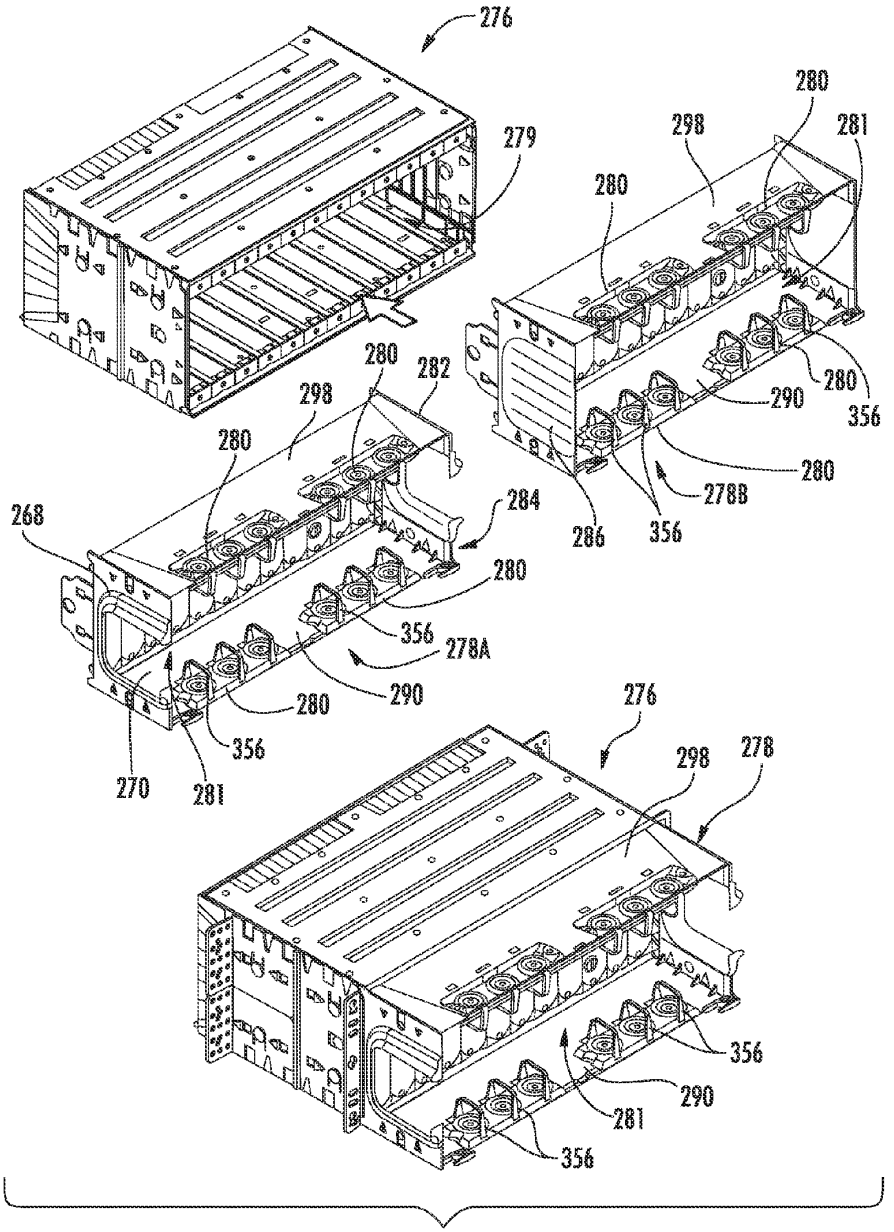
276
279
280
298
281
280
280
282
298
280
290
356
280
278B
286
356
284
268
280
356
278A
290
280
356
270
281
276
298
278
356
290
281
356

FIG. 24

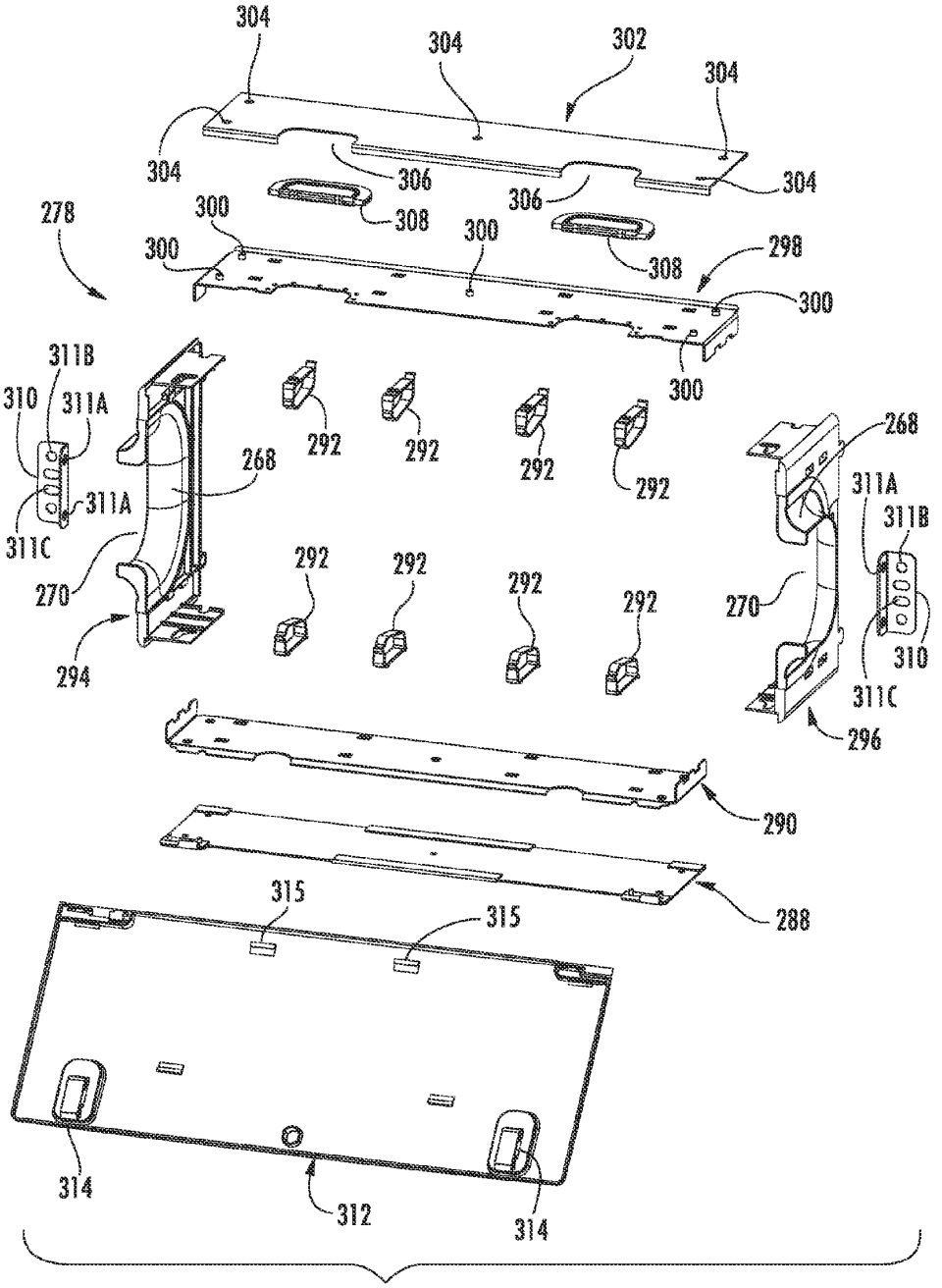
304
304
302
304
304
306
306
304
278
300
308
300
308
298
300
300
300
311B
310
311A
268
292
292
292
292
268
311A
311B
311A
311C
270
292
292
292
292
270
310
294
311C
296
290
288
315
315
314
312
314

FIG. 25

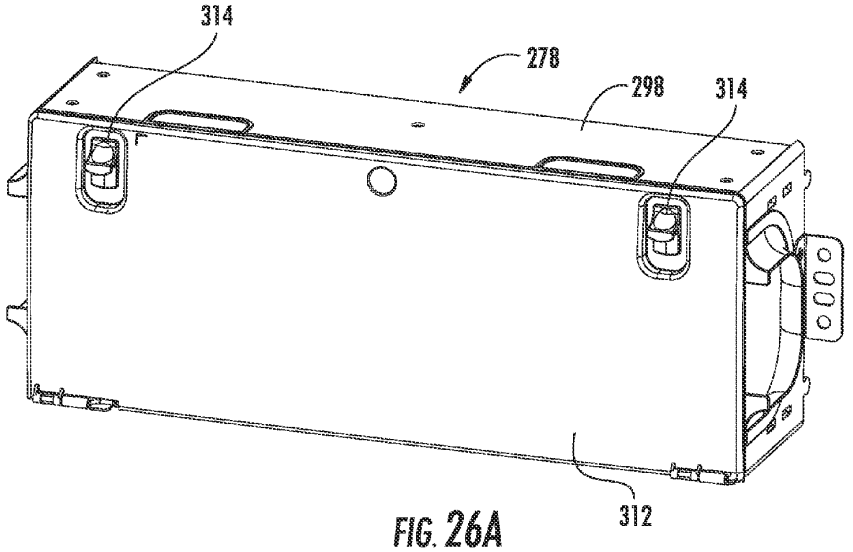

FIG. 26A

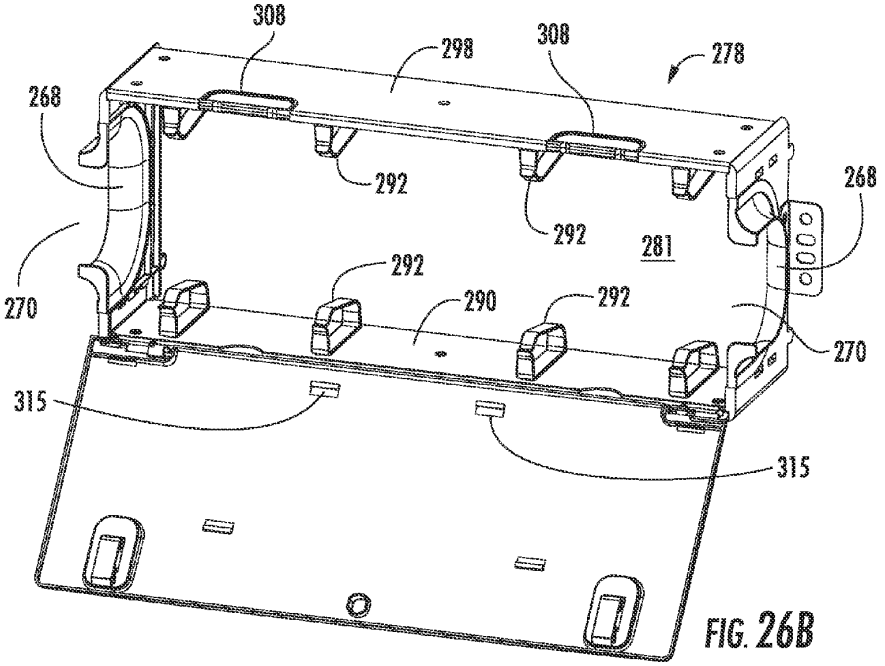

FIG. 26B

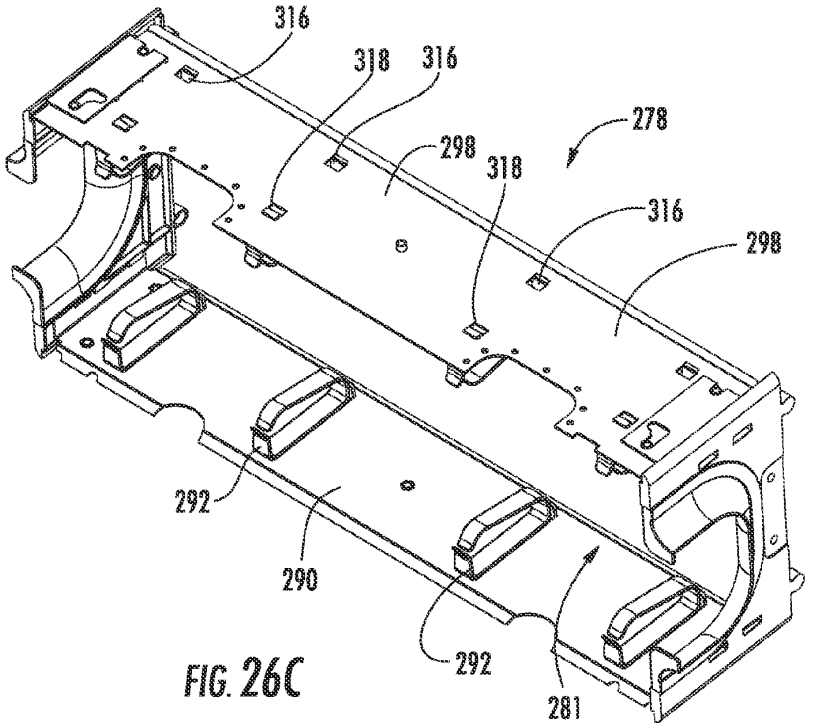

FIG. 26C

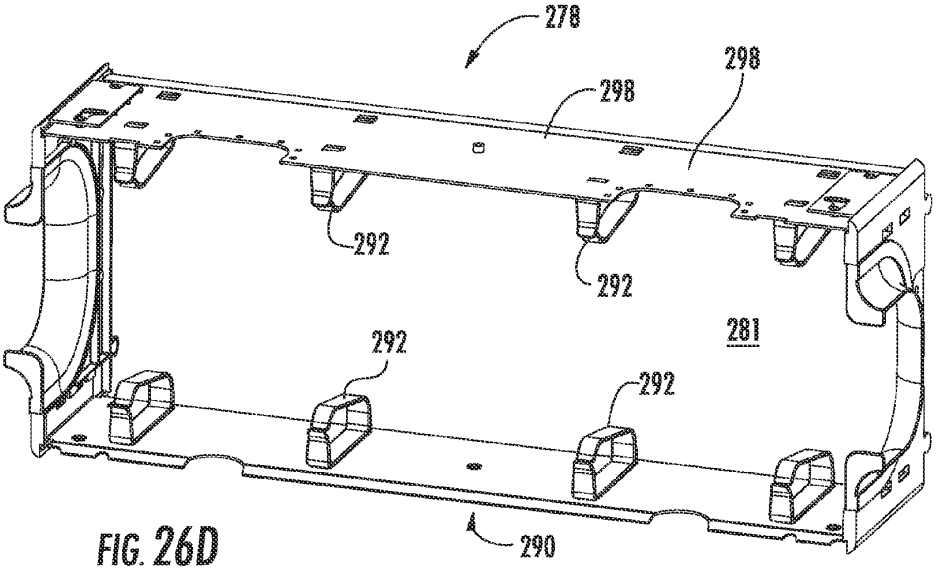

FIG. 26D

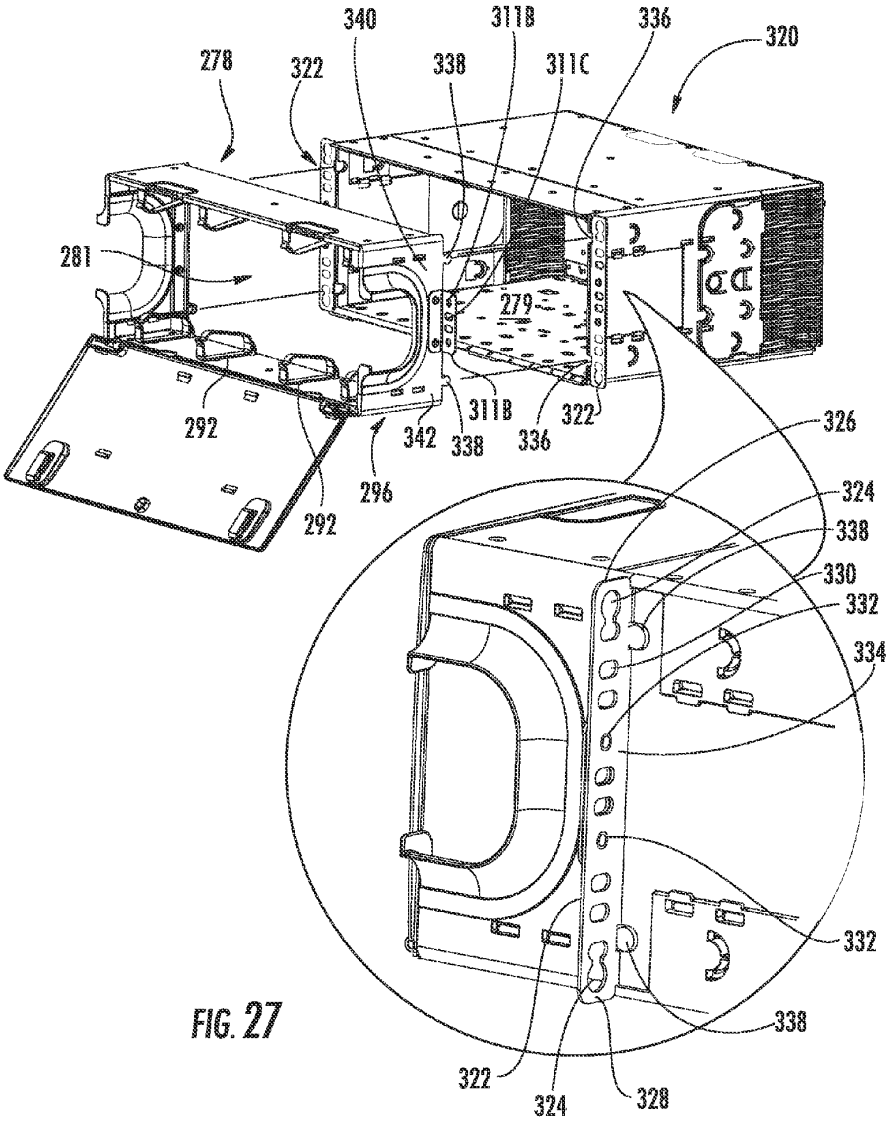
340
311B
336
320
278
322
338
311C
281
279
292
342
338
311B
336
322
296
292
326
324
338
330
332
334
332
338
322
324
328

FIG. 27

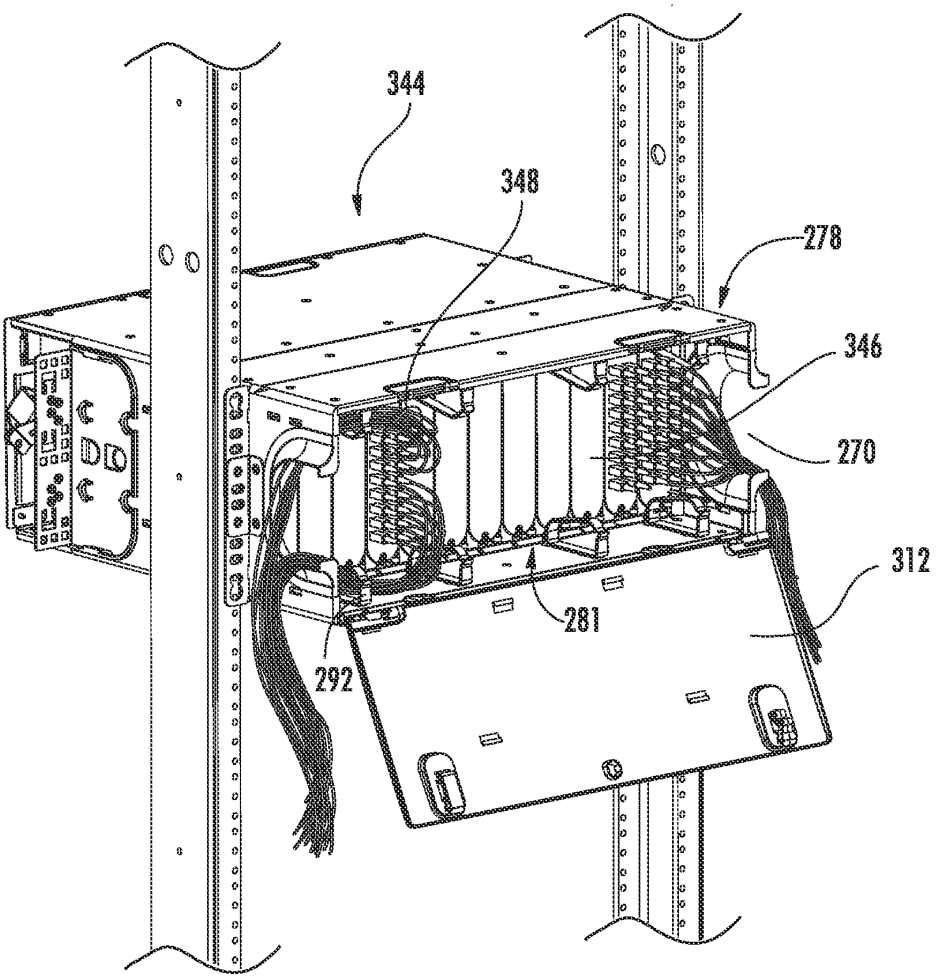

FIG. 28

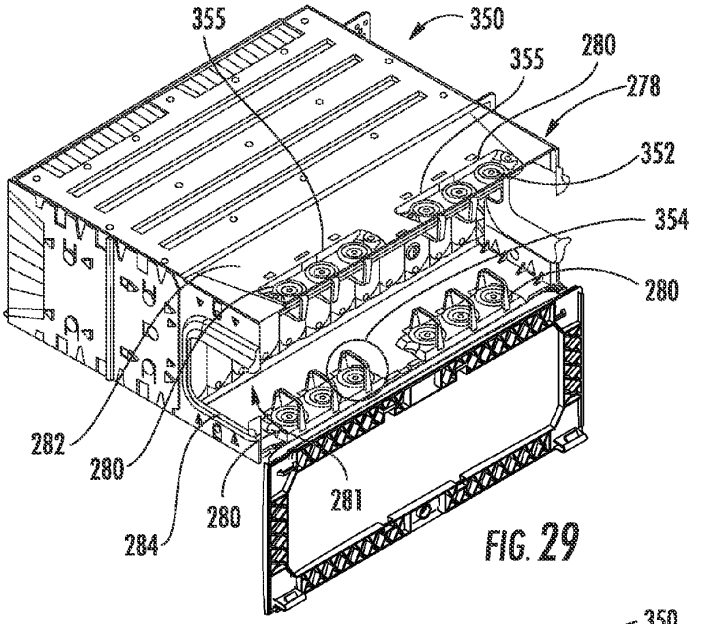
355
350
355
280
278
352
354
280
282
280
284
280
281

FIG. 29

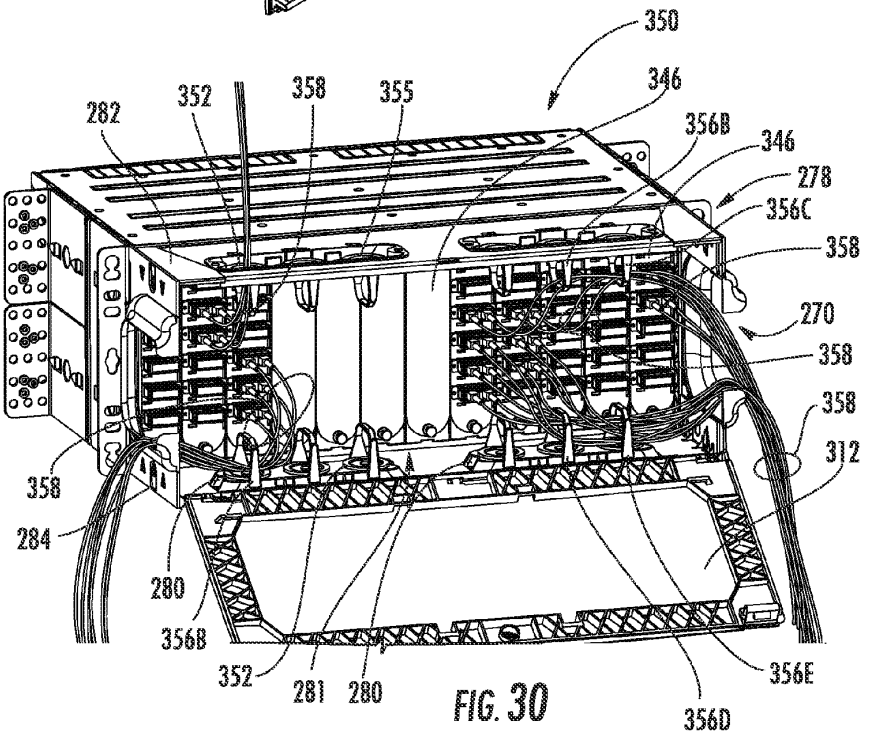
350
282
352
358
355
346
356B
346
278
356C
358
270
358
358
312
358
284
280
356B
352
281
280
356E
356D

FIG. 30

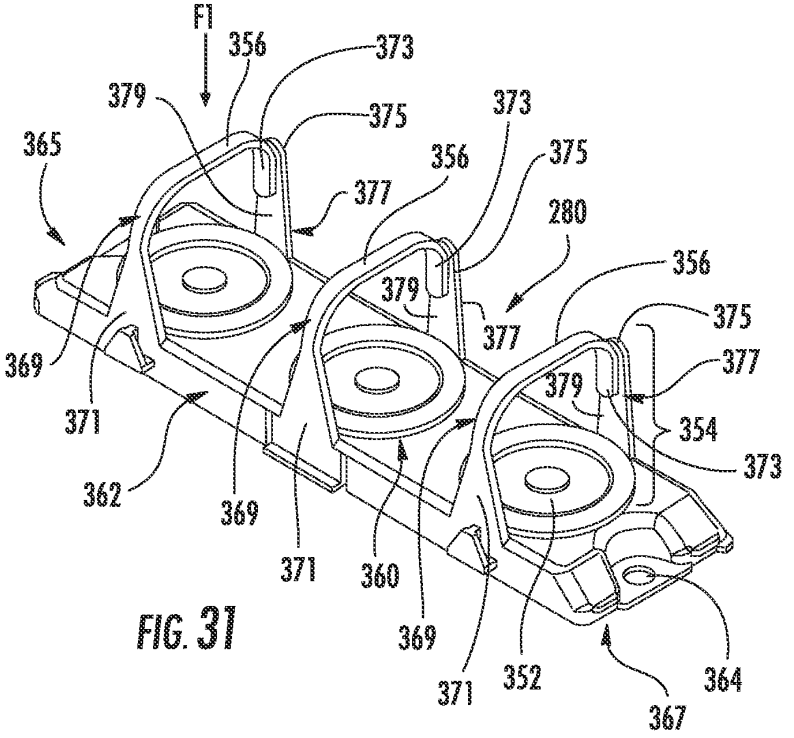
F1
356
373
379
375
373
365
356
375
377
280
356
379
375
377
377
369
379
371
354
373
362
369
371
360
369
371
352
364
367

FIG. 31

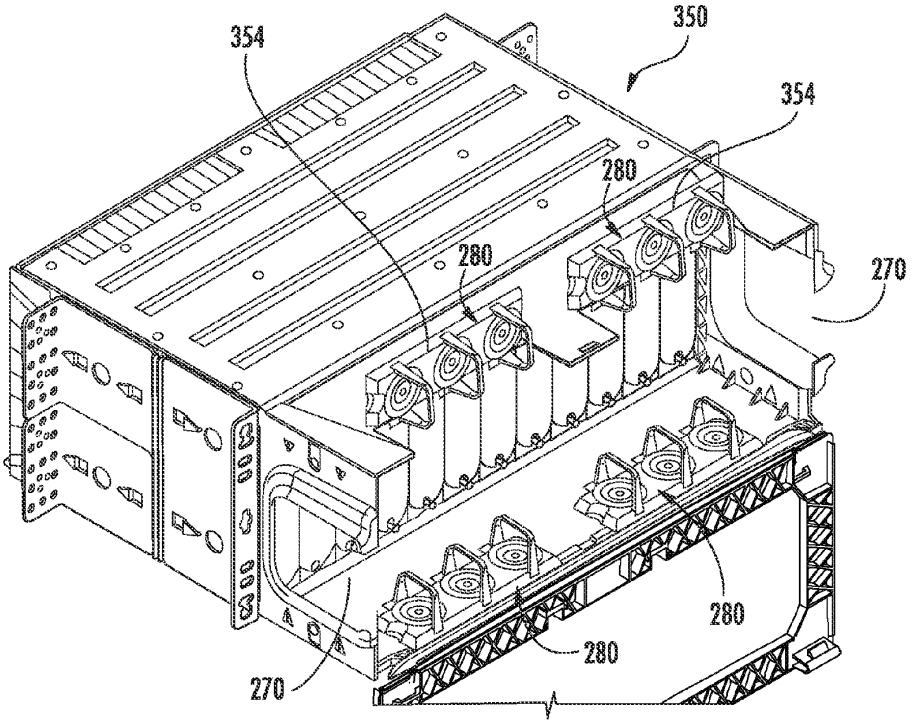

FIG. 32

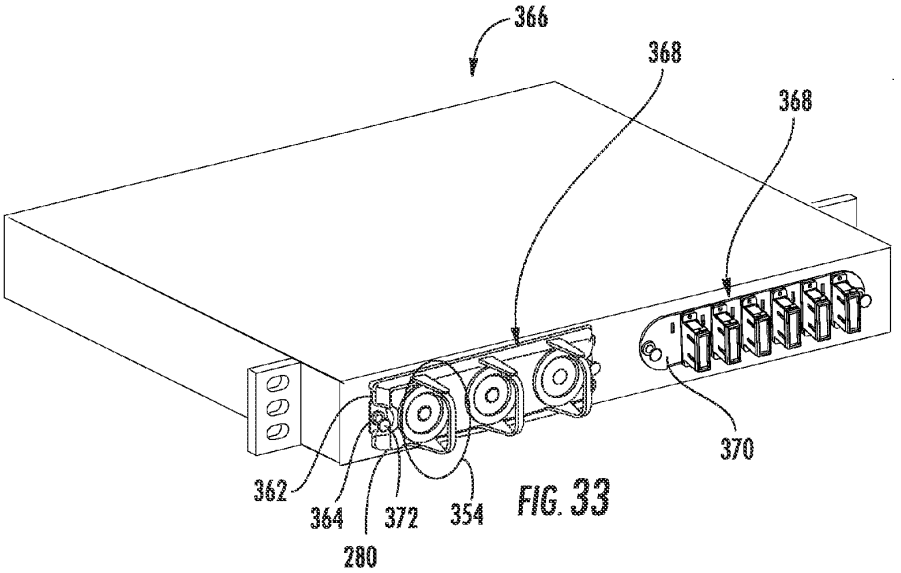

FIG. 33

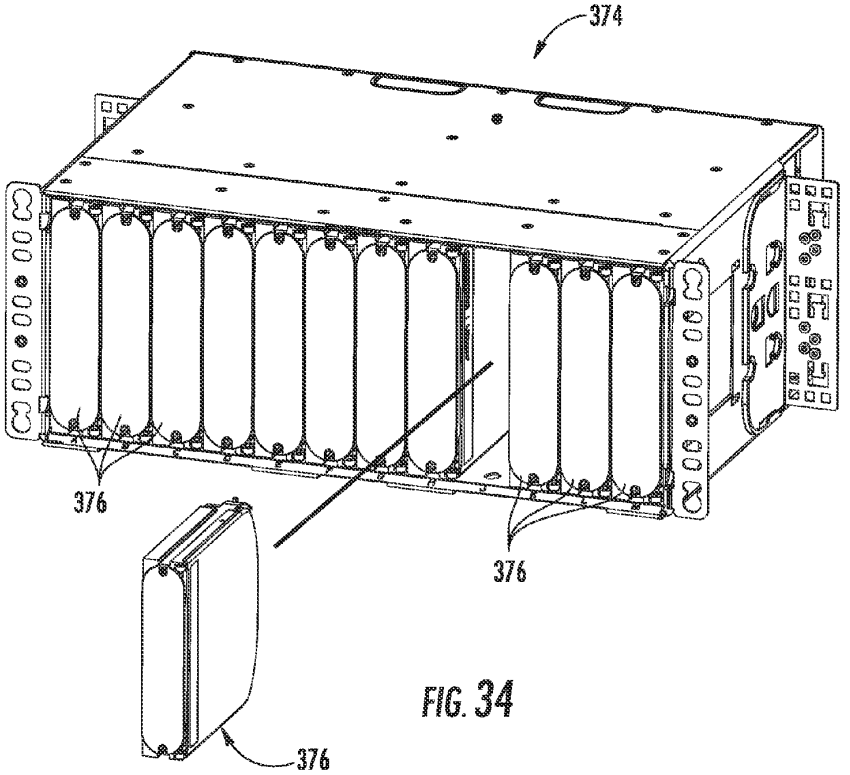

FIG. 34

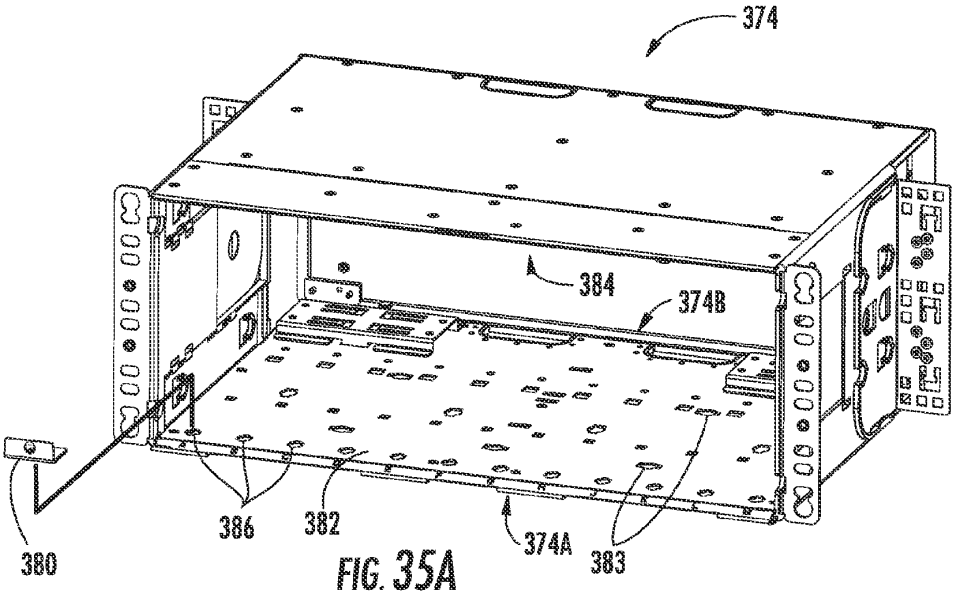

FIG. 35A

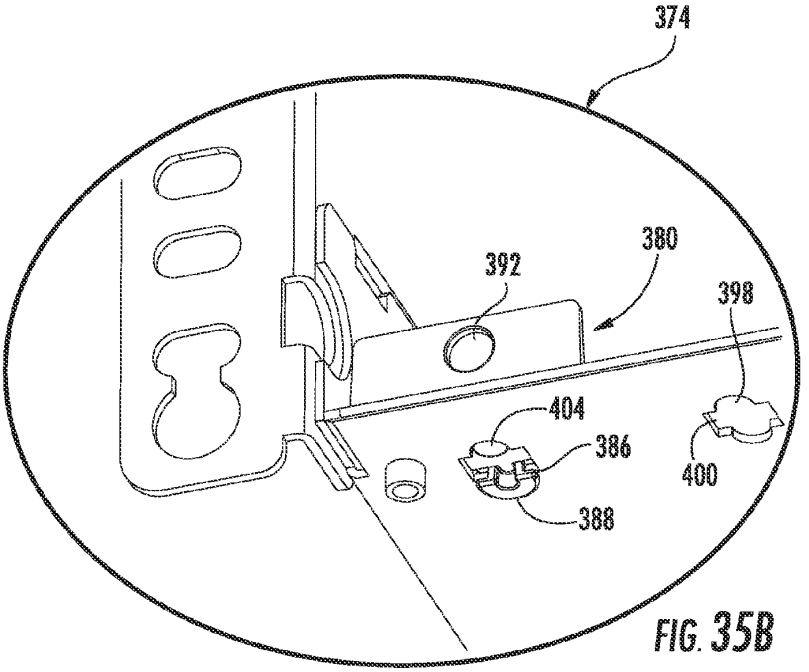

FIG. 35B

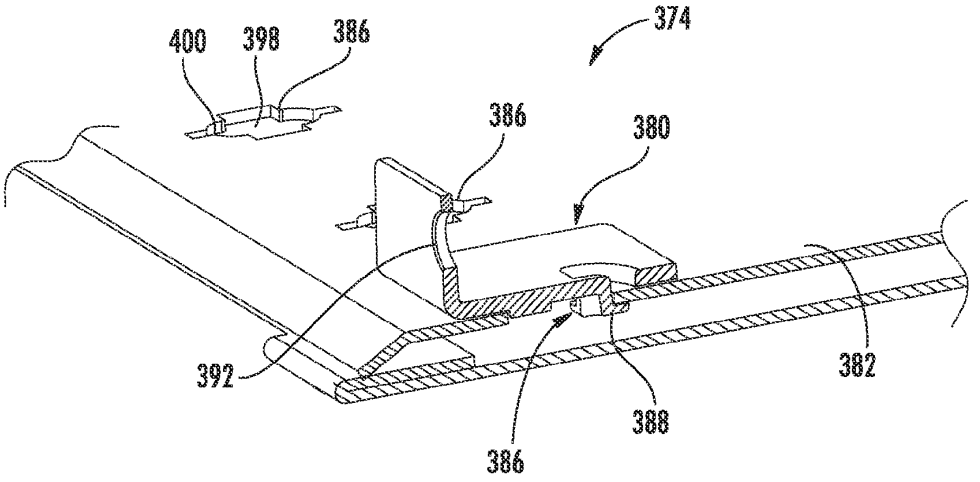

FIG. 35C

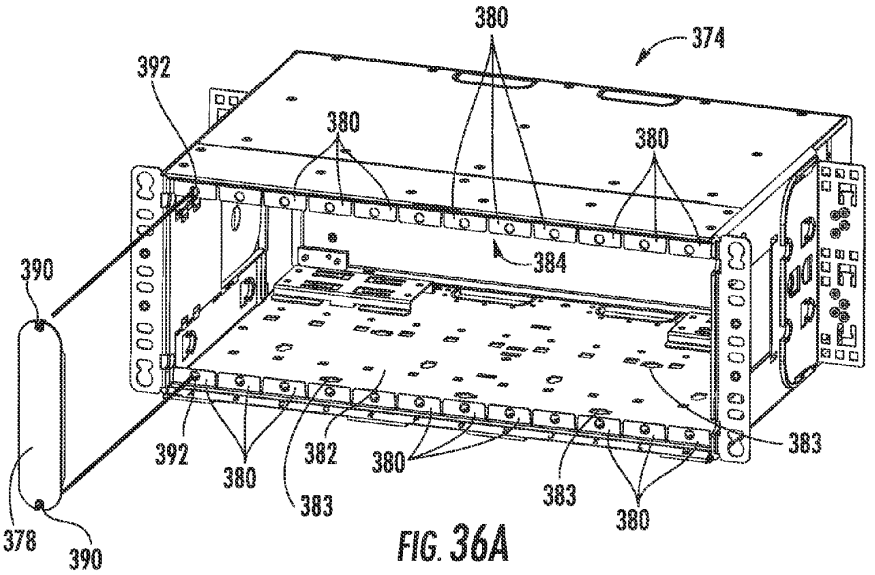

FIG. 36A

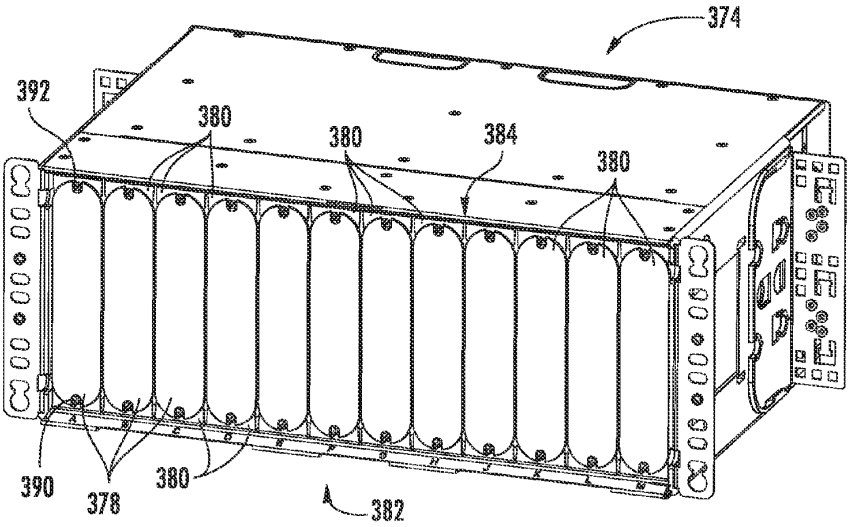

FIG. 36B

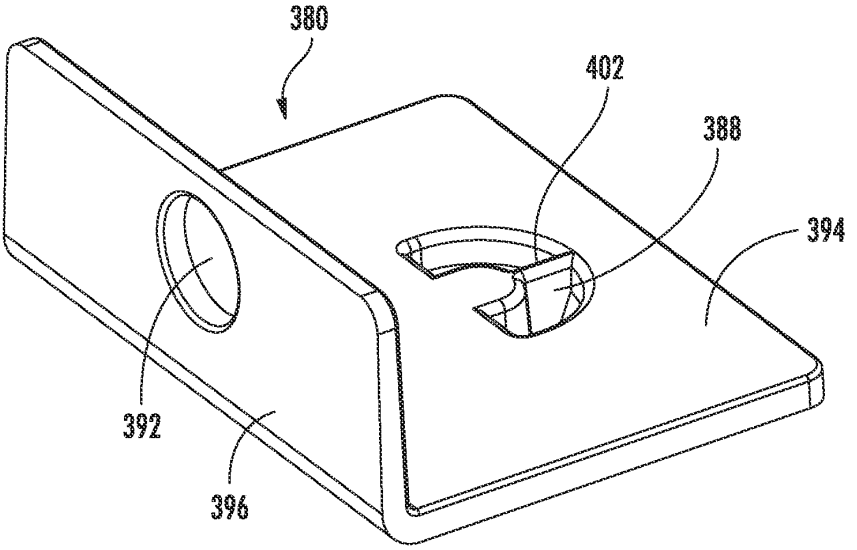

FIG. 37A

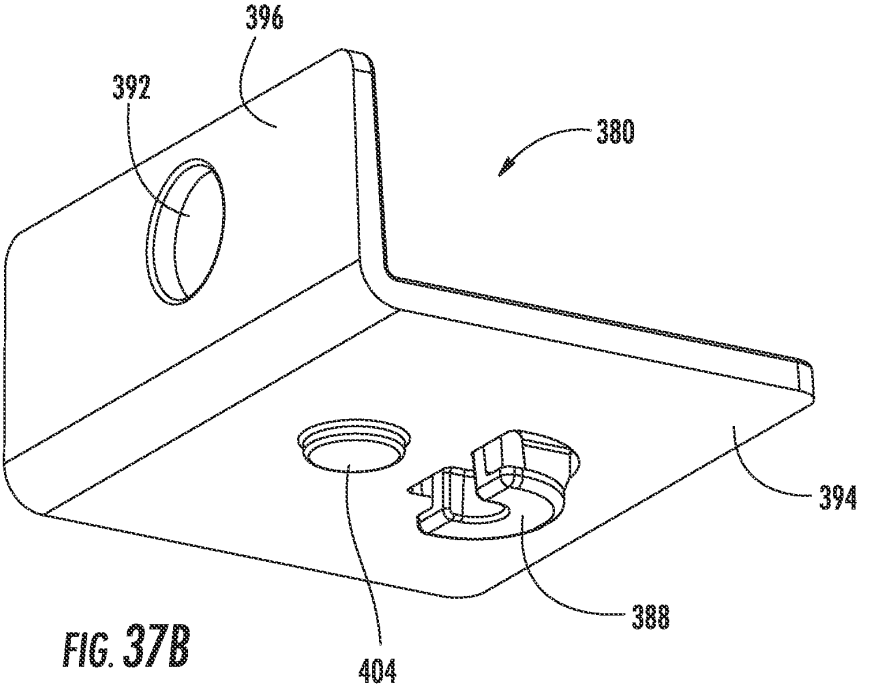

FIG. 37B

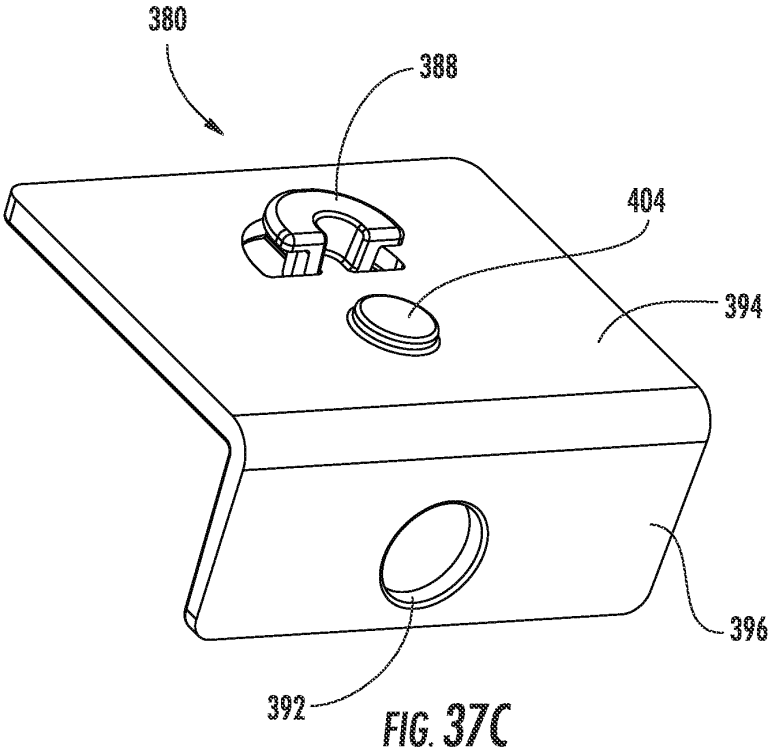

FIG. 37C

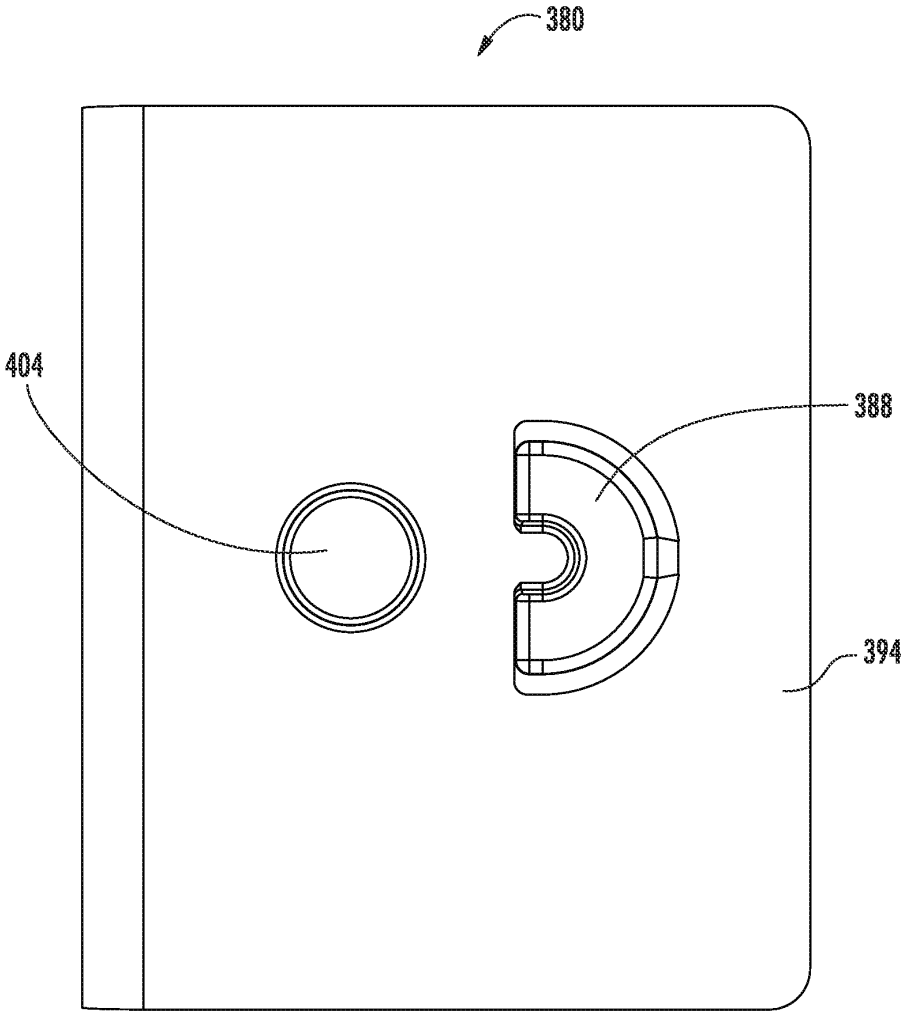

FIG. 37D

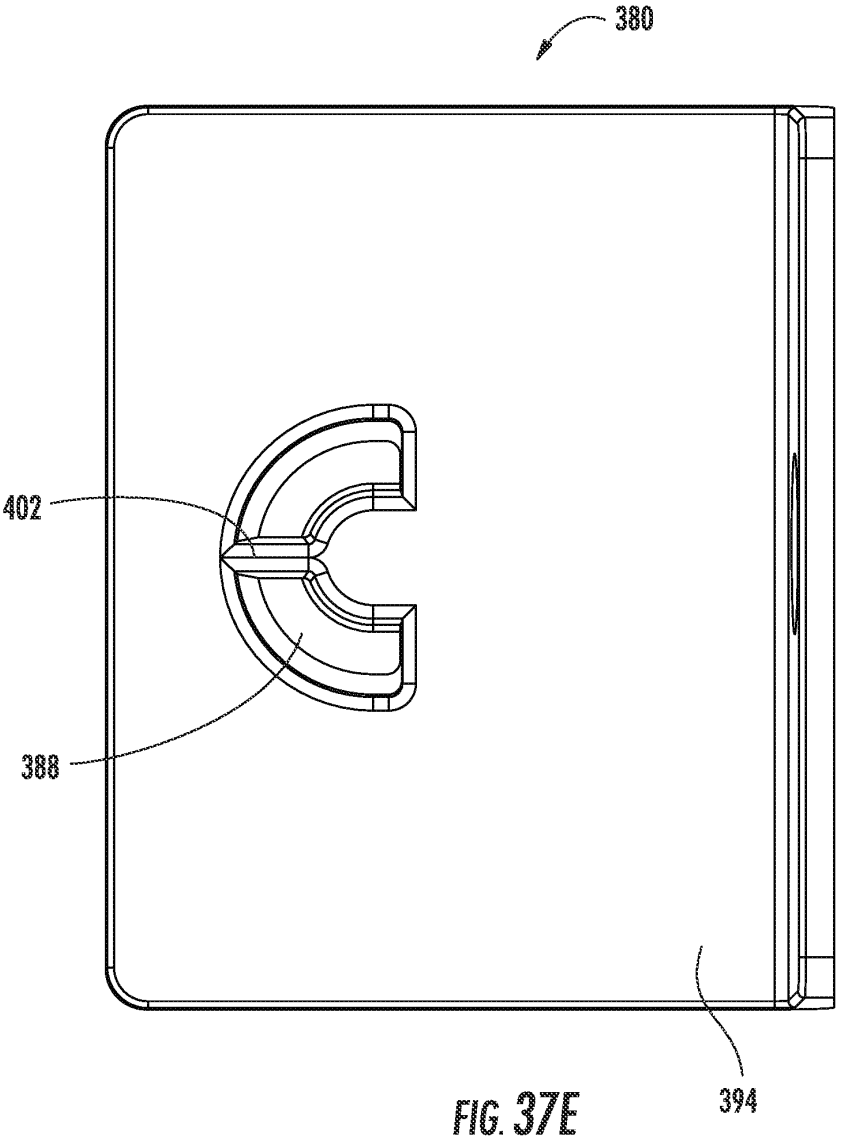

FIG. 37E

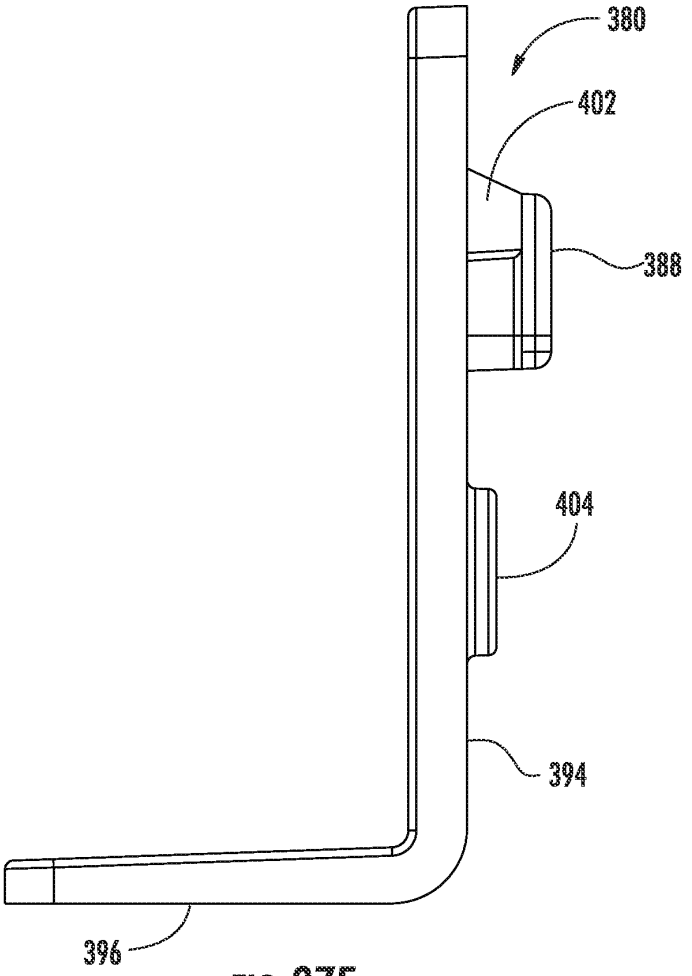

FIG. 37F

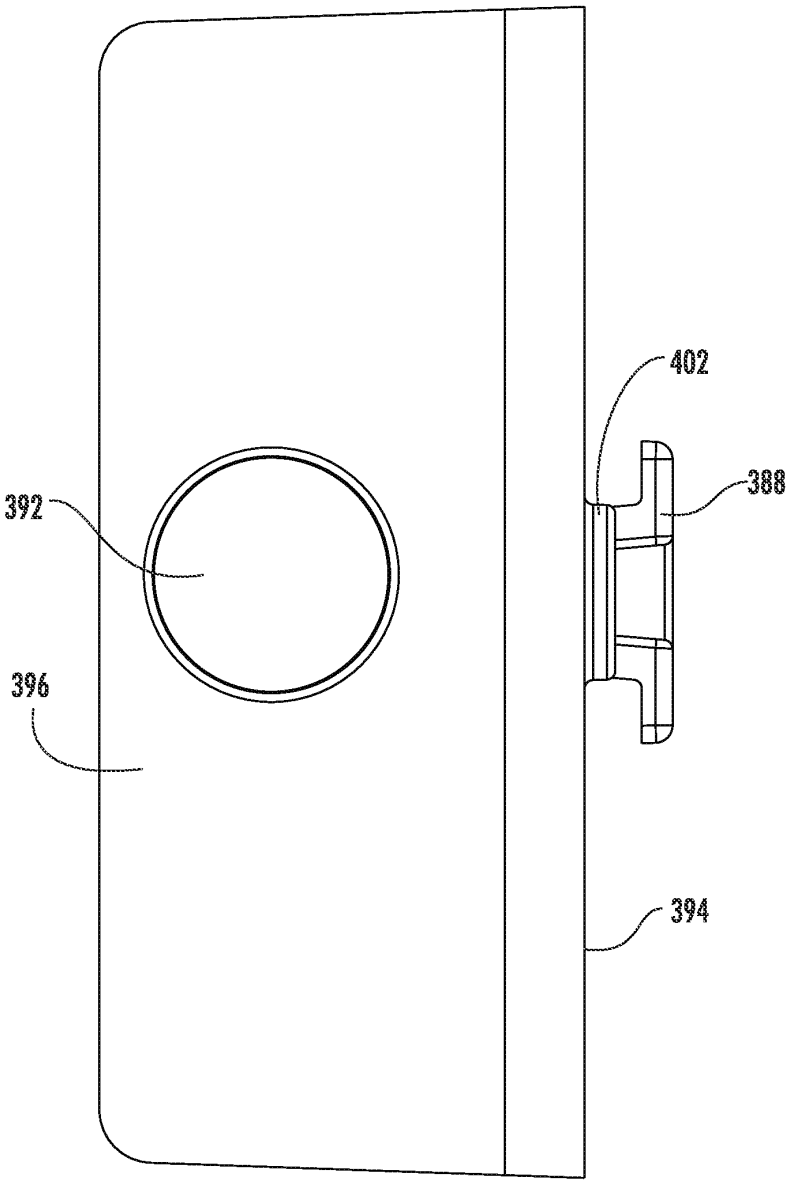

FIG. 37G

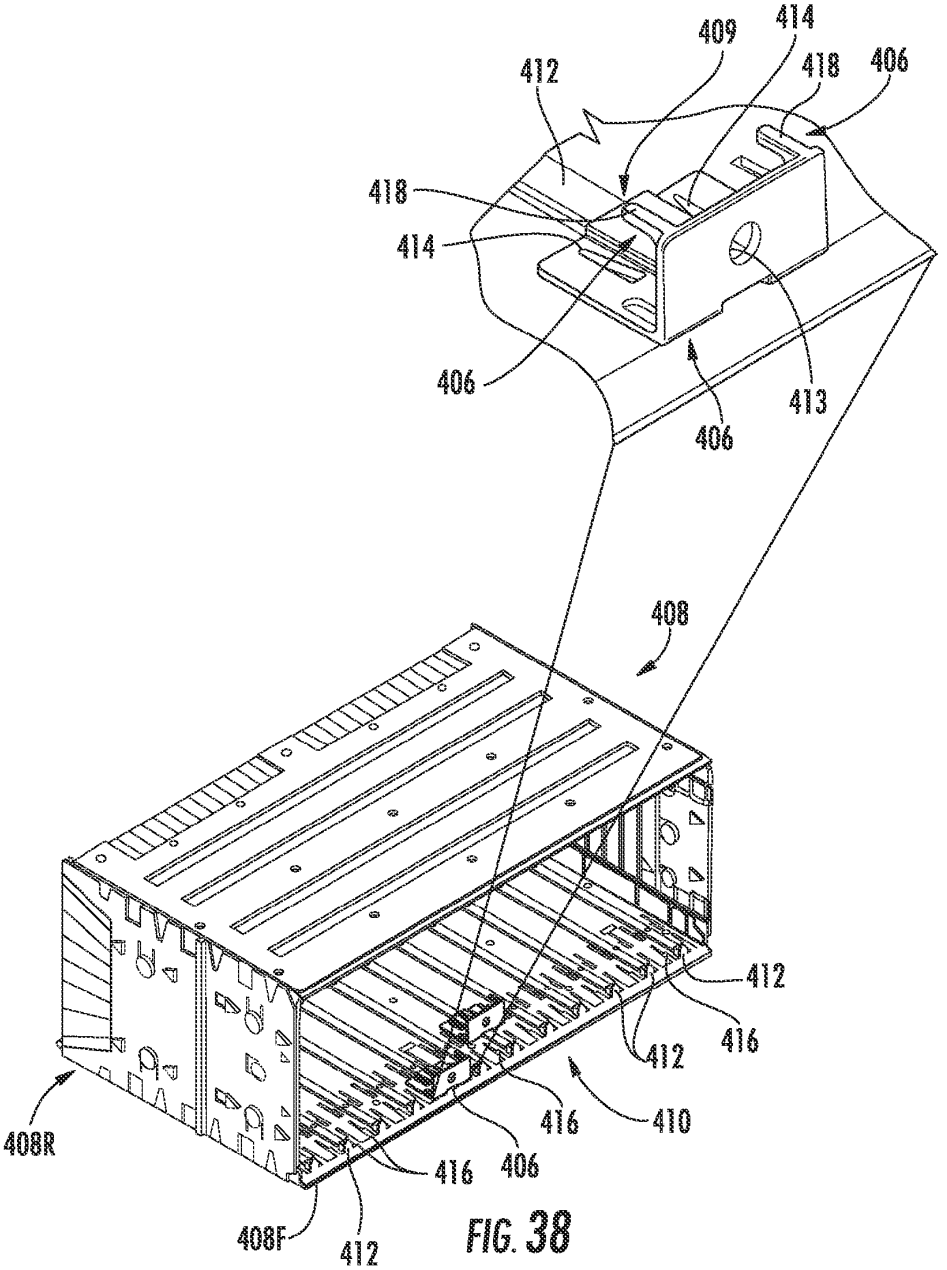
409
414
412
418
406
418
414
406
413
406
408
412
416
412
416
410
408R
416
406
408F
412

FIG. 38

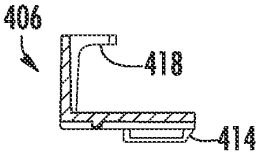

FIG. 39A

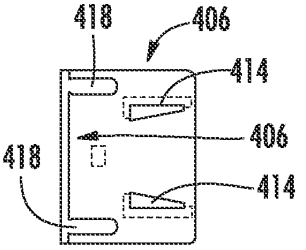

FIG. 39B

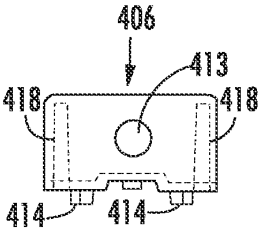

FIG. 39C

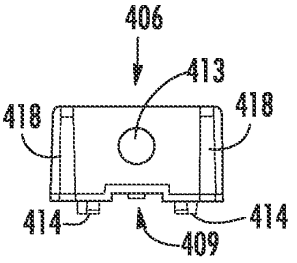

FIG. 39D

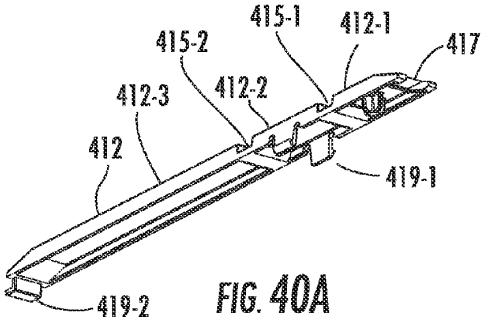

FIG. 40A

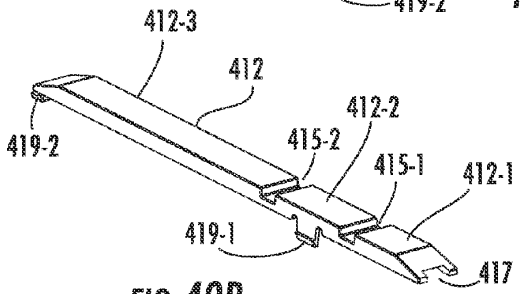

FIG. 40B

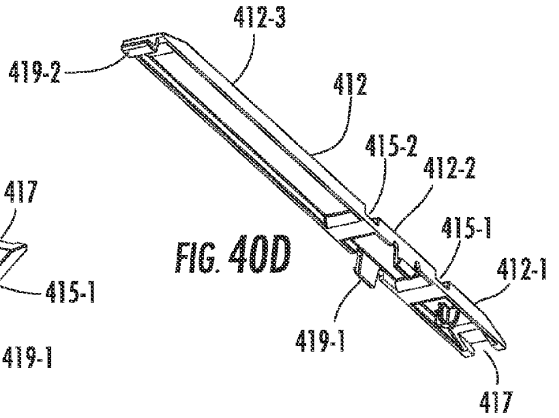

FIG. 40D

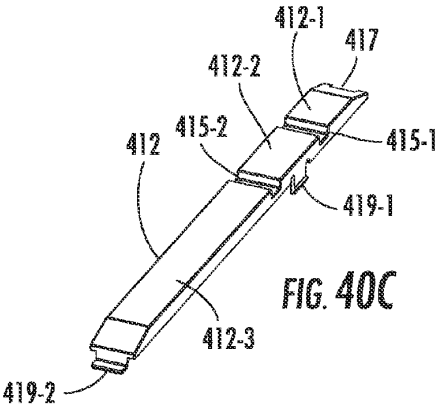

FIG. 40C

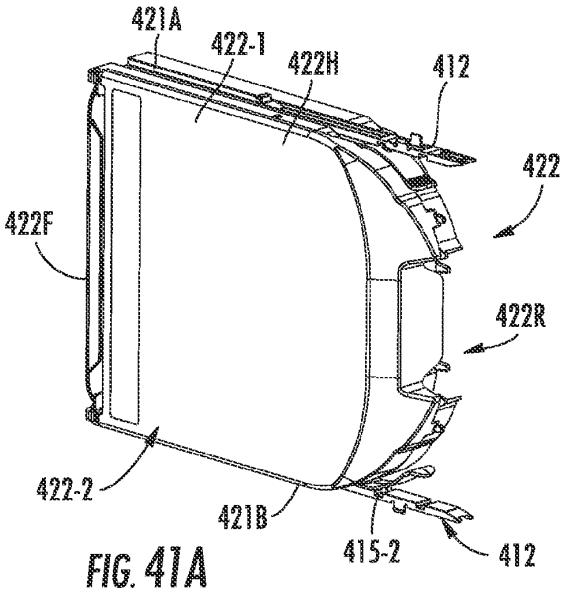

FIG. 41A

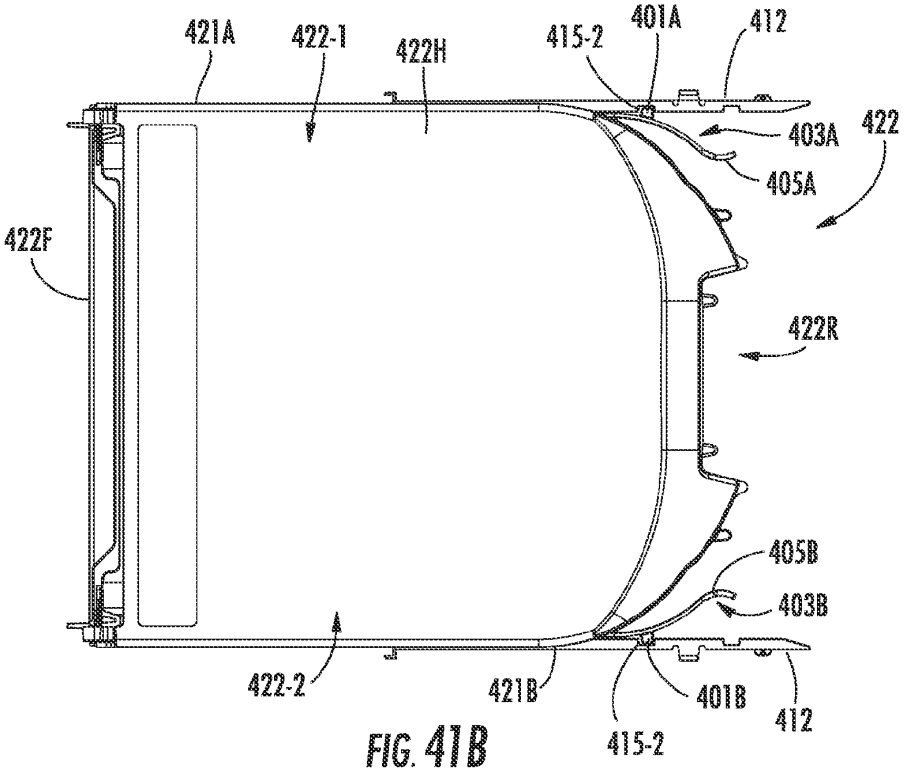

FIG. 41B

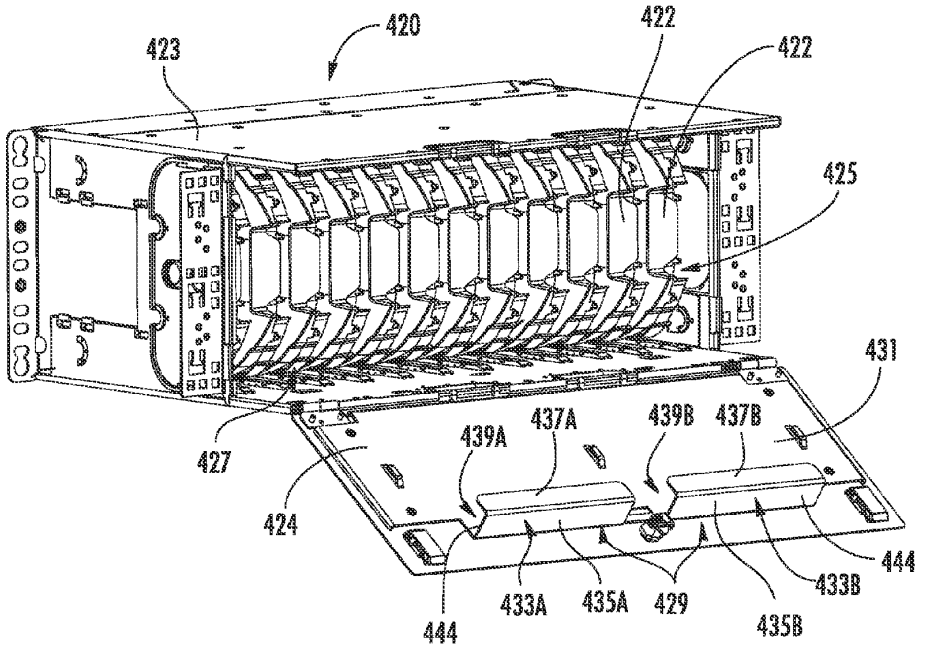
420
423
422
422
425
431
427
439A
437A
439B
437B
424
444
433A
435A
429
433B
444
435B

FIG. 42

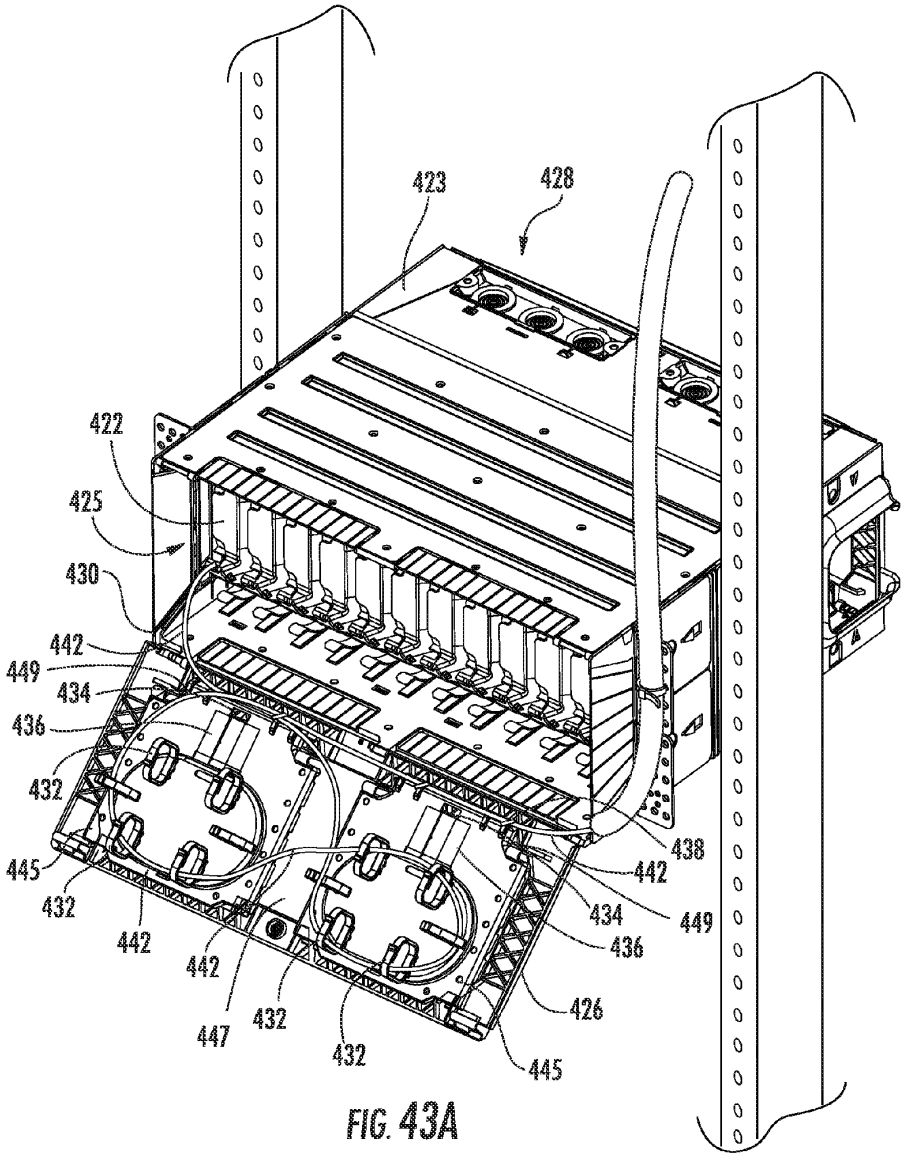
423
428
422
425
430
442
449
434
436
432
445
432
442
442
447
432
432
445
426
436
434
449
442
438

FIG. 43A

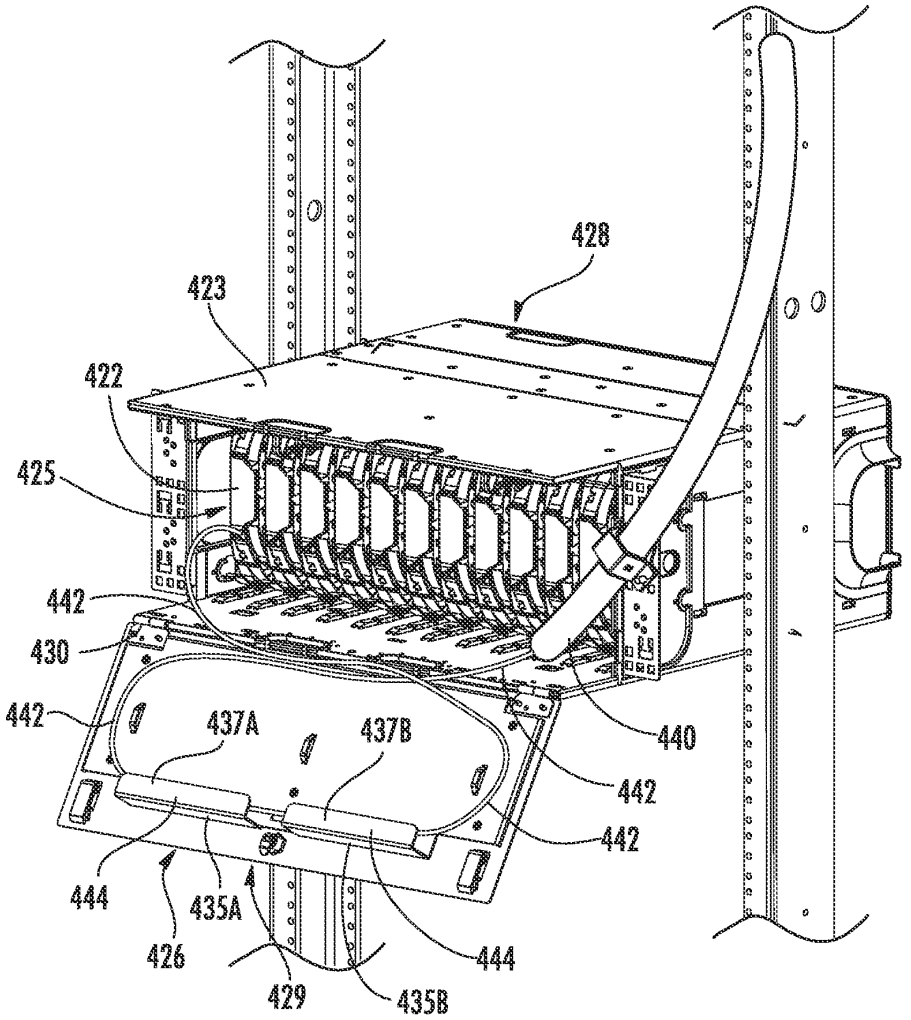
428
423
422
425
442
430
442
437A
437B
440
442
442
444
435A
426
429
444
435B

FIG. 43B

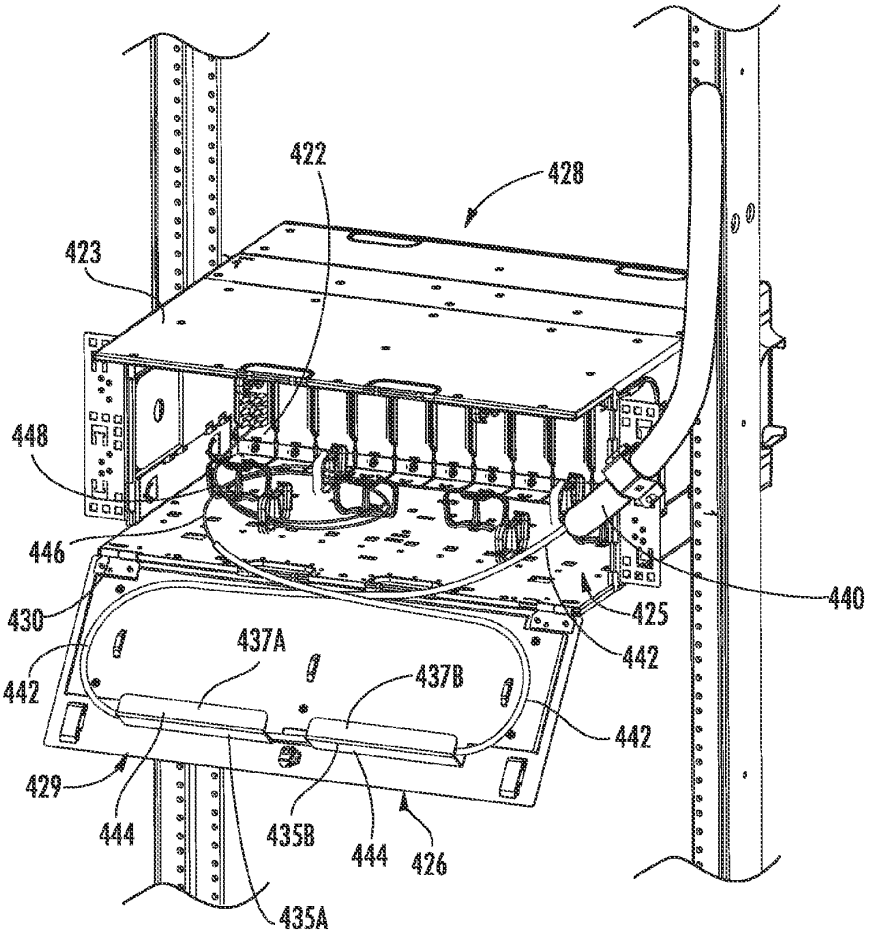
422
428
423
448
446
430
442
437A
437B
442
425
440
442
429
444
435B
444
426
435A

FIG. 43C

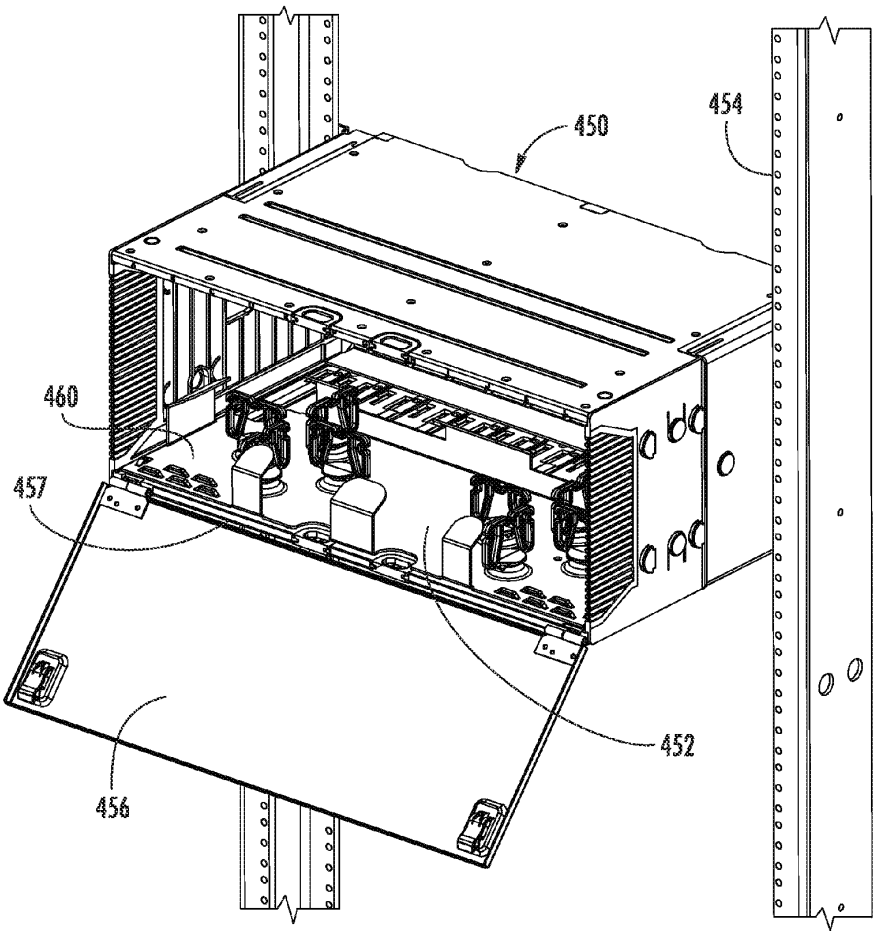

FIG. 44

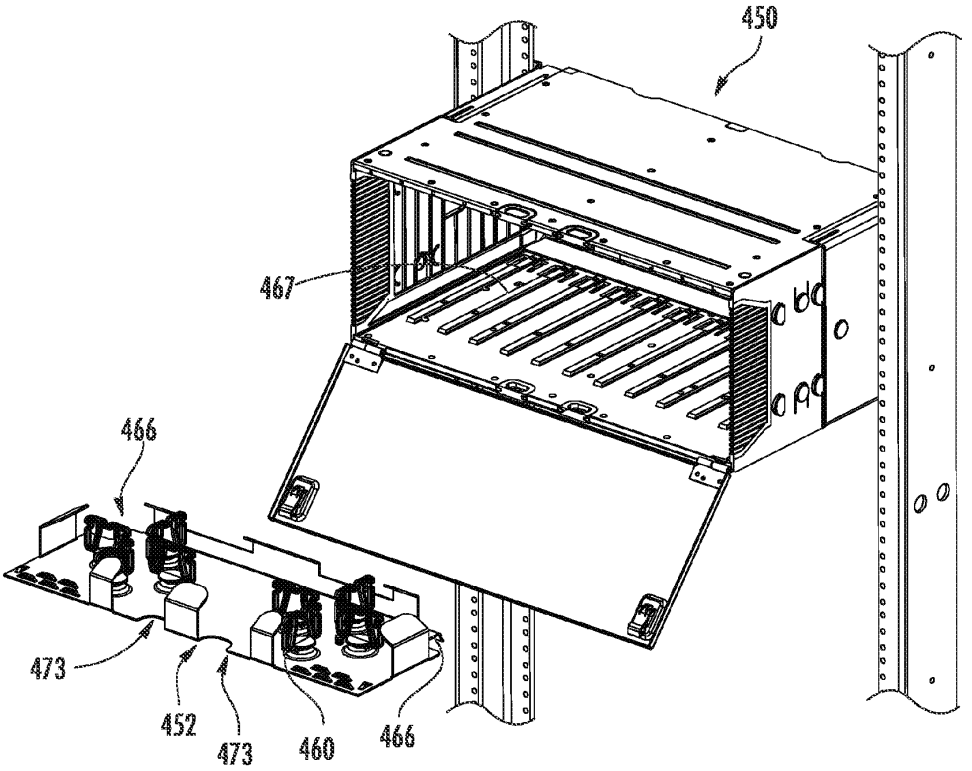

FIG. 45

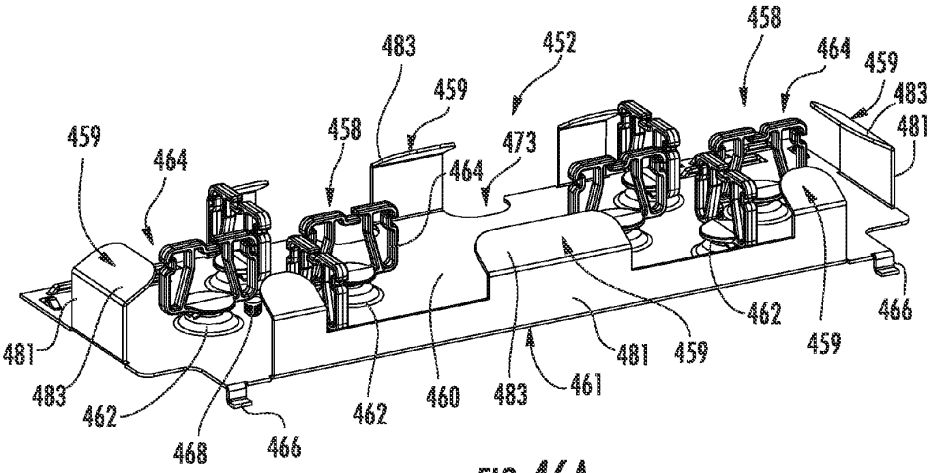

FIG. 46A

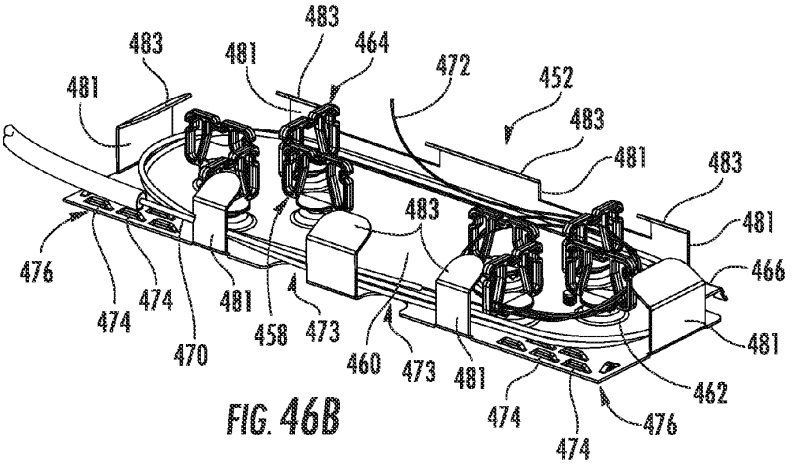

FIG. 46B

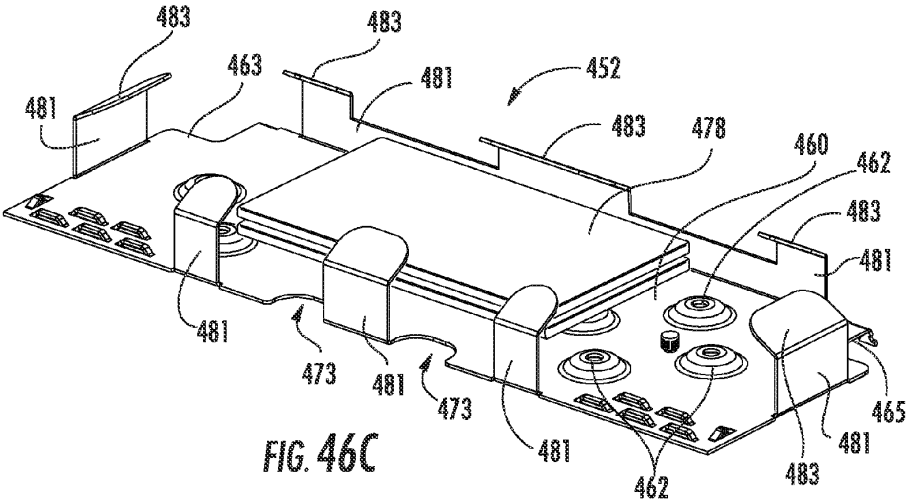

FIG. 46C

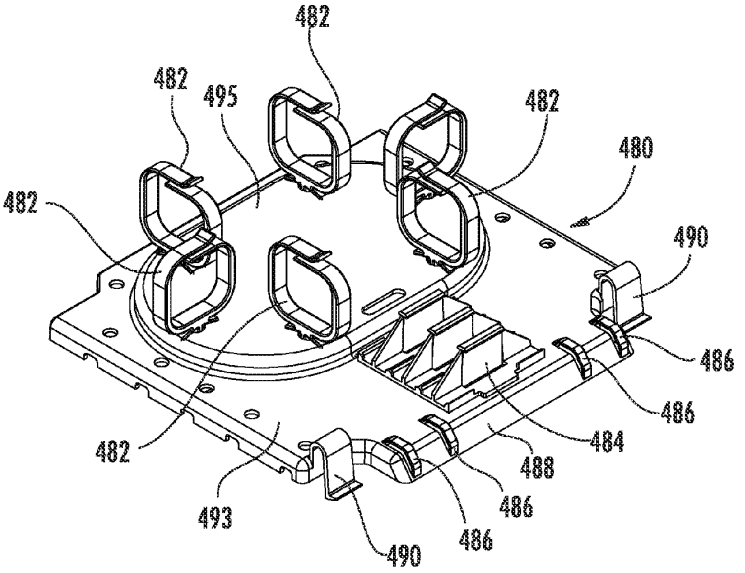

FIG. 46D

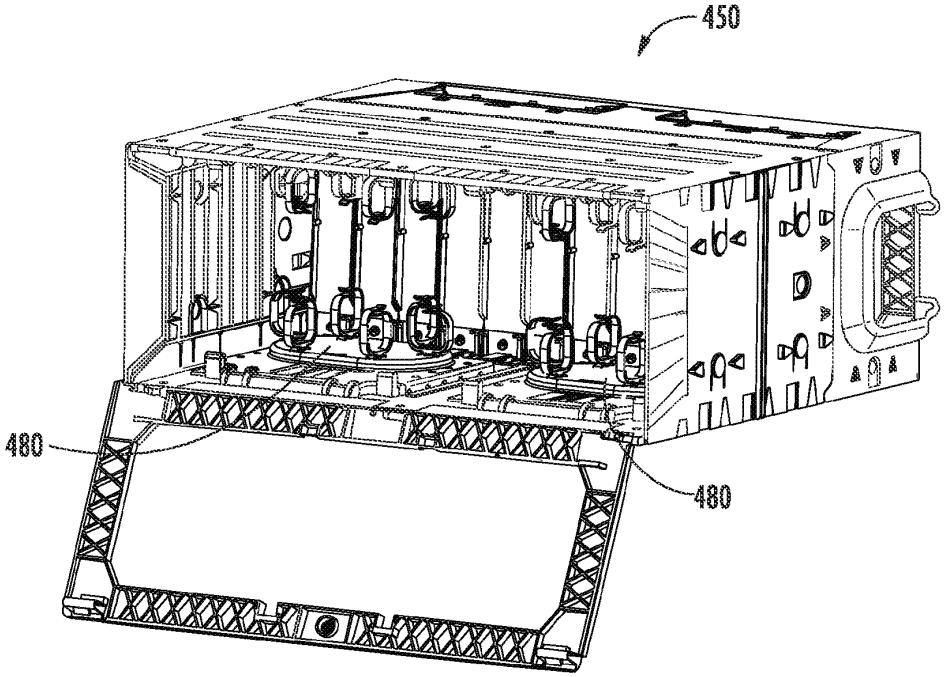

FIG. 47

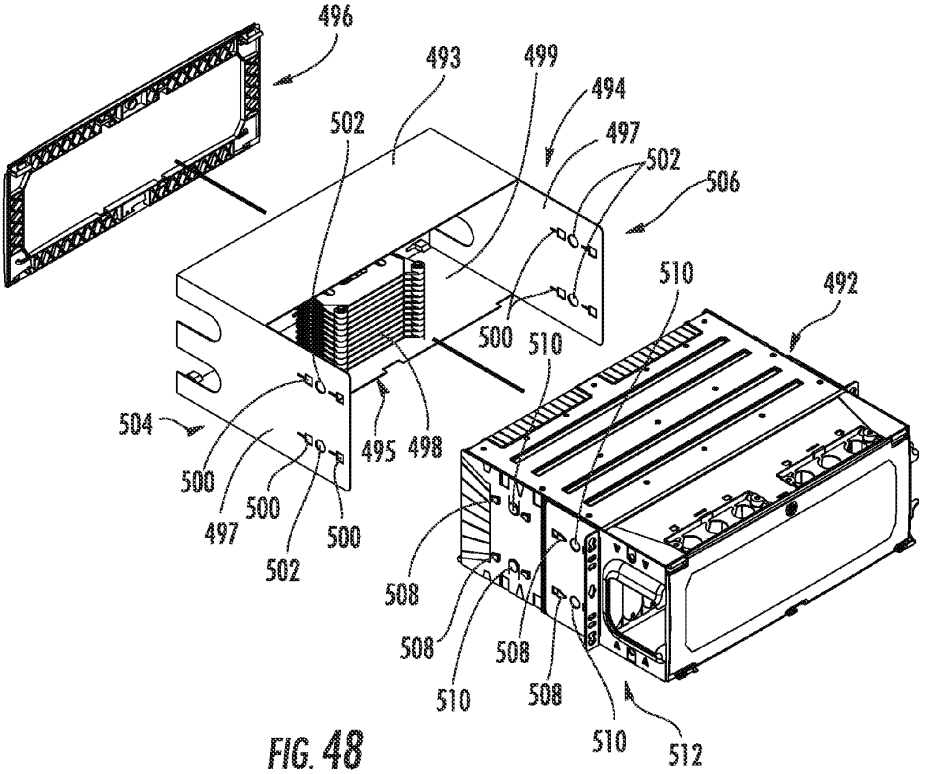
496
493
499
494
497
502
502
506
510
492
500
510
504
495
498
500
500
497
500
502
508
508
508
510
508
510
512

FIG. 48

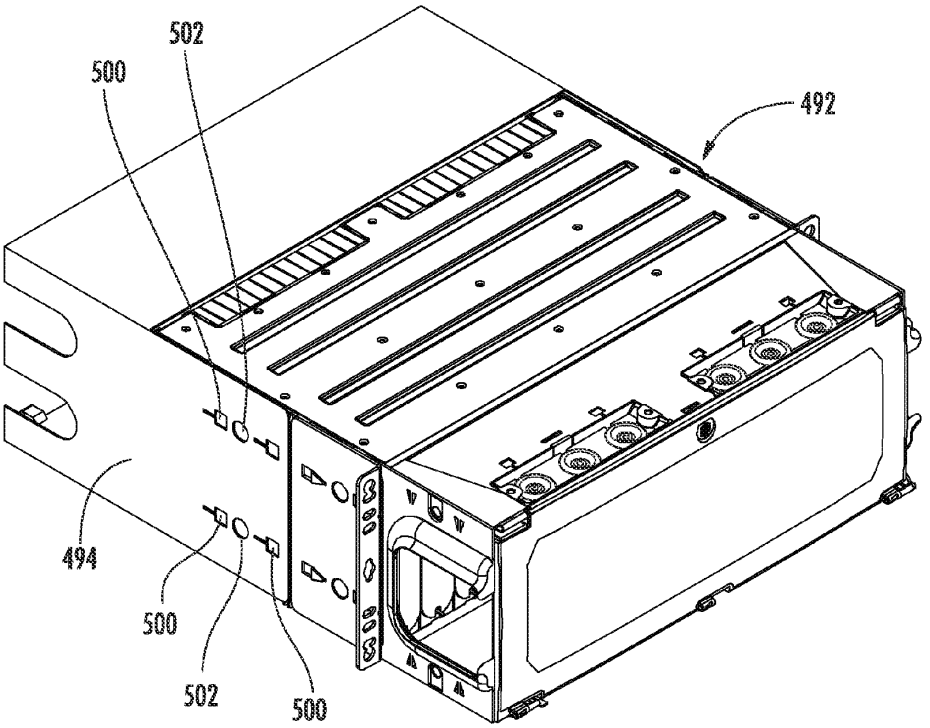

FIG. 49

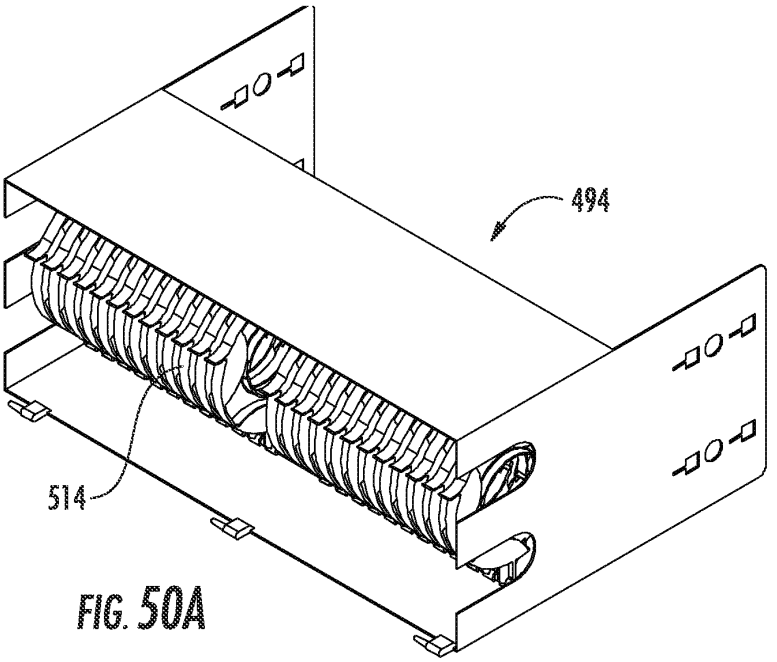

FIG. 50A

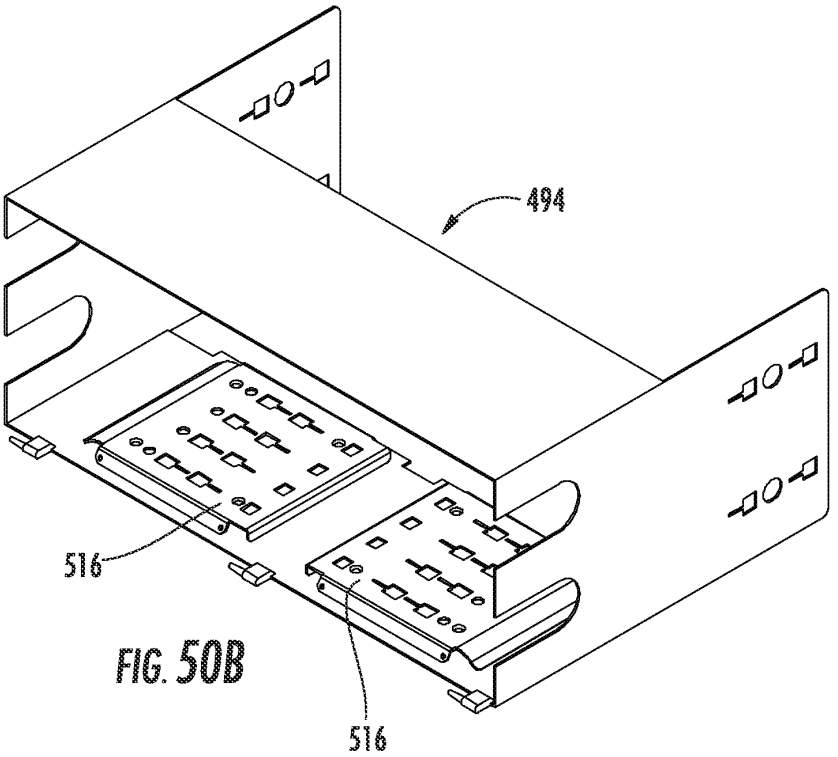

FIG. 50B

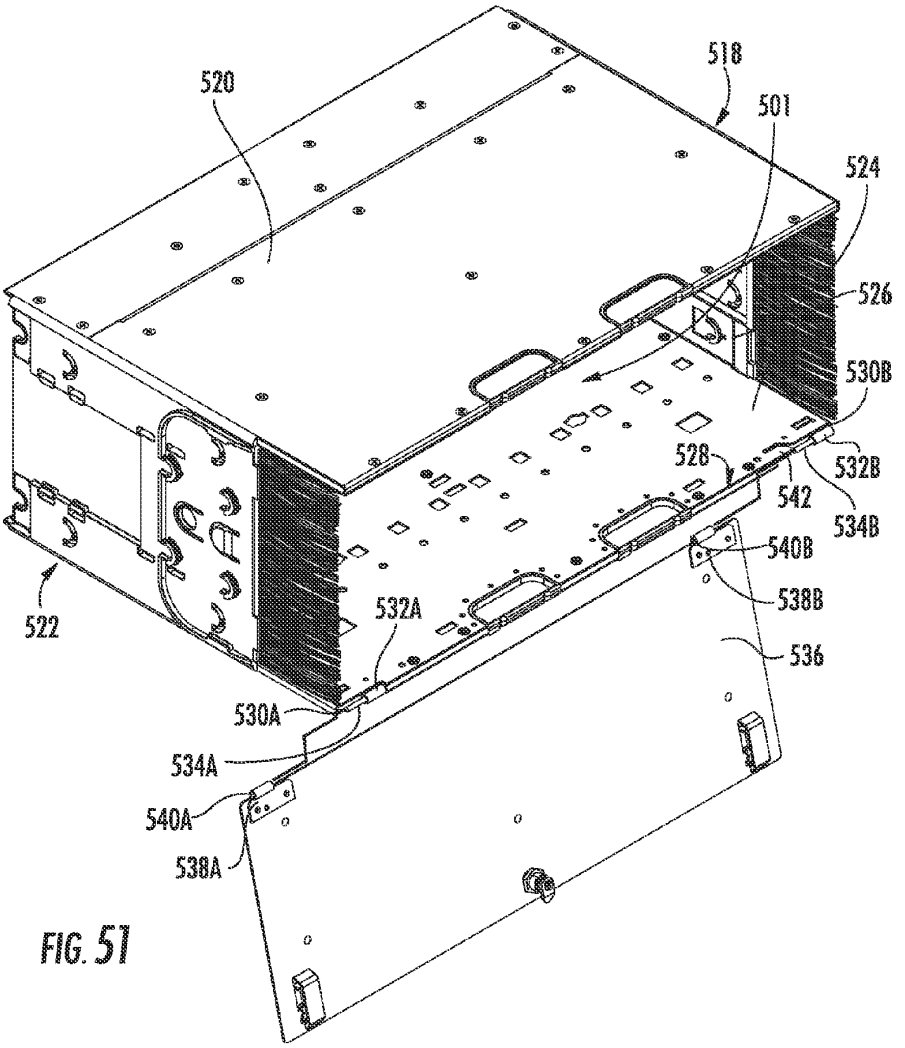
518
520
501
524
526
530B
528
532B
542
534B
540B
538B
536
522
532A
530A
534A
540A
538A

FIG. 51

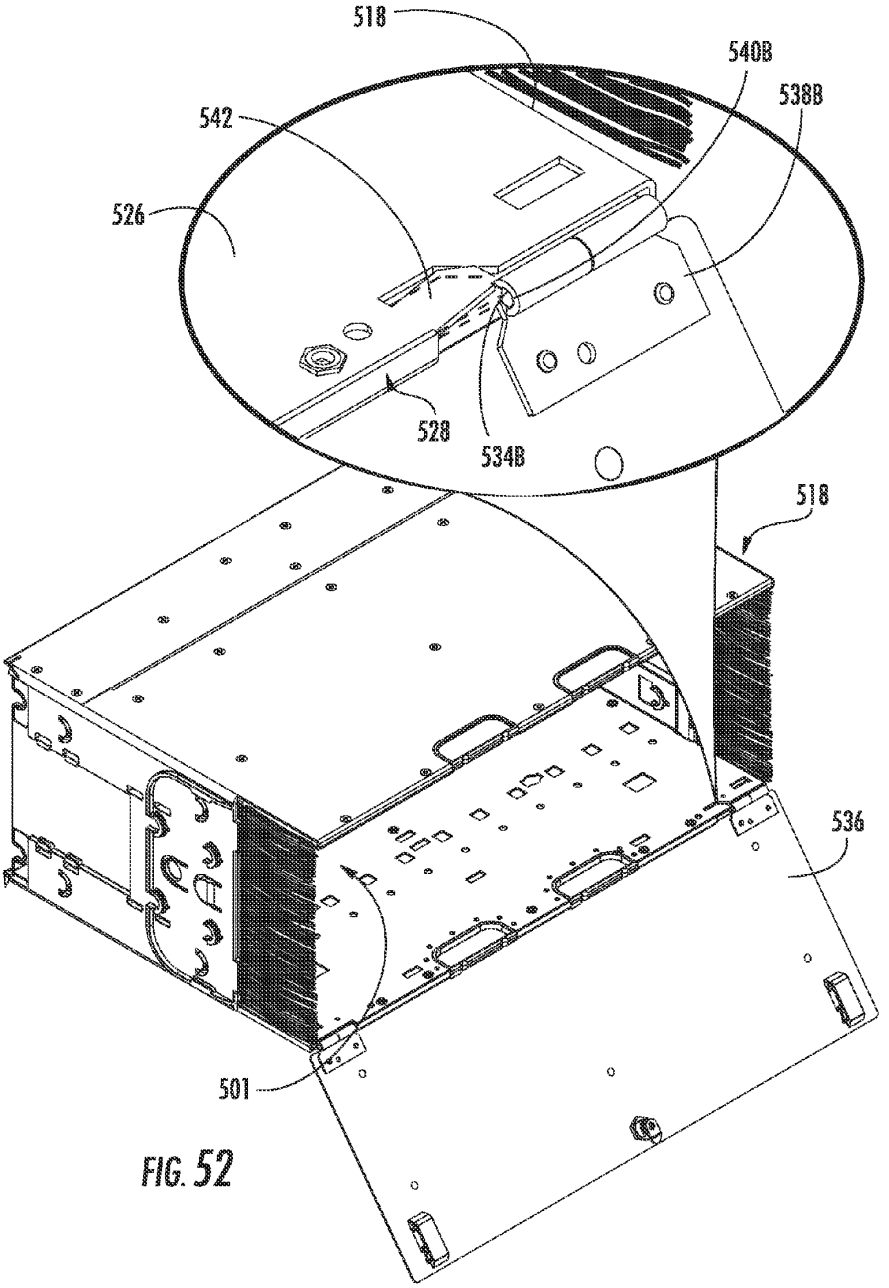

FIG. 52

FIBER MANAGEMENT DEVICES FOR FIBER OPTIC HOUSINGS, AND RELATED COMPONENTS AND METHODS

PRIORITY APPLICATION

The present application claims priority to U.S. Provisional Patent Application Ser. No. 61/332,508, filed May 7, 2010, entitled "Grommet and Routing Clip Assembly" the disclosure of which is relied upon and incorporated herein by reference in its entirety.

RELATED APPLICATIONS

The present application is related to U.S. patent application Ser. No. 12/953,154, filed Nov. 23, 2010, entitled "Fiber Optic Housings Configured For Tool-less Assembly, And Related Components And Methods," the disclosure of which is relied upon and incorporated herein by reference in its entirety.

The present application is also related to U.S. patent application Ser. No. 12/953,101, filed Nov. 23, 2010, entitled "Apparatuses and Related Components And Methods For Expanding Capacity Of Fiber Optic Housings," the disclosure of which is relied upon and incorporated herein by reference in its entirety.

The present application is also related to U.S. patent application Ser. No. 12/953,164, filed Nov. 23, 2010, entitled "Fiber Optic Housings Having A Removable Top, And Related Components and Methods," the disclosure of which is relied upon and incorporated herein by reference in its entirety.

The present application is also related to U.S. patent application Ser. No. 12/953,003, filed Nov. 23, 2010, entitled "Removable Fiber Management Devices For Fiber Optic Housings, and Related Components And Methods," the disclosure of which is relied upon and incorporated herein by reference in its entirety.

The present application is also related to U.S. patent application Ser. No. 12/953,009, filed Nov. 23, 2010, entitled "Door Fiber Management For Fiber Optic Housings, and Related Components And Methods," the disclosure of which is relied upon and incorporated herein by reference in its entirety.

The present application is also related to U.S. patent application Ser. No. 12/952,912, filed Nov. 23, 2010, entitled "Apparatuses And Related Components And Methods For Attachment and Release Of Fiber Optic Housings To And From An Equipment Rack," the disclosure of which is relied upon and incorporated herein by reference in its entirety.

The present application is also related to U.S. patent application Ser. No. 12/953,118, filed Nov. 23, 2010, entitled "Removable Fiber Management Sections For Fiber Optic Housings, and Related Components And Methods," the disclosure of which is relied upon and incorporated herein by reference in its entirety.

The present application is also related to U.S. Provisional Patent Application Ser. No. 61/329,898, filed Apr. 30, 2010, entitled "Rotatable Routing Guide Assembly" the contents of which are relied upon and incorporated herein by reference in their entirety.

The present application is also related to U.S. Provisional Patent Application Ser. No. 61/332,572, filed May 7, 2010, entitled "Fiber Optic Housing" the contents of which are relied upon and incorporated herein by reference in their entirety.

The present application is also related to U.S. Provisional Patent Application Ser. No. 61/332,548, filed May 7, 2010, entitled "Attachment Housing for a Fiber Optic Housing" the contents of which are relied upon and incorporated herein by reference in their entirety.

The present application is also related to U.S. Provisional Patent Application Ser. No. 61/332,529, filed May 7, 2010, entitled "Fiber Optic Management Area in a Fiber Optic Housing" the contents of which are relied upon and incorporated herein by reference in their entirety.

The present application is also related to U.S. Provisional Patent Application Ser. No. 61/332,508, filed May 7, 2010, entitled "Grommet and Routing Clip Assembly" the contents of which are relied upon and incorporated herein by reference in their entirety.

The present application is also related to U.S. Provisional Patent Application Ser. No. 61/329,925, filed Apr. 30, 2010, entitled "Fiber Optic Housing Adapted to Accommodate Both Modules and Panels," the disclosure of which is relied upon and incorporated herein by reference in its entirety.

The present application is also related to U.S. patent application Ser. No. 12/940,585, filed Nov. 5, 2010, entitled "Fiber Optic Housings Configured to Accommodate Fiber Optic Modules/Cassettes and Fiber Optic Panels, and Related Components and Methods," the disclosure of which is relied upon and incorporated herein by reference in its entirety.

The present application is related to U.S. Provisional Patent Application Ser. No. 61/329,948, filed Apr. 30, 2010, entitled "Stackable Shelf for a Fiber Optic Housing," the disclosure of which is relied upon and incorporated herein by reference in its entirety.

The present application is also related to U.S. patent application Ser. No. 12/940,699, filed Nov. 5, 2010, entitled "Stackable Shelves for a Fiber Optic Housing, and Related Components and Methods," the disclosure of which is relied upon and incorporated herein by reference in its entirety.

The present application is also related to U.S. patent application Ser. No. 61/180,331, filed May 21, 2009, entitled "Fiber Optic Equipment Guides and Rails Configured With Stopping Position(s), and Related Equipment," the disclosure of which is relied upon and incorporated herein by reference in its entirety.

The present application is also related to U.S. patent application Ser. No. 12/576,806, filed Oct. 9, 2009, entitled "Fiber Optic Equipment Guides and Rails Configured With Stopping Position(s), and Related Equipment and Methods," the disclosure of which is relied upon and incorporated herein by reference in its entirety.

BACKGROUND

1. Field of the Disclosure

The technology of the disclosure relates to fiber optic housings for supporting fiber optic equipment, including but not limited to fiber optic equipment that provides interconnect and/or cross-connect capabilities between optical components and opto-electrical components using fiber optic cables, and more particularly to fiber management devices that can be provided in the fiber optic housings to assist in optical fiber management.

2. Technical Background

Benefits of optical fiber include extremely wide bandwidth and low noise operation. Because of these advantages, optical fiber is increasingly being used for a variety of applications, including but not limited to broadband voice, video, and data transmission. Fiber optic networks employing optical fiber are being developed and used to deliver voice, video, and data

transmissions to subscribers over both private and public networks. These fiber optic networks often include separated connection points linking optical fibers to provide a contiguous fiber optic link from one connection point to another connection point. In this regard, fiber optic equipment is located in data distribution centers or central offices to support interconnections.

The fiber optic equipment is customized based on the application need. The fiber optic equipment is typically included in housings designed to support the fiber optic equipment, which are mounted in equipment racks to optimize use of space. One example of such fiber optic equipment is a fiber optic module/cassette. A fiber optic module/cassette is designed to provide cable-to-cable fiber optic connections and manage the polarity of fiber optic cable connections. A fiber optic module or cassette is mounted to a chassis or housing that is specifically designed to support fiber optic modules and cassettes. Another example of such fiber optic equipment is a fiber optic panel (also referred to as a "patch panel"). A fiber optic panel is designed to provide connection or termination points for optical fiber. A fiber optic panel typically includes fiber optic adapters that are configured to receive fiber optic connectors connected to the optical fiber to be connected or terminated. A fiber optic panel is typically mounted to a chassis or housing that is specifically designed to support fiber optic panels.

Due to the volume of optical fiber connections that may be made to these various types of fiber optic equipment that can be supported in a fiber optic housing, it may be important to provide fiber management. For example, fiber management can be provided to route optical fibers to and from a fiber optic housing in an orderly fashion. In this manner, optical fibers can be accessed and connections made and/or reconfigured to the fiber optic equipment supported in the fiber optic housing. Fiber management can also be provided to include slack storage for storing additional lengths of slack in optical fiber and fiber optic cable in case fiber optic connections made by the optical fiber and fiber optic cables are moved and/or reconfigured to require additional length. However, fiber management devices can consume internal volume of a fiber optic housing that can make access to fiber optic equipment supported therein more difficult. Fiber optic management devices can also consume valuable space in the fiber optic housing that can reduce the capacity of the housing to support fiber optic equipment, thus reducing the fiber optic connection capacity of the fiber optic housing.

SUMMARY OF THE DETAILED DESCRIPTION

Embodiments disclosed in the detailed description include fiber management sections for fiber optic housings, and related components and methods. In one embodiment, a fiber management device is provided. The fiber management device comprises a base and at least one fiber management component attached to the base and configured to manage one or more optical fibers. At least one opening is disposed in the base and configured to route one or more optical fibers from the base. The fiber management component may be a routing guide configured to route the one or more optical fibers as a non-limiting example.

In another embodiment, a fiber optic housing is provided. The fiber optic housing comprises an enclosure defining at least one interior chamber configured to support fiber optic equipment. The fiber optic housing also comprises a fiber management device disposed in the enclosure. The fiber management device comprises a base and at least one fiber management component attached to the base and configured to manage one or more optical fibers connected to the fiber optic equipment. The fiber management device also comprises at least one opening disposed in the base and configured to route the one or more optical fibers from the enclosure. The fiber management device may be disposed on a side or within the enclosure and may be removable from the enclosure.

In another embodiment, a method of managing optical fibers in a fiber optic housing is provided. The method comprises routing one or more optical fibers from fiber optic equipment disposed in an enclosure to at least one fiber management component disposed in a fiber management device disposed in the enclosure. The fiber management device comprises a base and the at least one fiber management component attached to the base and configured to manage one or more optical fibers connected to the fiber optic equipment. The fiber management device also comprises at least one opening disposed in the base and configured to route the one or more optical fibers from the enclosure.

Additional features and advantages will be set forth in the detailed description which follows, and in part will be readily apparent to those skilled in the art from that description or recognized by practicing the invention as described herein, including the detailed description that follows, the claims, as well as the appended drawings.

It is to be understood that both the foregoing general description and the following detailed description present embodiments, and are intended to provide an overview or framework for understanding the nature and character of the disclosure. The accompanying drawings are included to provide a further understanding, and are incorporated into and constitute a part of this specification. The drawings illustrate various embodiments, and together with the description serve to explain the principles and operation of the concepts disclosed.

BRIEF DESCRIPTION OF THE FIGURES

FIG. **1**A is a front perspective view of an exemplary fiber optic housing being mounted to an exemplary equipment rack from the front of the equipment rack;

FIG. **1**B is a front perspective view of the fiber optic housing in FIG. **1**A after being mounted to the equipment rack in FIG. **1**A from the front of the equipment rack;

FIG. **1**C is a front perspective view of the fiber optic housing of FIG. **1**A being mounted to the equipment rack in FIG. **1**A from the rear of the equipment rack;

FIG. **1**D is a front perspective view of the fiber optic housing in FIG. **1**A after being mounted to the equipment rack in FIG. **1**A from the rear of the equipment rack;

FIG. **1**E is a front perspective view of an alternate exemplary fiber optic housing being mounted to an exemplary equipment rack from the front of the equipment rack;

FIG. **1**F is a front perspective view of the fiber optic housing in FIG. **1**E after being mounted to the equipment rack in FIG. **1**E;

FIG. **1**G is a rear perspective view of the fiber optic housing in FIG. **1**E being removed from the equipment rack in FIG. **1**E;

FIG. **2** is a rear view of the fiber optic housing in FIG. **1**E mounted in the equipment rack in FIG. **1**E with a close-up view of exemplary snap features disposed on a side of the fiber optic housing;

FIG. **3**A is a front perspective view of another exemplary fiber optic housing mounted in an exemplary equipment rack;

FIG. **3**B is a rear perspective view of the fiber optic housing in FIG. **3**A illustrating an exemplary release tab for removing the fiber optic housing from the equipment rack in FIG. **3**A;

FIG. **3**C is a rear perspective view of the fiber optic housing of FIG. **3**A being removed from the equipment rack in FIG. **3**A;

FIG. **4** is a detail view of an exemplary mounting bracket configured to be removably attached to a side of the fiber optic housing in FIGS. **3**A-**3**C;

FIG. **5** is a front perspective view of the fiber optic housing in FIGS. **3**A-**3**C being reinstalled into an equipment rack;

FIG. **6** is a front perspective view of the fiber optic housing in FIGS. **1**A-**1**D including an exemplary mounting bracket snap attachment feature;

FIG. **7** is a front perspective view of an exemplary mounting bracket configured to be removably attached to a side of an exemplary fiber optic housing;

FIG. **8** is a cut section of the mounting bracket and side of the fiber optic housing illustrated in FIG. **7**;

FIG. **9** is a rear perspective view of an exemplary fiber optic housing including an exemplary strain relief bracket;

FIG. **10** is a side perspective view of an exemplary fiber optic housing including an exemplary strain relief bracket;

FIGS. **11**A and **11**B are a side view of the strain relief bracket in FIG. **10** mounted to the fiber optic housing in FIG. **10** and a close-up view of the fiber optic housing and strain relief bracket illustrated in FIG. **10**, respectively;

FIG. **12** is a cut section of the external strain relief bracket and a side of the fiber optic housing in FIGS. **10**, **11**A, and **11**B;

FIG. **13** is a partial, rear perspective view of the fiber optic housing in FIG. **9** illustrating exemplary strain relief brackets with exemplary fiber optic cables tied to the strain relief brackets;

FIG. **14** is a front perspective view of an exemplary fiber optic housing with a front door closed;

FIG. **15** illustrates exploded and assembled front perspective views of exemplary components of an exemplary fiber optic housing;

FIG. **16** illustrates an exploded front perspective view of exemplary components of an exemplary fiber optic housing;

FIG. **17**A is an assembled front perspective view of the fiber optic housing in FIG. **16**;

FIG. **17**B is an assembled front perspective view of the fiber optic housing in FIG. **17**A with a cover plate;

FIG. **18** is a close-up front perspective view illustrating details of how an inside top panel of the fiber optic housing in FIGS. **17**A and **17**B is connected to a side panel of the fiber optic housing;

FIG. **19**A is a rear perspective view of an exemplary fiber optic housing having an exemplary removable top;

FIG. **19**B is a rear perspective view of the fiber optic housing of FIG. **19**A after the removable top is removed;

FIG. **19**C illustrates an exemplary release tab in the fiber optic housing in FIGS. **19**A and **19**B;

FIG. **20**A illustrates an exploded front perspective view of an exemplary removable top;

FIG. **20**B illustrates an assembled front perspective view of the fiber optic housing in FIG. **17**B as the removable top in FIG. **20**A is being installed into the fiber optic housing;

FIG. **21**A is a side view section cut of an exemplary side panel of an exemplary fiber optic housing with the removable top in FIGS. **19**A, **20**A, and **20**B installed;

FIG. **21**B is a side view of an exemplary gap in the removable top in FIGS. **19**A, **20**A, and **20**B configured to receive the side panel of the fiber optic housing;

FIG. **22** is a front perspective view of an exemplary fiber optic housing including exemplary openings disposed in the sides of the fiber optic housing and rubber entry grommets disposed in the fiber optic housing, both for fiber management;

FIG. **23** is a partial, front perspective view of an exemplary fiber optic housing in FIG. **22**, illustrating exemplary molded in flexible edge protection disposed in the fiber optic housing;

FIG. **24** illustrates a front perspective view of an exemplary fiber optic housing and perspective views of exemplary removable front section versions attached to the fiber optic housing to provide additional capacity for fiber management devices;

FIG. **25** illustrates an exploded, front perspective view of an exemplary removable front section in FIG. **24** configured to be attached to the fiber optic housing in FIG. **24**;

FIG. **26**A illustrates a front perspective view of the removable front section in FIG. **25** with a door closed against the removable front section;

FIG. **26**B illustrates a front perspective view of the removable front section in FIGS. **25** and **26**A with the door in FIG. **26**A opened;

FIG. **26**C illustrates a top perspective view of the removable front section in FIGS. **25**, **26**A, and **26**B with the door removed;

FIG. **26**D illustrates a front perspective view of the removable front section in FIGS. **25** and **26**A-C with the door removed;

FIG. **27** illustrates a front perspective view of an exemplary removable front section being attached to an exemplary fiber optic housing;

FIG. **28** illustrates a front perspective view of an exemplary removable front section in FIGS. **25** and **26**A-C attached to an exemplary fiber optic housing with exemplary fiber optic jumpers being routed out of sides of the removable front section;

FIG. **29** is a front perspective view of an exemplary fiber optic housing illustrating an exemplary removable front section having a plurality of exemplary removable front jumper management devices with grommets;

FIG. **30** is a front perspective view of the fiber optic housing in FIG. **29** illustrating exemplary fiber management of exemplary optical fiber jumpers using the front jumper management device with pass-through grommets in FIG. **29**;

FIG. **31** is a front perspective view of the front jumper management device with the pass-through grommets in FIGS. **29** and **30**;

FIG. **32** illustrates how exemplary front jumper management devices with pass-through grommets may be mounted on their sides to create horizontal fiber management outside an exemplary fiber optic housing;

FIG. **33** illustrates how an exemplary front jumper management device with pass-through grommets may be mounted in an exemplary fiber optic housing in place of a fiber optic panel to allow for fiber management;

FIG. **34** is a perspective view of an exemplary fiber optic housing configured to support exemplary fiber optic modules;

FIG. **35**A is a front perspective view illustrating where and how an exemplary removable panel clip is attached to a bottom panel of an exemplary fiber optic housing;

FIG. **35**B is a close-up view of the removable panel clip in FIG. **35**A being attached to the bottom panel of the fiber optic housing;

FIG. **35**C is a cut section of the removable panel clip in FIGS. **35**A and **35**B being attached to the bottom panel of the fiber optic housing;

FIG. **36**A is a front perspective view of exemplary fiber optic panels being mounted in the fiber optic housing in FIGS. **35**A-C by being attached to the removable panel clips illustrated in FIGS. **35**A-C;

FIG. **36**B is a front perspective view of the fiber optic housing in FIG. **36**A fully loaded with fiber optic panels attached to removable panel clips;

FIGS. **37**A-**37**G are top perspective, bottom perspective, rotated perspective, right side, left side, top, and front views, respectively, of a removable panel clip to be used with the fiber optic housing in FIGS. **34**, **35**A, **36**A, and **36**B;

FIG. **38** is a perspective view of an alternate exemplary removable panel clip installed in an exemplary fiber optic housing to enable the fiber optic housing to interchangeably support exemplary fiber optic panels and fiber optic modules;

FIGS. **39**A-**39**D are bottom, side, front, and back views, respectively, of the removable panel clip in FIG. **38**;

FIGS. **40**A-**40**D illustrate various views of exemplary rails to be used in mounting exemplary fiber optic splice cassettes in an exemplary fiber optic housing;

FIGS. **41**A and **41**B are front perspective and side views, respectively, of an exemplary fiber optic splice cassette that may be mounted on an exemplary rail in an exemplary fiber optic housing;

FIG. **42** is a rear view of an exemplary fiber optic housing with the rear door opened that is fully loaded with exemplary fiber optic splice cassettes attached to rails;

FIG. **43**A is a rear perspective view of an exemplary fiber optic housing mounted in an exemplary equipment rack illustrating exemplary fiber slack storage and fiber management on a rear door of the fiber optic housing;

FIG. **43**B is a rear perspective view of an exemplary fiber optic housing mounted in an exemplary equipment rack illustrating an alternate exemplary fiber slack storage and management scheme on a rear door of the fiber optic housing having exemplary fiber optic splice cassettes;

FIG. **43**C is a rear perspective view of an exemplary fiber optic housing mounted in an exemplary equipment rack illustrating an alternate exemplary fiber slack storage and management scheme on a rear door of the fiber optic housing having exemplary fiber optic panels;

FIG. **44** is a rear perspective view of an exemplary fiber optic housing mounted in an exemplary equipment rack with an exemplary removable fiber management device mounted in the fiber optic housing;

FIG. **45** is a rear perspective view of the fiber optic housing mounted in the equipment rack in FIG. **44** with the removable fiber management device in FIG. **44** removed from the fiber optic housing;

FIG. **46**A is a front perspective view of the removable fiber management device in FIG. **44** with exemplary routing clips;

FIG. **46**B is a front perspective view of the removable fiber management device in FIG. **46**A illustrating an exemplary fiber optic cable routing with an exemplary buffer tube and optical fiber;

FIG. **46**C is a top front perspective view of the removable fiber management device in FIG. **44** with exemplary optical fiber splice trays;

FIG. **46**D is a front perspective view of an alternate exemplary removable fiber management device;

FIG. **47** is a rear perspective view of an exemplary fiber optic housing illustrating optical fiber storage using the removable fiber management devices in FIGS. **44**-**46**D;

FIG. **48** is a front perspective view of an exemplary fiber optic housing illustrating an expandable attachment housing separated from the fiber optic housing;

FIG. **49** is a front perspective view of the fiber optic housing in FIG. **48** illustrating the expandable attachment housing in FIG. **48** attached to the fiber optic housing;

FIG. **50**A is a rear, perspective view of the expandable attachment housing in FIGS. **48** and **49** with exemplary jumper slack storage;

FIG. **50**B is a rear, perspective view of the expandable attachment housing in FIGS. **48** and **49** with exemplary strain relief brackets;

FIG. **51** is a rear view of an exemplary fiber optic housing illustrating how an exemplary door can be easily attached or removed; and

FIG. **52** is a close-up view of how the door in FIG. **51** can be easily attached to or removed from the fiber optic housing;

DETAILED DESCRIPTION OF THE EMBODIMENTS

Reference will now be made in detail to certain embodiments, examples of which are illustrated in the accompanying drawings, in which some, but not all features are illustrated. Indeed, embodiments disclosed herein may be embodied in many different forms and should not be construed as limited to the embodiments set forth herein; rather, these embodiments are provided so that this disclosure will satisfy applicable legal requirements. Whenever possible, like reference numbers will be used to refer to like components or parts.

Embodiments disclosed in the detailed description include apparatuses, and related components and methods for attachment and release of fiber optic housings to and from equipment racks. The fiber optic housings may be attached to equipment racks such that the fiber optic housings may be easily and quickly removed from the equipment rack. In one embodiment, a fiber optic apparatus is disclosed that comprises a fiber optic housing and at least one mounting bracket. The fiber optic housing may have a top, a bottom, a right side, and a left side defining at least one interior chamber configured to support fiber optic equipment. The at least one mounting bracket is configured to removably attach to at least one of the right side or the left side of the fiber optic housing. The at least one mounting bracket is also configured to attach the fiber optic housing to an equipment rack. In one embodiment, the at least one mounting bracket is configured to removably attach to the at least one of the right side or the left side of the fiber optic housing tool-lessly, and by other than external fastening means. In an embodiment, the at least one mounting bracket is removably attached to the at least one of the right side or the left side of the fiber optic housing by a snap attachment integral to at least one of the right side or the left side.

In this regard, FIGS. **1**A-**1**G illustrate a first embodiment of a fiber optic housing **10** that may be attached to and removed from an equipment rack **11** easily and quickly. The fiber optic housing **10** is configured to support fiber optic equipment for establishing fiber optic connections. As non-limiting examples, the fiber optic equipment may include fiber optic modules and/or fiber optic panels. As described in more detail below, the fiber optic housing **10** may be removably attached to the equipment rack **11** from the front or the rear of the equipment rack **11**, as is illustrated in FIGS. **1**A-**1**G.

FIG. **1**A is a front perspective view of the fiber optic housing **10** being mounted to the equipment rack **11** from the front of the equipment rack **11**. FIG. **1**B is a front perspective view of the fiber optic housing **10** after it has been mounted to the equipment rack **11** from the front. Referring to FIG. **1**A, the equipment rack **11** may comprise a pair of vertical supports **12**A, **12**B in one embodiment. Mounting brackets **14**A, **14**B

may be attached to the vertical supports **12**A, **12**B to support the fiber optic housing **10** in the equipment rack **11**. The mounting brackets **14**A, **14**B may be mounted on the equipment rack **11** before sliding the fiber optic housing **10** into the equipment rack **11**. However, in other embodiments, the mounting brackets **14**A, **14**B may be snapped onto the side of the fiber optic housing **10** first. In one embodiment, each of the pair of vertical supports **12**A, **12**B of the equipment rack **11** includes a plurality of openings or holes **16** disposed along the length of the vertical supports **12**A, **12**B of the equipment rack **11** configured to receive a fastener to attach the mounting brackets **14**A, **14**B to the vertical supports **12**A, **12**B.

In one embodiment, the mounting brackets **14**A, **14**B are mounted to the vertical supports **12**A, **12**B before the fiber optic housing **10** is installed in the equipment rack **11**. The fiber optic housing **10** is then slid into place in the equipment rack **11** and removably attached to the mounting brackets **14**A, **14**B using features disclosed herein. This process of supporting the fiber optic housing **10** in the equipment rack **11** may be easier for a technician than securing the mounting brackets **14**A, **14**B to the fiber optic housing **10** first before securing the mounting brackets **14**A, **14**B to the vertical supports **12**A, **12**B. The mounting brackets **14**A, **14**B are typically smaller, lighter, and easier for a technician to align to the holes **16** and evenly in the vertical supports **12**A, **12**B without having to support the additional weight of the fiber optic housing **10**. Therefore, it may be safer for the technician to slide the fiber optic housing **10** into place in the mounting brackets **14**A, **14**B after the mounting brackets **14**A,**14**B are mounted to the equipment rack **11** than to use screws or other fasteners to try to attach the fiber optic housing **10** to the equipment rack **11**.

Once the mounting brackets **14**A, **14**B are mounted to the equipment rack **11**, the fiber optic housing **10** may be placed and secured into the equipment rack **11** by snapping the fiber optic housing **10** into place in the mounting brackets **14**A, **14**B. In one embodiment, the mounting brackets **14**A, **14**B may include a plurality of receivers **18**, **20**, and **22**. Although the receivers **18**, **20**, and **22** may be seen only on the mounting bracket **14**B in FIG. **1**A, the mounting bracket **14**A may have similar receivers **18**, **20**, and **22**. In one embodiment as illustrated in FIG. **1**A, there may be a pair of receivers **18**, one at or near the top rear part of the mounting bracket **14**B, and a corresponding receiver **18** at or near the bottom rear part of the mounting bracket **14**B. The mounting bracket **14**B may also include a pair of receivers **20**, one at or near the top middle part of the mounting bracket **14**B, and a corresponding receiver **20** at or near the bottom middle part of the mounting bracket **14**B. The mounting bracket **14**B may also include a pair of receivers **22**, one at or near the top front part of the mounting bracket **14**B, and a corresponding receiver **22** at or near the bottom front part of the mounting bracket **14**B. Although the embodiment of FIG. **1**A illustrates three (3) pairs of receivers **18**, **20**, and **22**, any number of receivers sufficient to attach the fiber optic housing **10** to the mounting brackets **14**A, **14**B may be used.

In one embodiment, the fiber optic housing **10** may include a plurality of snap features **24**, **26**, and **28** disposed on a side **30** of the fiber optic housing **10**. The snap features **24**, **26**, and **28** may also be referred to as snap attachments or snap attachment features. Although the snap features **24**, **26**, and **28** may be seen only on one side **30** of the fiber optic housing **10** in FIG. **1**A, the fiber optic housing **10** may have similar snap features **24**, **26**, and **28** on the other side as well. In one embodiment, as seen in FIG. **1**A, there may be a pair of snap features **24**, one at or near the top rear part of a rear portion **32** of the side **30** of the fiber optic housing **10**, and a corresponding snap feature **24** at or near the bottom rear part of the rear portion **32** of the side **30**. The side **30** may also include a pair of snap features **26**, one at or near the top middle part of the rear portion **32** of the side **30**, and a corresponding snap feature **26** at or near the bottom middle part of the rear portion **32** of the side **30**. The side **30** may also include a pair of snap features **28**, one at or near the top front part of the rear portion **32** of the side **30**, and a corresponding snap feature **28** at or near the bottom front part of the rear portion **32** of the side **30**. Although the embodiment of FIG. **1**A illustrates three (3) pairs of snap features **24**, **26**, and **28**, any number of snap features **24**, **26**, and **28** sufficient to attach the fiber optic housing **10** to the mounting brackets **14**A, **14**B may be used.

The receivers **18**, **20**, and **22** of the mounting brackets **14**A, **14**B are configured to receive the snap features **24**, **26**, and **28** disposed on the sides **30** of the fiber optic housing **10**. As the fiber optic housing **10** is slid into the equipment rack **12**, the snap features **24**, **26**, and **28** disposed on the sides **30** of the fiber optic housing **10** selectably engage with the receivers **18**, **20**, and **22** of the mounting brackets **14**A, **14**B and are locked into place, thereby allowing the fiber optic housing **10** to be quickly and easily snapped into place in the equipment rack **11**.

The receivers **18**, **20**, and **22** of the mounting brackets **14**A, **14**B may take a variety of shapes and sizes, as may the snap features **24**, **26**, and **28** disposed on the sides **30** of the fiber optic housing **10**. The receivers **18**, **20**, and **22** may be of any shape and size that correspond to the shape and size of the snap features **24**, **26**, and **28** such that the snap features **24**, **26**, and **28** selectably engage with the receivers **18**, **20**, and **22** of the mounting brackets **14**A, **14**B and are locked into place to hold the fiber optic housing **10** in the equipment rack **11**.

The fiber optic housing **10** may also be loaded into the equipment rack **11** from the rear of the equipment rack **11**. FIG. **1**C is a front perspective view of the fiber optic housing **10** as it is being mounted to the equipment rack **11** from the rear. FIG. **1**D is a front perspective view of a fiber optic housing **10** after it has been mounted to the equipment rack **11** from the rear. The fiber optic housing **10** is snapped into place in a similar fashion as described above with respect to FIGS. **1**A and **1**B. The snap features **24**, **26**, and **28** on the side **30** of the fiber optic housing **10** selectably engage the receivers **18**, **20**, and **22** of the mounting brackets **14**A, **14**B as the fiber optic housing **10** is slid into the equipment rack **11**. In this manner, the fiber optic housing **10** may be quickly and easily attached to the mounting brackets **14**A, **14**B, thereby installing the fiber optic housing **10** into the equipment rack **11**.

Any type of fiber optic housing having the above described snap features may be quickly and easily mounted in an equipment rack having mounting brackets with receivers of the type described above. FIG. **1**E is a front perspective view of an alternate embodiment of a fiber optic housing **34** being mounted to the equipment rack **11** from the front. FIG. **1**F is a front perspective view of the alternate embodiment of the fiber optic housing **34** illustrated in FIG. **1**E after being mounted to the equipment rack **11**. The fiber optic housing **34** in FIG. **1**E has fiber optic modules **36** vertically mounted in the fiber optic housing **34**. The fiber optic housings **10** and **34** illustrated in FIGS. **1**A-**1**F are 4U in this embodiment, but any size fiber optic housing may be mounted in an equipment rack having mounting brackets with the receivers disclosed above to selectably engage snap features disposed on the side of the fiber optic housing as disclosed above.

The designation "U" refers to a standard equipment shelf size of a fiber optic equipment rack or a cabinet. This may also be referred to as "RU." For example, an equipment rack may support **42** 1U-sized shelves, with "U" equal to a standard

1.75 inches in height and nineteen (19) inches in width. In certain applications, the width of "U" may be twenty-three (23) inches. Other heights and widths may be designated as "U." Typically, the more rack space (the more "U's") a fiber optic housing takes up, the higher the fiber capacity in the fiber optic housing.

FIG. **1**G is a rear perspective view of the fiber optic housing **34** being removed from the equipment rack **11**. When the fiber optic housing **34** is removed from the equipment rack **11**, as will be discussed in more detail below with respect to FIGS. **3**A-**3**C and **4**, mounting brackets **38**A, **38**B remain attached to the equipment rack **11**. In this manner, the fiber optic housing **34** can be easily re-mounted into the equipment rack **11** at a later time if desired. As mentioned above, the mounting brackets **38**A, **38**B may have any number of receivers configured to receive snap features on a side of the fiber optic housing **34**. In the embodiment seen in FIG. **1**G, the mounting brackets **38**A, **38**B each have a single circular receiver **40**.

FIG. **2** is a rear view of the fiber optic housing **34** mounted in the equipment rack **11** with a close-up view of snap features disposed on the side **30** of the fiber optic housing **34**. The fiber optic housing **34** in this embodiment has a plurality of snap features **42** disposed on the side **30** of the fiber optic housing **34**. The snap features **42** in FIG. **2** are of a half-circle shape and are configured to selectably engage with corresponding receivers on the mounting brackets attached to the equipment rack **11**.

FIGS. **3**A-**3**C illustrate how a fiber optic housing can be easily removed from an equipment rack. In this regard, FIG. **3**A is a front perspective view of the fiber optic housing **34** mounted in the equipment rack **11**. Although the fiber optic housing **34** in FIG. **3**A has the fiber optic modules **36** vertically mounted in the fiber optic housing **34**, any type of fiber optic housing, including but not limited to the fiber optic housing **10** illustrated in FIGS. **1**A-**1**D, or the fiber optic housing **10** illustrated in FIG. **2**, may be mounted into the equipment rack **11** and then removed.

FIG. **3**B is a rear perspective view of the fiber optic housing **34** of FIG. **3**A illustrating a release tab **44** for removing the fiber optic housing **34** from the equipment rack **11**. FIG. **3**C is a rear perspective view of the fiber optic housing **34** of FIG. **3**A being removed from the equipment rack **11**. Referring to FIGS. **3**B and **3**C, the release tab **44** is selectably engaged with an opening **46** in a mounting bracket **48**B attached to the equipment rack **11**. Although only a single release tab **44** and a single opening **46** on the mounting bracket **48**B are illustrated in FIG. **3**C, in one embodiment, there may be a similar opening on a mounting bracket **48**A to receive a release tab similar to the release tab **44** on the other side of the fiber optic housing **34**. In another embodiment, there may be multiple release tabs **44** for each of the mounting brackets **48**A, **48**B.

To remove the fiber optic housing **34** from the equipment rack **11**, the release tab **44** is pressed inward by a user in one embodiment, which causes the release tab **44** to disengage from the opening **46** on the mounting bracket **48**B, allowing the fiber optic housing **34** to be removed from the equipment rack **11**. In one embodiment, the release tab **44** is flexible and resilient, such that it is biased to move from a first position to a second position when a force is exerted on the release tab **44**, and then returns to the first position by itself when the force is no longer exerted. In another embodiment, the release tab **44** may be spring loaded. In the embodiment having two (2) release tabs **44**, one on each side of the fiber optic housing **34**, both release tabs **44** may be pressed inward by the user at approximately the same time to remove the fiber optic housing **34** from the equipment rack **11**. Although the release tab **44** is pressed inward in the above embodiments, in other embodiments, the release tab **44** may be lifted up, pulled outward, pressed downward, or manipulated in other ways and/or directions to cause the release tab **44** to disengage from the opening **46** on the mounting bracket **48**B, allowing the fiber optic housing **34** to be removed from the equipment rack **11**.

FIG. **4** is a detail view of a mounting bracket configured to be removably attached to a side of a fiber optic housing according to an exemplary embodiment. The mounting bracket **48**B in the embodiment illustrated in FIG. **4** has the opening **46** and slot features **50**, **52** on a top surface **53** of the mounting bracket **48**B. The slot features **50**, **52** on the mounting bracket **48**B engage with tongue features **54**, **55**, and **56** on a top surface **58** of a side plate **60** of the fiber optic housing **34**. The slot features **50**, **52** on the mounting bracket **48**B may be a slot **50** and a tab **52** in one embodiment, as seen in FIG. **4**. The tongue features **54**, **55**, and **56** may be a protrusion **54** at one end of a raised guide member **55** and a tongue **56** at the opposite end of the raised guide member **55** in one embodiment, as seen in FIG. **4**. As the fiber optic housing **34** is moved into contact with the mounting bracket **48**B, the top surface **53** of the mounting bracket **48**B slides along the side of the raised guide member **55** until the slot **50** mates with the tongue **56** and the tab **52** mates with the protrusion **54**. As this occurs, the opening **46** of the mounting bracket **48**B selectively engages with the release tab **44** on the side plate **60** of the fiber optic housing **34**. The release tab **44** extends outwards from the side plate **60** of the fiber optic housing **34** a sufficient distance to extend out of the opening **46** when the opening **46** selectively engages with the release tab **44**. If the fiber optic housing **34** is mounted to an equipment rack **11**, and a user wishes to remove the fiber optic housing **34** from the equipment rack **11**, the release tab **44** may be pressed inward by a user, which causes the release tab **44** to disengage from the opening **46** on the mounting bracket **48**B, allowing the fiber optic housing **34** to be removed from the equipment rack **11**.

When the fiber optic housing **34** is removed from the equipment rack **11** (as illustrated in FIG. **3**C), the mounting brackets **48**A, **48**B remain attached to the equipment rack **11**. Then, if the user wishes to re-install the fiber optic housing **34** in the equipment rack **11**, such can be done quickly and easily. FIG. **5** is a front perspective view of the fiber optic housing **34** of FIGS. **3**A-**3**C being re-installed into the equipment rack **11** from the rear of the equipment rack **11**. As the fiber optic housing **34** is slid forward by the user toward the mounting brackets **48**A, **48**B attached to the equipment rack **11**, the raised guide member **55** on each side of the top surface **58** of the side plate **60** slides along the side of the top surface **53** of the respective mounting brackets **48**A, **48**B until the protrusion **54** on each side plate **60** mates with the tab **52** on the respective mounting bracket **48**A or **48**B and the tongue **56** mates with the slot **50** of the respective mounting bracket **48**A or **48**B. As this occurs, the release tab **44** on each side plate **60** selectively engages with the opening **46** of the respective mounting bracket **48**A or **48**B, thereby locking the fiber optic housing **34** into place in the equipment rack **11**. The mounting brackets **48**A, **48**B may be mounted on the equipment rack **11** before sliding the fiber optic housing **34** into the equipment rack **11**, as seen in FIG. **5**.

However, in other embodiments, the mounting brackets may be snapped onto the side of the fiber optic housing first. FIG. **6** is a front perspective view of a fiber optic housing **62** including a mounting bracket snap attachment feature **66**. In this regard, the fiber optic housing **62** has a left side **64**. In one embodiment, the left side **64** of the fiber optic housing **62** has a plurality of mounting bracket snap attachment features **66**. Although only the left side **64** of the fiber optic housing **62** is

illustrated in FIG. **6**, the opposite side may also have similar mounting bracket snap attachment features **66**. In addition, although the embodiment of FIG. **6** illustrates two (2) mounting bracket snap attachment features **66**, any number of mounting bracket snap attachment features **66** may be used.

With continuing reference to FIG. **6**, a mounting bracket **68** has a plurality of openings **70** which are configured to fit together with the mounting bracket snap attachment features **66** integral to the fiber optic housing **62** to attach the mounting bracket **68** to the fiber optic housing **62**. The mounting bracket **68** can be removably attached to the fiber optic housing **62** such that the mounting bracket **68** can be removed from the fiber optic housing **62**, or the fiber optic housing **62** can be removed from the mounting bracket **68**, such as when the mounting bracket **68** is mounted to an equipment rack. The number of openings **70** may correspond to the number of mounting bracket snap attachment features **66**. The openings **70** of the mounting bracket **68** are placed over the mounting bracket snap attachment features **66** and slid toward the back of the fiber optic housing **62** until the mounting bracket snap attachment features **66** lock, or snap, into place against an edge of the openings **70**. In one embodiment, the mounting bracket snap attachment features **66** fit tightly enough in the openings **70** that there is sufficient friction between the mounting bracket snap attachment features **66** and the mounting bracket **68** to form a friction fit. The mounting bracket snap attachment features **66** in FIG. **6** are triangular in shape and the openings **70** are square in shape, but any shape of mounting bracket snap attachment features **66** and openings **70** can be used that will allow the mounting bracket snap attachment features **66** to lock, or snap, into the openings **70**. The mounting bracket **68** can then be easily removed from the fiber optic housing **62** by sliding the mounting bracket **68** back toward the front of the fiber optic housing **62** until the mounting bracket snap attachment features **66** are within the openings **70**, and the mounting bracket **68** can be lifted away from the left side **64** such that the mounting bracket snap attachment features **66** pass through the openings **70**. In another embodiment, the fiber optic housing **62** can be removed from the mounting bracket **68** in a similar fashion, such as when the mounting bracket **68** is mounted to an equipment rack.

As also illustrated in FIG. **6**, the mounting brackets **68** may be one or more snap-on, removable mounting brackets **68** that are removably attachable to the side of the fiber optic housing without the use of screws or other hardware. In one embodiment, the mounting brackets **68** are removably attached to the fiber optic housing **62** using the mounting bracket snap attachment features **66**. These mounting bracket snap attachment features **66** can save time during installation. No tools may be needed for installation of the fiber optic housing **62** to an equipment rack for tool-less installation, and no additional hardware may be needed. Thus, a technician need not worry about tools or hardware that may be lost or missing. The mounting brackets may be easily changed out with different designs for different types of equipment racks and for different positions in the equipment racks.

In this manner, the mounting brackets may be removably attached to at least one of the right side and the left side of the fiber optic housing tool-lessly, and by other than external fastening means. As described above, "tool-lessly" as used here means that the set of components is assembled using fastening means, such as snap attachments, that are integral to one or more of the components in the set of components, rather than external fastening means. Once the set of components is assembled tool-lessly, then the assembled set of components may be attached to another component or device using external fasteners and tools, and even with this use of external fasteners and tools, the assembly of the original set of components is still considered to be "tool-less." For example, the mounting brackets may be attached to an equipment rack using tools and external fastening means, but the mounting brackets may be tool-lessly attached to the fiber optic housing.

FIG. **6** also illustrates rubber entry grommets **72** on the top and bottom rear and front, and left and right sides rear and front of the fiber optic housing **62**. Rubber provides better protection than solid materials, especially on the edges, and provides a better seal to keep dust, insects, and rodents out of the housings. The rubber entry grommets **72** provide entry and exit points for fiber optic cables or optical fibers to be routed in and out of the fiber optic housing **62** to the appropriate locations.

FIG. **7** is a front perspective view of a mounting bracket **74** configured to be removably attached to a side **78** of a fiber optic housing **80** according to another exemplary embodiment. FIG. **8** is a cut section of the mounting bracket **74** and side **78** of the fiber optic housing **80** illustrated in FIG. **7**. The mounting bracket **74** in FIGS. **7** and **8** is of a different type than the mounting bracket **68** of FIG. **6**. In the embodiment of FIGS. **7** and **8**, the mounting bracket **74** has a single circular opening **76**. The mounting bracket **74** may also have a plurality of recesses **75**, which allow a space for other apparatuses to be attached to the fiber optic housing **80**. The side **78** of the fiber optic housing **80** has a groove **82** configured to receive the mounting bracket **74**. The groove **82** extends a distance down the side **78** that corresponds to a length of the mounting bracket **74**. The side **78** has an interior wall with a release tab disposed thereon (similar to an interior wall **84** with a release tab **86** illustrated on the opposite side from the side **78**). When the mounting bracket **74** is slid into the groove **82** toward the rear of the fiber optic housing **80**, the opening **76** will selectively engage with the release tab **86** to lock the mounting bracket **74** into place. If it is desired to remove the mounting bracket **74**, the release tab **86** can be pressed and the mounting bracket **74** can be pulled out of the groove **82**.

FIG. **9** is a rear perspective view of a fiber optic housing **81** including one or more strain relief brackets **85**. One or more snap-on removable strain relief brackets **85** may be attached to the fiber optic housing **81** as illustrated in FIG. **9**. In one embodiment, the strain relief brackets **85** may be L-shaped, with a flange **83** at one end having a plurality of holes **87**. The holes **87** are for ties such as tyrap or Velcro ties to help secure fiber optic cables or optical fibers to the strain relief brackets **85**. The snap-on removable strain relief brackets **85** can be easily snapped on to a left side **92** of the fiber optic housing **81** using a plurality of strain relief bracket snap attachment features **88** disposed on the left side **92** of the fiber optic housing **81**. In one embodiment, the plurality of strain relief bracket snap attachment features **88** are similar to the plurality of mounting bracket snap attachment features **66** used to removably attach the mounting bracket **68** to the fiber optic housing **62** in FIG. **6**.

In one embodiment as illustrated in FIG. **9**, the left side **92** of the fiber optic housing **81** has a plurality of strain relief bracket snap attachment features **88**. Although only the left side **92** of the fiber optic housing **81** is illustrated in FIG. **9**, the opposite side, the right side, may also have similar strain relief bracket snap attachment features **88**. In addition, although the embodiment of FIG. **9** illustrates two (2) strain relief bracket snap attachment features **88**, any number of strain relief mounting bracket snap attachment features **88** may be used.

With continuing reference to FIG. **9**, each strain relief bracket **85** has at least one opening **90** which is configured to fit together with one of the strain relief bracket snap attachment features **88**. The opening **90** of each strain relief bracket **85** is placed over one of the strain relief bracket snap attachment features **88** and slid toward the back of the fiber optic housing **81** until the strain relief bracket snap attachment feature **88** locks, or snaps, into place against an edge of the opening **90**. In one embodiment, the strain relief bracket snap attachment features **88** fit tightly enough in the openings **90** that there is sufficient friction between the strain relief bracket snap attachment features **88** and the strain relief bracket **85** to form a friction fit. The strain relief bracket snap attachment features **88** in FIG. **9** are triangular in shape and the openings **90** are square in shape, but any shape of strain relief bracket snap attachment features **88** and openings **90** can be used that will allow the strain relief bracket snap attachment features **88** to lock, or snap, into the openings **90**. The strain relief bracket **85** can then be easily removed by sliding the strain relief bracket **85** back toward the front of the fiber optic housing **81** until the strain relief bracket snap attachment feature **88** is within the opening **90**, and the strain relief bracket **85** can be lifted away from the left side **92** such that the strain relief bracket snap attachment feature **88** passes through the opening **90**.

As illustrated in FIG. **9**, the snap-on cable strain relief brackets do not require the use of screws or other hardware to be attached to the fiber optic housing **81**. The snap attachment feature saves time during installation. No tools or hardware may be needed. Thus, a technician need not worry about tools or hardware that may be lost or missing. In addition, the strain relief brackets may be easily changed out for different strain relief applications. In this manner, the strain relief brackets may be removably attached to at least one of the right side and the left side of the fiber optic housing tool-lessly, and by other than external fastening means. As described above, "tool-lessly" as used here means that the strain relief brackets are attached to the fiber optic housing using fastening means, such as snap attachments, that are integral to one or more of the components in the set of components, rather than by using external fastening means.

FIG. **10** is a side perspective view of a fiber optic housing **94** and a strain relief bracket **96**. In FIG. **10**, an alternate type of strain relief bracket and an alternate type of strain relief bracket snap attachment feature are illustrated. FIGS. **11**A and **11**B illustrate a close-up view of the fiber optic housing **94** and strain relief bracket **96** illustrated in FIG. **10**. In one embodiment, the strain relief bracket **96** may be attached to the fiber optic housing **94** as illustrated in FIGS. **10**, **11**A, and **11**B. In one embodiment, the strain relief bracket **96** may be L-shaped, with a flange **98** at one end having a plurality of holes **100**. The holes **100** may be of any shape and are configured to receive ties such as tyrap or Velcro ties to help secure fiber optic cables or optical fibers to the strain relief bracket **96**. The snap-on removable strain relief brackets **96** may also comprise a plurality of openings **102** and **104**. In the embodiments seen in FIGS. **10**, **11**A, and **11**B, there are a pair of keyhole-shaped openings **102** and a pair of U-shaped openings **104**. However, there may be any number and any shape of openings in other embodiments.

The strain relief bracket **96** can be easily snapped onto a right side **95** of the fiber optic housing **94** using a plurality of strain relief bracket snap attachment features **106**, **108**, and **110** disposed on the right side **95** of the fiber optic housing **94**. In one embodiment, as seen in FIG. **11**B, the plurality of strain relief bracket snap attachment features **106**, **108**, and **110** comprise a pair of half-moon-shaped snap attachment features **106** with a lip **107**, a U-shaped snap attachment feature **108** with raised edges **109**, and a release button **110**. The plurality of strain relief bracket snap attachment features **106**, **108**, and **110** may be used to removably attach the strain relief bracket **96** to the fiber optic housing **94** in FIGS. **10**, **11**A, and **11**B.

In one embodiment as illustrated in FIG. **10**, the right side **95** of the fiber optic housing **94** has the plurality of strain relief bracket snap attachment features **106**, **108**, and **110**. Although only the right side **95** of the fiber optic housing **94** is illustrated in FIG. **10**, the opposite side may also have similar strain relief bracket snap attachment features. In addition, any number of strain relief mounting bracket snap attachment features may be used. The strain relief bracket **96** in FIG. **10** may be easily snapped onto the right side **95** of the fiber optic housing **94** by placing the pair of keyhole-shaped openings **102** over the pair of half-moon-shaped snap attachment features **106** and the pair of U-shaped openings **104** over the U-shaped snap attachment feature **108** and the release button **110** and then sliding the strain relief bracket **96** toward the front of the fiber optic housing **94** (to the left in FIG. **10**). The lip **107** on each of the half-moon-shaped snap attachment features **106** will help lock the half-moon-shaped snap attachment features **106** into the keyhole-shaped openings **102**, as seen in FIG. **11**B. The U-shaped snap attachment feature **108** with raised edges **109** will selectably engage with one of the U-shaped openings **104** and the release button **110** will selectably engage with the other one of the U-shaped openings **104**.

FIG. **11**A illustrates the strain relief bracket **96** snapped into place on the right side **95** of the fiber optic housing **94**. Referring to FIG. **11**B, in one embodiment, the strain relief bracket **96** can then be easily removed by pressing the release button **110**. The release button **110** is coupled to the U-shaped snap attachment feature **108** with raised edges **109** such that when the release button **110** is pressed, the raised edges **109** of the U-shaped attachment feature **108** are disengaged with the U-shaped opening **104**. A user may then slide the strain relief bracket **96** back toward the rear of the fiber optic housing **94** (to the right in FIG. **10** or FIG. **11**A) to remove the strain relief bracket **96**. FIG. **12** is a cut section of the strain relief bracket **96** and the back of a left side **97** of the fiber optic housing **94** in FIGS. **10**, **11**A, and **11**B, illustrating how the strain relief bracket **96** is mounted to the fiber optic housing **94** using the snap attachment features disclosed above.

FIG. **13** is a partial, rear, perspective view of a fiber optic housing **112** illustrating a strain relief bracket **114** with fiber optic cables according to one embodiment. The fiber optic housing **112** may be any type of fiber optic housing. The strain relief brackets **114** having a plurality of openings **116** may be mounted to the fiber optic housing **112** using the snap attachment features disclosed above in FIGS. **9**, **10**, **11**A, and **11**B. FIG. **13** illustrates how the removable strain relief brackets **114** allow fiber optic cables to enter at any angle. In the embodiment of FIG. **13**, buffer tubes **118**A and **118**B each containing one or more optical fibers **120**A and **120**B, respectively, may be tied to the strain relief brackets **114** by means of a fastener **122** that is routed through the openings **116** of the strain relief brackets **114** to tie the buffer tubes **118**A and **118**B to the strain relief brackets **114**. Although buffer tubes **118**A and **118**B are illustrated in FIG. **13**, any sort of fiber optic cable or optical fiber can be fastened to the strain relief brackets **114**. The fastener **122** may be any suitable fastener, including but not limited to a tywrap, a Velcro tie, or a plastic fastener, that will tie the buffer tubes **118**A and **118**B, or other fiber optic cable or optical fiber, to the strain relief brackets **114**. With traditional strain relief brackets, fiber optic cables can enter the fiber optic housing **112** at only a single angle, but

with the snap-on removable strain relief brackets **114** disclosed above, the fiber optic cables may enter at any angle, and different fiber optic cables may enter at multiple angles, as illustrated in FIG. **13**.

Embodiments disclosed below include fiber optic housings configured for tool-less assembly, and related components and methods. In one embodiment, a fiber optic housing is provided having a top, a bottom, a right side, and a left side which removably attach to each other tool-lessly, and by other than external fastening means, thereby defining at least one interior chamber configured to support fiber optic equipment. The top, bottom, right side, and left side of the fiber optic housing may be removably attached to each other by using a snap attachment integral to at least one of the bottom, the right side, and the left side. In an embodiment, the fiber optic housing further has one or more mounting brackets and/or strain relief brackets, which may be attached to the fiber optic housing by other than external fastening means. In another embodiment, the mounting brackets and/or strain relief brackets may be attached to a side of the fiber optic housing by using a quick snap attachment integral to at least one of the side of the fiber optic housing and the mounting brackets and/or strain relief brackets.

In this regard, FIG. **14** is a front perspective view of a fiber optic housing **124** with a front door **126** closed. The fiber optic housing **124** in FIG. **14** may be a seven inch fiber optic housing for the local area network (LAN) and data center environment. The fiber optic housing **124** in FIG. **14** may be mountable in 19- or 23-inch equipment racks or cabinets. The fiber optic housing **124** in FIG. **14** may provide interconnect or cross-connect capabilities between the outside plant, riser, or distribution cables and the opto-electronics.

FIG. **15** illustrates exploded and assembled front perspective views of an exemplary embodiment of the fiber optic housing **124**. FIG. **15** illustrates a quick fit assembly of the components of the fiber optic housing **124**, particularly, a top panel **128**, a bottom panel **130**, a left side panel **132**, and a right side panel **134**, which are configured to be quickly and easily assembled with little or no tools. The top panel **128**, the bottom panel **130**, the left side panel **132**, and the right side panel **134** may also be referred to as the top, the bottom, the left side, and the right side, respectively. The top panel **128**, the bottom panel **130**, the left side panel **132**, and the right side panel **134** together define at least one interior chamber **135** of the fiber optic housing **124** configured to support fiber optic equipment. In this embodiment, each of the top panel **128**, the bottom panel **130**, the left side panel **132**, and the right side panel **134** of the fiber optic housing **124** further includes snap attachment features configured to snap the components together, as described more fully below.

In the embodiment of FIG. **15**, the bottom panel **130** has side extensions **136**, **138** that extend upward in a direction approximately perpendicular to the bottom panel **130**. Likewise, the top panel **128** has side extensions **140**, **142** that extend downward in a direction approximately perpendicular to the top panel **128**. The side extensions **136**, **138** of the bottom panel **130** and the side extensions **140**, **142** of the top panel **128** each have a plurality of snap attachments **144** disposed thereon (though only the snap attachments **144** disposed on the side extension **136** of the bottom panel **130** and the snap attachments **144** disposed on the side extension **140** of the top panel **128** can be seen in FIG. **15**). These snap attachments **144** may be raised from a surface of the side extensions **136**, **138**, **140**, and **142**. The left side panel **132** may have a plurality of snap attachment receivers **146** at a top edge **148** and a bottom edge **150** of the left side panel **132**. Although not seen in FIG. **15**, the right side panel **134** may have similar snap attachment receivers **146** at a top edge and at a bottom edge.

The snap attachment receivers **146** at the top edge **148** of the left side panel **132** are configured to receive the snap attachments **144** disposed on the side extension **140** of the top panel **128**. The snap attachment receivers **146** at the bottom edge **150** of the left side panel **132** are configured to receive the snap attachments **144** disposed on the side extension **136** of the bottom panel **130**. In this manner, the left side panel **132** may be tool-lessly attached to the top panel **128** and the bottom panel **130**. The right side panel **134** may be similarly attached to the top panel **128** and the bottom panel **130** using snap attachment receivers on a top edge and a bottom edge to receive snap attachments on the side extension **142** of the top panel **128** and the side extension **138** of the bottom panel **130**, respectively. In this manner, the top panel **128**, the bottom panel **130**, the left side panel **132**, and the right side panel **134** may be assembled together into the fiber optic housing **124** quickly and easily with little or no tools.

The snap attachments **144** and the snap attachment receivers **146** may be any size and shape as long as the snap attachment receivers **146** are of a size and shape that allows the snap attachments **144** to fit and snap into the snap attachment receivers **146** in a manner that the components of the fiber optic housing **124** are assembled together in a sturdy fashion.

The assembled fiber optic housing **124** can be quickly and easily unassembled by detaching the top panel **128**, the bottom panel **130**, the left side panel **132** and the right side panel **134** from each other tool-lessly.

The quick fit assembly allows the components of the fiber optic housing **124** to be shipped in smaller packaging, saving shipping cost and storage space. In one embodiment, an end user can assemble the fiber optic housing **124** at the time of use, such as at the installation location. In one embodiment, an end user can assemble the fiber optic housing **124** with little or no tools. Additionally, the quick fit assembly makes field repairs a possibility with the purchase of repair kits, and allows the fiber optic housing **124** to be transformed in the field by replacing components with ones that provide a different function.

FIG. **16** illustrates an exploded front perspective view of an exemplary embodiment of a fiber optic housing **152**. FIG. **16** illustrates an alternate embodiment of the fiber optic housing **152** that can be assembled easily and quickly with little or no tools. FIG. **16** illustrates a quick fit assembly of the components of the fiber optic housing **152**, particularly, an inside top panel **154**, a bottom panel **156**, a left side panel **158**, and a right side panel **160**, which are configured to be quickly and easily assembled with little or no tools. The inside top panel **154**, the bottom panel **156**, the left side panel **132**, and the right side panel **160** together define at least one interior chamber **161** of the fiber optic housing **152** configured to support fiber optic equipment. In this regard, each of the inside top panel **154**, the bottom panel **156**, the left side panel **158**, and the right side panel **160** includes snap attachment features configured to snap the components together. In one embodiment, the fiber optic housing **152** may also include a cover plate **162** for the inside top panel **154**.

In one embodiment, as seen in FIG. **16**, the bottom panel **156** has side flanges **164**, **166** on each side of the bottom panel **156** that extend upward in a direction approximately perpendicular to the bottom panel **156**. The side flanges **164**, **166** of the bottom panel **156** each have one or more receivers **168**A, **168**B disposed on the side flanges **164**, **166**. The inside top panel **154** has side flanges **170**, **172** on each side of the inside top panel **154** that extend downward in a direction approxi-

mately perpendicular to the inside top panel **154**. The side flanges **170**, **172** of the inside top panel **154** each have one or more receivers **174** disposed on the side flanges **170**, **172**. Although FIG. **16** illustrates the side flanges **164**, **166** of the bottom panel **156** each having two (2) receivers **168**A, **168**B, and the side flanges **170**, **172** of the inside top panel **154** each having one receiver **174**, any number of receivers like the receivers **168**A, **168**B may be disposed on the side flanges **164**, **166** of the bottom panel **156** and any number of receivers **174** may be disposed on the side flanges **170**, **172** of the inside top panel **154**. The inside top panel **154** also has a plurality of standoffs **176** on its top surface. In the embodiment of FIG. **16**, the inside top panel **154** has two (2) standoffs **176** on a left edge **178** of the inside top panel **154**, one toward a front edge **180** of the inside top panel **154**, and one toward a back edge **182** of the inside top panel **154**. The inside top panel **154** of FIG. **16** also has two standoffs **176** on a right edge **184** of the inside top panel **154**, one toward the front edge **180** of the inside top panel **154** and one toward the back edge **182** of the inside top panel **154**. The standoffs **176** are also used together with the receivers **168**A, **168**B, **174** to attach the inside top panel **154** to the left side panel **158** and to the right side panel **160**.

The left side panel **158** may include a plurality of snap attachments **186**A, **186**B, and **186**C. In the embodiment of FIG. **16**, the left side panel **158** has two (2) snap attachments **186**A, **186**B on a bottom portion **188** of an interior side **190** of the left side panel **158**, one toward a front portion **192** of the left side panel **158** and one toward a rear portion **194** of the left side panel **158**. The left side panel **158** also has at least one snap attachment **186**C on a top portion **196** of the interior side **190** of the left side panel **158** toward the front portion **192** of the left side panel **158**. The snap attachments **186**A, **186**B, and **186**C in the embodiment of FIG. **16** are half-moon-shaped with a lip. In other embodiments, the number, location, and shape of the snap attachments **186**A, **186**B, and **186**C may vary in order to correspond to the receivers **168**A, **168**B on the side flanges **164** and **166** of the bottom panel **156** and the receivers **174** on the side flanges **170**, **172** of the inside top panel **154**. The left side panel **158** also may include a top flange **198** and a bottom flange **200**. The top flange **198** may have a plurality of grooves **202** disposed thereon. In the embodiment of FIG. **16**, the top flange **198** has two (2) grooves **202** toward a front portion **204** of the top flange **198**. In one embodiment, as illustrated in FIG. **16**, the grooves **202** are L-shaped, but other shapes may also be used.

With continued reference to FIG. **16**, the right side panel **160** is symmetrical to the left side panel **158** and may also include a plurality of snap attachments **186**A and **186**B, a top flange **205** having a plurality of grooves **206**, and a bottom flange **208**. The left side panel **158** and the right side panel **160** may be tool-lessly attached to the bottom panel **156** quickly and easily. The left side panel **158** may be attached to the side flange **164** of the bottom panel **156** by positioning the snap attachments **186**A, **186**B on the left side panel **158** within the receivers **168**A, **168**B on the side flange **164** of the bottom panel **156** and sliding the left side panel **158** toward the back of the bottom panel **156** until the snap attachments **186**A, **186**B snap, or lock, into place within the receivers **168**A, **168**B. The bottom flange **200** will be positioned under the bottom panel **156** as the left side panel **158** is attached to the bottom panel **156**. In the embodiment seen in FIG. **16**, the receivers **168**A, **168**B are keyhole-shaped and correspond to the half-moon shaped snap attachments **186**A, **186**B. However, the snap attachments **186**A, **186**B and the receivers **168**A, **168**B may be any shape as long as the receivers **168**A, **168**B correspond to the snap attachments **186**A, **186**B such that the snap attachments **186**A, **186**B snap, or lock, into place within the receivers **168**A, **168**B. In one embodiment, the receivers **168**A, **168**B are slightly larger at one end than the snap attachments **186**A, **186**B so that the snap attachments **186**A, **186**B may fit into the receivers **168**A, **168**B, respectively.

The right side panel **160** may be attached to the side flange **166** of the bottom panel **156** in a fashion similar to that disclosed above for attaching the left side panel **158** to the side flange **164** of the bottom panel **156**.

Still referring to FIG. **16**, as well as to FIG. **18**, the inside top panel **154** may be tool-lessly attached to the left side panel **158** and the right side panel **160** quickly and easily. FIG. **18** is a close up front perspective view illustrating details of how the inside top panel **154** of the fiber optic housing **152** of FIGS. **16**, **17**A and **17**B is connected to a side panel **158**, **160** of the fiber optic housing **152**. To do so, a user will slide the inside top panel **154** from the front of the left side panel **158** and the right side panel **160** toward the back of the left side panel **158** and the right side panel **160** such that the inside top panel **154** slides under the top flange **198** of the left side panel **158** and under the top flange **205** of the right side panel **160**. The inside top panel **154** is positioned such that the receiver **174** on the side flange **170** of the inside top panel **154** is aligned with the snap attachment **186**C located at the top portion **196** of the left side panel **158**, which will also align the standoffs **176** on the left edge **178** of the inside top panel **154** with the grooves **202** on the top flange **198** of the left side panel **158**. The inside top panel **154** should also be positioned such that the receiver **174** on the side flange **172** of the inside top panel **154** is aligned with the snap attachment **186**C located at the top portion of the right side panel **160**, which will also align the standoffs **176** on the right edge **184** of the inside top panel **154** with the grooves **206** on the top flange **205** of the right side panel **160**. Once the inside top panel is aligned, the inside top panel **154** can be snapped onto the left side panel **158** and the right side panel **160** by snapping, or locking, the snap attachments **186**C into the receivers **174** and the standoffs **176** into the grooves **202** and **206** (as seen in the close-up insets of FIG. **18**).

In the embodiment as illustrated in FIGS. **16** and **18**, the receivers **174** are keyhole-shaped in order to correspond to the half-moon shaped snap attachments **186**C. However, the snap attachments **186**C and the receivers **174** may be any shape as long as the receivers **174** correspond to the snap attachments **186**C such that the snap attachments **186**C snap, or lock, into place within the receivers **174**. In one embodiment, the receivers **174** are slightly larger at one end than the snap attachments **186**C so that the snap attachments **186**C may fit into the receivers **174**. Likewise, the standoffs **176** and the grooves **202** and **206** may be any size and shape as long as the standoffs **176** will lock into place in the grooves **202** and **206**.

In the embodiment as illustrated in FIG. **18**, the side flanges **170** and **172** of the inside top panel **154** may also include one or more cut out sections **209**, sometimes known as crenels. The left side panel **158** may also include one or more protrusions **210**, sometimes known as merlons, on the interior side **190** of the left side panel **158** toward the front portion **192** of the left side panel **158**. In one embodiment, the merlons **210** are located directly beneath the snap attachment **186**C. The right side panel **160** may have similar merlons **210** on its interior side. In the embodiment illustrated in FIG. **18**, when the inside top panel **154** is positioned such that the receiver **174** on the side flange **170** of the inside top panel **154** is aligned with the snap attachment **186**C located at the top portion **196** of the left side panel **158**, the crenels **209** of the side flange **170** of the inside top panel **154** are also aligned

with the merlons **210** of the left side panel **158**. Then, when the inside top panel **154** is locked into place (such as by sliding the inside top panel **154** toward the front portion **192** of the left side panel **158**, as indicated by the arrow in FIG. **18**), the snap attachment **186**C is locked into the receiver **174** and the merlons **210** interlock with the crenels **209** to provide additional stability for the attachment between the inside top panel **154** and the left side panel **158** and the right side panel **160**.

FIG. **17**A is an assembled front perspective view of the fiber optic housing **152** of FIG. **16**. Once the left side panel **158** and the right side panel **160** have been tool-lessly attached to the bottom panel **156** and the inside top panel **154** has been tool-lessly attached to the left side panel **158** and the right side panel **160**, the fiber optic housing **152** has been tool-lessly assembled, as illustrated in FIG. **17**A.

The assembled fiber optic housing **152** can be quickly and easily unassembled by detaching the inside top panel **154**, the bottom panel **156**, the left side panel **158**, and the right side panel **160** from each other tool-lessly.

In one embodiment, the fiber optic housing **152** may also include the cover plate **162** (as seen in FIG. **16**) for the inside top panel **154**. As seen in FIG. **16**, the cover plate **162** may have a plurality of openings **212** configured such that when the cover plate **162** is positioned over the inside top panel **154**, the openings **212** fit over the standoffs **176** on the inside top panel **154** in order to provide a gap between the inside top panel **154** and the cover plate **162**. FIG. **17**B is an assembled front perspective view of the fiber optic housing **152** of FIG. **17**A with the cover plate **162** attached. In one embodiment, the cover plate **162** may be attached to the assembled fiber optic housing **152** by means of fasteners, with screws being one non-limiting example. In one embodiment, the fasteners extend through the grooves **202**, **206** to attach the cover plate **162** to the right and left side panels **158**, **160**.

Embodiments disclosed below include fiber optic housings having a removable top, and related components and methods. In one embodiment, a fiber optic housing is provided having a removable top. In one embodiment, the fiber optic housing comprises a top, a bottom, a right side, and a left side defining at least one interior chamber configured to support fiber optic equipment. The top comprises a base and a cover in one embodiment. The top is configured to provide a gap between the base and the cover such that at least one of the right side and the left side of the fiber optic housing is configured to be slidably engaged into and out of the gap. In this manner, the top can be easily removed to provide access to the interior of the fiber optic housing.

In this regard, FIGS. **19**A-**21**B disclose another embodiment, in which a removable top for a fiber optic housing is disclosed. The removable top allows easy access to internal features of the fiber optic housing at initial installation or afterwards. The removable top thus may provide an advantage over current fiber optic housing designs which are not removable since the removable top allows the technician or user easy access and a clear view of the working area inside the fiber optic housing. FIG. **19**A illustrates the removable top as it slides out of the fiber optic housing. FIG. **19**B illustrates the fiber optic housing after the removable top has been removed.

In one embodiment, the removable top on the fiber optic housing consists of a base and a cover plate capable of being fastened with pop-rivets or screws. In one embodiment, the removable top may be shaped in a way to provide a gap between the base and cover into which the side panel on the housing can slide. The side panel of the fiber optic housing has a release tab that engages and locks the removable top in place. In one embodiment, the removable top is made from any satisfactory metal. In other embodiments, the removable top can be one piece made out of plastic. In the embodiment illustrated in FIGS. **19**A-**21**B, the release tab is round, but the release tab can be different shapes in other embodiments. In one embodiment, the release tab may be located on a top side of the removable top, or on an underside of the removable top.

FIG. **19**A is a rear perspective view of a fiber optic housing **214** having a removable top **222** according to one embodiment. The fiber optic housing **214** has a bottom **216**, a right side **218**, and a left side **220**. The bottom **216**, the right side **218**, and the left side **220** together define at least one interior chamber **221** of the fiber optic housing **214** configured to support fiber optic equipment. The fiber optic housing **214** also comprises the removable top **222** in this embodiment. In one embodiment, the fiber optic housing **214** may be assembled by attaching the bottom **216**, the right side **218**, the left side **220**, and the removable top **222**. In one embodiment, the fiber optic housing **214** may be assembled tool-lessly as disclosed above with respect to FIGS. **14**-**18**. However, in other embodiments, the fiber optic housing **214** need not be assembled tool-lessly to have the removable top **222** as described herein.

The removable top **222** comprises a base **224** and a cover plate **226**. The cover plate **226** is attached to the base **224** such that a gap **228** exists between the base **224** and the cover plate **226**. The right side **218** may comprise a top flange **229**. The left side **220** may comprise a top flange **230**. The gap **228** between the base **224** and the cover plate **226** may be of a size that corresponds to the thickness of the top flanges **229** and **230**. In this manner, the removable top **222** may slide on and off the right side **218** and the left side **220**, where the gap **228** between the base **224** and the cover plate **226** allows the cover plate **226** of the removable top **222** to pass over the top flanges **229**, **230** and the base **224** of the removable top **222** to pass under the top flanges **229**, **230**. One or both of the top flanges **229**, **230** may have a release tab **232**. The cover plate **226** may have one or more holes **234** configured to receive the release tab(s) **232** when the removable top **222** is slid onto the right side **218** and the left side **220**. As the removable top **222** is slid onto the right side **218** and the left side **220**, the release tab(s) **232** selectably engages with the hole(s) **234** to hold the removable top **222** in place in the fiber optic housing **214**. If it is desired to remove the removable top **222**, the user will press the release tab(s) **232** down, allowing the release tab(s) **232** to be disengaged from the hole(s) **234** and allowing the removable top **222** to be slid out from the fiber optic housing **214**. In one embodiment, the release tab **232** is flexible and resilient, such that it is biased to move from a first position to a second position when a force is exerted on the release tab **232**, and then returns to the first position by itself when the force is no longer exerted. In another embodiment, the release tab **232** may be spring loaded. In one embodiment, as seen in FIG. **19**A, the release tab **232** is accessible from the top of the removable top **222**. Although the release tab **232** is pressed downward in the above embodiments, in other embodiments, the release tab **232** may be lifted up, pulled outward, pressed inward, or manipulated in other ways and/or directions to cause the release tab **232** to disengage from the hole(s) **234** and allow the removable top **222** to be slid out from the fiber optic housing **214**.

FIG. **19**A illustrates the removable top **222** sliding out of the fiber optic housing **214**. FIG. **19**B is a rear perspective view of the fiber optic housing **214** of FIG. **19**A after the removable top **222** is removed. This allows the user or technician access to the fiber optic cables, modules, cassettes, optical fibers, or other fiber optic apparatuses inside the fiber

optic housing **214**. FIG. **19**C illustrates an alternate embodiment of the release tab **232**. In this embodiment, the release tab **232** is accessible from an underside **235** of the removable top **222**. In another embodiment, the release tab **232** may be located on a top side of the removable top **222**.

FIG. **20**A illustrates an exploded front perspective view of an exemplary embodiment of the removable top **222**. FIG. **20**A illustrates how the removable top **222** of FIG. **19**A is assembled according to one embodiment. The removable top **222** is assembled using the base **224** and the cover plate **226**. The base **224** may have a plurality of standoffs **236** disposed on its top surface. In the embodiment of FIG. **20**A, the base **224** has a plurality of standoffs **236** arranged along a front edge **238** of the base **224**, a plurality of standoffs **236** arranged in a middle portion **240** of the base **224**, and a plurality of standoffs along a back edge **242** of the base **224**. The cover plate **226** has a plurality of openings **244** that correspond to the plurality of standoffs **236** in one embodiment. In the embodiment of FIG. **20**A, the cover plate **226** has a plurality of openings **244** arranged along a front edge **246** of the cover plate **226**, a plurality of openings **244** arranged in a middle portion **248** of the cover plate **226**, and a plurality of openings **244** along a back edge **374** of the cover plate **226**. The number of standoffs **236** and openings **244** may vary.

The standoffs **236** may be a predetermined height in one embodiment. In one embodiment, the standoffs **236** may be between approximately one eighth (⅛) of an inch tall and approximately one half (½) of an inch tall. In one embodiment, the standoffs **236** may be approximately one quarter (¼) of an inch tall. The cover plate **226** is attached to the base **224** by placing the openings **244** over the corresponding standoffs **236** in order to form the removable top **222** of FIGS. **19**A and **20**B (discussed below). In one embodiment, the standoffs **236** are configured to receive screws or other fasteners that will affix the cover plate **226** to the base **224**. In one embodiment, the base **224** may also have cutout sections **376** that are configured to receive rubber grommets **378**. The rubber grommets **378** can be used for access for fiber optic cables or optical fibers to be routed into and out of the fiber optic housing **214**.

When the cover plate **226** is attached to the base **224** to form the removable top **222**, the standoffs **236** help form the gap **228** between the base **224** and the cover plate **226** as seen in FIGS. **19**A and **20**A. The gap **228** allows the removable top **222** to be slid on and off of the fiber optic housing **214**.

FIG. **20**B illustrates an assembled front perspective view of an exemplary embodiment of the fiber optic housing **214** of FIG. **19**A as the removable top **222** is being reinstalled into the fiber optic housing **214**. As seen in FIG. **20**B, the removable top **222** can be slid back onto the fiber optic housing **214** such that the gap **228** allows the cover plate **226** of the removable top **222** to pass over the top flanges **229** and **230** of the right side **218** and left side **220** of the fiber optic housing **214** and the base **224** of the removable top **222** to pass under the top flanges **229**, **230**.

FIG. **21**A is a side view section cut of a side panel (such as the right side **218** or the left side **220** of the fiber optic housing **214** of FIGS. **19**A and **20**A) of a fiber optic housing configured to receive the removable top **222** of FIGS. **19**A, **20**A, and **20**B. FIG. **21**B is a side view of the gap **228** in the removable top **222** of FIGS. **19**A, **20**A, and **20**B configured to receive the side panel of the fiber optic housing. As discussed above, the right side **218** in FIG. **21**A has a top flange **229** of a thickness that corresponds to the gap **228** between the base **224** and the cover plate **226** of the removable top **222**. As illustrated in FIG. **21**B, the gap **228** is configured to correspond to the thickness of the top flange **229** such that the removable top **222** can slide along the top flange **229**, with the gap **228** receiving the top flange **229**. In this manner, the removable top **222** can be reinstalled into the fiber optic housing **214**.

FIG. **22** is a front perspective view of a fiber optic housing **256** illustrating rubber entry grommets **264**, **266**. The fiber optic housing **256** may be of any type and can be assembled in any manner. In one embodiment, the fiber optic housing **256** has a bottom (not illustrated in FIG. **22**), a left side **258**, a right side (not illustrated in FIG. **22**), and a top **260**. The fiber optic housing **256** also comprises a front door **262** in this embodiment. In one embodiment, the fiber optic housing **256** may be assembled by attaching the bottom, the left side **258**, the right side, and the top **260**. In one embodiment, the fiber optic housing **256** may be assembled tool-lessly as disclosed above with respect to FIGS. **14-18**. However, in other embodiments, the fiber optic housing **256** need not be assembled tool-lessly. The top **260** may or may not comprise a removable top as disclosed above with respect to FIGS. **19**A-**21**B. The fiber optic housing **256** has a plurality of rubber grommets **264** and **266**. In one embodiment, the fiber optic housing **256** may have rubber grommets **264** or **266** on the top and bottom rear and front, and left and right sides rear and front of the fiber optic housing **256**. The rubber grommets **264**, **266** may be in the form of a single piece of rubber, like the rubber grommets **264**, or they may be part of a jumper management device, like the rubber grommets **266**, which are disclosed in more detail below with respect to FIGS. **29** and **31-34**. The rubber grommets may be of any shape, including but not limited to rectangles, like the rubber grommets **264**, or circles, like the rubber grommets **266**. Rubber provides better protection than solid materials, especially on the edges, and provides a better seal to keep dust, insects, and rodents out of the housings. In one embodiment, the rubber grommets **264**, **266** may be easily removed to provide entry and exit points for fiber optic cables or optical fibers to be routed in and out of the fiber optic housing **256** to the appropriate locations.

FIG. **23** is a partial, front perspective view of the fiber optic housing **256** of FIG. **22**. The fiber optic housing **256** may include molded in flexible edge protection. A molded in flexible edge protection piece **268** is located around an opening **270** on one or more sides **272** of the fiber optic housing **256**, as illustrated in FIG. **23**. Fiber optic jumper cables or other fiber optic cables or optical fibers (not illustrated in FIG. **23**) may be routed out of the fiber optic housing **256** through the opening **270**, and the molded in flexible edge protection piece **268** offers protection for the fiber optic jumper cables. In addition, one or more side grommets **274** are molded onto the solid material of the side **272** for a strong bond with the lowest profile possible. The side grommets **274** also offer access points for fiber optic jumper cables or other fiber optic cables or optical fibers to be routed into or out of the fiber optic housing **256**.

The rubber grommets disclosed above with respect to FIGS. **22** and **23** allow for the routing of various fiber optic cables and optical fibers in and out of fiber optic housings. The fiber optic housings may also include various features to help better route and manage the fiber optic cables and optical fibers in and around the fiber optic housings. In one embodiment, the fiber optic housing may have a removable front section. The removable front section allows the fiber optic housing to be used for different applications and/or designs, as examples, where no jumper management is needed, or where a sealed version may be required. Further, the removable front section may comprise a removable front jumper management device with pass-through grommets. Fiber optic cables may be allowed to pass through using the pass-through grommets while keeping the fiber management within the

housing envelope. When removed, it allows for a greater volume of fiber jumpers to exit from the top and bottom, without sacrificing the space above the unit. Additionally, it allows pass-through of fiber optic cables or optical fibers on the top and bottom, instead of the top only like previous designs.

In this regard, embodiments disclosed below include removable fiber management sections for fiber optic housings, and related components and methods. In one embodiment, a fiber optic system is provided. The fiber optic system comprises a fiber optic housing defining at least one interior chamber configured to support fiber optic equipment. The fiber optic system also comprises a removable front section connected to the fiber optic housing and defining at least one front section interior chamber coupled to the at least one interior chamber of the fiber optic housing. The removable front section is configured to support at least one fiber management device to manage one or more optical fibers connected to fiber optic equipment disposed in the fiber optic housing.

In this regard, FIG. **24** illustrates a front perspective view of a fiber optic housing **276** with a removable front section **278** and perspective views of two (2) removable front section versions. The fiber optic housing **276** defines an interior chamber **279** configured to support fiber optic equipment. The removable front section **278** also defines a front section interior chamber **281** to support fiber management components for managing one or more optical fibers connected to the fiber optic equipment supported by the fiber optic housing **276**, as will be discussed in more detail below. In this embodiment, the removable front section **278** is attached to the fiber optic housing **276**. The removable front section **278** can also be removed from the fiber optic housing **276** when no longer needed or desired. Optical fibers can be managed in fiber management components disposed in the removable front section **278** before or after the removable front section **278** is attached to the fiber optic housing **276**. Further, optical fibers routed in fiber management devices disposed in the removable front section **278** can be unrouted or removed before or after the removable front section **278** is detached from the fiber optic housing **276**.

The removable front section **278** may come in different versions. In one embodiment, the removable front section **278** may include fiber management components in the form of a plurality of front jumper management devices **280** and an opening **270** disposed on both sides of the removable front section **278**. The front jumper management devices **280** allow optical fibers that are connected to fiber optic equipment supported in the fiber optic housing **276** to be routed and maintained. The removable front section **278** can be employed to provide capacity for employing such a fiber management component when the fiber optic housing **276** is either not able or is not configured to provide sufficient additional room for fiber management components. The openings **270** are both configured to provide fiber management by being configured to route one or more optical fibers connected to fiber optic equipment in the fiber optic housing **276** outside of the fiber optic housing **276** and to the sides of the removable front section **278**. When optical fibers are not routed through the openings **270**, a rubber seal **286** can be disposed in the openings **270**, as exemplified by the removable front section **278**B. The rubber seal **286** can fit in the place of the openings **270** in the removable front section **278**A to provide protection for the inside of the fiber optic housing **276** and to keep dust, insects, rodents, and other things out of the fiber optic housing **276**.

In this embodiment, the opening **270** includes a molded in flexible edge protection piece **268**, as exemplified by the removable front section **278**A. The flexible edge protection piece **268** protects optical fibers routed or otherwise disposed through the openings **270** from being damaged by kinking or bending against the edges of the openings **270** which may be sharp, especially if the fiber optic housing **276** is constructed from sheet metal as an example. The flexible edge protection piece **268** may be made from any type of material desired, including any type of polymer, rubber, plastic, etc. The flexible edge protection piece **268** may also be removable.

Fiber optic jumper cables or other fiber optic cables or optical fibers (not illustrated in FIG. **24**) may be routed out of the fiber optic housing **276** through the opening **270**, and the molded in flexible edge protection piece **268** offers protection for the fiber optic jumper cables. The front jumper management devices **280** aid in fiber management and routing, as will be described in more detail below, with respect to FIGS. **29-34**. The front jumper management devices **280** may be easily removable in one embodiment. The front jumper management devices **280** may be located on a top portion **282** and/or on a bottom portion **284** of the removable front section **278**.

In another embodiment, the removable front section **278** may also include a fiber management component in the form of a plurality of front jumper management devices **280** to route optical fibers along and through the bottom and top panels **298**, **290** of the removable front section **278**. As will also be discussed in more detail below with regard to FIGS. **31-33**, the front jumper management devices **280** may include a plurality of fiber routing guides in the form of routing clips **356** (see also FIG. **31**) configured to route optical fibers connected to fiber optic equipment supported in the fiber optic housing **276**. As will also be discussed in more detail below with regard to FIGS. **31-33**, the front jumper management devices **280** may also include openings to allow optical fibers to be routed through bottom and top sections **290**, **298** away from the removable front section **278**. Although in the embodiment of FIG. **24**, the removable front section **278**A also has front jumper management devices **280**, in other embodiments, the removable front section **278**A or **278**B may not have any front jumper management devices **280**, or may have less front jumper management devices **280**.

FIG. **25** illustrates an exploded, front perspective view of the removable front section **278** of a fiber optic housing. The removable front section **278** has a base **288** which is attached to a bottom panel **290**. A plurality of clips **292** for routing optical fibers may be configured to be attached to the bottom panel **290** of the base **288**. A left side panel **294** with an opening **270** having a molded in flexible edge protection piece **268** is configured to be attached to the bottom panel **290**. A symmetrical right side panel **296** with an opening **270** having a molded in flexible edge protection piece **268** is also configured to be attached to the bottom panel **290**. In one embodiment, the left side panel **294** and the right side panel **296** may be attached to the bottom panel **290** tool-lessly in a manner as described above with respect to FIGS. **14-18**.

With continued reference to FIG. **25**, a top panel **298** having a plurality of standoffs **300** disposed on its top surface is configured to be attached to the left side panel **294** and to the right side panel **296**. In one embodiment, the top panel **298** may be attached to the left side panel **294** and to the right side panel **296** tool-lessly in a manner as described above with respect to FIGS. **14-18**. Alternative fiber management components in the form of a plurality of clips **292** for routing optical fibers may be configured to be attached to the top panel **298** for routing optical fibers. A cover plate **302** having

openings **304** disposed thereon is configured to be attached to the top panel **298**. The openings **304** on the cover plate **302** are configured to fit over the standoffs **300** on the top panel **298**. In one embodiment, a fastener (not illustrated), including but not limited to a screw or pop rivet, will pass through the openings **304** into the standoffs **300** in order to attach the cover plate **302** to the top panel **298**. In one embodiment, the top panel **298** and the cover plate **302** have corresponding cutout sections **306**. The cutout sections **306** are configured to receive rubber grommets **308**, as illustrated in the embodiment of FIG. **25**, or front jumper management devices **280** in another embodiment.

Still referring to FIG. **25**, L-shaped brackets **310** are configured to be attached to each of the left side panel **294** and the right side panel **296**. The L-shaped brackets **310** may be attached to the left and right side panels **294**, **296** by any means, including by screws or pop rivets. The L-shaped brackets **310** may have openings **311**A on one flange of the L-shaped brackets **310** to attach the L-shaped brackets **310** to the left and right side panels **294**, **296**. The L-shaped brackets **310** may also have openings **311**B and **311**C on another flange of the L-shaped brackets **310** to attach the removable front section **278** to a fiber optic housing, as described more fully below in connection with FIG. **27**. In one embodiment, the L-shaped brackets **310** may take a form similar to the mounting brackets disclosed above (see, e.g., FIG. **6**) and the left side panel **294** and the right side panel **296** may have snap attachment features as disclosed above (see, e.g., FIG. **6**), and the L-shaped brackets **310** may be tool-lessly attached to the left side panel **294** and the right side panel **296**. The removable front section **278** may also have a door **312**. The door **312** is configured to attach to the base **288** and may be opened and closed.

Once the various components of the removable front section **278** of FIG. **25** are assembled, the removable front section **278** will look like the removable front section **278** of FIG. **26**A. FIG. **26**A illustrates a front perspective view of the removable front section **278** of a fiber optic housing with the door **312** closed. The door **312** may have one or more latches **314** for opening and closing the door **312**.

FIG. **26**B illustrates a front perspective view of the removable front section **278** with the door **312** open. With the door **312** open, the plurality of clips **292** are visible. The plurality of clips **292** are used for routing control and management of fiber optic cables and optical fibers, including but not limited to fiber optic jumper cables. The fiber optic jumper cables, or other fiber optic cables and optical fibers, may be routed through one or more of the plurality of clips **292** and in or out of the openings **270** on either side of the removable front section **278**. In addition, the rubber grommets **308** may be removed to another access point for the fiber optic jumper cables, or other fiber optic cables and optical fibers, to be routed in and out of the removable front section **278**. In one embodiment, the door **312** may also comprise one or more lips **315**. The lips **315** are configured to allow flip cards (not illustrated) to be removably attached to the lips **315**.

FIG. **26**C illustrates a top front perspective view of the removable front section **278** with the door **312** removed. FIG. **26**D illustrates another front perspective view of the removable front section **278** with the door **312** removed. Referring to FIG. **26**C, the top panel **298** has a plurality of receivers **316** disposed thereon. The plurality of receivers **316** are configured to receive the plurality of clips **292**. In one embodiment, each of the plurality of clips **292** has a hook **318** that is configured to selectively fit into one of the plurality of receivers **316**, thereby attaching the clip **292** to the top panel **298**. Each of the plurality of clips **292** is inserted from underneath the top panel **298** such that the hook **318** on each respective clip **292** fits into one of the plurality of receivers **316**, locking the respective clip **292** into the respective receiver **316**. The bottom panel **290** may also have a plurality of receivers like the receivers **316** that are configured to receive a plurality of clips **292** such that a plurality of clips **292** may also be attached to the bottom panel **290**.

FIG. **27** illustrates a front perspective view of the removable front section **278** being attached to a fiber optic housing **320**. The fiber optic housing **320** may be of any type and may be assembled in any manner. In one embodiment, the fiber optic housing **320** may be assembled tool-lessly as disclosed above with respect to FIGS. **14-18**. The fiber optic housing **320** may have mounting brackets **322** attached to each side of the fiber optic housing **320**. In one embodiment, the mounting brackets **322** may be like any of the mounting brackets disclosed above in FIGS. **4-8** and may be attached to the fiber optic housing **320** as disclosed therein. The mounting brackets **322** may have a plurality of keyhole-shaped openings **324**. In one embodiment, there may be one keyhole-shaped opening **324** at a top **326** of each of the mounting brackets **322** and one keyhole-shaped opening **324** at a bottom **328** of each of the mounting brackets **322**. In one embodiment, the mounting brackets **322** may also include a plurality of oval-shaped openings **330** and a plurality of circular holes **332**. In one embodiment, the plurality of circular holes **332** may be located at or near a center **334** of the each of the mounting brackets **322**. In other embodiments, the keyhole-shaped openings **324**, the oval-shaped openings **330** and the circular holes **332** may be different shapes. The mounting brackets **322** may also have a plurality of recesses **336**, which allow a space for other apparatuses, such as the removable front section **278**, to be attached to the fiber optic housing **320**, as described more fully below.

With continued reference to FIG. **27**, including the inset view, the removable front section **278** has a plurality of tabs **338** at a top **340** and a bottom **342** of each of the left side panel **294** and the right side panel **296** (although only the tabs **338** on the right side panel **296** are visible in FIG. **27**). In order to attach the removable front section **278** to the fiber optic housing **320**, the removable front section **278** is positioned such that the tabs **338** fit into the recesses **336** of the mounting brackets **322**. This will align the openings **311**B of the L-shaped bracket **310** of the removable front section **278** with the circular holes **332** of the mounting bracket **322**, and will align the openings **311**C of the L-shaped bracket **310** with the oval-shaped openings **330** of the mounting bracket **322**. A fastener, such as a screw or pop rivet, may then be placed through one or more of the openings **311**B of the L-shaped bracket **310** of the removable front section **278** and through the circular holes **332** of the mounting bracket **322** to securely attach the removable front section **278** to the fiber optic housing **320**.

FIG. **28** illustrates a front perspective view of the removable front section **278** attached to a fiber optic housing **344** with fiber optic jumpers being routed out of sides of the removable front section **278**. The door **312** is open, allowing access to the inside of the removable front section **278**. The fiber optic housing **344** in the embodiment of FIG. **28** has fiber optic panels **346** loaded in the removable front section **278**, although any sort of fiber optic apparatuses, including but not limited to fiber optic modules and cassettes, may be loaded into the removable front section **278**. Fiber optic jumpers **348** are connected to the fiber optic panels **346** and may be routed through the clips **292** and then out of the openings **270** on either side of the removable front section **278**.

FIGS. **29-34** illustrate various embodiments of a front jumper management device for use with a fiber optic housing or a removable front section attached to a fiber optic housing.

FIG. **29** is a front perspective view of a fiber optic housing **350** illustrating a removable front section **278** having a plurality of removable front jumper management devices **280** with grommets **352**, as previously mentioned in FIG. **24**. The front jumper management devices **280** aid in fiber management and routing. The front jumper management devices **280** may be easily removable in one embodiment. The front jumper management devices **280** may be located on the top portion **282** and/or on the bottom portion **284** of the removable front section **278**.

In one embodiment, the front jumper management devices **280** comprise a plurality of grommet/clip assemblies **354** for use with the fiber optic housing **350** or the removable front section **278**. Each of the grommet/clip assemblies **354** may include a clip **356** and a grommet **352**. The grommet **352** may be made of rubber in one embodiment. In one embodiment, the grommet/clip assembly **354** may be removably mounted in openings **355** on the front of the fiber optic housing **350** on both the top and the bottom. The grommet/clip assembly **354** may be removably mounted to the fiber optic housing **350** by sliding it into the opening **355** in the fiber optic housing **350**.

The front jumper management devices **280** may be removably mounted on the inside of the fiber optic housing **350** to aid in fiber management, or on the outside of the fiber optic housing **350** to serve as an external fiber management device or component, as seen in FIG. **30**.

FIG. **30** is a front perspective view of the fiber optic housing **350** of FIG. **29** illustrating fiber management of optical fiber jumpers **358** using the front jumper management devices **280**. The door **312** is open, allowing access to the inside of the removable front section **278**. The fiber optic housing **350** in the embodiment of FIG. **30** has fiber optic panels **346** loaded in the removable front section **278**, although any sort of fiber optic apparatuses, including but not limited to fiber optic modules and cassettes, may be loaded into the removable front section **278**. Although the embodiment of FIG. **30** illustrates a removable front section **278**, in other embodiments, the fiber optic housing **350** may not have a removable front section **278**, and the fiber optic panels **346** may be loaded into the fiber optic housing **350** itself.

The optical fiber jumpers **358** are connected to the fiber optic panels **346** and, in one embodiment, may be routed out of the fiber optic housing **350** through the openings **270** on either side of the removable front section **278**. In one embodiment, certain of the optical fiber jumpers **358** may be routed out of the fiber optic housing **350** through the grommets **352** of the front jumper management devices **280**. For example, in FIG. **30**, some of the optical fiber jumpers **358** are routed from the fiber optic panels **346** directly through the grommets **352** of one of the front jumper management devices **280**. In one embodiment, the optical fiber jumpers **358** may be first passed through the grommet/clip assemblies **354** of the front jumper management devices **280** and then through the openings **270** on either side of the removable front section **278**. For example, some of the optical fiber jumpers **358** are routed through the clip **356**B of one of the front jumper management devices **280** and through the openings **270** on the left side of the removable front section **278**.

By locating front jumper management devices **280** on both the top portion **282** and/or on the bottom portion **284** of the removable front section **278**, a variety of options for optical fiber routing and management are provided. For example, in FIG. **30**, some of the optical fiber jumpers **358** are routed through the clip **356**B and then through the clip **356**C of one of the front jumper management devices **280** at the top portion **282** and then through the openings **270** on the right side of the removable front section **278**. Some of the optical fiber jumpers **358** are routed through only one of the clips (clip **356**C) of the one of the front jumper management devices **280** at the top portion **282** before being routed through the openings **270** on the right side of the removable front section **278**. Finally, some of the optical fiber jumpers **358** are routed through one or more of the clips (clips **356**D and **356**E) of the one of the front jumper management devices **280** at the bottom portion **284** before being routed through the openings **270** on the right side of the removable front section **278**. Although not illustrated in FIG. **30**, certain of the optical fiber jumpers **358** could be routed through one or more of the grommets **352** on the front jumper management devices **280** at the bottom section **284** without being routed through the openings **270**.

FIG. **31** is a front perspective view of the front jumper management device **280** to illustrate more detail for this particular embodiment of a fiber management component with the pass-through grommets of FIGS. **29** and **30**. In one embodiment, as illustrated in FIG. **31**, the front jumper management device **280** may comprise the grommet/clip assembly **354**. The grommet/clip assembly **354** may include the routing clips or clips **356** and the grommets **352** mounted in openings or ports **360** to allow optical fibers to be routed through the grommet/clip assembly **354**. The ports **360** are provided to allow optical fibers to be routed therethrough as previously discussed. If optical fibers are routed through the ports **360**, the appropriate grommets **352** are removed. The grommets **352** are removable and close off the ports **360** to prevent dust or debris from entering into the fiber optic housing or removable front section, as examples, when the ports **360** are not used to route optical fibers. The grommets **352** may be made from any type of material, including a flexible material. The grommets **352** may be made from any type of polymer or rubber, as additional non-limiting examples. In one embodiment, the clips **356** may be routing clips/fiber holders.

In this embodiment, as illustrated in FIG. **31**, a plurality of clips **356** may be disposed in a base **362**, with one clip **356** disposed on a first end **365** of the base **362** and another clip **356** disposed on a second end **367** of the base **362**. Also in this embodiment, the clip **356** is comprised of a first arcuate member **369** having a first end **371** attached to the base **362** and a second end **373** adjacent a second end **375** of a second member **377** having a first end **379** attached to the base **362**. The first arcuate member **369** and the second member **377** may be flexible. In this embodiment, the second end **373** of the first arcuate member **369** abuts against the second end **375** of the second member **377** when a compression force F**1** is not applied inward to the first arcuate member **369** towards the second member **377**. The second end **373** of the first arcuate member **369** is configured to separate from the second end **375** of the second member **377** when the compression force F**1** is applied inward to the first arcuate member **369** towards the second member **377**.

The grommet/clip assembly **354** may also comprise the base **362** with one or more mounting holes **364**, as illustrated in FIG. **31**, to allow the grommet/clip assembly **354** to be mounted to a fiber optic housing. In this embodiment, the clips **356** are attached to the base **362**. The mounting holes **364** may be used for fasteners (not illustrated), such as a screw, pop rivet, or a plunger fastener, to removably attach the grommet/clip assembly **354** to a fiber optic housing. The grommet/clip assembly **354** retains optical fiber jumpers (like the optical fiber jumpers **358** in FIG. **30**) while creating a

pathway to routing fibers that are terminated in optical connectors. In one embodiment, the grommet/clip assembly **354** may be removably attached to a fiber optic management panel, and may be installed in the same location as a connector panel. In another embodiment, as illustrated in FIG. **29**, the grommet/clip assembly **354** may be removably mounted in the openings **355** on the front of the fiber optic housing **350** on both the top and the bottom. The grommet/clip assembly **354** may be removably mounted to the housing by sliding it into the opening **355** in the fiber optic housing **350**.

The grommet/clip assembly **354** may also have features that allow it to be installed in different orientations and in different locations. FIG. **32** illustrates how front jumper management devices with grommets can be mounted on their sides to create horizontal fiber management outside the fiber optic housing. In the embodiment of FIG. **32**, the grommet/clip assembly **354** at the top of the fiber optic housing **350** is removably mounted on its side to create horizontal fiber management outside the fiber optic housing **350**. This will use a 1U rack unit space of 1.75 inches. However, the grommet/clip assembly **354** may be removed to allow fiber optic housings to be stacked directly on top of each other and still maintain the pass-through feature.

Further, the grommet/clip assembly **354** may be mounted in the same location as a connector panel using the same mounting hardware as the connector panels. FIG. **33** illustrates how a front jumper management device with grommets may be mounted in a fiber optic housing in place of a fiber optic panel to allow for fiber management. In the embodiment of FIG. **33**, a 1U fiber optic housing **366** has a plurality of openings **368**. A fiber optic panel **370** may be placed in one of the plurality of openings **368**. In the other opening **368**, a front jumper management device **280** comprising one or more grommet/clip assemblies **354** is positioned horizontally. The grommet/clip assembly **354** may also comprise a base **362** with one or more mounting holes **364**, as illustrated in FIG. **31**, to allow the grommet/clip assembly **354** to be mounted to the fiber optic housing **366**. A fastener, such as a plunger fastener **372** as illustrated in FIG. **33**, may be used to removably attach the grommet/clip assembly **354** to the fiber optic housing **366**. In other embodiments, different fasteners, such as a screw or pop rivet, may be used in place of the plunger fastener **372**.

The front jumper management device **280** with the grommet/clip assembly **354** disclosed above may be removably attached to a fiber optic housing. The end user may configure the front jumper management device **280** in multiple ways or remove it when it is not needed. Various other ways of mounting the front jumper management device **280** are possible, including but not limited to sliding the front jumper management device **280** into a cutout in a wall of a fiber optic housing, installing the front jumper management device **280** on its side using snaps that latch into a cutout in a wall of a fiber optic housing, or installing the front jumper management device **280** using plungers in the same location as a fiber adapter panel or module. Additionally, the grommets **352** in the grommet/clip assembly **354** allow fiber to transition in any direction (including, but not limited to, the rear, up, or down) depending on the orientation of the grommet/clip assembly **354**, as seen in FIG. **30** above.

FIG. **34** is a perspective view of an alternative fiber optic housing **374** configured to support fiber optic modules **376**. In one embodiment, the fiber optic housing **374** may also support fiber optic panels (like fiber optic panels **378** illustrated in FIG. **36**A) interchangeably by employing a removable panel clip (which is disclosed more fully in FIGS. **37**A-**37**G). The fiber optic housing **374** is configured to support fiber optic equipment in a vertical orientation. FIG. **34** illustrates the fiber optic housing **374** supporting the fiber optic modules **376**. If it desired to provide fiber optic panels **378** in the fiber optic housing **374**, removable panel clips **380** (see FIGS. **37**A-**37**G) can be installed in a base **382** and a top **384** of the fiber optic housing **374**, as illustrated in FIGS. **35**A-**35**C.

FIGS. **35**A-**35**C are perspective, perspective close-up, and perspective close-up cut section views, respectively, of the removable panel clip **380** installed in the fiber optic housing **374** to enable the fiber optic housing **374** to support fiber optic panels **378** and fiber optic modules **376** interchangeably. The removable panel clips **380** may be installed in a front **374**A of the fiber optic housing **374**, or may be installed in a rear **374**B of the fiber optic housing **374**. The base **382** contains receivers **386** in the form of openings to receive and secure a flange **388** of the removable panel clip **380** (see FIGS. **37**A-**37**G). The removable panel clip **380** is secured to the receiver **386** in the base **382**, as described more fully below.

FIG. **36**A is a perspective view of the fiber optic housing **374** in FIG. **35**A with removable panel clips **380** installed in the base **382** and the top **384** to be able to support the fiber optic panels **378**. FIG. **36**B is a perspective view of the fiber optic housing **374** in FIG. **35**A with removable panel clips **380** installed and inserts **390** provided in the form of push pins of the fiber optic panels **378** inserted into receptacles **392** of the removable panel clips **380** to support the fiber optic panels **378** in the fiber optic housing **374**. In another embodiment, the inserts **390** may be provided in the form of plungers

As illustrated in FIGS. **37**A-**37**G, the removable panel clip **380** includes the flange **388**. The flange **388** is configured to be inserted into the receiver **386** of the base **382** (FIGS. **35**A-**35**C) to attach the removable panel clip **380** to the base **382**. The flange **388** in this embodiment is circular-shaped, but other shapes can be provided. The flange **388** is disposed in a first side **394** of the removable panel clip **380**. A receptacle **392** disposed in a second side **396** of the removable panel clip **380** is configured to receive the insert **390** of a fiber optic panel **378**, as illustrated in FIGS. **36**A-**36**B. The first side **394** may be generally at a right angle to the second side **396** in this embodiment.

Referring to FIGS. **35**B and **35**C as well as FIGS. **37**A-**37**G, the flange **388** of the removable panel clip **380** is configured to be inserted into a first area **398** of the receiver **386** of the base **382** and slid into a second area **400** of the receiver **386** to attach the removable panel clip **380** to the base **382**. A standoff or extender **402** is disposed between the flange **388** and the first side **394** to extend the flange **388** a distance away from the first side **394** so the flange **388** can be inserted into the receiver **386** in the base **382**. The flange **388** can then be slid behind the second area **400** of the receiver **386**, which has an opening size less than the size of the flange **388**.

The flange **388** cannot be removed from the receiver **386** unless and until the flange **388** is slid back to the first area **398** of the receiver **386**, which has an opening size that will allow the flange **388** to be removed from the receiver **386**. A protrusion **404** is also disposed in the first side **394** of the removable panel clip **380** to be disposed into the second area **400** of the receiver **386** to further secure the removable panel clip **380** to the base **382**. In one embodiment, in order to remove the flange **388** from the receiver **386**, the removable panel clip **380** is slightly lifted in a vertical direction until the protrusion **404** overcomes the base **382**. In one embodiment, the removable panel clip **380** can also be installed in the base **382** in a position one hundred eighty (180) degrees from the orientation discussed above and shown in FIGS. **35**B and **35**C to allow the fiber optic panel or fiber optic module/cassette disposed therein to move independently.

FIG. **38** is a perspective view of another removable panel clip **406** installed in a fiber optic housing **408** to enable the fiber optic housing **408** to interchangeably support fiber optic panels and fiber optic modules. FIG. **39**A-**39**D illustrate bottom, side, front, and back views, respectively, of the removable panel clip **406** in FIG. **38**. The removable panel clips **406** are configured to be attached to a rail system **410** disposed in the fiber optic housing **408** to attach the removable panel clips **406** to the fiber optic housing **408** to support fiber optic panels. The rail system **410** is configured to support fiber optic modules in the fiber optic housing **408** when the removable panel clip **406** is not attached to the rail system **410**. In this regard, the removable panel clips **406** each comprise a groove **409** configured to receive a rail **412** disposed in the fiber optic housing **408** to attach the removable panel clips **406** to the fiber optic housing **408**. Like the removable panel clip **380**, the removable panel clip **406** contains a receptacle **413** disposed therein that is configured to receive an insert in the form of a push pin or plunger from a fiber optic panel to secure the fiber optic panel to the removable panel clip **406** and thus the fiber optic housing **408**. Protrusions **414** are disposed in the removable panel clip **406**, as illustrated in FIG. **38**, and are configured to engage with receivers **416** to further secure the removable panel clips **406** to the fiber optic housing **408**. A support member **418** is disposed or provided as part of the removable panel clip **406** to provide structural support, as illustrated in FIGS. **39**A and **39**B.

The base of the fiber optic housing (such as the base **382** of the fiber optic housing **374** in FIGS. **35**A and **36**A, or the base of the fiber optic housing **408** in FIG. **38**) may be configured to support either fiber optic panels or fiber optic modules/cassettes. To support fiber optic panels, a receiver (like the receiver **416** in FIG. **38**) is disposed in the fiber optic housing **374** or **408** to receive the removable panel clips **406**. If a fiber optic module(s) is desired to be supported, the removable panel clips **406** are not employed. Instead, the fiber optic module(s) includes a rail guide that is configured to receive a rail disposed in the fiber optic housing **374** of FIGS. **35**A and **36**A or the fiber optic housing **408** in FIG. **38**.

FIGS. **40**A-**40**D illustrate various views of exemplary rails **412** to be used in the fiber optic housing **408** of FIG. **38**. In one embodiment, the rail **412** has three sections **412-1**, **412-2**, **412-3** formed by two notches **415-1**, **415-2**. The notches **415-1**, **415-2** are used to lock fiber optic modules or cassettes onto the rail **412**, as will be discussed in more detail below. The rail **412** may also have a pair of latches **419-1**, which may extend from the section **412-2** in one embodiment, as illustrated in FIGS. **40**A-**40**D. The rail **412** may have a groove **417** at one end of the section **412-1**. The rail **412** may also have a latch **419-2** at one end of the rail **412**, such as at the end of portion **412-3**, as illustrated FIGS. **40**A-**40**D. The latches **419-1**, **419-2** may be used to attach the rail **412** to the fiber optic housing **374** of FIGS. **35**A and **36**B, or the fiber optic housing **408** of FIG. **38**. In one embodiment, the latches **419-1**, **419-2** may fit into receivers **383** disposed in the base **382** of the fiber optic housing **374** of FIGS. **35**A and **36**B and be used to attach the rail **412** to the fiber optic housing **374**. The latches **419-1**, **419-2** may be flexible and resilient such that they provide biasing to allow the latches **419-1**, **419-2** to extend into the receivers **383** to secure the rail **412** to the base **382** of the fiber optic housing **374** of FIGS. **35**A and **36**B. FIGS. **41**A and **41**B are front perspective and side views, respectively, of an exemplary fiber optic module or cassette **422** that may be mounted on a rail in the fiber optic housing **408** of FIG. **38**. As illustrated in the front perspective and top views of the fiber optic module/cassette **422** in FIGS. **41**A and **41**B, respectively, the fiber optic module/cassette **422** includes a housing **422**H that includes a first end **422-1** and a second end **422-2**. Rails guides **421**A, **421**B are disposed in the housing **422**H on the first end **422-1** and the second end **422-2** of the housing **422**H, respectively. Thus, when a rear portion **422**R of the fiber optic module/cassette **422** is inserted onto a rail or rails **412** disposed on the fiber optic housing **408**, the rail guides **421**A, **421**B of the fiber optic module/cassette **422** are aligned with the rails **412**. The rail guides **421**A, **421**B receive the rails **412**. The fiber optic module/cassette **422** can be slid back from a front **408**F of the fiber optic housing **408** to a rear **408**R of the fiber optic housing **408** (FIG. **38**), until a front side **422**F of the fiber optic module/cassette **422** locks into place in one of the notches **415-1** or **415-2** on the rail **412**.

The fiber optic module/cassette **422** can be locked into place on the rails **412** by protrusions **401**A, **401**B provided in a latching system **403**A, **403**B disposed in the rail guides **421**A, **421**B, respectively. As illustrated in FIGS. **41**A and **41**B, the protrusions **401**A, **401**B are each configured to be secured into notches **415-2** disposed in the rails **412** to lock the fiber optic module/cassette **422** into place. When it is desired to release the fiber optic module/cassette **422** from the rail **412**, latches **405**A, **405**B can be pushed inward toward the fiber optic module/cassette **422** to release the protrusions **401**A, **401**B from the notches **415-2** to allow the rail guides **421**A, **421**B of the fiber optic module/cassette **422** to be moved about the rails **412** of the fiber optic housing **408**. In one embodiment, the fiber optic module/cassette **422** might be slid onto the rail **412** such that the protrusions **401**A, **401**B lock into place in the notch **415-1** instead of notches **415-2**.

The fiber optic housing **408** illustrated in FIG. **38** thus provides integrated tracks or rails to house large splice modules, with removable panel clips to hold fiber optic panels or smaller fiber optic modules. The integrated tracks or rails allow the fiber optic housing to work with any panel designed for the housing, for example a 4U housing, simply by changing the adapter to match the desired panel. The rails allow larger fiber optic modules to slide in place for maximum use of the available space inside the fiber optic housing. The removable panel clips also allow for multiple mounting locations in the front to back orientation, allowing the user to move the fiber optic panel to a more recessed position when needed for the use of components which may require additional space, including, as one non-limiting example, in-line attenuators or other apparatuses.

Embodiments disclosed below also include door fiber management for fiber optic housings, and related components and methods. In one embodiment, a fiber optic housing is provided. The fiber optic housing comprises an enclosure defining at least one interior chamber configured to support fiber optic equipment. The fiber optic housing also comprises at least one door attached to the enclosure and configured to seal off at least a portion of the at least one interior chamber when the door is closed. The fiber optic housing also comprises at least one fiber management component disposed in the at least one door. The door can be a front door, a rear door, both a front and rear door, or any other door attached or provided as part of the fiber optic housing. The fiber management component can be any type of fiber management device or component, including but not limited to a slack storage device or component, a routing guide, and a fan-out body holder.

In this regard, FIG. **42** is a rear view of a fiber optic housing **420** with a rear door **424** opened that is fully loaded with fiber optic modules/cassettes **422** attached to rails. In one embodiment, the fiber optic modules/cassettes **422** may be fiber optic splice cassettes. The fiber optic housing **420** is fully loaded

with fiber optic modules/cassettes **422**. In other embodiments, the fiber optic housing **420** may be loaded with fiber optic panels, fiber optic connectors, or fiber optic modules. The fiber optic housing **420** has the rear door **424** that is opened to allow access to the fiber optic modules/cassettes **422**. The fiber optic housing **420** in this embodiment defines an enclosure **423** defining an interior chamber **425** configured to support fiber optic equipment **427** disposed therein. The rear door **424** is attached to the enclosure **423** and configured to seal off at least a portion of the interior chamber **425** when the rear door **424** is closed against the enclosure **423**.

In fiber optic housings, fiber cable management is commonly done inside the rear on the bottom of the fiber optic housing. Optical fiber slack storage is located on the bottom and top in the back section of the fiber optic housing **420**. Sometimes that space becomes very limited, resulting in poor fiber management. In one embodiment as disclosed herein, the rear door **424** may be adapted to be used in fiber optic housings to store slack fiber optic cables and to provide locations for strain relief. In addition, the rear door **424** may also be used to hold fiber transition boxes. Having additional storage on the rear door **424** frees up space on the inside of the fiber optic housing for better access to the fiber optic modules. This is especially true when large splice modules are used, as there is less room for slack storage of optical fibers on the bottom or top, so storage on the rear door provides the storage space that otherwise would have been located in the bottom or the top of the fiber optic housing. When the rear door **424** is opened, the optical fiber bundle is rotated out of the way of the user providing safer access to the rear of the fiber optic modules.

With continuing reference to FIGS. **42** and **43**B-**43**C, a fiber management component in the form of a slack storage component **429** is disposed in an inside surface **431** of the rear door **424**. The slack storage component **429** is designed to store slack of optical fibers **442** connected to the fiber optic equipment **427** disposed in the fiber optic housing **420**, as illustrated in FIGS. **43**B and **43**C. In this embodiment, the slack storage component **429** is comprised of two (2) retainers **444**, each comprised of two (2) flanges **433**A, **433**B. The retainers **444** are disposed in a perimeter of the rear door **424** in this embodiment. The flanges **433**A, **443**B are each comprised of a first member **435**A, **435**B disposed in a first plane and attached to the interior surface **431** of the rear door **424**, which serves as a base, and a second member **437**A, **437**B attached to the first member **435**A, **435**B, in a second plane intersecting with the first plane to form a slack storage area **439**A, **439**B within the flanges **433**A, **433**B. Other fiber management components, including routing guides, could also be disposed in or on the rear door **424**, including the interior surface **431**, or an external surface of the rear door **424**. Further, the fiber management components could be disposed on any door of the fiber optic housing **420**, including the rear door **424**, or a front door, as examples.

FIG. **43**A is a rear perspective view of a fiber optic housing **428** mounted in an equipment rack illustrating an exemplary embodiment of fiber management components in the form of fiber slack storage and fiber management on a rear door **426** of the fiber optic housing **428**. FIG. **43**A illustrates optical fiber slack storage and management on a rear door **426** of the fiber optic housing **428**. The rear door **426** may pivot downward about a pivot point **430** between the rear door **426** and the fiber optic housing **428** when the rear door **426** is opened. In one embodiment, the pivot point **430** may be a hinge. The rear door **426** may have a plurality of routing clips **432** disposed thereon. The rear door **426** may also have a plurality of lips **434** disposed thereon in one embodiment. In one embodiment, one or more transition boxes **436** may be attached to the rear door **426** via a respective one of the lips **434**. In another embodiment, a flip card (not illustrated) may be attached to the rear door **426** via the lips **434**. The rear door **426** may also have one or more strain relief locations **438** located near the pivot point **430** in one embodiment.

An optical fiber or fiber optic cable may be routed to the rear of the fiber optic housing **428**. In the embodiment of FIG. **43**A, the fiber optic cable is a buffer tube with one or more optical fibers **442** connected to one or more of the fiber optic modules/cassettes **422**. The optical fibers **442** may be strain-relieved at the strain relief location **438** near the pivot point **430** of the rear door **426** to minimize fiber movement as the rear door **426** is opened. The optical fibers **442** will be routed near the pivot point **430**. The routing clips **432** may hold the optical fibers **442** in a loop greater than the minimum bend radius of the optical fibers **442**. When ribbon fiber is used, the transition boxes **436** may be used to fan out the ribbon into individual fibers when connectorized. The rear door **426** also has provisions (the lips **434**) to hold these fan-out or transition boxes **436**.

The fiber optic housing **428** may be any size. Additionally, the fiber optic housing **428** does not need to be an equipment rack-mounted fiber optic housing. For example, the fiber optic housing **428** may be a wall mount fiber optic housing. The rear door **426** may be made out of metal or plastic.

With continuing reference to FIG. **43**A, the fiber management components, including the routing clips **432** are disposed in a pedestal or base **445** attached to an interior surface **447** of the rear door **426**. In this manner, the routing clips **432** are disposed above the rear door **426** in a raised manner. The base **445** may include one or more recesses **449** to allow the base **445** to be disposed around and not interfere with any other components in the rear door **426**. The base **445** can be removed if additional fiber management components are not needed or desired to be disposed on the rear door **426**. The base **445** may be of any shape desired, including but not limited to rectangular and circular or elliptical shaped. The base **445** may be attached using one or more fasteners to the rear door **426**. Although not illustrated, the base **445** and the fiber management components disposed therein may also be disposed in the front door.

FIG. **43**B is a rear perspective view of the fiber optic housing **428** mounted in an equipment rack illustrating an alternate embodiment of fiber slack storage and management on the rear door **426** of the fiber optic housing **428** having fiber optic splice cassettes. In the embodiment of FIG. **43**B, the fiber optic cable being routed to the rear of the fiber optic housing **428** is a buffer tube **440** with one or more optical fibers **442** is connected to one or more of the fiber optic modules/cassettes **422**. In the embodiment of FIG. **43**B, the optical fibers **442** will be routed near the pivot point **430**. The optical fibers **442** are held in a loop greater than the minimum bend radius of the optical fibers **442** in the retainers **444** located at the bottom of the rear door **426**.

FIG. **43**C is a rear perspective view of the fiber optic housing **428** mounted in an equipment rack illustrating an alternate embodiment of fiber slack storage and management on the rear door **426** of the fiber optic housing **428** having fiber optic panels. In the embodiment of FIG. **43**C, the fiber optic cable being routed to the rear of the fiber optic housing **428** is the buffer tube **440** with one or more optical fibers **442**. The optical fibers **442** transition to a 900 micron optical fiber **446** which is connected to one or more of the fiber optic modules/cassettes **422**. In the embodiment of FIG. **43**C, the optical fibers **442** will be routed near the pivot point **430**. The optical fibers **442** are held in a loop greater than the minimum bend

radius of the optical fibers **442** in the retainers **444** located at the bottom of the rear door **426**. In the embodiment of FIG. **43**C, the 900 micron optical fiber **446** may also be routed through one or more routing clips **448** in the rear of the fiber optic housing **428**.

Embodiments disclosed below also include fiber management sections for fiber optic housings, and related components and methods. In one embodiment, a fiber management device is provided. The fiber management device comprises a base and at least one fiber management component attached to the base and configured to manage one or more optical fibers. At least one opening is disposed in the base and configured to route one or more optical fibers from the base. The fiber management component may be a routing guide configured to route the one or more optical fibers as a non-limiting example.

In this regard, FIG. **44** is a rear perspective view of a fiber optic housing **450** mounted in an equipment rack with a fiber management device **452** mounted in the fiber optic housing **450**. The fiber optic housing **450** has the fiber management device **452** located in a rear portion of the fiber optic housing **450** that can be removed from the fiber optic housing **450**. The fiber management device **452** can be used for fiber slack storage and fiber management in a fiber optic housing for the LAN and data center environment. The fiber management device **452** can store incoming buffer tube or fiber optic cable slack and can also manage 900 micron optical fiber separately from other fiber optic cables or optical fibers.

The fiber management device **452** has the ability to strain-relieve incoming fiber optic cable, store fiber optic cable slack on a base level of the fiber management device **452**, and store 900 micron optical fiber on a raised level using routing clips. The fiber management device **452** may also be removable, allowing a technician to install, route, and configure fiber optic cable and slack outside the fiber optic housing **450**. In particular, a technician can remove the fiber management device **452** and place it on a work bench or table to freely install, route, and configure the fiber optic cable, as well as provide strain-relief and route the optical fiber per standard practices. After routing, the technician can easily install the fiber management device **452** into the fiber optic housing **450** without the use of tools.

Looking at FIGS. **44** and **45**, the fiber optic housing **450** is installed in a typical equipment rack **454** with the rear door **456** down. The fiber management device **452** can be mounted inside a rear door **456** on a bottom panel **457** of the fiber optic housing **450**. In this embodiment, the fiber management device **452** includes a base **460** configured to support at least one fiber management component. The base **460** includes at least one attachment device in the form of a mounting clip or tab **466** disposed in the base **460** and configured to be received by at least one receiver **467** disposed in the fiber optic housing **450** to secure the base **460** in the fiber optic housing **450**. The tabs **466** could be provided on each side or ends of the base **460**, if desired. The base **460** is configured so that the tab **466** can be removed from the receiver **467** to remove the base **460** from the fiber optic housing **450**. Alternatively, other fasteners could be used to secure the base **460** inside the fiber optic housing **450**. For example, the fastener could be a thumb screw. One or more recesses **473** can also be disposed in the base **460** to provide for the base **460** to not interfere with other components disposed in the fiber optic housing

FIG. **45** is a rear perspective view of the fiber optic housing **450** mounted in the equipment rack with the fiber management device **452** of FIG. **44** removed from the fiber optic housing **450**.

FIG. **46**A is a front perspective view of the fiber management device **452** of FIG. **45**. The fiber management device **452** has a plurality of routing clips **458** disposed on a base **460** of the fiber management device **452**. The fiber management device **452** may be a rectangular shape in one embodiment. In one embodiment, the fiber management device **452** also comprises slack storage components in the form of retainers **459** around a perimeter **461** of the fiber management device **452**. The retainers **459** are configured to store and/or retain slack storage of optical fibers. The retainers **459** may comprise a first member **481** extending upward from the base **460** and then angled inward to provide a second member **483** to retain the slack optical fiber inside the fiber management device **452**. The plurality of routing clips **458** each has a pedestal **462** and a top portion **464** that allows the routing clips **458** to be raised to a level above the base **460** of the fiber management device **452**. Pedestals **462** are disposed in the base **460** to support fiber management components above the base **460**, in this example, the routing clips **458**. The pedestals **462** may allow the routing clips **458** to be rotated about the base **460** if desired, as illustrated in FIGS. **46**A and **46**B. The fiber management device **452** may also have a plurality of tabs **466** for fastening the fiber management device **452** to the bottom panel **457** of the fiber optic housing **450**. The base **460** may also have one or more thumb screws **468** for fastening the fiber management device **452** to the bottom panel **457** of the fiber optic housing **450**.

FIG. **46**B is a front perspective view of the fiber management device **452** of FIG. **46**A illustrating an exemplary fiber optic cable routing with a buffer tube and 900 micron optical fiber. A buffer tube **470** may be routed along the base **460** of the fiber management device **452**, while a 900 micron optical fiber **472** may be routed through one or more of the top portions **464** of the routing clips **458** such that the 900 micron optical fiber **472** is routed and stored on a raised level from the base level of the buffer tube **470**. In this manner, slack storage, routing, and management is provided for both the buffer tube **470** and the 900 micron optical fiber **472** at the same time using a single device. In one embodiment, the fiber management device **452** may also comprise lances **474** near one or more corners **476** of the fiber management device **452** to provide strain relief for the incoming buffer tube **470**.

FIG. **46**C is a top front perspective view of the fiber management device **452** of FIG. **45** with exemplary optical fiber splice trays. The fiber management device **452** in this embodiment is similar to the embodiment of FIG. **46**B, except the routing clips **458** have been removed and a optical fiber splice tray **478** has been provided on the base **460** of the fiber management device **452**. FIG. **46**D is a front perspective view of an alternate fiber management device **480**. In this example, the fiber management device **480** also includes a base **493** configured to support one or more fiber management components. The fiber management device **480** can be disposed on any surface of a fiber optic housing, including interior surfaces in the enclosure of a fiber optic housing and/or a door of a fiber optic housing. The fiber management device **480** has a plurality of routing clips **482** for routing and storing a buffer tube as fiber management components for routing optical fibers disposed therethrough. The routing clips **482** may be like routing clips **356** in FIG. **31** and contain the same features, as previously described. Also in this embodiment, the routing clips **482** may be disposed on a common pedestal **495** disposed in the base **493** to raise the routing clips **482** above the base **493** and to provide flexibility in attaching other types of fiber management components that may or may not be compatible to be directly attached to the base **493**.

The fiber management device **480** also has a fan-out holder **484** for routing and storing one or more 900 micron optical fibers. The fan-out holder **484** is configured to retain and support fan-out bodies for optical fibers as another example of fiber management. The fiber management device **480** may also have a plurality of lances **486** for providing strain relief. In one embodiment, the lances **486** are positioned on an edge **488** of the fiber management device **480**. The fiber management device **480** may also have a plurality of attachment devices in the form of a plurality of integrated mounting clips **490** that are configured to attach the fiber management device **480** to a fiber optic housing or door of a fiber optic housing, as examples of surfaces in which the fiber management device **480** can be attached.

The fiber management devices described herein may be made out of metal or plastic. Instead of a single fiber management device, two or more smaller fiber management devices could be used such that fiber management devices are provided in different portions of a fiber optic housing, as illustrated in FIG. **47**. FIG. **47** is a rear perspective view of the fiber optic housing illustrating optical fiber storage using two (2) fiber management devices similar to the fiber management devices **480** of FIG. **46**D. FIG. **47** illustrates optical fiber management and storage in the rear of the housing on both the top and bottom. The optical fiber management and storage at the top is provided by routing clips and the optical fiber management and storage on the bottom is provided using the fiber management devices **480**.

An attachment housing (also known as a caboose, or an expandable caboose) provides additional features and may be used to expand the depth of the fiber optic housing, as illustrated in FIGS. **48**-**50**B. In one embodiment, the attachment housing is designed to be attached to a seven-inch fiber optic housing for use in the LAN and data center environment which may be mountable in the 19-inch or 23-inch equipment racks or cabinets. The attachment housing removably attaches to the side of the fiber optic housing in the strain relief bracket location, without the need for any extra hardware. The attachment housing allows the user to add splicing, more slack storage, and even more strain relief capability. In this way, the attachment housing allows an equipment rack-mounted fiber optic housing to be upgraded in the equipment rack from a connector housing to a splice housing, slack storage housing, or to increase the strain relief capacity of the housing to store plug and play cable assemblies. The attachment housing increases the depth of the fiber optic housing without using any more equipment rack space.

The attachment housing may involve simple tool-less installation to the fiber optic housing using the attachment features provided on the fiber optic housing. The attachment housing may use the existing rear door of the fiber optic housing, and may save rack space by only increasing the depth of the fiber optic housing but not the height. Additionally, the attachment housing gives the user more flexibility due to the fact that the attachment housing can be added at any time, even after the fiber optic housing is in service.

In this regard, embodiments disclosed herein also include apparatuses and related components and methods for expanding the capacity of fiber optic housings. In one embodiment, a fiber optic apparatus comprising an attachment housing comprising a side, a top, and a bottom defining an attachment interior chamber configured to support at least a portion of fiber optic equipment is provided. The attachment housing is tool-lessly, and by other than external fasteners, configured to removably attach to a fiber optic housing comprising a housing interior chamber configured to support fiber optic equipment to couple the attachment interior chamber and the housing interior chamber and expand the capacity of the fiber optic housing.

In an embodiment, the attachment housing is removably attached to the fiber optic housing by means of snap attachments integral to at least one of the attachment housing and the fiber optic housing. In another embodiment, one or more optical components mount within the attachment housing. In another embodiment, the optical components may include, without limitation, one or more splitter trays, fiber optic jumper slack storage, and one or more strain relief devices.

In this regard, the term "capacity" is used to refer to any or all of the following non-limiting examples: additional fiber optic housings in a data distribution center; increased internal volume of a fiber optic housing; increased space in an equipment rack for adding additional fiber optic housings; increased space for making additional connections of fiber optic cables or optical fibers to fiber optic equipment; and increased space for supporting additional fiber optic equipment such as fiber optic modules, fiber optic panels, splitter trays, fiber optic jumper storage, and/or strain relief devices. As one non-limiting example, a data distribution center may have space for a certain number of equipment racks, each of which can hold a certain number of fiber optic housings, each of which can hold a certain number of optical components. By adding the attachment housing to the fiber optic housing, additional fiber optic components may be added to the data distribution center without adding additional equipment racks or fiber optic housings. This would be one non-limiting example of expanding "capacity."

In this regard, FIG. **48** is a front perspective view of the fiber optic housing illustrating an expandable attachment housing separated from the fiber optic housing. FIG. **48** illustrates a fiber optic housing **492**, an attachment housing **494**, and a rear door **496** separated from each other. The attachment housing **494** has a top **493**, a bottom **495**, and one or more sides **497** which define an attachment interior chamber **499** configured to support fiber optic equipment. The fiber optic housing **492** may be of any type, including but not limited to, any of the fiber optic housings disclosed herein. The fiber optic housing **492** has a housing interior chamber **501** (illustrated in FIGS. **51** and **52**) configured to support fiber optic equipment. In one embodiment, the housing interior chamber **501** may be similar to any one or more of the interior chamber **135** in FIG. **15**, the interior chamber **161** in FIGS. **16**, **17**A, and **17**B, or the interior chamber **221** in FIGS. **19**A, **19**B, and **20**B. The rear door **496** is removed from the fiber optic housing **492** and the attachment housing **494** is attached to the rear of the fiber optic housing **492**. The rear door **496** is then reinstalled on the rear of the attachment housing **494**. In FIG. **48**, the attachment housing **494** is illustrated with splice trays **498**.

In one embodiment, the attachment housing **494** is attached to the fiber optic housing **492** by means of snap attachment features like those disclosed herein. In one embodiment, the attachment housing **494** has a plurality of receivers **500**, **502** located on sides **504**, **506** of the attachment housing **494**. In one embodiment, the receivers **500** may be square shaped and the receivers **502** may be arcuate-shaped, but in other embodiments, the receivers **500**, **502** may be any shape, including but not limited to circular, semi-circular, oval, or keyhole-shaped. The fiber optic housing **492** may have a plurality of snap attachments **508**, **510** located on a left side **512** of the fiber optic housing **492** (and on a right side as well, though not illustrated in FIG. **48**). The snap attachments **508**, **510** may be of any shape that corresponds to the shape of the receivers **500**, **502**. The receivers **500** are configured to receive the snap

attachments **508** and the receivers **502** are configured to receive the snap attachments **510** in order to removably attach the attachment housing **494** to the fiber optic housing **492**. In one embodiment, one or more of the snap attachments **510** may be in the form of release buttons configured to allow the attachment housing **494** to be easily and quickly removed, or detached, from the fiber optic housing **492**.

FIG. **49** is a front perspective view of the fiber optic housing **492** illustrating the expandable attachment housing **494** assembled to the fiber optic housing **492**. FIG. **49** illustrates the attachment housing **494** after it has been attached to the fiber optic housing **492**. The attachment housing **494** is removably attached to the fiber optic housing **492** using the snap attachments **508**, **510** on the sides of the fiber optic housing **492**. Once the attachment housing **494** is removably attached to the fiber optic housing **492**, additional capacity for adding fiber optic equipment is provided. In this manner, the fiber optic housing **492** is configured to support at least a portion of fiber optic equipment, and the attachment housing **494** is also configured to support at least a portion of fiber optic equipment.

FIGS. **50**A and **50**B show various versions of an attachment housing that can be used as the attachment housing **494** of FIGS. **48** and **49**. FIG. **50**A is a rear, perspective view of the expandable attachment housing **494** with jumper slack storage **514**. FIG. **50**B is a rear, perspective view of the expandable attachment housing **494** with internal strain relief brackets **516**.

The attachment housings disclosed herein may be removably attached to any size housing. Additionally, the attachment housings may provide for other functions, including, but not limited to, cooling fans and panels to provide additional connection capacity.

FIG. **51** is a rear view of an exemplary fiber optic housing illustrating how a rear door can be easily attached or removed. In one embodiment, a rear door needs to be removed in order to attach an attachment housing to a fiber optic housing, as seen in FIG. **48**. FIG. **51** illustrates a fiber optic housing **518** having a top **520**, a left side **522**, a right side **524**, and a bottom **526**. The top **520**, the left side **522**, the right side **524**, and the bottom **526** together define the housing interior chamber **501** configured to support at least a portion of fiber optic equipment. The bottom **526** has an edge **528** with corners **530**A, **530**B. Male hinge portions **532**A, **532**B are located at or near the corners **530**A, **530**B, respectively. Rods **534**A, **534**B extend from the male hinge portions **532**A, **532**B. A rear door **536** has a pair of female hinge portions **538**A, **538**B with channels **540**A, **540**B configured to receive the rods **534**A, **534**B. A tab **542** is provided on the edge **528** of the bottom **526** of the fiber optic housing **518** near the male hinge portions **532**A, **532**B.

FIG. **52** is a close-up view of how the rear door **536** of FIG. **51** can be easily attached to or removed from the fiber optic housing **518**.

Referring to FIGS. **51** and **52**, the tab **542** on the edge **528** of the bottom **526** of the fiber optic housing **518** may be raised up to allow the channel **540**B of the female hinge portion **538**B to be positioned under the tab **542** so that the channel **540**B can be slid onto the rod **534**B to attach the rear door **536** to the fiber optic housing **518**. If the rear door **536** is attached and it is desired to remove the rear door **536**, the tab **542** may be raised in order to allow the rear door **536** to be slid such that the channel **540**B is disengaged with the rod **534**B, thereby allowing the rear door **536** to be removed.

Once the door is removed, an attachment housing may be attached to the fiber optic housing **518**. The attachment housing may also have the tab **542** and the other features illustrated in FIGS. **51** and **52** so that the door is easily attached and removed, or detached, from the attachment housing as well. The features illustrated in FIGS. **51** and **52** also allow a door to be interchangeable for the front and rear of the fiber optic housing. The doors can be removed from the fiber optic housing and attachable to either the front or rear of the fiber optic housing.

As discussed above, the fiber optic housings disclosed herein can provide one or more features and options for fiber optic housings. Some non-limiting and non-exhaustive features disclosed herein include quick snap to rack capability for the fiber optic housing, snap-on mounting brackets, snap-on strain relief brackets, quick fit assembly housing, with no hardware or tools needed, removable top for fiber optic housings, removable front section for low profile rack installation, removable front jumper management device with pass-through grommets, integrated rails to house large splice modules, clips to hold fiber optic panels or smaller fiber optic modules, optical fiber slack storage and management on rear door, rubber entry grommets on all sides, molded in flexible edge protection for the fiber jumpers, and expandable housing using additional caboose housing.

As used in this disclosure, the terms "fiber optic module" and "fiber optic cassette" are used interchangeably to refer to either a fiber optic module or a fiber optic cassette, including but not limited to a splice cassette.

Many modifications and other embodiments of the invention set forth herein will come to mind to one skilled in the art to which the invention pertains having the benefit of the teachings presented in the foregoing descriptions and the associated drawings.

Further, as used herein, it is intended that terms "fiber optic cables" and/or "optical fibers" include all types of single mode and multi-mode light waveguides, including one or more optical fibers that may be bare, upcoated, colored, buffered, tight-buffered, loose-tube, ribbonized and/or have other organizing or protective structure in a cable such as one or more tubes, strength members, jackets or the like. Likewise, other types of suitable optical fibers include bend-insensitive optical fibers, or any other expedient of a medium for transmitting light signals. An example of a bend-insensitive, or bend resistant, optical fiber is ClearCurve® Multimode fiber commercially available from Corning Incorporated. Suitable fibers of this type are disclosed, for example, in U.S. Patent Application Publication Nos. 2008/0166094 and 2009/0169163.

Therefore, it is to be understood that the embodiments are not to be limited to the specific embodiments disclosed and that modifications and other embodiments are intended to be included within the scope of the appended claims. It is intended that the embodiments cover the modifications and variations of this invention provided they come within the scope of the appended claims and their equivalents. Although specific terms are employed herein, they are used in a generic and descriptive sense only and not for purposes of limitation.

What is claimed is:

1. A fiber management device, comprising:

a base;

at least one fiber management component attached to the base and configured to manage one or more optical fibers;

at least one first opening disposed in the at least one fiber management component and configured to route one or more optical fibers through the first opening in a first direction; and

at least one second opening disposed in the base and configured to route one or more optical fibers through the

second opening in a second direction perpendicular or substantially perpendicular to the first direction,

wherein the at least one first opening is aligned over the at least one second opening; and

wherein the base of the fiber management device is configured to be removably mounted in an opening in at least one of a front side and a rear side of a fiber optic housing.

2. The fiber management device of claim **1**, further comprising at least one grommet disposed in the at least one second opening.

3. The fiber management device of claim **2**, wherein the at least one grommet is removable from the at least one second opening to expose the at least one second opening to allow the one or more optical fibers to be routed through the at least one second opening.

4. The fiber management device of claim **2**, wherein the at least one grommet is made from a material comprised of a polymer.

5. The fiber management device of claim **1**, wherein the at least one fiber management component is comprised of at least one routing guide configured to route one or more optical fibers.

6. The fiber management device of claim **5**, wherein the at least one routing guide is comprised of a first routing guide disposed on a first end of the base and a second routing guide disposed on a second end of the base.

7. The fiber management device of claim **5**, wherein the at least one routing guide is comprised of at least one routing clip.

8. The fiber management device of claim **5**, wherein the at least one routing guide is comprised of a first arcuate member having a first end attached to the base and a second end adjacent a second end of a second member having a first end attached to the base.

9. The fiber management device of claim **8**, wherein the first arcuate member is flexible.

10. The fiber management device of claim **8**, wherein the second end of the first arcuate member abuts the second end of the second member when a compression force is not applied to the first arcuate member.

11. The fiber management device of claim **10**, wherein the second end of the first arcuate member is configured to separate from the second end of the second member when a compression force is applied to the first arcuate member.

12. The fiber management device of claim **1**, further comprising at least one third opening disposed in the base and configured to receive a fastener to attach the base to a mounting surface.

13. A fiber optic housing, comprising:

an enclosure defining at least one interior chamber configured to support fiber optic equipment; and

a fiber management device removably attached to an opening of at least one of a front side and a rear side of the enclosure and configured to be disposed in an interior chamber inside the enclosure, the fiber management device comprising:

a base;

at least one fiber management component attached to the base and configured to manage one or more optical fibers connected to the fiber optic equipment;

at least one first opening disposed in the at least one fiber management component and configured to route one or more optical fibers through the at least one first opening in a first direction;

at least one second opening disposed in the base and configured to route the one or more optical fibers from the enclosure through the at least one second opening in a second direction perpendicular or substantially perpendicular to the first direction; and

wherein the at least one first opening is aligned over the at least one second opening.

14. The fiber optic housing of claim **13**, wherein the fiber management device is further configured to be disposed outside the interior chamber of the enclosure.

15. The fiber optic housing of claim **13**, wherein the fiber management device is attached to a base of the enclosure.

16. The fiber optic housing of claim **13**, further comprising a removable front section attached to the enclosure, wherein the fiber management device is attached to the removable front section.

17. The fiber optic housing of claim **13**, wherein the base is attached in a plane in the enclosure parallel to a front plane of fiber optic equipment disposed in the enclosure.

18. The fiber optic housing of claim **13**, wherein the base is attached in a plane in the enclosure generally at a right angle to a front plane of fiber optic equipment disposed in the enclosure.

19. The fiber optic housing of claim **13**, further comprising at least one grommet disposed in the at least one opening disposed in the base.

20. The fiber optic housing of claim **19**, wherein the at least one grommet is removable from the at least one opening to expose the at least one opening to allow the one or more optical fibers to be routed through the at least one opening disposed in the base.

21. The fiber optic housing of claim **13**, wherein the at least one fiber management component is comprised of at least one routing guide configured to route one or more optical fibers.

22. A method of managing optical fiber in a fiber optic housing, comprising:

routing one or more optical fibers from fiber optic equipment disposed in an enclosure to at least one fiber management component disposed in a fiber management device removably attached to at least one of a front side and a rear side of the enclosure,

the fiber management device comprising:

a base;

the at least one fiber management component attached to the base and configured to manage one or more optical fibers connected to the fiber optic equipment;

at least one first opening disposed in the base and configured to route the one or more optical fibers from the enclosure in a first direction; and

at least one second opening disposed in the at least one fiber management component and configured to route the one or more optical fibers through the at least one second opening in a second direction perpendicular or substantially perpendicular to the first direction; and

wherein the at least one first opening is aligned over the at least one second opening; and

routing the one or more optical fibers through the at least one first opening disposed in the base.

23. The method of claim **22**, further comprising routing the one or more optical fibers through the at least one first opening disposed in the base of the fiber management device.

24. The method of claim **22**, further comprising removing the fiber management device from the enclosure.

25. The method of claim **22**, further comprising:

derouting the one or more optical fibers through the at least one first opening; and

inserting at least one grommet in the at least one opening disposed in the base.

26. The method of claim **22**, further comprising mounting the fiber management device in the enclosure.

27. The method of claim **26**, wherein mounting the fiber management device further comprises disposing at least one fastener through at least one first opening disposed in the base into at least one receiver disposed in the enclosure.

28. The method of claim **22**, wherein the at least one fiber management device is comprised of at least one routing guide each defining one of the at least one second opening, wherein routing the one or more optical fibers comprises:

separating a first arcuate member of the at least one routing guide from a second member of the at least one routing guide;

disposing the one or more optical fibers through an opening formed by the separating of the first arcuate member from the second member; and

releasing the separation of the first arcuate member from the second member to close the at least one routing guide while the one or more optical fibers are disposed inside the at least one routing guide, thereby disposing the at least one optical fiber in the at least one second opening.

* * * * *