US007346253B2

(12) **United States Patent**
Bloodworth et al.

(10) **Patent No.: US 7,346,253 B2**
(45) **Date of Patent: Mar. 18, 2008**

(54) **FIBER OPTIC DROP CABLE SLACK STORAGE RECEPTACLE**

(75) Inventors: **Stephen G. Bloodworth**, Ft. Worth, TX (US); **Brad N. Grunwald**, Euless, TX (US); **John A. Keenum**, Keller, TX (US); **John J. Napiorkowski**, Irving, TX (US); **Jason B. Reagan**, The Colony, TX (US); **Harley J. Staber**, Coppell, TX (US); **Rodger A. Tenholder**, Saginaw, TX (US); **Chanh C. Vo**, Arlington, TX (US); **Terry L. Cooke**, Hickory, NC (US); **Tory A. Klavuhn**, Newton, NC (US); **James P. Luther**, Hickory, NC (US)

(73) Assignee: **Corning Cable Systems LLC**, Hickory, NC (US)

(*) Notice: Subject to any disclaimer, the term of this patent is extended or adjusted under 35 U.S.C. 154(b) by 156 days.

(21) Appl. No.: **10/746,411**

(22) Filed: **Dec. 24, 2003**

(65) **Prior Publication Data**

US 2005/0145522 A1 Jul. 7, 2005

(51) **Int. Cl.**
G02B 6/00 (2006.01)

(52) **U.S. Cl.** **385/135**; 385/134

(58) **Field of Classification Search** 385/134, 385/135

See application file for complete search history.

(56) **References Cited**

U.S. PATENT DOCUMENTS

4,428,645	A *	1/1984	Korbelak et al.	385/135
4,800,588	A	1/1989	Poster, Jr.	379/142
4,850,014	A	7/1989	Gillis et al.	379/399
4,890,318	A	12/1989	Crane et al.	379/399
5,071,220	A *	12/1991	Ruello et al.	385/135
5,420,958	A	5/1995	Henson et al.	385/135
5,668,911	A	9/1997	Debortoli	385/135
5,978,472	A	11/1999	Tuvy et al.	379/399
6,028,769	A	2/2000	Zurek	361/704
6,031,300	A	2/2000	Moran	307/119
6,061,492	A	5/2000	Strause et al.	385/135
6,249,633	B1	6/2001	Wittmeier, II et al.	385/135
D449,824	S	10/2001	Higa et al.	D13/184
6,383,034	B1	5/2002	Blake et al.	439/713
6,385,381	B1	5/2002	Janus et al.	385/135
6,560,394	B1	5/2003	Battey et al.	385/135
6,625,375	B1	9/2003	Mahony	385/135
6,661,961	B1	12/2003	Allen et al.	385/135

(Continued)

Primary Examiner—Jennifer Doan
(74) *Attorney, Agent, or Firm*—Keith A. Roberson

(57) **ABSTRACT**

A slack storage receptacle for storing an excess length of a pre-connectorized fiber optic drop cable extending between an optical connection terminal and a network interface device (NID) includes a housing and a storage means disposed within the housing for receiving the drop cable such that the drop cable slack is stored external to the NID. The slack storage receptacle may be secured to an exterior wall of a subscriber premises and the NID mounted thereon. Alternatively, the slack storage receptacle may be positioned around and formed to the NID. Alternatively, the slack storage receptacle may be buried in the ground adjacent the NID. The drop cable slack may be wound onto the storage means after deployment. Alternatively, the slack storage receptacle may be pre-assembled, shipped to the subscriber premises, and the drop cable unwound from the storage means with the drop cable slack remaining wound on the storage means.

33 Claims, 8 Drawing Sheets

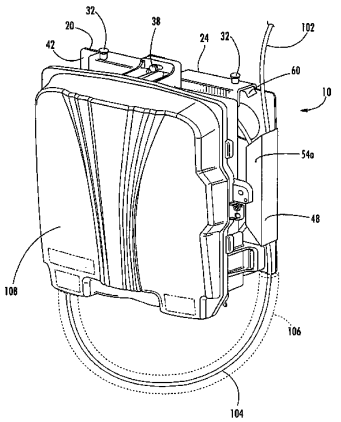

U.S. PATENT DOCUMENTS

6,721,484	B1	4/2004	Blankenship et al.	385/135
6,795,552	B1	9/2004	Stanush et al.	379/413.01
6,815,612	B2	11/2004	Bloodworth et al.	174/50
6,990,192	B1	1/2006	Denovich et al.	379/399.01
7,035,399	B2	4/2006	Gemme et al.	379/413.03
2003/0103750	A1*	6/2003	Laporte et al.	385/134
2005/0111800	A1*	5/2005	Cooke et al.	385/100
2006/0067522	A1	3/2006	Paulsen	379/413.02

* cited by examiner

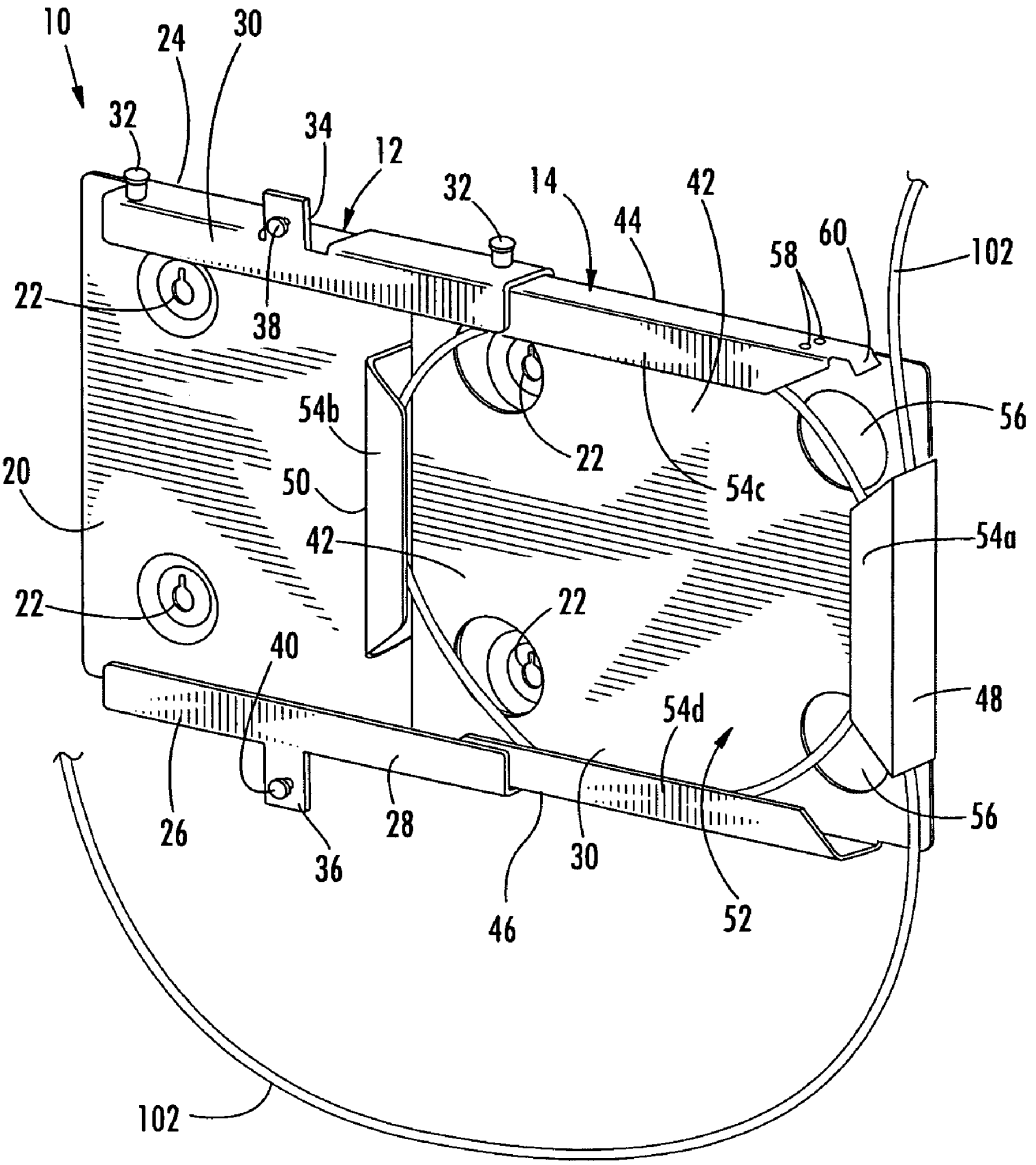
10
24
30
32
34
12
32
14
42
44
58
60
102
22
38
54b
22
56
20
50
54c
42
54a
22
22
40
48
54d
26
36
28
30
56
46
52
102

FIG. 1

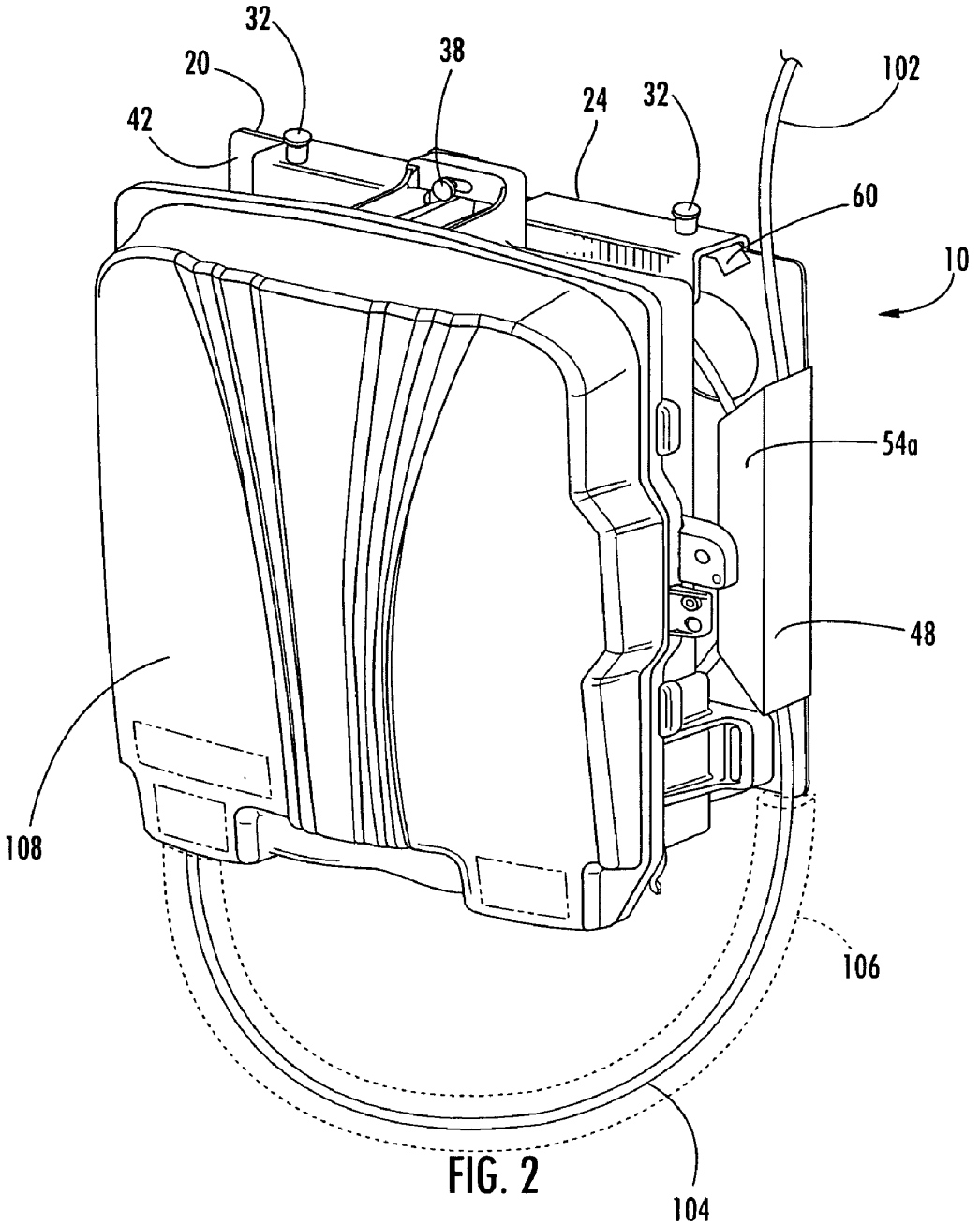

FIG. 2

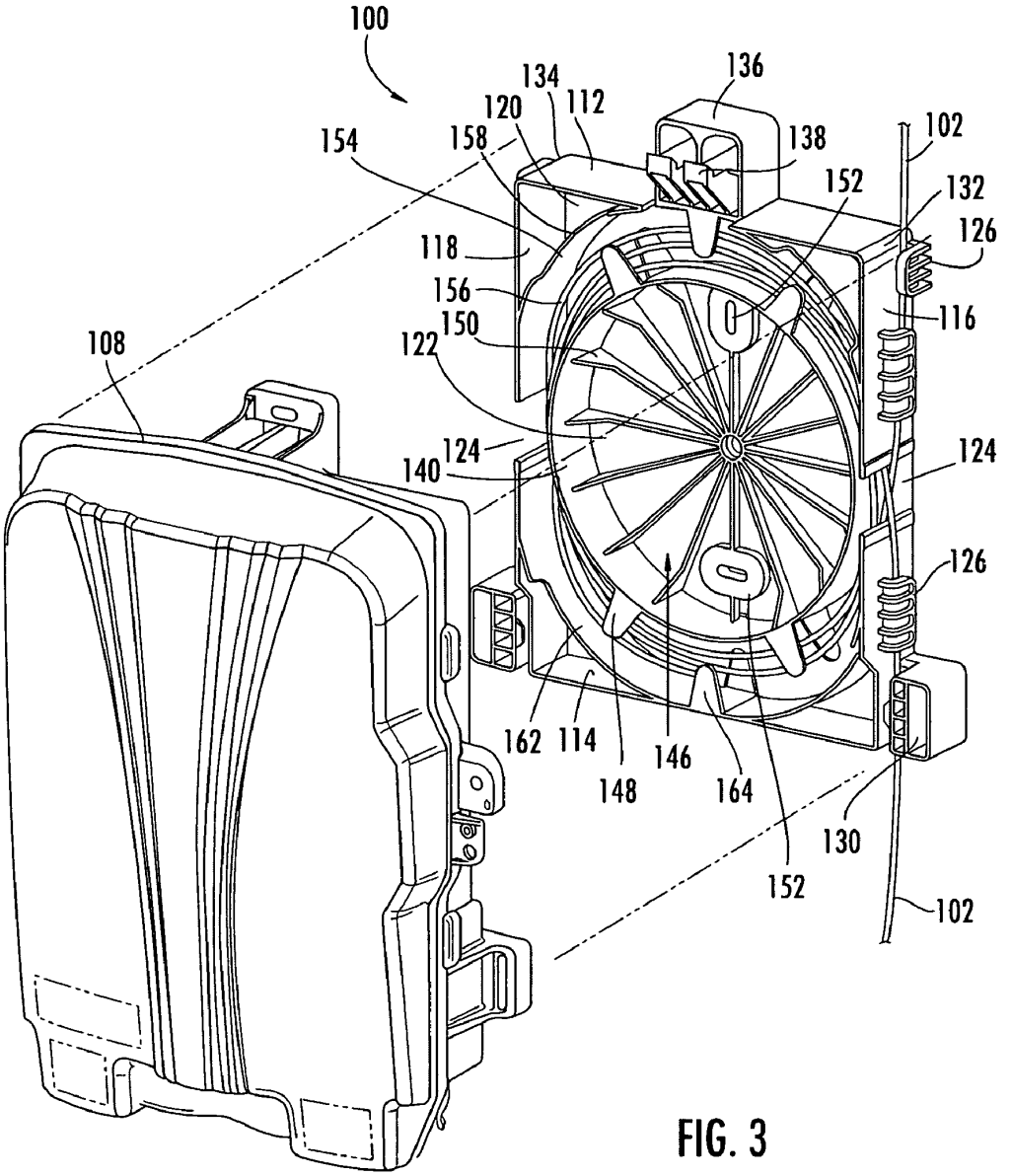
100
136
134
120
112
154
158
138
102
152
132
126
118
156
116
150
122
108
124
140
124
126
162
114
146
148
164
130
152
102

FIG. 3

FIG. 4

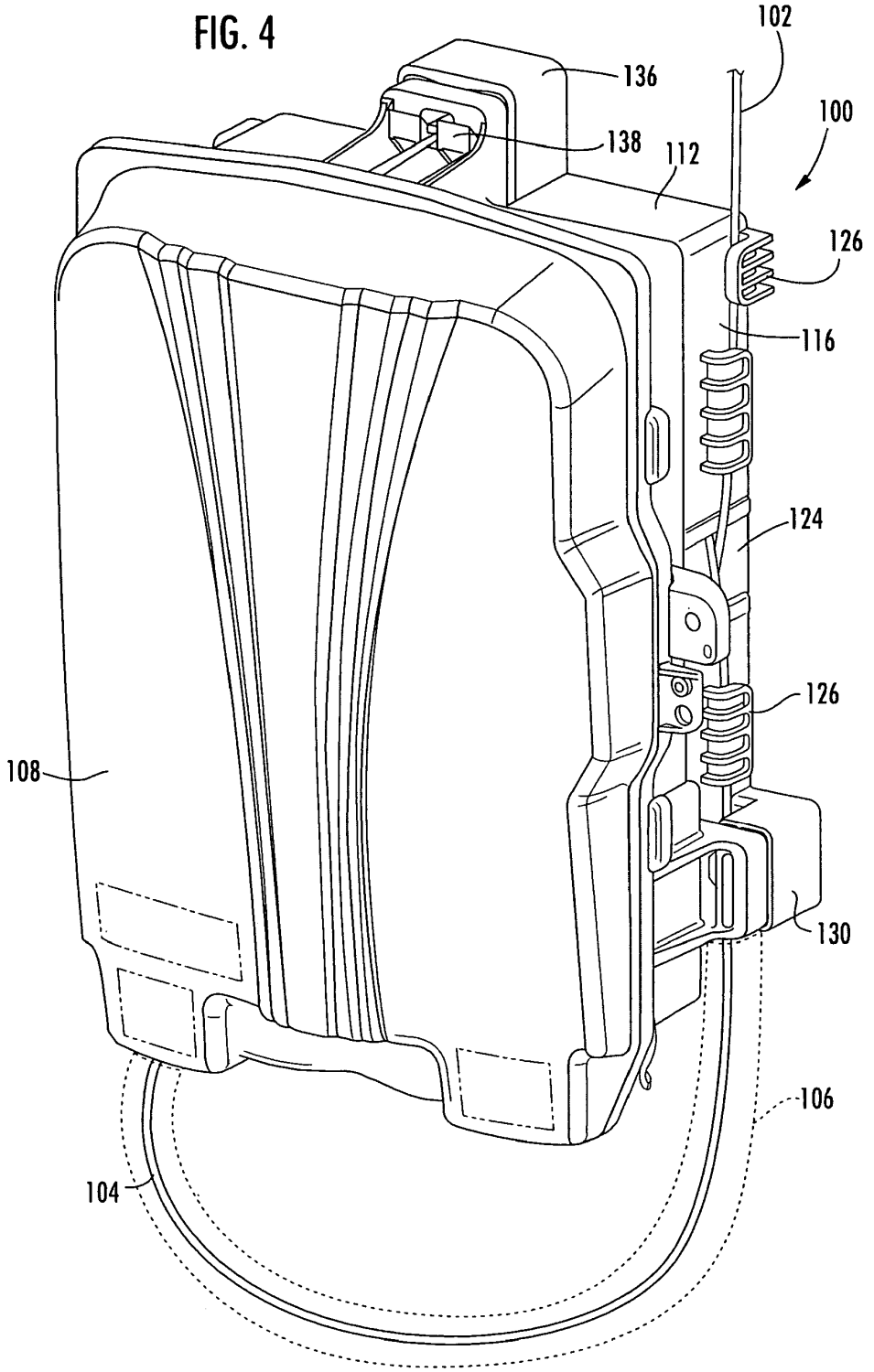

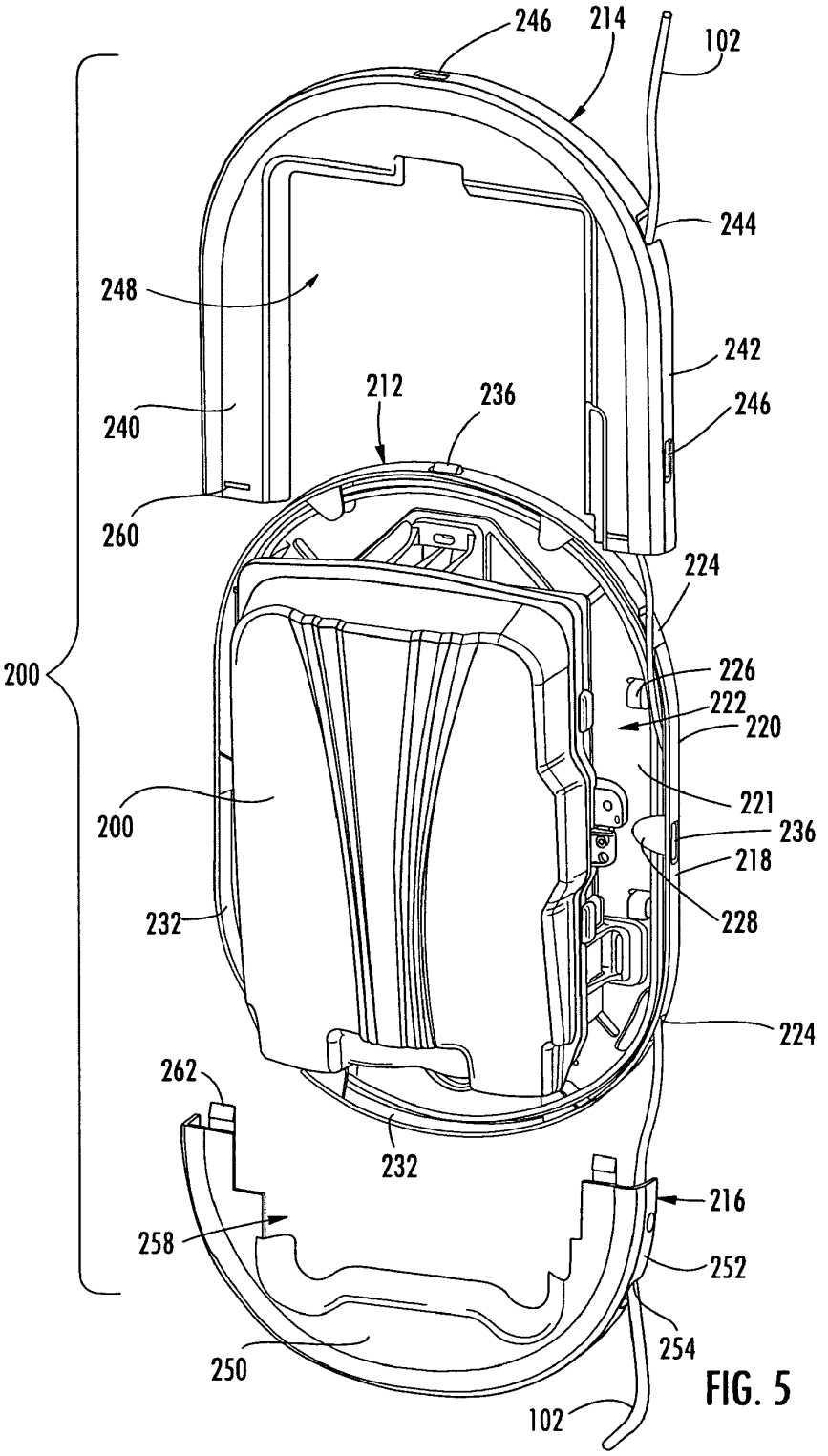
246
214
102
244
248
242
212
236
246
240
260
224
200
226
222
220
221
200
236
218
232
228
224
262
232
216
258
252
254
250
102

FIG. 5

FIG. 6

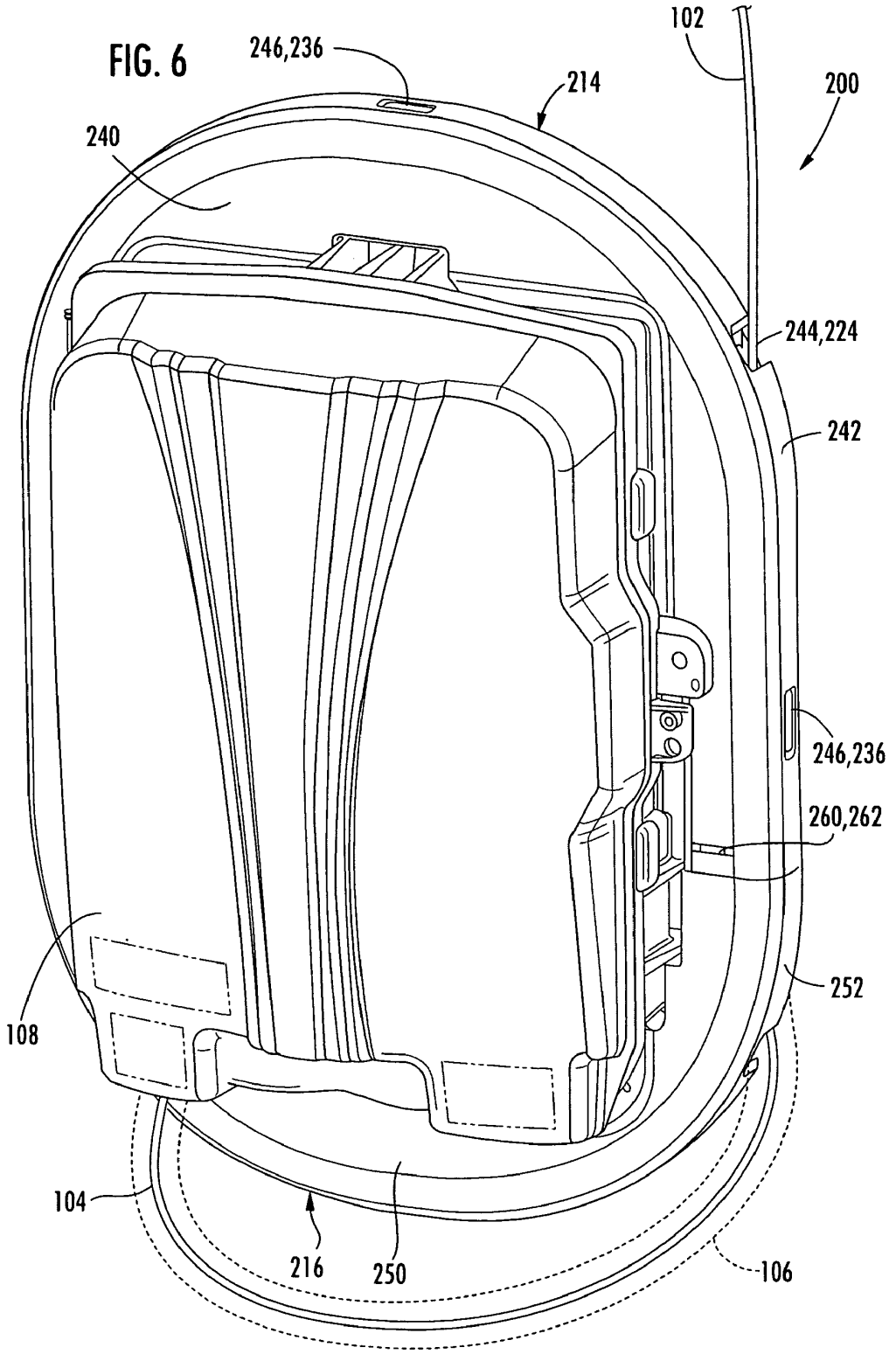
246,236
214
102
200
240
244,224
242
246,236
260,262
252
108
104
216
250
106

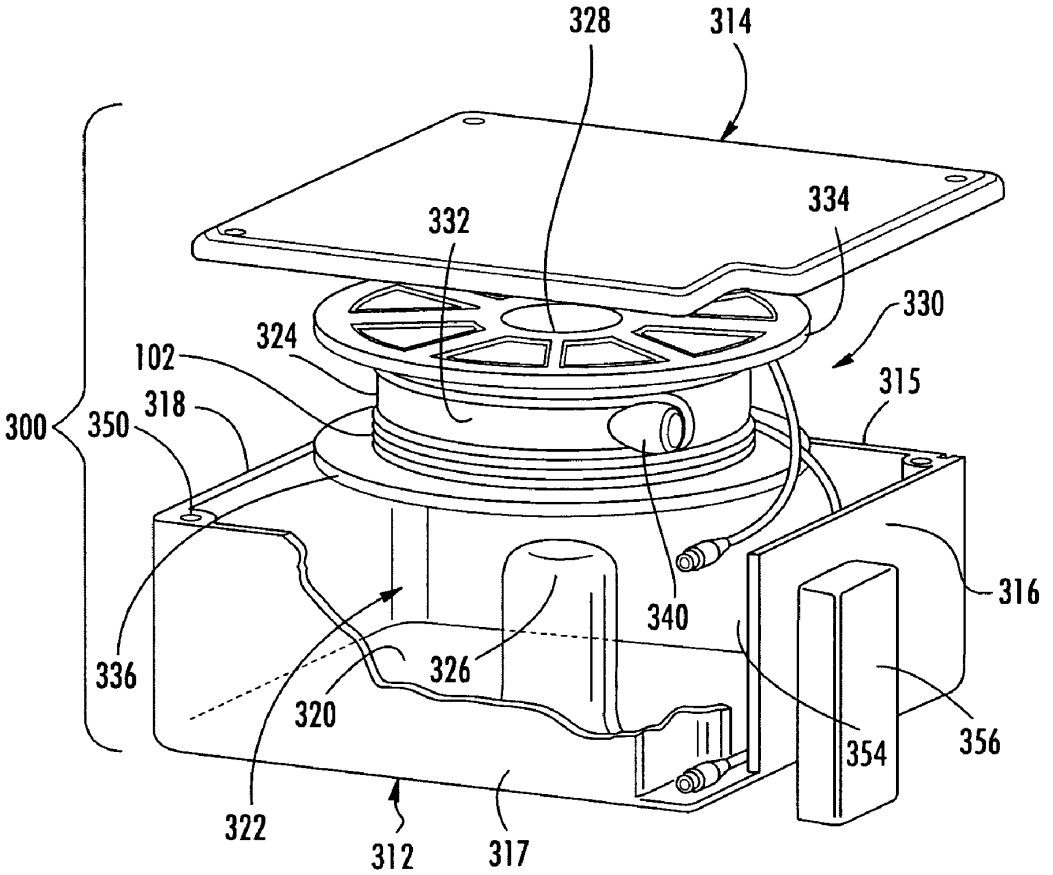
328
314
332
334
330
324
102
315
300
350
318
316
340
336
326
320
354
356
322
312
317

FIG. 7

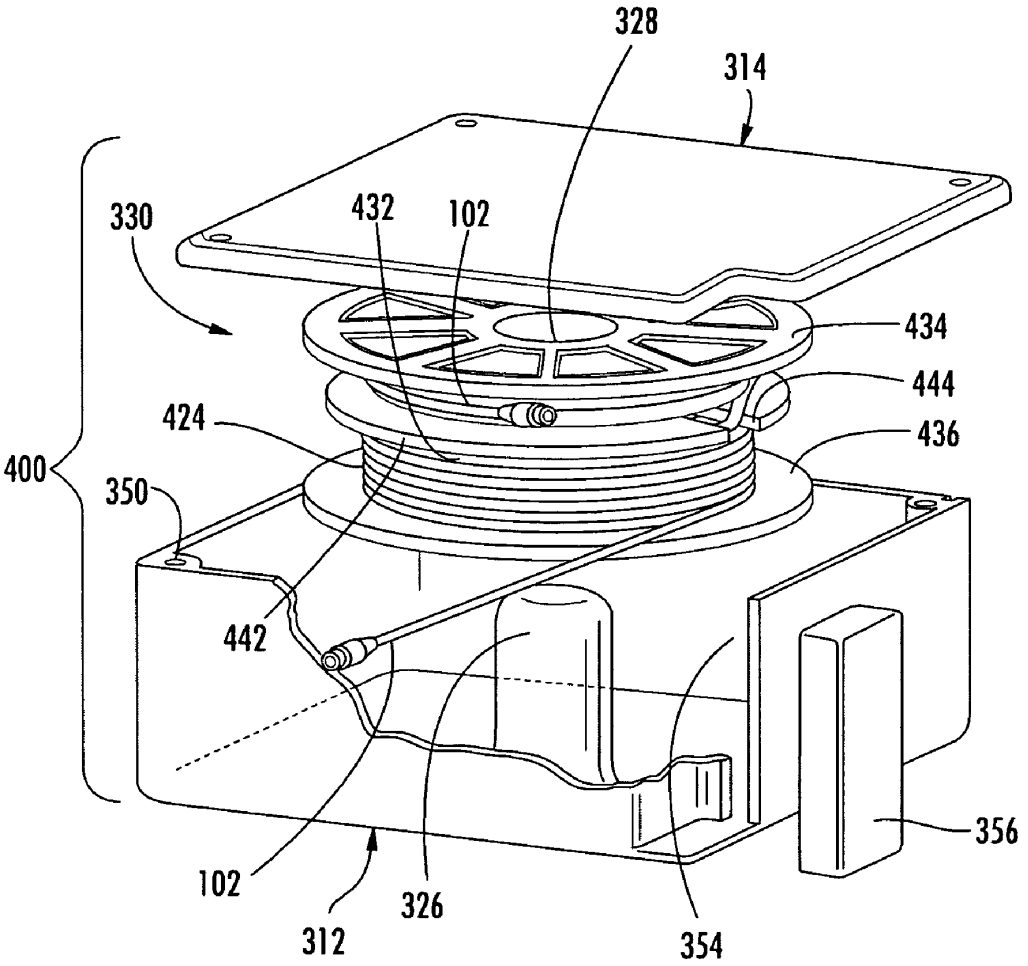
328
314
330
432
102
434
444
424
436
400
350
442
356
102
326
312
354

FIG. 8

FIBER OPTIC DROP CABLE SLACK STORAGE RECEPTACLE

BACKGROUND OF THE INVENTION

1. Field of the Invention

The present invention relates generally to a storage receptacle for a fiber optic drop cable, and more particularly, to a fiber optic drop cable slack storage receptacle for storing and protecting an excess length of a pre-connectorized fiber optic drop cable in an optical communications network.

2. Description of the Related Art

The telecommunications industry has recognized the many advantages of fiber optic cable, including a significantly higher bandwidth and greater performance and reliability than conventional copper wire systems. Despite the many advantages, extremely high installation costs have discouraged service providers from deploying continuous fiber optic networks extending from their central office facilities all the way to subscriber premises. As used herein, "fiber-to-the-premises" (FTTP) refers to the deployment of an optical fiber network that extends continuously to the subscriber premises. Along the primary distribution lines of a communications network, the volume of traffic and the number of customers often justify the high installation cost of optical fiber. However, thus far, the additional cost of deploying optical fiber to remote, individual subscriber premises has far outweighed the potential benefits to service providers.

Therefore, instead of implementing FTTP networks, service providers have developed various strategies to provide certain of the benefits of fiber optic networks, without actually incurring the costs associated with deploying optical fiber all the way to the home (or other subscriber premises). One such strategy is known as "fiber-to-the-curb" (FTTC), in which optical fiber extends from the service provider's central office to local terminals (also referred to as outside plant terminals, local convergence cabinets, etc.) that are situated in service areas having a high concentration of subscribers. Such FTTC systems provide certain of the benefits of an all fiber optic network, but still require the deployment of a continuous fiber optic network from the service provider's transceiving and/or switching equipment to the subscriber's transceiving equipment in order to realize the full benefit of the fiber optic network.

It is known that fiber optic drop cables may be efficiently connectorized in a controlled manufacturing environment, such as an optical cable assembly plant, thereby avoiding the higher material, labor and equipment costs required to connectorize drop cables in the field. By pre-connectorizing the fiber optic drop cable, the necessity of field splicing an optical fiber of the drop cable to, for example, an optical fiber of a distribution cable, is avoided. However, the pre-connectorized drop cable must be manufactured in either custom or preselected standard lengths, the former being impractical due to the higher manufacturing costs so that the latter is a preferred solution in most instances. A problem which then exists is where and how to store the excess length of drop cable that results when deploying, for example, a standard 108-foot drop cable when the length of the drop cable actually needed is only 175 feet. Service providers have long desired to deploy pre-connectorized drop cables in order to reduce field labor and installation costs, but thus far have not been presented with an effective manner in which to store the excess length of the drop cable (also referred to herein as drop cable slack).

Therefore, what is needed is an apparatus for storing the fiber optic drop cable slack that results when deploying a pre-connectorized drop cable to a subscriber premises. Further, what is needed is an apparatus that both stores drop cable slack and substantially conceals it from view, such as a slack storage receptacle that is mounted to a wall surface of a subscriber premises, is buried in the ground, or is mounted in close proximity to a connection terminal, such as an aerial closure or an above-ground telecommunications pedestal.

BRIEF SUMMARY OF THE INVENTION

To achieve the foregoing and other objects, and in accordance with the purposes of the invention as embodied and broadly described herein, the present invention provides various embodiments of a fiber optic drop cable slack storage receptacle for storing and protecting an excess length of a fiber optic drop cable deployed in an optical communications network. In particular, the present invention provides various embodiments of a fiber optic drop cable storage receptacle for storing and protecting the excess length of a pre-connectorized fiber optic drop cable deployed between a connection terminal and a subscriber network interface device (NID) in an optical communications network. The slack storage receptacle described herein substantially reduces the additional cost of manufacturing, shipping and deploying custom lengths of pre-connectorized fiber optic drop cables to a subscriber premises. Further, the slack storage receptacle described herein allows a field technician to install a pre-connectorized fiber optic drop cable at a subscriber premises and to store the drop cable slack, while providing protection to the drop cable from adverse environmental conditions.

To facilitate the deployment of optical fiber to the subscriber premises, the slack storage receptacle of the present invention is operable for storing the excess length of fiber optic drop cable that extends between a network connection terminal and the subscriber premises. In one exemplary embodiment, the present invention is a slack storage receptacle that facilitates the deployment and installation of optical fiber to a NID mounted on the exterior wall of the subscriber premises. The slack storage receptacle includes a housing and a drawer that is adapted to cooperate in sliding engagement with the housing. To facilitate long-term, trouble free service, the slack storage receptacle is configured so as to not interfere with the operational functions of the NID, and is further configured to store fiber optic drop cable slack while maintaining the minimum bend radius of the drop cable. The housing includes a substantially planar rear panel having at least one recessed mounting port for receiving a fastener to secure the housing to the exterior wall of the subscriber premises, a top wall and a bottom wall. The top and bottom walls each have a lip extending therefrom and projecting inwardly towards the opposite wall. Further, at least one of the top and bottom walls of the housing has a plurality of biased locking pins for securing the drawer in an opened configuration and a closed configuration relative to the housing. Preferably, the pins are laterally offset and located at opposing ends of the wall to which they are affixed. Extending from the top and bottom walls of the first housing are mounting brackets for mounting the NID or a cover plate onto the housing.

The drawer includes a substantially planar rear wall, a top wall, a bottom wall and opposed side walls, which together define an interior cavity for retaining the drop cable slack. Extending from each wall is a lip that projects inwardly

towards the interior cavity of the drawer. The rear wall of the drawer has at least one aperture disposed therein that is coincident with the at least one mounting port with the drawer in the closed configuration to permit a field technician to access the fastener within the mounting port. A respective one of the top wall and the bottom wall of the drawer has a corresponding plurality of openings therethrough, one of which is coincident with a corresponding pin of the housing in the opened configuration and the closed configuration. The respective top or bottom wall is further provided with guiding tabs at the opposed ends thereof for permitting the drawer to travel past the corresponding pin while being moved from the opened configuration to the closed configuration. When the drawer is slidably engaged with the housing, at least one, and preferably only one, of the pins of the housing engages the corresponding opening in the drawer to secure the receptacle in the closed configuration. When the drawer is in the opened configuration, a field technician can easily arrange one or more coils of the drop cable slack therein so that the outward bias of the drop cable coils presses the drop cable slack against the top wall, the bottom wall and the side walls of the drawer, thereby retaining the drop cable slack within the drawer of the slack storage receptacle, while maintaining a minimum bend radius of the fiber optic drop cable.

The slack storage receptacle may be secured to the exterior wall of a subscriber premises with or without the NID mounted thereon, or may be secured in the vicinity of a connection terminal of the optical network at a location remote from the NID. For example, but without limitation, the slack storage receptacle may be secured at an aerial location in the vicinity of an aerial closure, at an above-ground location in the vicinity of a telecommunications pedestal, or at a buried location in the vicinity of a below grade closure. Regardless, the drop cable slack is stored external to the NID in a concealed manner to discourage unauthorized access and to protect the drop cable slack from inadvertent damage or direct exposure to adverse environmental conditions.

In an alternative embodiment of the present invention, the slack storage receptacle consists of a generally rectangular housing including a rear panel, a top wall, a bottom wall and opposed side walls, which together generally form an open box-like structure defining an interior cavity for storing one or more coils of drop cable slack. At least one, and preferably both, side walls of the housing include at least one cable opening located medially between the opposed ends of the side wall. At least one routing guide is provided along the outer surface of the side wall for routing a fiber optic drop cable to and from the respective cable opening. At least one mounting feature for mounting the NID to the slack storage receptacle is provided on the housing, and preferably, a mounting feature is provided at each of the lower corners of the storage receptacle adjacent the side walls and the bottom wall. Located medially between the opposed ends of the top wall is a hinge assembly adapted to receive the NID such that the NID is hingedly affixed to the housing. Alternatively, a cover plate may be mounted onto the housing in place of the NID. Affixed to the rear panel and projecting outwardly is an inner hub having a plurality of radially outwardly extending retaining flanges. Preferably, the interior area of the inner hub is provided with a plurality of stiffening ribs to strengthen and prevent distortion of the rear panel and the inner hub during shipping, deployment and/or service. Disposed within the interior area of the inner hub is at least one, and preferably, a plurality of mounting ports for securing the housing to, for example, an exterior wall of a subscriber premises. The rear panel is also provided with an outer hub spaced laterally from and substantially surrounding the inner hub to form a cable channel in which the drop cable slack is retained. The outer hub may be provided with a plurality of radially inwardly extending retaining flanges to permit a field technician to easily position coils of the drop cable slack within the cable channel. The slack storage receptacle may be secured to the exterior wall of a subscriber premises with or without the NID mounted thereon, or may be secured in the vicinity of a connection terminal of the optical network at a location remote from the NID. For example, but without limitation, the slack storage receptacle may be secured at an aerial location in the vicinity of an aerial closure, at an above-ground location in the vicinity of a telecommunications pedestal, or at a buried location in the vicinity of a below grade closure. Regardless, the drop cable slack is stored external to the NID in a concealed manner to discourage unauthorized access, and to protect the drop cable slack from inadvertent damage or direct exposure to adverse environmental conditions.

In still another alternative embodiment of the present invention, the slack storage receptacle consists of a housing having a generally oval-shaped configuration, a top cover and a bottom cover. The housing consists of an oval-shaped rear panel and a side wall defining an annular cable channel for storing one or more coils of drop cable slack. The cable channel is configured so as to have a radius of curvature that exceeds the minimum bend radius of the drop cable and extends beyond the outer periphery of a conventional sized NID. The rear panel comprises a generally planar back wall and the side wall extends outwardly from the back wall continuously along the outer perimeter of the back wall. The back wall is provided with a first mounting means (not shown) adapted to secure the housing to, for example, an exterior wall of a subscriber premises, and a second mounting means (not shown) adapted to secure the NID to the housing. Preferably, the side wall is provided with a plurality of circumferentially spaced retaining flanges that are affixed to the interior surface of the side wall for retaining the coiled drop cable slack within the cable channel. Together, the side wall and plurality of retaining flanges form the cable channel for storing the drop cable slack within the housing. At least one, and preferably, more than one cable transition opening is provided through the side wall at a predetermined location for transitioning the drop cable slack into or out of the housing. A plurality of projecting studs are located peripherally along the exterior surface of the side wall for engaging retaining mechanisms provided on the top cover and the bottom cover to securely retain the top and bottom covers on the housing, and thereby form an enclosed assembly around the NID. The top cover and the bottom cover each include a partial front wall that overlies the rear panel of the housing and an outer wall that is sized so as to overlap and engage the side wall of the housing. The outer wall has at least one, and preferably, more than one opening or recess therethrough that defines a cable transition duct for transitioning the drop cable into the top cover and out of the bottom cover. Each cable transition duct is coincident with a corresponding cable transition opening provided on the side wall of the housing when the top cover and the bottom cover are assembled on the housing to allow the drop cable to enter and exit the slack storage receptacle. The top cover and the bottom cover are each provided with at least one retaining mechanism, such as an elongate slot and a latch, respectively, to securely retain the top cover and the bottom cover together on the housing in the fully assembled configuration previously described. A cutaway portion centrally disposed

in each of the front walls of the top cover and the bottom cover is shaped to conform to the shape of the outer contour of the NID. Thus, the top cover and the bottom cover are adapted to cooperate with each other to conform to the contour of the outer periphery of the NID when the latch provided on the bottom cover engages the slot provided on the top cover. The slack storage receptacle may be secured to the exterior wall of a subscriber premises with or without the NID mounted thereon, or may be secured in the vicinity of a connection terminal of the optical network at a location remote from the NID. For example, but without limitation, the slack storage receptacle may be secured at an aerial location in the vicinity of an aerial closure, at an above-ground location in the vicinity of a telecommunications pedestal, or at a buried location in the vicinity of a below grade closure. Regardless, the drop cable slack is stored external to the NID in a concealed manner to discourage unauthorized access, and to protect the drop cable slack from inadvertent damage or direct exposure to adverse environmental conditions.

In still another alternative embodiment, the slack storage receptacle consists of a generally box-shaped housing, a cover and a storage means disposed within the housing for storing one or more coils of drop cable slack. The housing includes a rear panel, a top wall, a bottom wall and two opposed side walls, which together define an interior cavity. The storage means is approximately centrally disposed within the interior cavity defined by the housing and preferably comprises a hub extending upwardly from the interior surface of the rear panel and a reel rotatably mounted on the hub for storing the drop cable slack. The reel includes an inner wall adjacent the hub and an outer wall spaced outward radially from the inner wall that defines a generally cylindrical surface for receiving the drop cable slack. The reel further includes at least two spaced apart outer flanges for retaining the drop cable slack on the outer wall. The reel may also include a bend radius guide disposed on the outer wall for reversing the direction in which the drop cable slack is wound onto or paid off the reel. Alternatively, the reel may include a radially extending medial flange disposed on the outer wall between the outer flanges to thereby define a first storage location for storing a first length of the drop cable slack and a second storage location for storing a second length of the drop cable slack. Preferably, the medial flange has a radial slot formed therein for permitting the drop cable slack to transition between the first storage location and the second storage location. The entire length of the fiber optic drop cable may be stored on the reel such that the slack storage receptacle is advantageously useable as a shipping container and a deployment device. The fiber optic drop cable is wound onto the reel, the reel is positioned on the hub and disposed within the housing, and the cover is secured to the housing to seal the slack storage receptacle against adverse environmental conditions encountered during shipping. The fiber optic drop cable is then deployed into the optical communications network between, for example, a network connection terminal and a NID located at a subscriber premises with the drop cable slack stored within the slack storage receptacle. The slack storage receptacle may be secured to the exterior wall of a subscriber premises with or without the NID mounted thereon, or may be secured in the vicinity of a connection terminal of the optical network at a location remote from the NID. For example, but without limitation, the slack storage receptacle may be secured at an aerial location in the vicinity of an aerial closure or at an above-ground location in the vicinity of a telecommunications pedestal, or may be secured at a buried location in the vicinity of a below grade closure. Preferably, however, the slack storage receptacle of this embodiment is buried at a convenient location between the connection terminal and the NID, and most preferably, is buried immediately adjacent the subscriber premises. Regardless, the drop cable slack is stored external to the NID in a concealed manner to discourage unauthorized access, and to protect the drop cable slack from inadvertent damage or direct exposure to adverse environmental conditions.

BRIEF DESCRIPTION OF THE DRAWINGS

These and other features, aspects and advantages of the present invention are better understood when the following detailed description of the invention is read with reference to the accompanying drawings, in which:

FIG. **1** is a perspective view of a fiber optic drop cable slack storage receptacle for storing an excess length of a pre-connectorized fiber optic drop cable in an optical communications network in accordance with an exemplary embodiment of the present invention;

FIG. **2** is a perspective view of the slack storage receptacle of FIG. **1** shown in the closed configuration and with a conventional NID mounted thereon;

FIG. **3** is a perspective view of a fiber optic drop cable slack storage receptacle for storing an excess length of a pre-connectorized fiber optic drop cable in an optical communications network in accordance with an alternative embodiment of the present invention;

FIG. **4** is a perspective view of the slack storage receptacle of FIG. **3** shown in the assembled configuration and with a conventional NID mounted thereon;

FIG. **5** is a perspective view of a fiber optic drop cable slack storage receptacle for storing an excess length of a pre-connectorized fiber optic drop cable in an optical communications network in accordance with yet another alternative embodiment of the present invention;

FIG. **6** is a perspective view of the slack storage receptacle of FIG. **5** shown in the assembled configuration and with a conventional NID mounted thereon;

FIG. **7** is a perspective view of a fiber optic drop cable slack storage receptacle for storing an excess length of a pre-connectorized fiber optic drop cable in an optical communications network in accordance with yet another alternative embodiment of the present invention; and

FIG. **8** is a perspective view of a fiber optic drop cable slack storage receptacle for storing an excess length of a pre-connectorized fiber optic drop cable in an optical communications network in accordance with yet another alternative embodiment of the present invention.

DETAILED DESCRIPTION OF THE INVENTION

The present invention will now be described more fully hereinafter with reference to the accompanying drawings in which exemplary embodiments of the invention are shown. However, this invention may be embodied in many different forms and should not be construed as limited to the embodiments set forth herein. These exemplary embodiments are provided so that this disclosure will be both thorough and complete, and will fully convey the scope of the invention to those skilled in the art. Like reference numbers refer to like elements throughout the various drawings.

The present invention provides a fiber optic drop cable slack storage receptacle for storing and protecting an excess length of a pre-connectorized fiber optic drop cable in an

optical communications network. As is well known and understood in the art, a connectorized fiber optic drop cable comprises a hollow cable sheath or jacket housing at least one flexible transport tube containing one or more optical fibers. In one example, a fiber optic drop cable may be used to optically connect a network interface device (NID) located at a subscriber premises to a connectorized fiber optic distribution cable at a connection terminal, such as an aerial closure, an above-ground telecommunications pedestal or a buried closure. In serving the foregoing function, the present invention facilitates the deployment of a "fiber to the premises" (FTTP) optical communications network.

In facilitating the deployment of a FTTP network, the present invention functions to permit preselected, standard lengths of pre-connectorized fiber optic drop cables to be utilized within the network with any excess length of the fiber optic drop cable (also referred to herein as drop cable slack) stored within the slack storage receptacle external to the NID and in a concealed manner to thereby discourage unauthorized access, and to protect the drop cable slack from inadvertent damage or direct exposure to adverse environmental conditions. As is well known and understood in the art, a FTTP network generally comprises a fiber optic distribution cable, one or more optical connection terminals, such as a local convergence cabinet, a network access point closure or a telecommunications pedestal, at least one optical NID located at a subscriber premises and a pre-connectorized fiber optic drop cable that extends between a connection terminal and the NID. Generally, the present invention provides an apparatus for storing and protecting the drop cable slack that typically results when a preselected standard length of pre-connectorized fiber optic drop cable is deployed between an optical connection terminal and an optical NID. Further, the present invention provides a cost effective manner of deploying a pre-connectorized fiber optic drop cable at a subscriber premises prior to the installation of the NID or prior to connection of the NID to a connection terminal.

By way of example only, and not by way of limitation, the slack storage receptacle of the present invention will hereinafter be described as a wall-mounted receptacle. However, it will be understood by those skilled in the art that the slack storage receptacle may also be employed in an aerial, above-ground or buried installation. As such, the slack storage receptacle may be provided with hangers (not shown) for suspending the storage receptacle from an aerial cable strand and/or brackets or straps for securing the slack storage receptacle to a telephone pole or to a buried or above-ground connection terminal, or to any other convenient structure in the vicinity of an aerial, above-ground or buried connection terminal.

Referring now to the drawings, FIGS. **1** and **2** show a slack storage receptacle, indicated generally at **10**, constructed in accordance with an exemplary embodiment of the present invention. The slack storage receptacle **10** is relatively thin and made of a lightweight, yet rigid material such as aluminum, plastic, thermoplastic or composite that is configured to be mounted adjacent to, and preferably behind, a conventional NID **108** (FIG. **2**), such as the SABRE® NID available from Corning Cable Systems LLC of Hickory, N.C., shown herein. The slack storage receptacle **10** may have a variety of shapes that are suitable for storing and protecting drop cable slack, but is preferably generally rectangular in configuration, as shown. Preferably, the slack storage receptacle **10** has a depth dimension that is substantially less than either of its lengthwise or widthwise dimensions. The slack storage receptacle **10** comprises a housing **12** and a drawer **14** that is adapted to cooperate in sliding engagement with the housing **12** for movement between an opened configuration and a closed configuration.

To facilitate long-term trouble free service and so as to not interfere with the functions of the NID **108**, the slack storage receptacle **10** stores and protects an excess length of a pre-connectorized fiber optic drop cable **102** external to the NID **108** without violating the minimum bend radius of the drop cable **102**. This is desirable since bending a fiber optic cable to less than its minimum bend radius may damage the optical fibers and/or impair the optical transmission characteristics of the cable. Typically, the minimum bend radius of the fiber optic drop cable **102** is at least about 1.5 inches.

The housing **12** comprises a substantially planar rear panel **20** that includes at least one, and as shown, four recessed mounting ports **22** for receiving a fastener (not shown) to secure the housing **12** to an exterior wall of the subscriber premises, a top wall **24** and a bottom wall **26**. The top wall **24** and the bottom wall **26** of the housing **12** each have a lip, **28** and **30** respectively, extending therefrom and projecting inwardly towards the opposite wall **26** or **24**. Further, at least one of the top wall **24** and the bottom wall **26** has a plurality of biased locking pins **32** for securing the drawer **14** in an opened configuration or a closed configuration. The locking pins **32** are biased inwardly in the direction of the drawer **14** in any suitable manner, for example, by a coil spring retained within a closed cylinder between the outer surface of the top wall **24** and the inner surface of the cylinder. As a result, the slack storage receptacle **10** may be mounted on the exterior wall of the subscriber premises in any orientation and the locking pins **32** will still secure the drawer **14** within the housing **12**. Preferably, however, the slack storage receptacle **10** is mounted on the exterior wall of the subscriber premises such that the locking pins **32** are lifted vertically upwards against the biasing force to permit the drawer **14** to slide relative to the housing **14**. Furthermore, the locking pins **32** are offset laterally and located at opposing ends of the wall **24**, **26** to which they are affixed. Thus, as will be described, the drawer **14** is adapted to slide relative to the housing **12** in either horizontal direction (i.e., to the left or as shown to the right) between the top wall **24** and the bottom wall **26**.

Extending upwardly from the top wall **24** and downwardly from the bottom wall **26** of the housing **12** are mounting brackets **34**, **36**, respectively, provided for mounting the NID **108** or a cover plate (not shown) onto the slack storage receptacle **10**. The mounting brackets **34**, **36** extend in the opposite directions of the lips **28**, **30**, respectively. The mounting brackets **34**, **36** may employ any suitable fastening mechanism for mounting the NID **108** onto the slack storage receptacle **10**, such as conventional threaded screws **38**, **40**.

The drawer **14** comprises a substantially planar rear wall **42**, a top wall **44**, a bottom wall **46** and opposed side walls **48** and **50**. Together, the rear wall **42**, the top wall **44**, the bottom wall **46** and the side walls **48**, **50** of the drawer **14** define an interior cavity **52** for receiving and storing the excess length of the fiber optic drop cable **102** that typically results when a drop cable is deployed in an optical communications network between an outside plant connection terminal (not shown) and the NID **108**. Extending from each of the side walls **48**, **50**, the top wall **44** and the bottom wall **46** is a respective lip **54***a*, **54***b*, **54***c*, **54***d* that projects inwardly towards the interior cavity **52** defined by the drawer **14**. The rear wall **42** of the drawer **14** has at least one substantially circular aperture **56** disposed therein. The at least one aperture **56** is coincident with the at least one mounting port **22** of the rear panel **20** of the housing **12** when

the drawer **14** is in the closed configuration to thereby permit a filed technician to access the fastener within the mounting port **22** that secures the housing **12** to the exterior wall of the subscriber premises. A respective one of the top wall **44** and the bottom wall **46** of the drawer **14** has a plurality of openings **58** therethrough that cooperate with the locking pins **32** of the housing **12** in the closed configuration and the opened configuration. In particular, one of the openings **58** is coincident with one of the locking pins **32** in each of the closed and opened configurations.

As illustrated in FIG. **1**, the openings **58** comprise a pair of openings located adjacent the right-hand end of the top wall **44** of the drawer **12** and a single opening (hidden in FIG. **1**) located adjacent the left-hand end of the top wall **44** of the drawer **14**. As such, the right-hand locking pin **32** of the housing **12** engages the rearward one of the right-hand openings **58** in the closed configuration and, as shown, engages the left-hand opening **58** in the opened configuration when the drawer **14** is slid horizontally to the right relative to the housing **12**. The left-hand locking pin **32** of the housing **12** engages the forward one of the right-hand openings **58** in the opened configuration when the drawer **14** is slid horizontally to the left relative to the housing **12** (opposite to the opened configuration shown). Advantageously, only one of the locking pins **32** engages one of the openings **58** in the closed configuration and the opened configuration. As a result, a field technician can easily move the drawer **14** between the closed configuration and either opened configuration by releasing only one of the locking pins **32**. The respective top wall **44** or bottom wall **46** is further provided with angled guiding tabs **60** at the opposed ends thereof for permitting the drawer **14** to travel past the corresponding locking pin **32** while being moved from either of the opened configurations to the closed configuration. In particular, the guiding tab **60** engages the lower end of the corresponding locking pin **32** and forces it upwardly against the biasing force and onto the outer surface of the top wall **44** of the drawer **14** so that the drawer **14** can slide relative to the housing **12** until the right-hand locking pin **32** engages the rearward one of the right-hand openings **58** in the closed configuration. When the drawer **14** is positioned in either of the opened configurations, a field technician can easily arrange one or more coils of the drop cable **102** within the interior cavity **52** so that the naturally occurring outward bias of the drop cable coils presses the drop cable **102** against the interior surfaces of the top wall **44**, the bottom wall **46** and the opposed side walls **48**, **50** of the drawer **14**. Thus, the drop cable slack is retained within the drawer **14** of the slack storage receptacle **10**, while maintaining the minimum bend radius of the fiber optic drop cable **102**. The drawer **14** may then be slid relative to the housing **12** and positioned in the closed configuration to securely store and protect the drop cable slack within the slack storage receptacle **10**.

The slack storage receptacle **10** is adapted to store the drop cable slack externally to the NID **108** at any suitable location between the NID **108** and an outside plant optical connection terminal, for example, an aerial, above-ground or below grade closure. Preferably, the slack storage receptacle **10** is secured to an exterior wall of a subscriber premises utilizing at least one of the mounting ports **22** and respective conventional fasteners, and the NID **108** is mounted onto the slack storage receptacle **10** utilizing at least one of the mounting brackets **34**, **36** and the respective threaded screw **38**, **40**. However, the slack storage receptacle **10** may instead be secured in the vicinity of an outside plant connection terminal (not shown) of the optical network at a location remote from the NID **108**. For example, but without limitation, the slack storage receptacle **10** may be secured at an aerial location in the vicinity of an aerial closure, at an above-ground location in the vicinity of a telecommunications pedestal, or at a buried location in the vicinity of a below grade closure. Regardless, the drop cable slack is stored external to the NID **108** in a concealed manner to discourage unauthorized access and to protect the drop cable slack from inadvertent damage or direct exposure to adverse environmental conditions.

In an exemplary method, the slack storage receptacle **10** is first mounted to an exterior wall of a subscriber premises utilizing at least one of the mounting ports **22** and respective conventional fasteners. The NID **108** is next mounted onto the housing **12** of the slack storage receptacle **10** utilizing at least one of the mounting brackets **34**, **36** and the respective threaded screw **38**, **40**. The pre-connectorized fiber optic drop cable **102** is connected to and routed from an outside plant connection terminal to the NID **108**. The drawer **14** of the slack storage receptacle **10** is then moved from the closed configuration to the opened configuration in the manner previously described. Any excess length of the drop cable **102** is then inserted into the interior cavity **52** of the drawer **14** and coiled between the top wall **44**, the bottom wall **46** and the opposed side walls **48**, **50** in the manner illustrated in FIG. **1**. The drop cable slack is inserted and coiled beginning with the portion of the drop cable **102** closest to the connection terminal and enough of the free end of the drop cable **102** is left outside the drawer **14** to form a drip loop **104** (FIG. **2**) between the slack storage receptacle **10** and the NID **108**. Finally, the drawer **14** is then moved from the opened configuration to the closed configuration in the manner previously described and the free end of the drop cable **102** is connected to the NID **108**. An elongate, flexible shield **106**, indicated generally by the broken lines in FIG. **2**, may be positioned over the drip loop **104** for purposes of aesthetics and/or safety. The shield **106** may be made of a thin metal, plastic, thermoplastic or composite material and may be formed as a smooth or corrugated tube having an inner diameter greater than the outer diameter of the fiber optic drop cable **108**. Alternatively, the shield **106** may be formed as a pre-molded semi-circular cover secured at each end to the slack storage receptacle **10** and the NID **108**. If the NID **108** is not present or is not ready to be connected, the free end of the drop cable **102** may be stored within the storage receptacle **10** until needed to protect the drop cable **102** from inadvertent damage or direct exposure to adverse environmental conditions. Thus, it is possible to pre-install the drop cable **102** for later use, or if the NID **108** is removed, to store and protect the drop cable **102** within the slack storage receptacle **10** until the NID **108** is re-installed. If the NID **108** is not present, an optional cover plate (not shown) may be secured in its place over the housing **12** of the slack storage receptacle **10**.

FIGS. **3** and **4** show an alternative embodiment of a slack storage receptacle **100** constructed in accordance with the present invention. The slack storage receptacle **100** consists of a generally rectangular housing comprising a top wall **112**, a bottom wall **114**, opposed side walls **116** and **118**, and a rear panel **120**. Together, the top wall **112**, the bottom wall **114**, the side walls **116**, **118** and the rear panel **120** generally form an open box-like structure defining an interior cavity **122** for storing one or more coils of excess length of a pre-connectorized fiber optic drop cable **102**. The slack storage receptacle **100** is relatively thin and made of a lightweight, yet rigid material such as aluminum, plastic, thermoplastic or composite that is configured to be mounted

adjacent to, and preferably behind, a conventional NID **108**, such as the SABRE® NID available from Corning Cable Systems LLC of Hickory, N.C., shown herein. The slack storage receptacle **100** may have a variety of shapes that are suitable for storing and protecting drop cable slack, but is preferably generally rectangular in configuration, as shown. Preferably, the slack storage receptacle **100** has a depth dimension that is substantially less than either of its lengthwise or widthwise dimensions.

At least one, and preferably both, of the side walls **116** and **118** include at least one cable entrance and exit opening **124** located medially between the opposed ends of the respective side wall **116**, **118**. The opening **124** may be so designed with radiused surfaces and or guides (not shown) so as to prevent possible bending or kinking that may damage the drop cable **102**. As shown, at least one routing guide **126** is provided along the outer surface of the side wall **116** for guiding the drop cable **102** into and away from the cable opening **124**. While the illustrated embodiment shows at least one routing guide **126**, it will be appreciated by those skilled in the art that other known guiding devices may be used to route the drop cable **102** to and from the opening **124**, including, but not limited to, flanges, tabs, loops and cable ties. At least one mounting feature **130** for mounting the NID **108** onto the slack storage receptacle **100** is provided on the housing. Preferably, a mounting feature **130** is provided on each of the lower corners of the housing adjacent the respective side wall **116**, **118** and the bottom wall **114**. The mounting feature **130** may be any conventional type of mount for securing the NID **108** to the slack storage receptacle **100**, including, but not limited to, clasps, snap joints, screws and locking pins. Located medially between the opposed ends **132** and **134** of the top wall **112** is a hinge assembly **136** adapted to receive the NID **108** such that the NID **108** is hingedly affixed to the housing. As shown, the hinge assembly **136** comprises at least one hanger **138** for hingedly engaging the NID **108**. Alternatively, a cover plate (not shown) may be mounted onto the housing over the interior cavity **122** in place of the NID **108**. The mounting features **130** and the hinge assembly **136** permit a field technician to removably position the NID **108** over the interior cavity **122** of the slack storage receptacle **100** to temporarily store, protect and conceal the excess length of the fiber optic drop cable **102**, as will be described hereinafter. In particular, the hinge assembly **136** permits the NID **108** to hang freely from the slack storage receptacle **100** and to be rotated upwardly relative to the slack storage receptacle **100** to expose the interior cavity **122**. As best shown in FIG. **3**, the hinge assembly **136** is disposed centrally on the top wall **112**. However, it will be readily appreciated by those skilled in the art that the hinge location **136** may be located anywhere along the top wall **112**. Furthermore, the mounting features **130** could be provided on each of the upper corners of the housing adjacent the respective side wall **116**, **118** and the top wall **112**, and the hinge assembly **136** could be inverted and disposed along the bottom wall **114**.

Affixed to the rear panel **120** and centrally disposed thereon is an inner hub **140**. The inner hub **140** projects outwardly from the rear panel **120** and has a plurality of radially outwardly extending retaining flanges **148** that are circumferentially spaced around the inner hub **140**. The interior area **146** of the inner hub **140** preferably comprises a plurality of radially disposed stiffening ribs **150** to strengthen and prevent distortion of the rear panel **120** and the inner hub **140** caused, for example, extreme temperature fluctuations that may occur during, shipping, deployment or service. Disposed within the interior area **146** of the inner hub **140** is at least one, and preferably, a plurality of mounting ports **152** for securing the housing to an exterior wall of the subscriber premises. As shown, the mounting ports **152** comprise a pair of elongated slots oriented generally perpendicular to one another for receiving a conventional fastener, such as a threaded screw or bolt, a wing nut, clasp, clip, or hanger. The rear panel **120** is also provided with an outer hub **154** spaced laterally (i.e., radially outwardly) from the inner hub **140** such that the outer hub **154** substantially surrounds the inner hub **140** to form a cable channel **156** in which the drop cable slack is retained. The cable channel **156** is dimensioned to have a minimum radius of curvature equal to or greater than the minimum bend radius of the drop cable **102**. As shown, an upper portion **158** and a lower portion **162** of the outer hub **154** extend continuously between the cable entrance and exit openings **124** provided on the opposed side walls **116**, **118**. The outer hub **154** may be provided with a plurality of retaining flanges **164** that extend radially inwardly into the cable channel **156** to permit a filed technician to easily position coils of the drop cable slack within the cable channel **156**. Preferably, the plurality of retaining flanges **148** are equally spaced apart and the plurality of retaining flanges **164** are likewise equally spaced apart. However, it will be readily appreciated by those skilled in the art that any manner of spacing may be employed.

As previously described with reference to the embodiment shown in FIGS. **1** and **2**, the alternative embodiment of the slack storage receptacle **100** shown in FIGS. **3** and **4** is adapted to store the drop cable slack externally to the NID **108** at any suitable location between the NID **108** and an outside plant optical connection terminal, for example, an aerial, above-ground or below grade closure. Preferably, the slack storage receptacle **100** is secured to an exterior wall of a subscriber premises utilizing at least one of the mounting ports **152** and respective conventional fasteners, and the NID **108** is mounted onto the slack storage receptacle **100** utilizing the hinge assembly **136** and at least one of the mounting features **130** and respective conventional fasteners. However, the slack storage receptacle **100** may be mounted on the exterior wall of the subscriber premises with or without the NID **108** mounted thereon. Furthermore, the slack storage receptacle **100** may instead be secured in the vicinity of an outside plant connection terminal (not shown) of the optical network at a location remote from the NID **108**. For example, but without limitation, the slack storage receptacle **100** may be secured at an aerial location in the vicinity of an aerial closure, at an above-ground location in the vicinity of a telecommunications pedestal, or at a buried location in the vicinity of a below grade closure. Regardless, the drop cable slack is stored external to the NID **108** in a concealed manner to discourage unauthorized access and to protect the drop cable slack from inadvertent damage or direct exposure to adverse environmental conditions.

In an exemplary method, the slack storage receptacle **100** is first mounted to an exterior wall of a subscriber premises utilizing at least one of the mounting ports **152** and respective conventional fasteners. The pre-connectorized fiber optic drop cable **102** is next connected to and routed from an outside plant connection terminal to the NID **108**. The drop cable **102** is then guided along the outer surface of the appropriate side wall **116**, **118** utilizing one or more of the routing guides **126** and any excess length of the drop cable **102** is inserted into the cable channel **156** through the corresponding cable entrance and exit opening **124**. The drop cable slack is then coiled between the inner hub **140**

and the outer hub **154** in the manner illustrated in FIG. **3**. The drop cable slack is inserted and coiled beginning with the portion of the drop cable **102** closest to the connection terminal and enough of the free end of the drop cable **102** is left outside the housing to form a drip loop **104** (FIG. **4**) between the slack storage receptacle **100** and the NID **108**. Finally, the NID **108** is mounted onto the slack storage receptacle **100** utilizing the hinge assembly **136** and at least one of the mounting features **130** and respective conventional fasteners, and the free end of the drop cable **102** is connected to the NID **108**. An elongate, flexible shield **106**, indicated generally by the broken lines in FIG. **4**, may be positioned over the drip loop **104** for purposes of aesthetics and/or safety. The shield **106** may be made of a thin metal, plastic, thermoplastic or composite material and may be formed as a smooth or corrugated tube having an inner diameter greater than the outer diameter of the fiber optic drop cable **108**. Alternatively, the shield **106** may be formed as a pre-molded semi-circular cover secured at each end to the slack storage receptacle **100** and the NID **108**. If the NID **108** is not present or is not ready to be connected, the free end of the drop cable **102** may be stored within the storage receptacle **100** until needed to protect the drop cable **102** from inadvertent damage or direct exposure to adverse environmental conditions. Thus, it is possible to pre-install the drop cable **102** for later use, or if the NID **108** is removed, to store and protect the drop cable **102** within the slack storage receptacle **100** until the NID **108** is re-installed. If the NID **108** is not present, an optional cover plate (not shown) may be secured in its place over the housing of the slack storage receptacle **100**.

FIGS. **5** and **6** show yet another alternative embodiment of a slack storage receptacle **200** constructed in accordance with the present invention. As best shown in FIG. **5**, the slack storage receptacle **200** consists of a housing **212** having a generally oval-shaped configuration, a top cover **214** and a bottom cover **216**. Together, the housing **212**, the top cover **214** and the bottom cover **216** generally form an oval-shaped structure defining an interior cavity **222** and a cable channel **232**, as will be described, for storing one or more coils of excess length of a pre-connectorized fiber optic drop cable **102**. The slack storage receptacle **200** is relatively thin and made of a lightweight, yet rigid material such as aluminum, plastic, thermoplastic or composite that is configured to be mounted adjacent to, and preferably surrounding, a conventional NID **108**, such as the SABRE® NID available from Corning Cable Systems LLC of Hickory, N.C., shown herein. The slack storage receptacle **200** of this alternative embodiment may have a variety of shapes that are suitable for storing and protecting drop cable slack, but is preferably generally oval-shaped as shown to minimize the amount of space around the NID **108** needed to accommodate the slack storage receptacle **200**. Preferably, the slack storage receptacle **200** has a depth dimension that is substantially less than either of its lengthwise or widthwise dimensions.

As shown herein, the housing **212** comprises a generally oval-shaped rear panel **220** and a side wall **218** that together define an interior cavity **222** and an annular cable channel **232**. The cable channel **232** is dimensioned to have a minimum radius of curvature equal to or greater than the minimum bend radius of the drop cable **102** and to extend radially beyond the outer periphery of the NID **108**. The rear panel **220** comprises a generally planar back wall **221** and the side wall **218** extends outwardly from the back wall **221** substantially continuously along the outer perimeter of the back wall **221**. As shown herein, the back wall **221** of the rear panel **220** comprises a first means (not shown) for securing the housing **212** to the exterior wall of a subscriber premises. The first means may comprise, for example, one or more elongate slots provided on the back wall **221** for receiving a conventional fastener, such as a threaded screw or bolt, a wing nut, clasp, clip, or hanger. The back wall **221** of the rear panel **220** further comprises a second means (not shown) for securing the NID **220** to the housing **212**. Similarly, the second means may comprise, for example, one or more elongate slots provided on the NID **108** for receiving a conventional fastener, such as a threaded screw or bolt, a wing nut, clasp, clip, or hanger. Preferably, the side wall **218** is provided with a plurality of circumferentially spaced apart retaining flanges **228** affixed to the interior surface of the side wall **218** and extending radially inwardly. Together, the side wall **218** and the retaining flanges **228** form the cable channel **232** for storing coils of the drop cable slack within the housing **212**. At least one, and preferably, more than one cable transition opening **224** is provided through the side wall **218** at a predetermined location for transitioning the drop cable slack into or out of the housing **212**. One or more cable routing guides **226** may also be provided on the back wall **221** adjacent the side wall **218** to guide and retain the drop cable slack in the cable channel **232**. A plurality of projecting studs **236** are located peripherally along the exterior surface of the side wall **218** for engaging corresponding retaining mechanisms **246** provided on the top cover **214** and the bottom cover **216**. The projecting studs **236** and the retaining mechanisms **246** securely retain the top and bottom covers **214**, **216** in alignment on the housing **212**, and thereby form a fully enclosed assembly around the periphery of the NID **108**.

The top cover **214** and the bottom cover **216** each comprise a partial front wall **240**, **250**, respectively, that overlies the rear panel **220** of the housing **212** and an outer wall **242**, **252**, respectively, that is sized so as to overlap and engage the side wall **218** of the housing **212**. The outer wall **242** of the top cover **214** has at least one opening or recess therethrough that defines a cable transition duct **244** for transitioning the drop cable slack into the top cover **214**. Similarly, the outer wall **252** of the bottom cover **216** has at least one opening or recess therethrough that defines a cable transition duct **254** for transitioning the drop cable slack out of the bottom cover **216**. Each cable transition duct **246**, **254** is coincident with a corresponding cable transition opening **224** provided on the side wall **218** of the housing **212** when the top cover **214** and the bottom cover **216** are assembled on the housing **212**. Accordingly, the cable transition duct **244** of the top cover **214** and the corresponding cable transition opening **224** of the housing **212** allow the drop cable **102** to enter the slack storage receptacle **200**, while the cable transition duct **254** of the bottom cover **216** and the corresponding cable transition opening **224** of the housing **212** allow the drop cable **102** to exit the slack storage receptacle **200**. The top cover **214** is provided with at least one retaining mechanism, such as an elongate slot **260**, for engaging a corresponding retaining mechanism, such as a latch **262**, to securely retain the top cover **214** and the bottom cover **216** together on the housing **212** in the fully assembled configuration previously described. A cutaway portion **248** centrally disposed in the front wall **240** of the top cover **214** is shaped to conform to the outer contour of the upper portion of the NID **108**. Similarly, a cutaway portion **258** centrally disposed in the front wall **250** of the bottom cover **216** is shaped to conform to the outer contour of the lower portion of the NID **108**. Thus, the top cover **214** and the bottom cover **216** are adapted to cooperate with each other

to conform to the contour of the outer periphery of the NID **108** when the latch **262** provided on the bottom cover **216** engages the slot **260** provided on the top cover **214**.

As previously described with reference to the embodiments shown in FIGS. **1** and **2** and FIGS. **3** and **4**, the alternative embodiment of the slack storage receptacle **200** shown in FIGS. **5** and **6** is adapted to store the drop cable slack externally to the NID **108** at any suitable location between the NID **108** and an outside plant optical connection terminal, for example, an aerial, above-ground or below grade closure. Preferably, the housing **212** is secured to an exterior wall of a subscriber premises utilizing the first mounting means and respective conventional fasteners, the NID **108** is mounted onto the housing **212** using the second mounting means and respective conventional fasteners, and the top and bottom covers **214**, **216** are secured on the housing **212** and around the NID **108**. Alternatively, the rear panel **220** may be eliminated and the housing **212** consisting of only the side wall **218** may be positioned around a NID **108** already secured to an exterior wall of a subscriber premises. The top cover **214** and the bottom cover **216** can then be secured on the housing **212** and around the NID **108**, as previously described. However, the slack storage receptacle **200** may be mounted on the exterior wall of the subscriber premises with or without the NID **108** mounted thereon. Furthermore, the slack storage receptacle **200** may instead be secured in the vicinity of an outside plant connection terminal (not shown) of the optical network at a location remote from the NID **108**. For example, but without limitation, the slack storage receptacle **200** may be secured at an aerial location in the vicinity of an aerial closure, at an above-ground location in the vicinity of a telecommunications pedestal, or at a buried location in the vicinity of a below grade closure. Regardless, the drop cable slack is stored external to the NID **108** in a concealed manner to discourage unauthorized access and to protect the drop cable slack from inadvertent damage or direct exposure to adverse environmental conditions.

In an exemplary method, the housing **212** of the slack storage receptacle **200** is first positioned around the outer periphery of the NID **108** already mounted to an exterior wall of a subscriber premises. The pre-connectorized fiber optic drop cable **102** is next connected to and routed from an outside plant connection terminal to the NID **108**. The drop cable **102** is then guided through the cable transition duct **244** provided on the top cover **214** and through the upper cable transition opening **224** provided on the side wall **218** of the housing **212** to enter the slack storage receptacle **200**. Any excess length of the drop cable **102** is next coiled and inserted into the cable channel **232** between the retaining flanges **228** provided on the side wall **218** in the manner illustrated in FIG. **5**. The drop cable slack is inserted and coiled beginning with the portion of the drop cable **102** closest to the connection terminal and enough of the free end of the drop cable **102** is left outside the housing **212** to form a drip loop **104** (FIG. **6**) between the slack storage receptacle **200** and the NID **108**. The free end of the drop cable **102** is then guided through the lower cable transition opening **224** provided on the side wall **218** of the housing **212** and through the cable transition duct **254** provided on the bottom cover **216** to exit the slack storage receptacle **200**. Finally, the top cover **214** and the bottom cover **216** are secured on the housing **212** and around the NID **108** such that the slack storage receptacle **200** is retained between the exterior wall of the subscriber premises and the outer periphery of the NID **108**. An elongate, flexible shield **106**, indicated generally by the broken lines in FIG. **6**, may be positioned over the drip loop **104** for purposes of aesthetics and/or safety. The shield **106** may be made of a thin metal, plastic, thermoplastic or composite material and may be formed as a smooth or corrugated tube having an inner diameter greater than the outer diameter of the fiber optic drop cable **108**. Alternatively, the shield **106** may be formed as a pre-molded semi-circular cover secured at each end to the slack storage receptacle **200** and the NID **108**. If the NID **108** is not present, the housing **212** including the rear panel **220** can be mounted on the exterior wall of the subscriber premises and the drop cable slack stored within the slack storage receptacle **200** in the manner previously described. If the NID **108** is present, but is not ready to be connected, the free end of the drop cable **102** may be stored within the slack storage receptacle **200** until needed to protect the drop cable **102** from inadvertent damage or direct exposure to adverse environmental conditions. Thus, it is possible to pre-install the drop cable **102** for later use, or if the NID **108** is removed, to store and protect the drop cable **102** within the slack storage receptacle **200** until the NID **108** is re-installed.

FIG. **7** shows yet another alternative embodiment of a slack storage receptacle **300** constructed in accordance with the present invention. The slack storage receptacle **300** consists of a generally box-shaped housing **312**, a cover **314** and a storage means **330** disposed within the housing **312**. Together, the housing **312** and the cover **314** generally form a rectangular box-shaped structure defining an interior cavity **322** that receives the storage means **330**, as will be described, for storing one or more coils of excess length of a pre-connectorized fiber optic drop cable **102**. The slack storage receptacle **300** is made of a lightweight, yet rigid material such as aluminum, plastic, thermoplastic or composite that is configured to be buried in the ground adjacent to a conventional NID (not shown), such as the SABRE® NID available from Corning Cable Systems LLC of Hickory, N.C. shown in the previous embodiments. The slack storage receptacle **300** of this alternative embodiment may have a variety of shapes that are suitable for storing and protecting drop cable slack, but is preferably generally box-shaped as shown to facilitate shipping and deployment of the fiber optic drop cable **102**, as will be described. Preferably, the slack storage receptacle **300** has a depth dimension that is somewhat less than either of its lengthwise or widthwise dimensions.

The housing **312** comprises a rear panel **320**, a top wall **315**, a bottom wall **317** and two opposed side walls **316** and **318**, which together with the cover **314** define the interior cavity **322**. The storage means **330** is approximately centrally disposed within the interior cavity **322** and comprises a hub **326** affixed to the rear panel **320** and a reel **324** for storing the fiber optic drop cable **102**. The reel **324** is sized so as to have a radius of curvature equal to or greater than the minimum bend radius of the drop cable **102**. The hub **326** extends upwardly from the interior surface of the rear panel **320** and the reel **324** is mounted on the smooth exterior of the hub **326** such that the reel **324** rotates freely relative to the hub **326**. As shown, the reel **324** comprises an inner wall **328** adjacent the hub **326** and an outer wall **332** spaced radially outwardly from the inner wall **328**. However, the inner wall **328** and the outer wall **332** may be coincident in order to maximize the length of the fiber optic drop cable **102** that can be stored on the reel **324**. Regardless, the outer wall **332** defines a generally cylindrical surface for receiving the fiber optic drop cable **102**. The reel **324** further comprises a pair of spaced apart flanges **334** and **336** for retaining the fiber optic drop cable **102** on reel **324**. The

flanges **334**, **336** are generally parallel to one another and generally perpendicular to a plane tangent to the outer wall **332**. As shown in FIG. **7**, the reel **324** also comprises a bend radius guide **340** disposed on the outer wall **332** and extending radially outwardly therefrom. The bend radius guide **340** has a radius of curvature that is greater than the minimum bend radius of the fiber optic cable **102** and thereby permits a factory installer or a field technician to reverse the direction in which the fiber optic drop cable **102** is wound onto or paid off (i.e., unwound) the reel **324**. A handle (not shown) may also be provided on the flange **336** adjacent the cover **314** for rotating the reel **324** so that the fiber optic drop cable **102** can be wound onto the reel **324** during manufacturing or assembly and paid off the reel **324** to deploy the fiber optic drop cable **102** between, for example, an outside plant connection terminal in an optical communications network (not shown) and the NID at the subscriber location. In particular, the bend radius guide **340** permits both connectorized ends of the fiber optic drop cable **102** to be paid off the reel **324** in the same direction and at the same time. Accordingly, the slack storage receptacle **300** may be located approximately midway between the connection terminal and the NID to facilitate deployment of the fiber optic drop cable **102**.

The storage means **330** may further comprise a securing mechanism (not shown) to secure the reel **324** against rotation relative to the fixed hub **326** within the slack storage receptacle **300** during shipment, as well as to apply a small amount of friction to the reel **324** as the fiber optic drop cable **102** is being paid off during deployment, thereby avoiding unwanted loosening of the drop cable **102** that remains on the reel **324**. For protection against adverse environmental conditions during shipping and deployment, the cover **314** may be mounted onto the housing **312** in a sealed manner utilizing a conventional gasket (not shown) and conventional fasteners, such as threaded screw or bolts, received in openings **350** provided in the top, bottom and/or side walls **315**, **316**, **317**, **318** of the housing **312**. Although not shown, the cover **314** may be hinged or otherwise restrained for rotational movement relative to the housing **312** and a strap may be provided to limit the movement of the cover **314** relative to the housing **312**. Further, the cover **314** and/or the housing **312** may be provided with stiffening ribs (not shown) to prevent distortion. Finally, the bottom wall **315** of the housing **312** has a cable opening **354** through which the drop cable **102** may enter the slack storage receptacle **300** to be wound onto the reel **324** and may exit the slack storage receptacle to be paid off the reel **324**. The housing **312** is further provided with a cap **356** for protecting the fiber optic drop cable **102**, and in particular the connectorized ends of the drop cable **102**, which are stored adjacent the cable opening **352** during shipment. The cap **356** is preferably removable, however, it will be readily appreciated by those skilled in the art that the cap **356** may comprise a flexible material that allows the cap **356** to be moved relative to the remainder of the housing **312**, thereby permitting the drop cable **102** to enter and exit the slack storage receptacle **300**.

As previously described with reference to the embodiment shown in FIGS. **1** and **2**, the alternative embodiment of the slack storage receptacle **300** shown in FIG. **7** is adapted to store the drop cable slack externally to a NID at any suitable location between the NID and an outside plant optical connection terminal, for example, an aerial, aboveground or below grade closure. Preferably, the slack storage receptacle **300** is buried in the ground adjacent a NID located at a subscriber premises. However, the slack storage receptacle **300** may instead be buried in the ground in the vicinity of an outside plant connection terminal (not shown) of the optical network at a location remote from the NID. For example, but without limitation, the slack storage receptacle **300** may be buried in the vicinity of an aerial closure, in the vicinity of a telecommunications pedestal, or in the vicinity of a below grade closure. Regardless, the drop cable slack is stored external to the NID in a concealed manner to discourage unauthorized access and to protect the drop cable slack from inadvertent damage or direct exposure to adverse environmental conditions.

In an exemplary method, the slack storage receptacle **300** is manufactured and factory-assembled for shipment to the service provider. In particular, the fiber optic drop cable **102** is wound onto the reel **324** in, for example, a counterclockwise direction until a sufficient length of the drop cable **102** is stored on the lower portion of the reel **324**. The drop cable **102** is then guided around the bend radius guide **340** and the remainder of the drop cable **102** is wound onto the upper portion of the reel **324** in the opposite (i.e., clockwise) direction. The reel **324** is positioned on the hub **326** within the housing **312** with the connectorized ends of the fiber optic drop cable **102** secured within the cap **356** and the cover **314** secured on the housing **312** by conventional fasteners received in openings **350**. The pre-assembled slack storage receptacle **300** with the fiber optic drop cable **102** stored therein is then shipped to the site where the fiber optic drop cable **102** is to be deployed, for example, between an outside plant connection terminal and a NID in an optical network, and the slack storage receptacle **300** is positioned at a suitable location, for example, about midway between the connection terminal and the NID. The cap **356** is next removed or opened to provide access to the connectorized ends of the fiber optic drop cable **102**. The connectorized ends of the fiber optic drop cable **102** are then paid off the reel **324** by rotating the reel **324** clockwise sufficiently to connect the connectorized ends to the connection terminal and the NID, respectively. The connections are made, and if necessary, the cover **314** is removed and any excess length of the fiber optic drop cable **102** is wound back onto the reel **324**, either by rotating the reel **324** counterclockwise or by hand looping the drop cable slack onto the upper and lower portions of the reel **324**. The cover **314** is then replaced and the slack storage receptacle **300** is buried underground. Although not essential, the cap **356** may also be replaced if desired. If the NID **108** is not present or is not ready to be connected, the connectorized ends of the drop cable **102** may be stored within the slack storage receptacle **300** until needed to protect the drop cable **102** from inadvertent damage or direct exposure to adverse environmental conditions. Thus, it is possible to pre-install the drop cable **102** for later use, and to bury the slack storage receptacle **300** and the drop cable slack.

FIG. **8** shows yet another alternative embodiment of a slack storage receptacle **400** constructed in accordance with the present invention. The slack storage receptacle **400** is essentially identical to the slack storage receptacle **300** previously described with reference to FIG. **7**, except the reel **324** of the storage means **330** is replaced with an alternative reel **424** for storing one or more coils of excess length of a pre-connectorized fiber optic drop cable **102**. The reel **424** comprises three spaced apart flanges **434**, **436**, **442** for retaining the fiber optic drop cable **102** on reel **424**. The flanges **434**, **436**, **442** are generally parallel to one another and generally perpendicular to a plane tangent to the outer wall **432**. In particular, the outer flanges **434**, **436** are located adjacent the lateral edges of the reel **424** and the inner flange **442** is positioned on the outer wall **432** medially between the

outer flanges **434**, **436**, but preferably nearer to the upper outer flange **434**, as shown in FIG. **8**. The inner flange **442** has a radially inwardly extending slot **444** therethrough for transitioning the fiber optic drop cable **102** from a lower portion of the reel **424** to an upper portion of the reel **424**. The slot **444** permits a factory installer or a field technician to wind a substantially longer length of the fiber optic drop cable **102** onto the lower portion of the reel **424** and to separate the longer length from a shorter length of the fiber optic drop cable **102** that is wound onto the upper portion of the reel **424** in the same direction, for example, counterclockwise. Thus, the connectorized ends of the fiber optic drop cable **102** may not be paid off in the same direction and at the same time, as previously described. Instead, one or the other of the connectorized ends must be paid off and the other end unwound from the reel **424** by hand.

In an exemplary method, the slack storage receptacle **400** is manufactured and factory-assembled for shipment to the service provider. In particular, the fiber optic drop cable **102** is wound onto the lower portion of the reel **424** in, for example, a counterclockwise direction until a sufficient length of the drop cable **102** is stored on the lower portion of the reel **424**. The drop cable **102** is then guided through the slot **444** formed in the inner flange **442** and the remainder of the drop cable **102** is wound onto the upper portion of the reel **424** in the same (i.e., counterclockwise) direction. Preferably, the length of the drop cable **102** stored on the lower portion of the reel **424** is substantially longer than the length of the drop cable **102** stored on the upper portion of the reel **424**. The reel **424** is positioned on the hub **326** within the housing **312** with the connectorized end of the fiber optic drop cable **102** stored on the lower portion of the reel **424** secured within the cap **356**. The connectorized end of the fiber optic drop cable **102** stored on the upper portion of the reel **424** may be secured within the cap **356**, but preferably, is secured within the upper portion of the reel **424**, as shown in FIG. **8**. The cover **314** is then secured on the housing **312** by conventional fasteners received in openings **350**. The pre-assembled slack storage receptacle **400** with the fiber optic drop cable **102** stored therein is then shipped to the site where the fiber optic drop cable **102** is to be deployed, for example, between an outside plant connection terminal and a NID in an optical network, and the slack storage receptacle **400** is positioned at a suitable location, for example, adjacent the NID. The cap **356** is next removed or opened to provide access to the connectorized end of the fiber optic drop cable **102** stored on the lower portion of the reel **424**. The connectorized end of the fiber optic drop cable **102** stored on the lower portion of the reel **424** is then paid off the reel **424** by rotating the reel **424** in a clockwise direction sufficiently to connect the connectorized end to the connection terminal. The cover **314** is removed and the connectorized end of the fiber optic drop cable **102** stored on the upper portion of the reel **424** is then unwound from the reel **424** by hand in a clockwise direction sufficiently to connect the connectorized end to the NID. The connections are made, and if necessary, any excess length of the fiber optic drop cable **102** is wound back onto the reel **424**, either by rotating the reel **424** counterclockwise or by hand looping the drop cable slack onto the upper and lower portions of the reel **424**. The cover **314** is then replaced and the slack storage receptacle **400** is buried underground. Although not essential, the cap **356** may also be replaced if desired. If the NID **108** is not present or is not ready to be connected, the connectorized ends of the drop cable **102** may be stored within the slack storage receptacle **400** until needed to protect the drop cable **102** from inadvertent damage or direct exposure to adverse environmental conditions. Thus, it is possible to pre-install the drop cable **102** for later use, and to bury the slack storage receptacle **400** and the drop cable slack. It will be readily appreciated by those skilled in the art that the slack storage receptacle **400** may be located adjacent the connection terminal and the longer length of the fiber optic drop cable **102** may be paid off and connected to the NID, while the shorter length of the fiber optic drop cable **102** is unwound by hand and connected to the connection terminal.

The foregoing is a description of various embodiments of the invention that are provided here by way of example only. Although the fiber optic drop cable slack storage receptacle has been described with reference to preferred embodiments and examples thereof, other embodiments and examples may perform similar functions and/or achieve similar results. All such equivalent embodiments and examples are within the spirit and scope of the present invention and are intended to be covered by the appended claims.

That which is claimed is:

1. A slack storage receptacle for storing an excess length of a pre-connectorized fiber optic drop cable extending between an optical connection terminal and a network interface device (NID), the slack storage receptacle comprising:

a housing defining an interior cavity adapted to receive one or more coils of the excess length of the fiber optic drop cable;

wherein the excess length of the fiber optic drop cable is stored external to the NID;

wherein the housing further comprises a storage means;

wherein the storage means comprises a drawer adapted to cooperate in sliding engagement with the housing for movement between an opened configuration and a closed configuration.

2. A slack storage receptacle according to claim **1**, wherein the drawer comprises a rear panel and a plurality of walls extending outwardly from the rear panel and wherein the coils of the excess length of the fiber optic drop cable are biased outwardly against the wails of the drawer.

3. A slack storage receptacle according to claim **2**, wherein at least one of the walls comprises an inwardly extending retaining flange for retaining the coils of the excess length of the fiber optic drop cable within the drawer.

4. A slack storage receptacle according to claim **1**, wherein the housing comprises a pair of locking pins and the drawer has a plurality of openings therethrough that cooperate with the locking pins in the closed configuration and the opened configuration such that one of the openings is coincident with one of the locking pins in each of the closed configuration and the opened configuration.

5. A slack storage receptacle according to claim **4**, wherein the drawer comprises a top wall that is provided with angled guiding tabs at the opposed ends thereof for permitting the drawer to travel past a corresponding one of the locking pins while being moved from the opened configuration to the closed configuration.

6. A slack storage receptacle according to claim **5**

wherein the plurality of openings comprise a pair of openings located adjacent one end of the top wall and a single opening located adjacent the opposed end of the top wall;

wherein the pair of locking pins comprises a first locking pin for engaging one of the pair of openings in the closed configuration and the single opening in the opened configuration when the drawer is slid in a first direction relative to the housing and a second locking

pin for engaging the other one of the pair of openings in the opened configuration when the drawer is slid in a second direction opposite the first direction relative to the housing; and

wherein only one of the locking pins engages one of the openings in the closed configuration and the opened configuration.

7. A slack storage receptacle for storing an excess length of a pre-connectorized fiber optic drop cable extending between an optical connection terminal and a network interface device (NID), the slack storage receptacle comprising:

a housing defining an interior cavity adapted to receive one or more coils of the excess length of the fiber optic drop cable;

wherein the excess length of the fiber optic drop cable is stored external to the NID;

wherein the housing further comprises a storage means;

wherein the housing comprises at least one cable entrance and exit opening and wherein the storage means comprises an inner hub and an outer hub spaced radially outwardly from the inner hub to form a cable channel in communication with the cable entrance and exit opening for receiving the coils of the excess length of the fiber optic drop cable within the housing.

8. A slack storage receptacle for storing an excess length of a pre-connectorized fiber optic drop cable extending between an optical connection terminal and a network interface device (NID), the NID defining an exterior surface, the slack storage receptacle comprising:

a housing defining an interior cavity adapted to receive one or more coils of the excess length of the fiber optic drop cable;

wherein the housing is provided outside the exterior surface of the NID such that the excess length of the fiber optic drop able is stored external to the NID;

wherein the housing further comprises a storage means;

wherein the housing further comprises a mounting feature including a hanger for hingedly affixing the NID to the housing such that the NID can be rotated upwardly relative to the housing to expose the excess length of the fiber optic drop cable stored within the slack storage receptacle.

9. A slack storage receptacle for storing an excess length of a pre-connectorized fiber optic drop cable extending between an optical connection terminal and a network interface device (NID), the NID defining an exterior surface, the slack storage receptacle comprising:

a housing defining an interior cavity adapted to receive one or more coils of the excess length of the fiber optic drop cable;

wherein the housing is provided outside the exterior surface of the NID such that the excess length of the fiber optic drop cable is stored external to the NID;

wherein the housing further comprises a storage means;

wherein the storage means comprises a continuous side wall having at least one cable transition opening therethrough and a plurality of circumferentially spaced apart retaining flanges affixed to the side wall and extending radially inwardly therefrom such that the side wall and the retaining flanges form an annular cable channel for receiving the coils of the excess length of the fiber optic drop cable; and

further comprising a top cover and a bottom cover, each of the top cover and the bottom cover comprising a front wall defining a cutaway portion centrally disposed in the front wall that is shaped to conform to the outer contour of the NID such that the top cover and the bottom cover are adapted to cooperate with each other to conform to the contour of the outer periphery of the NID when the top cover and the bottom cover ate positioned over the housing and secured together.

10. A slack storage receptacle for storing an excess length of a pre-connectorized fiber optic drop cable extending between an optical connection terminal and a network interface device (NID), the NID defining an exterior surface, the slack storage receptacle comprising:

a housing defining an interior cavity adapted to receive one or more coils of the excess length of the fiber optic drop cable;

wherein the housing is provided outside the exterior surface of the NID such that the excess length of the fiber optic drop cable is stored external to the NID;

wherein the housing further comprises a storage means;

wherein the storage means comprises a continuous side wall having at least one cable transition opening therethrough and a plurality of circumferentially spaced apart retaining flanges affixed to the side wall and extending radially inwardly therefrom such that the side wall and the retaining flanges form an annular cable channel for receiving the coils of the excess length of the fiber optic drop cable;

wherein the housing further comprises a rear panel affixed to the side wall for mounting the slack storage receptacle on an exterior wall of a subscriber premises.

11. A slack storage receptacle for storing an excess length of a pre-connectorized fiber optic drop cable extending between an optical connection terminal and a network interface device (NID), the slack storage receptacle comprising:

a housing defining an interior cavity adapted to receive one or more coils of the excess length of the fiber optic drop cable;

wherein the excess length of the fiber optic drop cable is stored external to the NID;

wherein the housing further comprises a storage means;

wherein the storage means comprises a hub affixed to the housing and a reel for receiving the coils of the excess length of the fiber optic drop cable thereon and wherein the reel is mounted on the hub such that the reel rotates freely relative to the hub.

12. A slack storage receptacle according to claim **11**, wherein the reel comprises

an inner wall adjacent the hub and an outer wall spaced radially outwardly from the inner wall that defines a generally cylindrical surface for receiving the coils of the excess length of the fiber optic drop cable thereon; and

a pair of spaced apart outer flanges for retaining the fiber optic drop cable on the outer wall of the reel.

13. A slack storage receptacle according to claim **12**, wherein the reel further comprises a bend radius guide disposed on the outer wall and extending radially outwardly therefrom, the bend radius guide having a radius of curvature that is greater than the minimum bend radius of the fiber optic drop cable for reversing the direction in which the fiber optic drop cable is wound onto the reel.

14. A slack storage receptacle according to claim **13**, wherein each end of the fiber optic drop cable has a connectorized end and wherein the fiber optic drop cable may be paid off the reel by pulling the connectorized ends in the same direction and at the same time.

15. A slack storage receptacle according to claim **12**, wherein the reel further comprises an inner flange positioned

on the outer wall and disposed medially between the outer flanges, the inner flange having a radially inwardly extending slot therethrough for transitioning the fiber optic drop cable from a lower portion of the reel to an upper portion of the reel.

16. A slack storage receptacle according to claim **15**, wherein the inner flange is disposed nearer to an upper one of the outer flanges and wherein the slot separates a substantially longer length of the fiber optic drop cable to be wound onto the lower portion of the reel and a shorter length of the fiber optic drop cable wound onto the upper portion of the reel in the same direction.

17. A slack storage receptacle according to claim **16** wherein each end of the fiber optic drop cable has a connectorized end and wherein the fiber optic drop cable must be paid off the reel by pulling one of the connectorized ends in a first direction and by unwinding the other of the connectorized ends by hand in a second direction opposite the first direction.

18. A slack storage receptacle for storing an excess length of a pre-connectorized fiber optic drop cable extending between an optical connection terminal and a network interface device (NID), the NID defining an exterior surface, the slack storage receptacle comprising:

a housing defining an interior cavity adapted to receive one or more coils of the excess length of the fiber optic drop cable;

wherein the housing is provided outside the exterior surface of the NID such that the excess length of the fiber optic drop cable is stored external to the NID;

wherein the housing is secured on an exterior wall of a subscriber premises between the exterior wall and the NID and wherein the NID is mounted on the housing.

19. A slack storage receptacle for storing an excess length of a pre-connectorized fiber optic drop cable extending between an optical connection terminal and a network interface device (NID), the NID defining an exterior surface, the slack storage receptacle comprising:

a housing defining an interior cavity adapted to receive one or more coils of the excess length of the fiber optic drop cable;

wherein the housing is provided outside the exterior surface of the NID such that the excess length of the fiber optic drop cable is stored external to the NID;

wherein the housing is secured on an exterior wall of a subscriber premises between the exterior wall and the NID and wherein the NID is hingedly affixed to the slack storage receptacle and adapted to rotate upwardly relative to the housing.

20. A slack storage receptacle for storing an excess length of a pre-connectorized fiber optic drop cable extending between an optical connection terminal and a network interface device (NID), the NID defining an exterior surface, the slack storage receptacle comprising:

a housing defining an interior cavity adapted to receive one or more coils of the excess length of the fiber optic drop cable;

wherein the housing is provided outside the exterior surface of the NID such that the excess length of the fiber optic drop cable is stored external to the NID;

wherein the NID is secured on an exterior wall of a subscriber premises and wherein the slack storage receptacle is positioned around the NID and adapted to conform to the outer periphery of the NID.

21. A slack storage receptacle for storing an excess length of a pre-connectorized fiber optic drop cable extending between an optical connection terminal and a network interface device (NID), the NID defining an exterior surface, the slack storage receptacle comprising:

a housing defining an interior cavity adapted to receive one or more coils of the excess length of the fiber optic drop cable;

wherein the housing is provided outside the exterior surface of the NID such that the excess length of the fiber optic drop cable is stored external to the NID;

wherein the NID is secured on an exterior wall of a subscriber premises and wherein the slack storage receptacle is buried under the ground.

22. A slack storage receptacle for storing an excess length of a pre-connectorized fiber optic drop cable comprising:

a housing defining an interior cavity and comprising a storage means disposed within the interior cavity for receiving at least a portion of the fiber optic drop cable external to an outside plant optical connection terminal and a network interface device (NID), the NID defining an exterior surface;

wherein the housing is secured to an exterior wall of a subscriber premises between the exterior wall and the exterior surface of the NID and wherein the NID is mounted on the housing.

23. A slack storage receptacle for storing an excess length of a pre-connectorized fiber optic drop cable comprising:

a housing defining an interior cavity and comprising a storage means disposed within the interior cavity for receiving at least a portion of the fiber optic drop cable external to an outside plant optical connection terminal and a network interface device (NID), the NID defining an exterior surface;

wherein the housing is secured on an exterior wall of a subscriber premises between the exterior wall and the exterior surface of the NID and wherein the NID is hingedly affixed to the slack storage receptacle and adapted to rotate upwardly relative to the housing.

24. A slack storage receptacle for storing an excess length of a pre-connectorized fiber optic drop cable comprising:

a housing defining an interior cavity and comprising a storage means disposed within the interior cavity for receiving at least a portion of the fiber optic drop cable external to an outside plant optical connection terminal and a network interface device (NID), the NID defining an exterior surface;

wherein the NID is secured on an exterior wall of a subscriber premises and wherein the slack storage receptacle is positioned around and external to the exterior surface of the NID and adapted to conform to the outer periphery of the NID.

25. A slack storage receptacle for storing an excess length of a pre-connectorized fiber optic drop cable comprising:

a housing defining an interior cavity and comprising a storage means disposed within the interior cavity for receiving at least a portion of the fiber optic drop cable external to an outside plant optical connection terminal and a network interface device (NID), the NID defining an exterior surface;

wherein the NID is secured to an exterior wall of a subscriber premises and wherein the slack storage device is buried under the ground, such that the housing is provided outside the exterior surface of the NID.

26. A slack storage receptacle for storing an excess length of a pre-connectorized fiber optic drop cable extending between an optical connection terminal and a network interface device (NID), the slack storage receptacle comprising:

a housing defining an interior cavity adapted to receive one or more coils of the excess length of the fiber optic drop cable;

wherein the excess length of the fiber optic drop cable is stored external to the NID; and

further comprising a drip loop extending between the housing and the NID and a shield covering the drip loop.

27. A method of deploying a pre-connectorized fiber optic drop cable between an outside plant optical connection terminal and a network interface device (NID), the method comprising:

providing a slack storage receptacle comprising a housing defining an interior cavity and including a storage means disposed within the interior cavity for receiving an excess length of the fiber optic drop cable;

connecting one end of the fiber optic drop cable to the connection terminal;

connecting the other end of the fiber optic drop cable to the NID; and

storing the excess length of the fiber optic drop cable on the storage means of the slack storage receptacle external to the NID.

28. A method according to claim **27**, further comprising securing the housing on an exterior wall of a subscriber premises between the exterior wall and the NID and mounting the NID on the housing.

29. A method according to claim **27**, further comprising securing the housing on an exterior wall of a subscriber premises between the exterior wall and the NID and hingedly affixing the NID to the slack storage receptacle such that the NID is adapted to rotate upwardly relative to the housing.

30. A method according to claim **27**, wherein the slack storage receptacle is adapted to conform to the outer periphery of the NID and further comprising securing the NID on an exterior wall of a subscriber premises and positioning the slack storage receptacle around the NID.

31. A method according to claim **27**, further comprising securing the NID on an exterior wall of a subscriber premises and burying the slack storage receptacle under the ground.

32. A method according to claim **27**, wherein the storage means comprises a hub affixed to the housing and a reel rotatably mounted on the hub and further comprising:

preassembling the slack storage receptacle with the fiber optic drop cable wound on the reel;

shipping the slack storage receptacle including the fiber optic drop cable wound on the reel;

positioning the slack storage receptacle at a location about midway between the connection terminal and the NID; and

paying off the fiber optic drop cable to the connection terminal and the NID by pulling the connectorized ends of the fiber optic drop cable in the same direction and at the same time to unwind the fiber optic drop cable from the reel.

33. A method according to claim **27**, wherein the storage means comprises a hub affixed to the housing and a reel rotatably mounted on the hub and further comprising:

preassembling the slack storage receptacle with the fiber optic drop cable wound on the reel;

shipping the slack storage receptacle including the fiber optic drop cable wound on the reel;

positioning the slack storage receptacle at a location between the connection terminal and the NID adjacent the NID; and

paying off the fiber optic drop cable to the connection terminal and the NID by pulling one of the connectorized ends of the fiber optic drop cable in the direction of the connection terminal to unwind the fiber optic drop cable from the reel and by unwinding the other connectorized end of the fiber optic drop cable off the reel by hand in the direction of the NID.

* * * * *