US007539388B2

(12) **United States Patent**
Mertesdorf et al.

(10) **Patent No.: US 7,539,388 B2**
(45) **Date of Patent: *May 26, 2009**

(54) **FIBER ACCESS TERMINAL**

(75) Inventors: **Daniel Ray Mertesdorf**, Nicollet, MN (US); **Trevor D. Smith**, Eden Prairie, MN (US); **Keith Nelson**, Brooklyn Center, MN (US); **Erik Gronvall**, Eagan, MN (US); **Paula Rudenick**, Eden Prairie, MN (US); **Matthew D. Ferris**, Carver, MN (US)

(73) Assignee: **ADC Telecommunications, Inc.**, Eden Prairie, MN (US)

(*) Notice: Subject to any disclaimer, the term of this patent is extended or adjusted under 35 U.S.C. 154(b) by 0 days.

This patent is subject to a terminal disclaimer.

(21) Appl. No.: **12/145,974**

(22) Filed: **Jun. 25, 2008**

(65) **Prior Publication Data**

US 2008/0260345 A1 Oct. 23, 2008

Related U.S. Application Data

(63) Continuation of application No. 12/028,465, filed on Feb. 8, 2008, now Pat. No. 7,400,815, which is a continuation of application No. 11/708,119, filed on Feb. 15, 2007, now Pat. No. 7,397,997, which is a continuation of application No. 11/075,847, filed on Mar. 8, 2005, now Pat. No. 7,292,763.

(60) Provisional application No. 60/551,164, filed on Mar. 8, 2004, provisional application No. 60/600,129, filed on Aug. 9, 2004.

(51) **Int. Cl.**
G02B 6/00 (2006.01)

(52) **U.S. Cl.** **385/135**

(58) **Field of Classification Search** ..... None
See application file for complete search history.

(56) **References Cited**

U.S. PATENT DOCUMENTS

4,478,486 A 10/1984 Fentress et al.

(Continued)

FOREIGN PATENT DOCUMENTS

EP 0 511 147 A1 10/1992

(Continued)

OTHER PUBLICATIONS

ADC Telecommunications; FL2000 Products; 6 pages; Nov. 1996.

(Continued)

Primary Examiner—Sung H Pak
(74) *Attorney, Agent, or Firm*—Merchant & Gould P.C.

(57) **ABSTRACT**

A fiber access terminal for mounting to the end of a fiber distribution cable and configured to be extended through a buried conduit. The fiber distribution cable may include a plurality of optical fibers and enters a housing of the terminal through a base. The terminal also includes a plurality of fiber optic connectors or adapters extending through the housing in generally the same direction as the fiber distribution cable for connecting to optical fiber customer drop cables. The terminal includes a cover and the housing defining an interior and the interior includes a cable slack storage arrangement providing bend radius protection for the optical fiber cables within the interior. A method of assembling a fiber access terminal. A fiber access terminal assembly including a pedestal mounting arrangement.

35 Claims, 81 Drawing Sheets

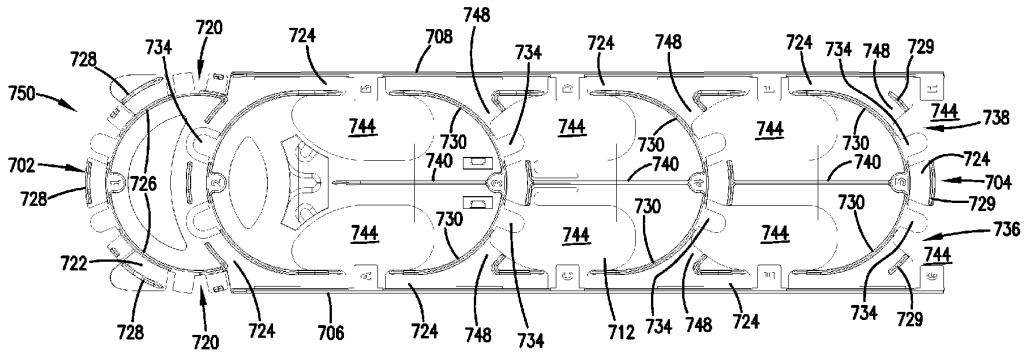

U.S. PATENT DOCUMENTS

4,648,168	A	3/1987	Nolf et al.
4,685,764	A	8/1987	Hoffer et al.
4,717,231	A	1/1988	Dewez et al.
4,744,622	A	5/1988	Cherry et al.
4,761,052	A	8/1988	Buekers et al.
4,805,979	A	2/1989	Bossard et al.
4,908,482	A	3/1990	Shimirak et al.
4,913,522	A	4/1990	Noff et al.
5,029,958	A	7/1991	Hodge et al.
5,046,811	A	9/1991	Jung et al.
5,048,916	A	9/1991	Caron
5,097,529	A	3/1992	Cobb et al.
5,097,530	A	3/1992	Holt et al.
5,122,069	A	6/1992	Brownlie et al.
5,133,038	A	7/1992	Zipper
5,155,794	A	10/1992	Nolf et al.
5,185,845	A	2/1993	Jones
5,208,893	A	5/1993	McCall et al.
5,222,183	A	6/1993	Daems et al.
5,231,687	A	7/1993	Handley
5,235,665	A	8/1993	Marchesi et al.
5,249,253	A	9/1993	Franckx et al.
5,267,122	A	11/1993	Glover et al.
5,323,480	A	6/1994	Mullaney et al.
5,396,575	A	3/1995	Hayward et al.
5,446,823	A	8/1995	Bingham et al.
5,479,533	A	12/1995	Tanaka
5,479,553	A	12/1995	Daems et al.
5,509,099	A	4/1996	Hermsen et al.
5,515,472	A	5/1996	Mullaney et al.
5,525,756	A	6/1996	Mullaney et al.
5,535,298	A	7/1996	Fasnacht et al.
D372,897	S	8/1996	Curry et al.
5,546,495	A	8/1996	Bruckner et al.
5,556,060	A	9/1996	Bingham et al.
5,566,268	A	10/1996	Radliff et al.
5,566,269	A	10/1996	Eberle, Jr. et al.
5,577,151	A	11/1996	Hoffer
5,602,954	A	2/1997	Nolf et al.
5,613,030	A	3/1997	Hoffer et al.
5,633,973	A	5/1997	Vincent et al.
5,640,482	A	6/1997	Barry et al.
5,659,650	A	8/1997	Arnett
5,661,841	A	8/1997	Van Noten
5,689,607	A	11/1997	Vincent et al.
5,692,299	A	12/1997	Daems et al.
5,732,180	A	3/1998	Kaplan
5,745,633	A	4/1998	Giebel et al.
5,754,723	A	5/1998	Fremgen
5,758,004	A	5/1998	Alarcon et al.
5,764,843	A	6/1998	Macken et al.
5,764,844	A	6/1998	Mendes
5,777,268	A	7/1998	Allen et al.
5,781,678	A	7/1998	Sano et al.
5,825,960	A	10/1998	Woodward et al.
5,828,807	A	10/1998	Tucker et al.
5,886,300	A	3/1999	Strickler
5,892,870	A	4/1999	Fingler et al.
5,907,653	A	5/1999	Burek et al.
5,911,027	A	6/1999	Macken et al.
5,917,648	A	6/1999	Harker
5,933,563	A	8/1999	Schaffer et al.
5,982,971	A	11/1999	Amirkalali
RE36,592	E	2/2000	Giebel et al.
6,160,946	A	12/2000	Thompson et al.
6,167,183	A	12/2000	Swain
6,175,079	B1	1/2001	Johnston et al.
6,208,796	B1	3/2001	Williams Vigliaturo
6,215,939	B1	4/2001	Cloud
6,250,816	B1	6/2001	Johnston et al.
6,259,024	B1	7/2001	Daoud
6,263,142	B1	7/2001	Mardirossian et al.
6,275,639	B1	8/2001	Bolt et al.
6,275,640	B1	8/2001	Hunsinger et al.
6,292,614	B1	9/2001	Smith et al.
6,300,562	B1	10/2001	Daoud
6,363,200	B1	3/2002	Thompson et al.
6,396,989	B1	5/2002	Johnston et al.
6,424,782	B1	7/2002	Ray
6,439,779	B1	8/2002	Hafer
6,453,106	B1	9/2002	Glaser et al.
6,504,986	B1	1/2003	Wambeke et al.
6,504,987	B1	1/2003	Macken et al.
6,507,691	B1	1/2003	Hunsinger et al.
6,535,682	B1	3/2003	Puetz et al.
6,621,975	B2	9/2003	Laporte et al.
6,661,961	B1	12/2003	Allen et al.
6,728,451	B2	4/2004	Kordahi
6,760,531	B1	7/2004	Solheid et al.
6,763,170	B2	7/2004	Kordahi et al.
6,788,846	B2	9/2004	Hileman et al.
6,880,986	B2	4/2005	Mynatt et al.
6,926,449	B1	8/2005	Keenum et al.
7,013,074	B2	3/2006	Battey et al.
7,072,559	B2	7/2006	Giordano et al.
7,120,347	B2	10/2006	Blackwell, Jr. et al.
7,142,764	B2	11/2006	Allen
7,292,763	B2	11/2007	Smith et al.
7,298,952	B2	11/2007	Allen
7,333,708	B2	2/2008	Blackwell, Jr. et al.
7,340,145	B2	3/2008	Allen
7,397,997	B2	7/2008	Ferris et al.
2003/0077041	A1	4/2003	Belaidi et al.
2003/0103750	A1	6/2003	Laporte et al.
2004/0028368	A1	2/2004	Hileman et al.
2004/0062508	A1	4/2004	Blankenship et al.
2004/0211774	A1	10/2004	Daoud et al.
2005/0094959	A1	5/2005	Sibley et al.
2005/0129375	A1	6/2005	Elkins, II et al.
2005/0145522	A1	7/2005	Bloodworth et al.
2005/0163448	A1	7/2005	Blackwell, Jr. et al.
2005/0175307	A1	8/2005	Battey et al.
2005/0175308	A1	8/2005	Elkins, II et al.
2005/0185895	A1	8/2005	Keenum et al.
2005/0220421	A1	10/2005	Keenum et al.
2006/0093303	A1	5/2006	Reagan et al.
2006/0098932	A1	5/2006	Battey et al.
2006/0285810	A1	12/2006	Vanhentenrijk et al.
2007/0104448	A1	5/2007	Allen
2007/0189694	A1	8/2007	Mullaney et al.
2008/0131068	A1	6/2008	Mertesdorf et al.

FOREIGN PATENT DOCUMENTS

EP	0 805 536	A1	11/1997
EP	0 844 504	A2	5/1998
FR	2 853 775	A1	10/2004
WO	WO 95/07478		3/1995
WO	WO 02/06879	A1	1/2002

OTHER PUBLICATIONS

ADC Telecommunications; Fiber Panel Products Second Edition; 16 pages; Jul. 1996.

ADC Telecommunications; Fiber Cable Management Products Third Edition; 22 pages; Jun. 1998.

ADC Telecommunications; Value-Added Module System; 8 pages; Jun. 1998.

ADC Telecommunications; FL2000™ Wall Mount Box Installation Instructions; 18 pages; ADCP-90-210 Issue 4; Jan. 1998.

ADC Telecommunications; FTUA 4- and 12-Fiber Wall Box User Manual; 14 pages; ADCP-90-249 Issue 2, Mar. 1997.

ADC Telecommunications; Wall Mount Box Dec. 24, 1936 Fiber User Manual; 16 pages; ADCP-90-149 Issue 3, Jul. 1997.

ADC Telecommunications; FL1000 Wall-Mount Box Installation and Operation Guide; 28 pages; ADCP-90-334 Issue 1, Nov. 2004.
ADC Telecommunications; FTD1 36-Fiber Wall Box User Manual; 15 pages; ADCP-90-250 Issue 1, Nov. 1996.
ADC Telecommunications; Six-Fiber In-Building Wall Box Installation Instructions; 8 pages; ADCP-90-167 Issue 3, Nov. 1997.
Complaint relating to Civil Action No. 08-CV-05222-RHK-JJK, filed Sep. 19, 2008.

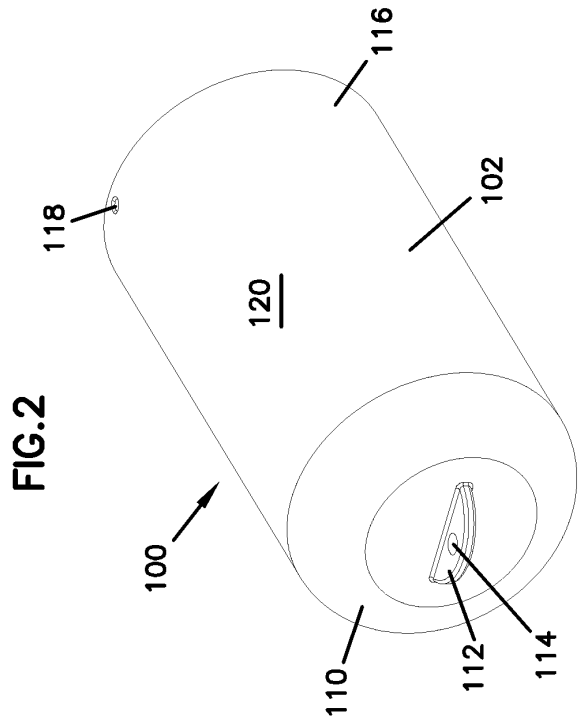
100
110
112
114
118
120
116
102

FIG.2

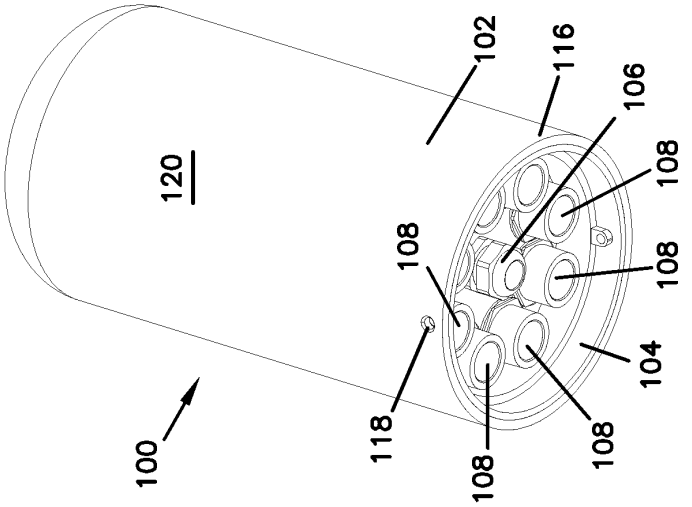
100
118
108
108
108
108
108
104
120
102
116
106

FIG.1

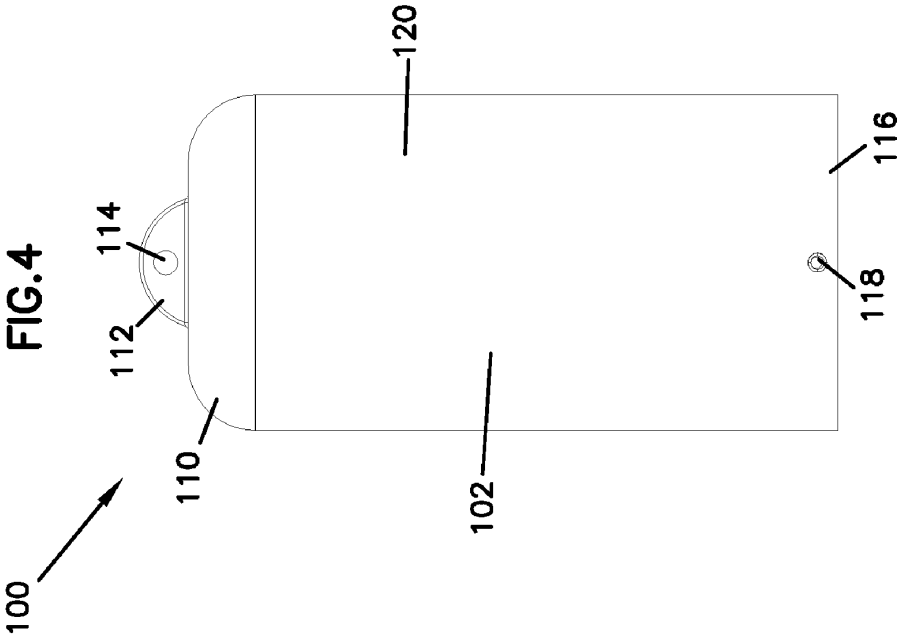

FIG.4

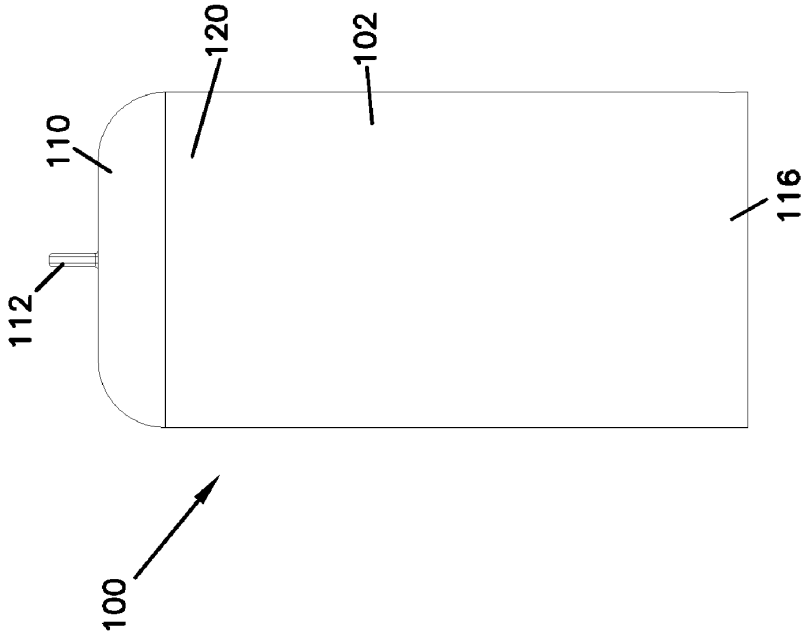

FIG.3

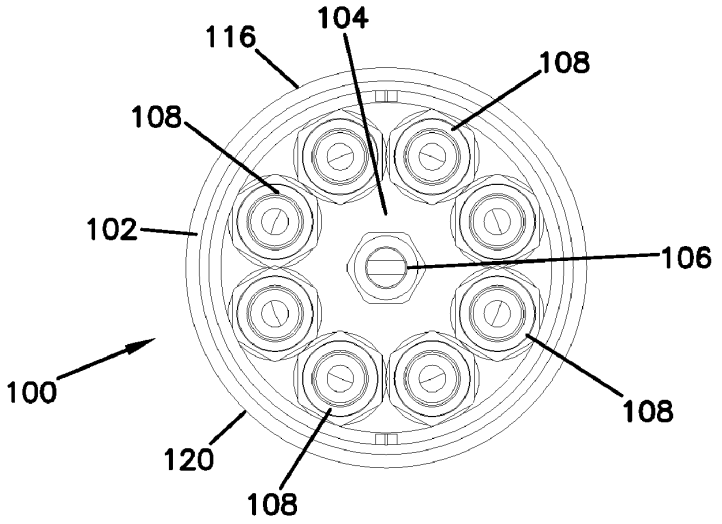

FIG.6

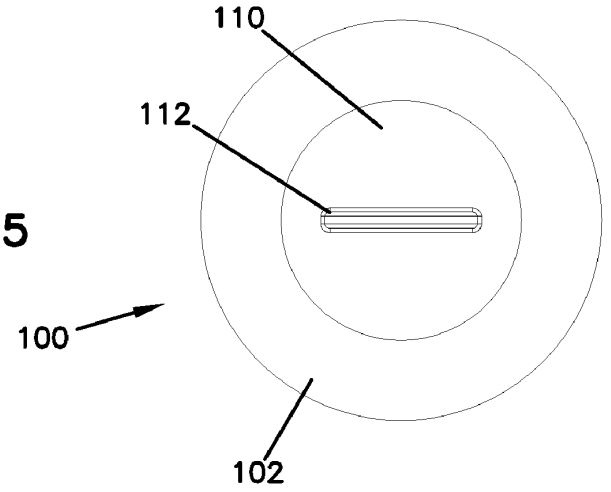

FIG.5

FIG.9

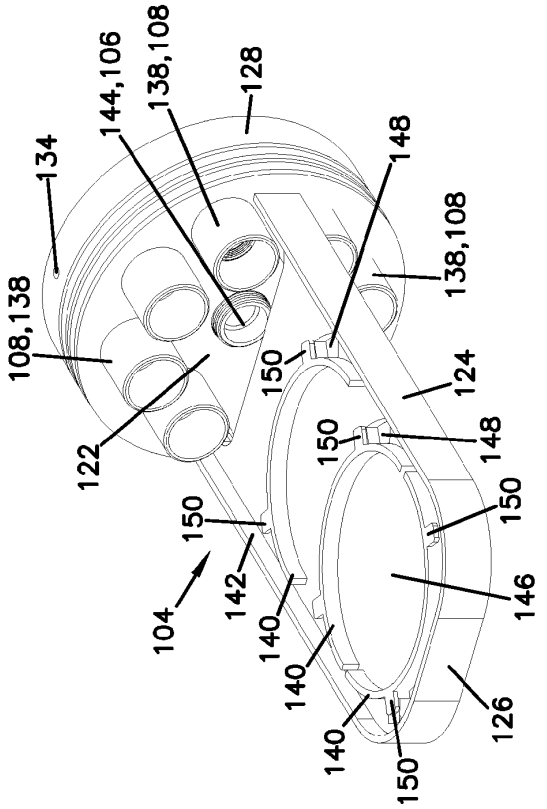
108,138
134
144,106
138,108
128
148
138,108
122
150
124
150
148
150
104
142
140
146
140
126
140
150

FIG.7

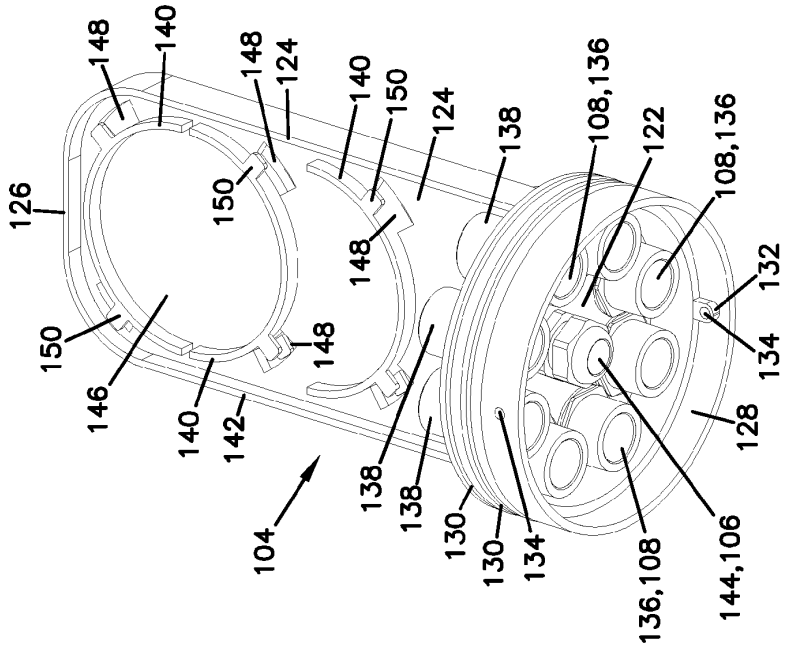
126
148
140
148
124
140
150
124
138
108,136
122
108,136
150
150
148
132
134
146
148
140
142
128
104
138
138
130
130
134
136,108
144,106

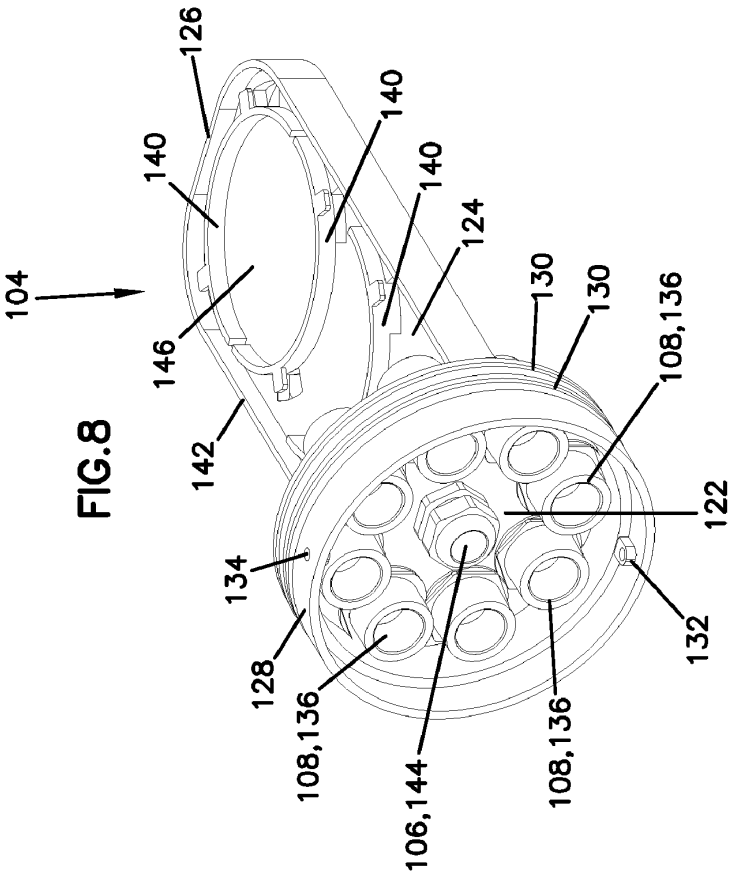
104
126
140
140
140
146
142
124
130
130
108,136
122
134
128
108,136
106,144
108,136
132

FIG.8

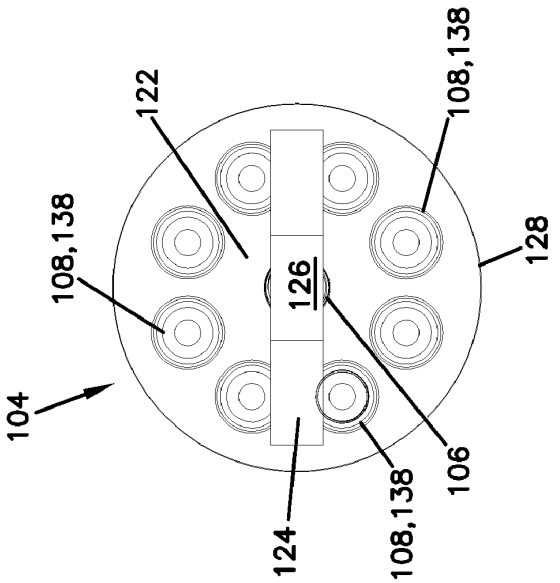
104
108,138
122
126
108,138
128
124
108,138
106

FIG.12

FIG.11

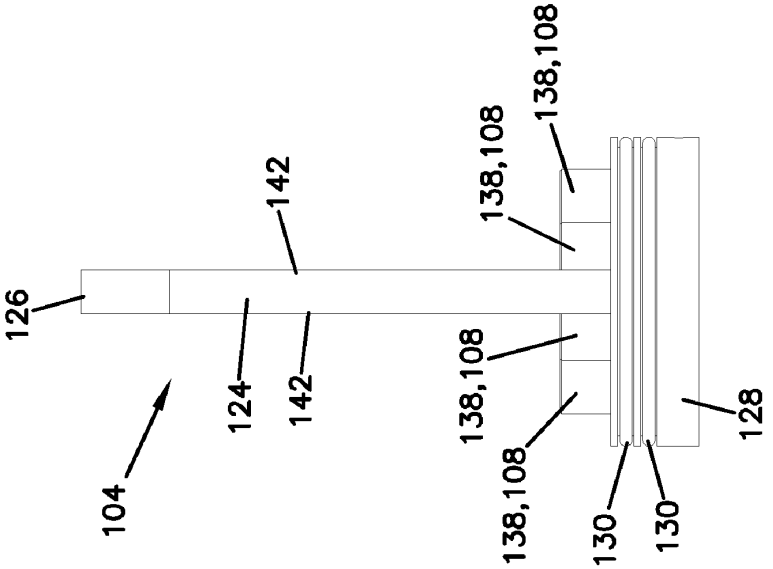
126
104
124
142
142
138,108
138,108
138,108
138,108
130
130
128

FIG.10

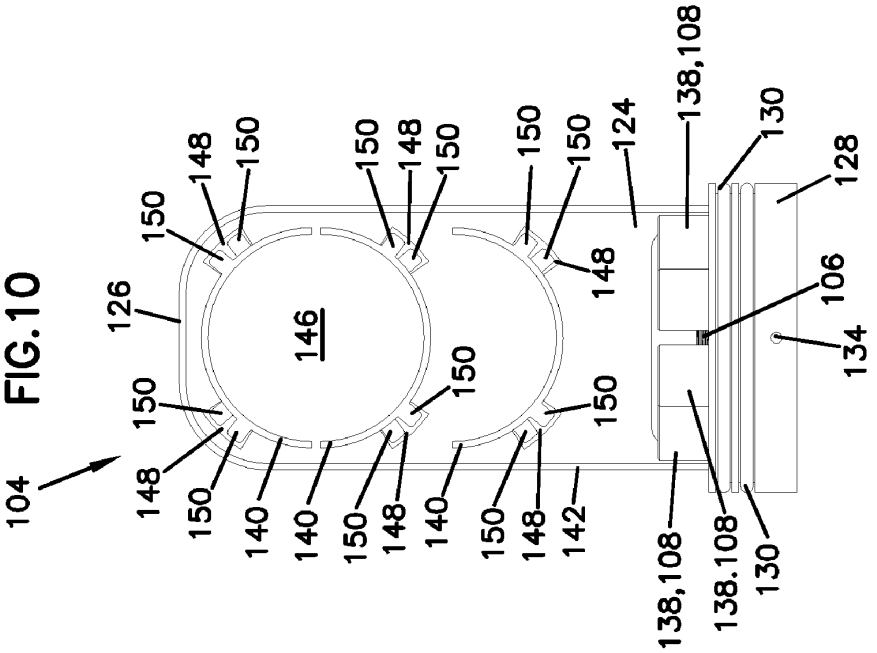
104
126
146
148
150
140
142
124
138,108
130
128
106
134
138.108

FIG.13

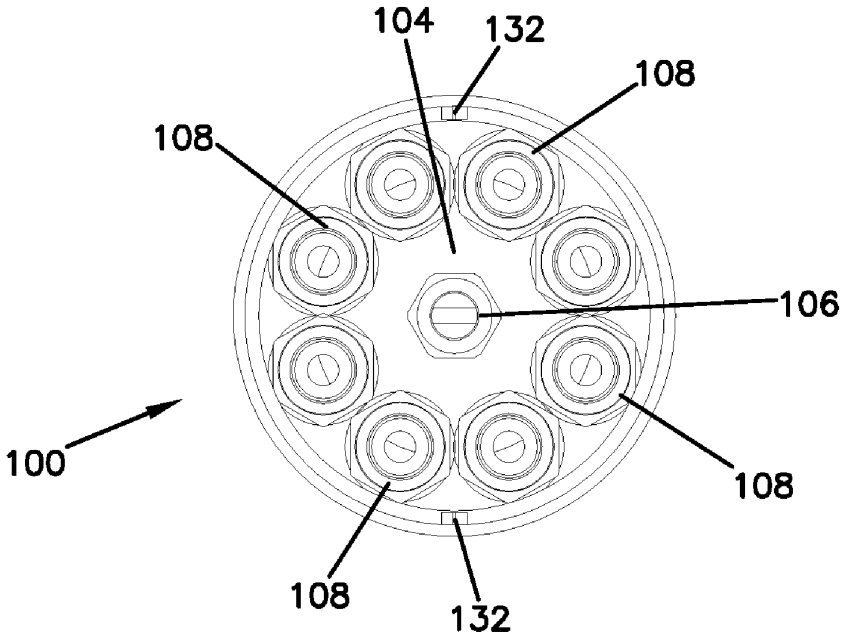

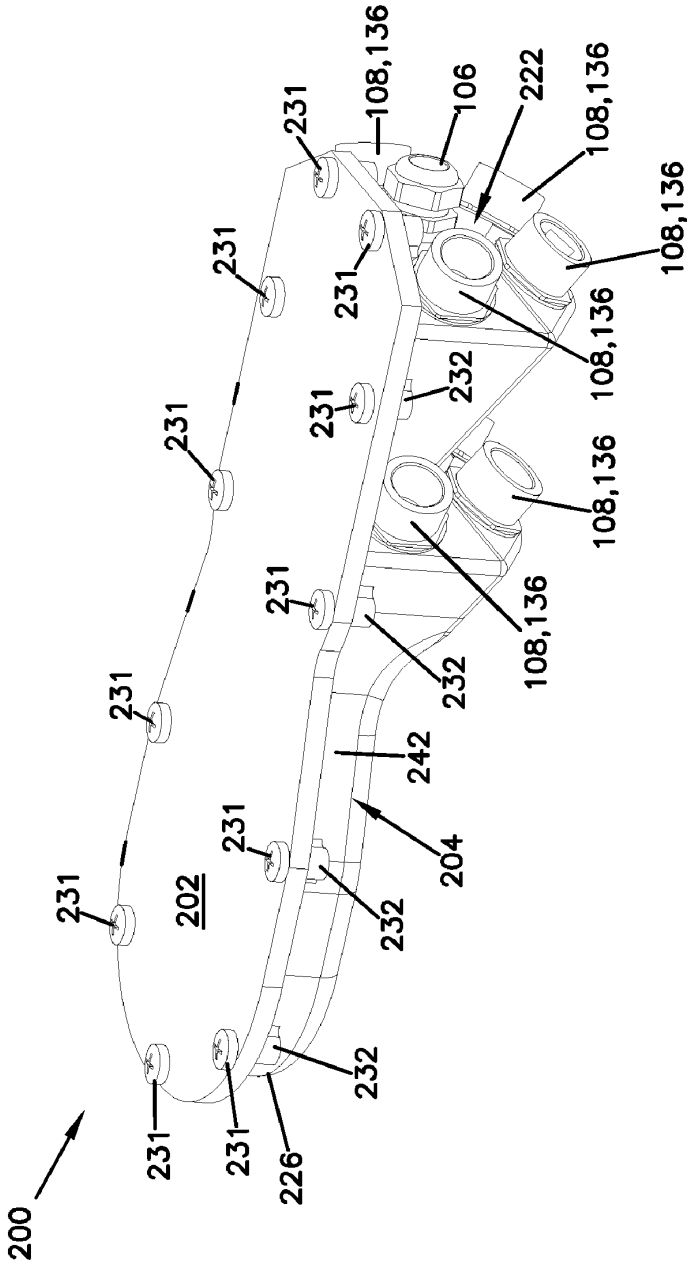
200
231
231
231
231
231
231
231
231
231
231
231
231
202
226
232
232
232
232
204
242
108,136
108,136
108,136
108,136
108,136
108,136
106
222

FIG.14

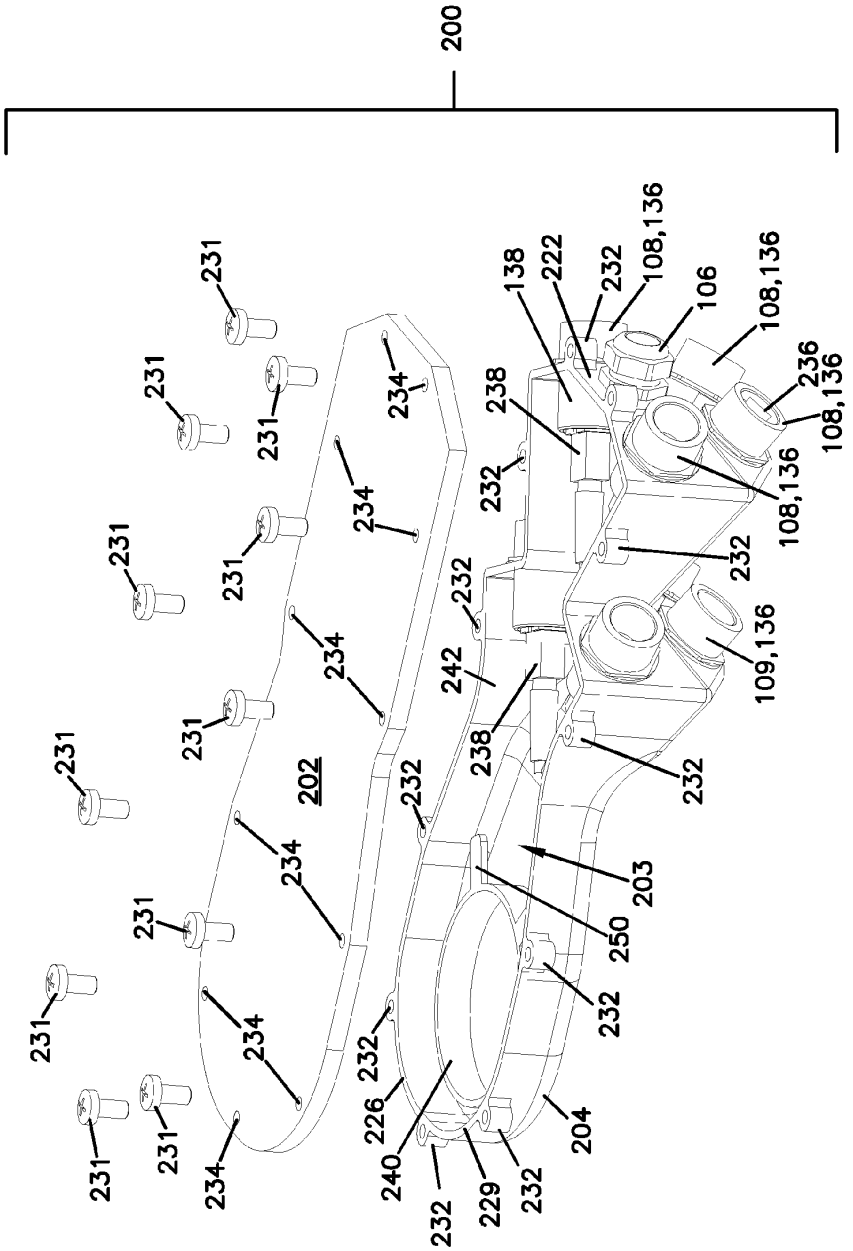
200
231
234
202
138
222
232
108,136
106
236
238
242
109,136
203
250
226
240
229
204

FIG.15

FIG.16

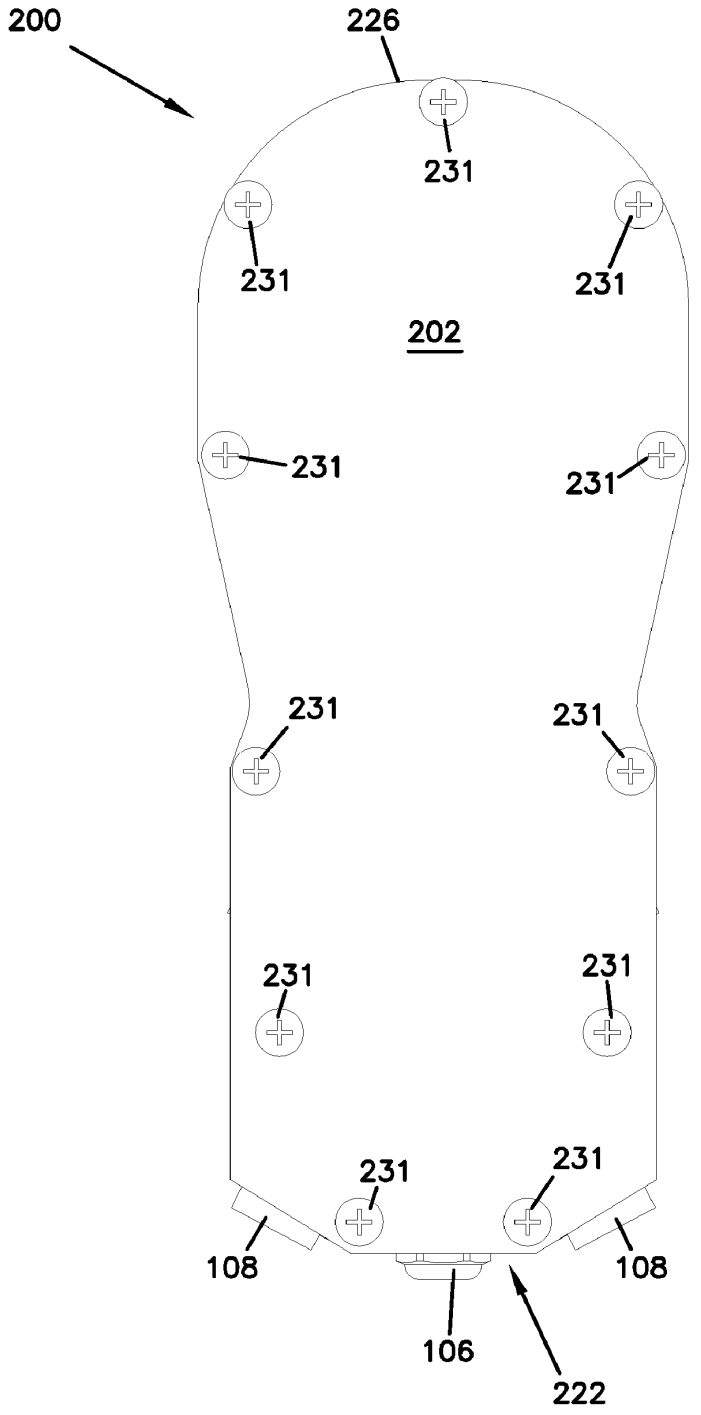
200
226
231
231
231
202
231
231
231
231
231
231
231
231
108
108
106
222

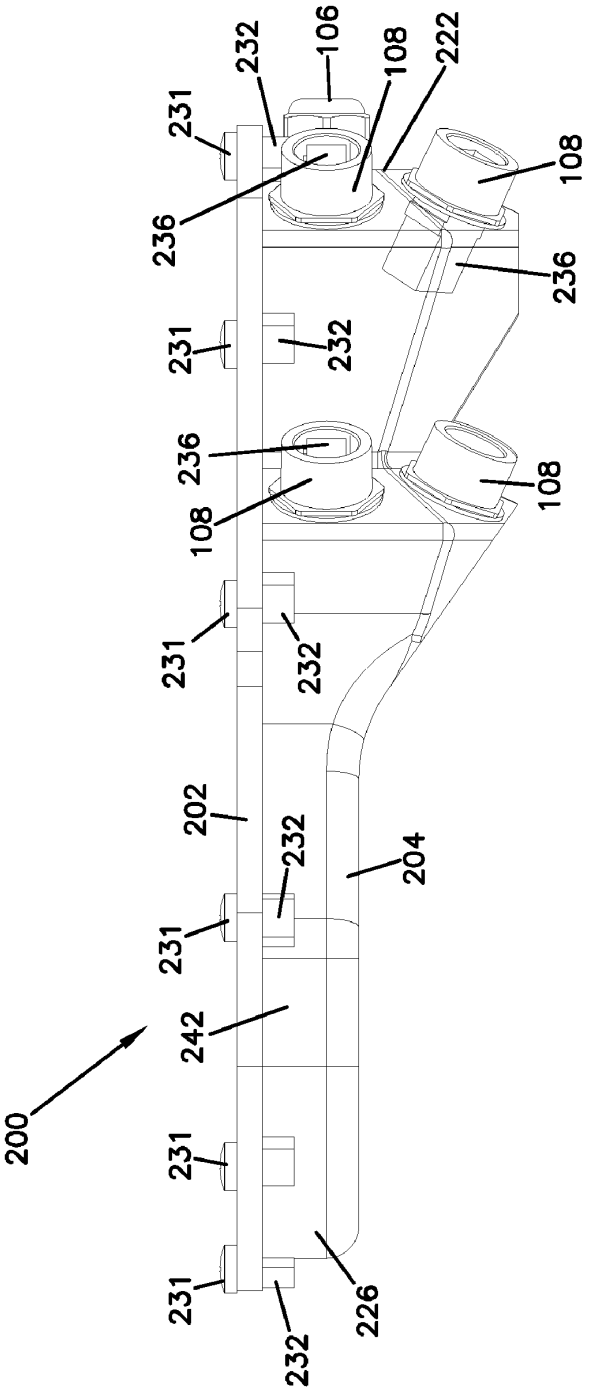
106
108
222
232
231
236
108
236
231
232
236
108
108
231
232
202
232
204
231
242
200
231
231
226
232

FIG.17

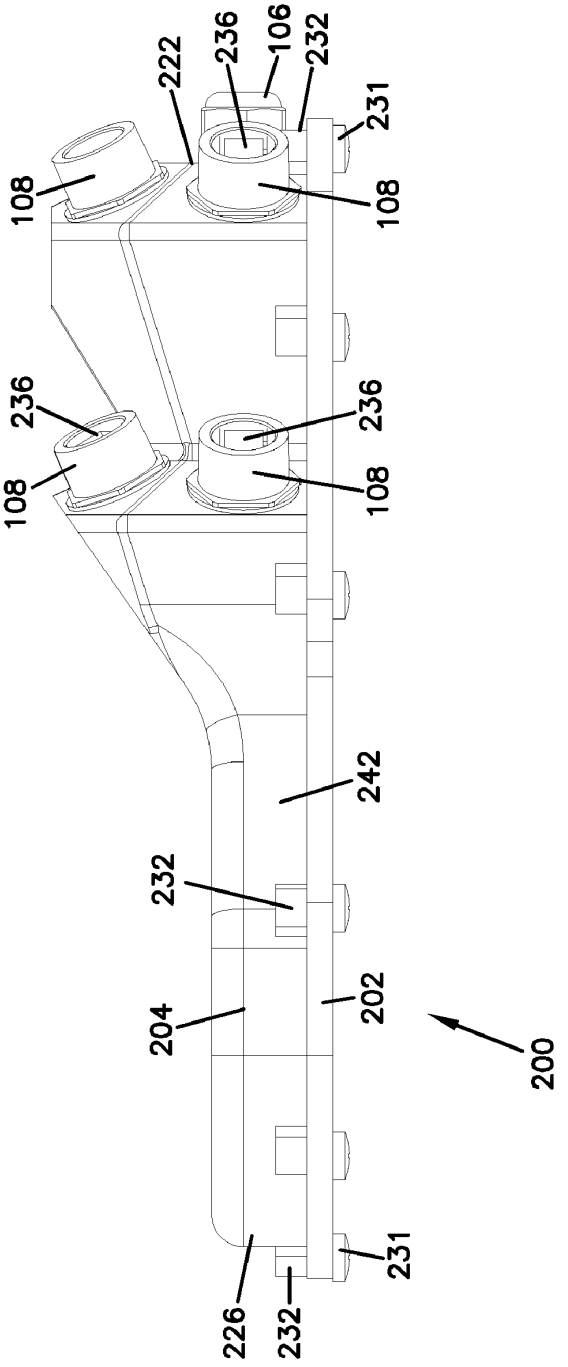
222
236
106
232
231
108
108
236
236
108
108
242
232
204
202
200
231
226
232

FIG.18

FIG.20

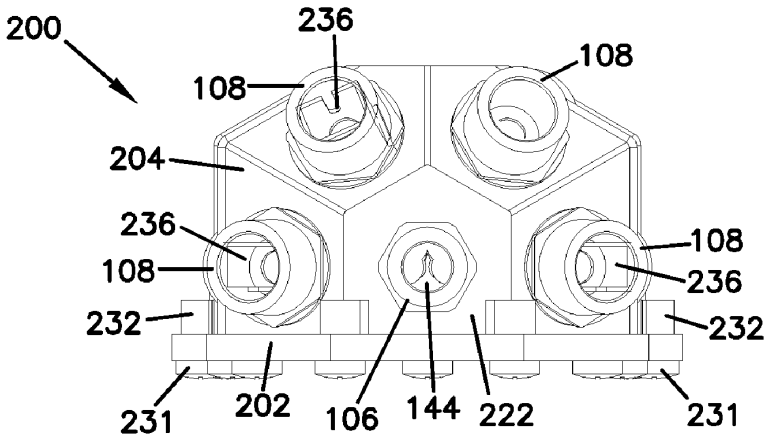
200
236
108
108
204
236
108
108
236
232
232
231
202
106
144
222
231

FIG.19

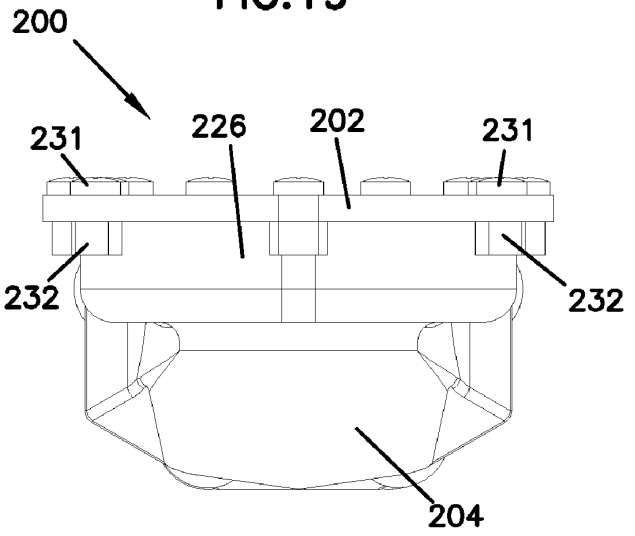
200
231
226
202
231
232
232
204

FIG.21

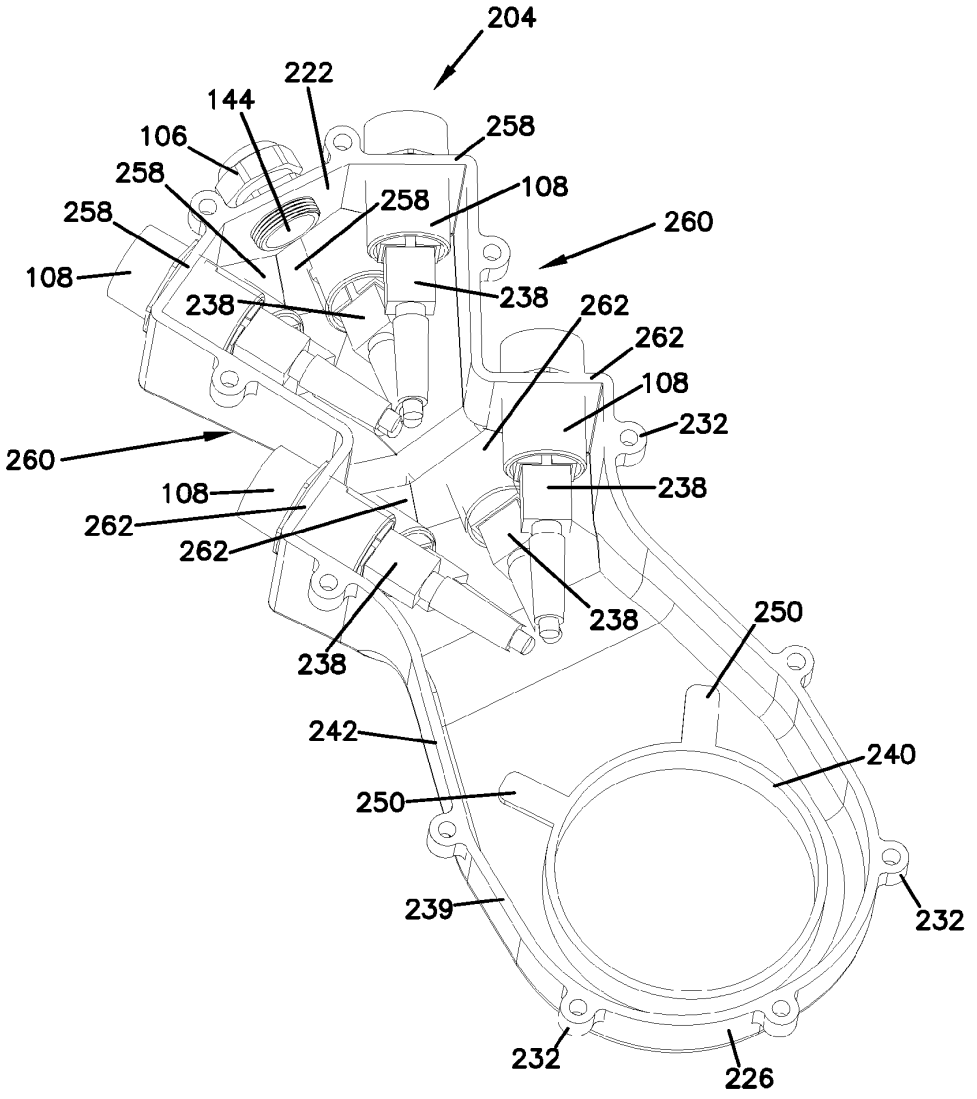
204
222
144
106
258
258
258
258
108
260
108
238
238
262
262
108
232
260
108
238
262
262
238
238
250
242
240
250
239
232
232
226

FIG.22

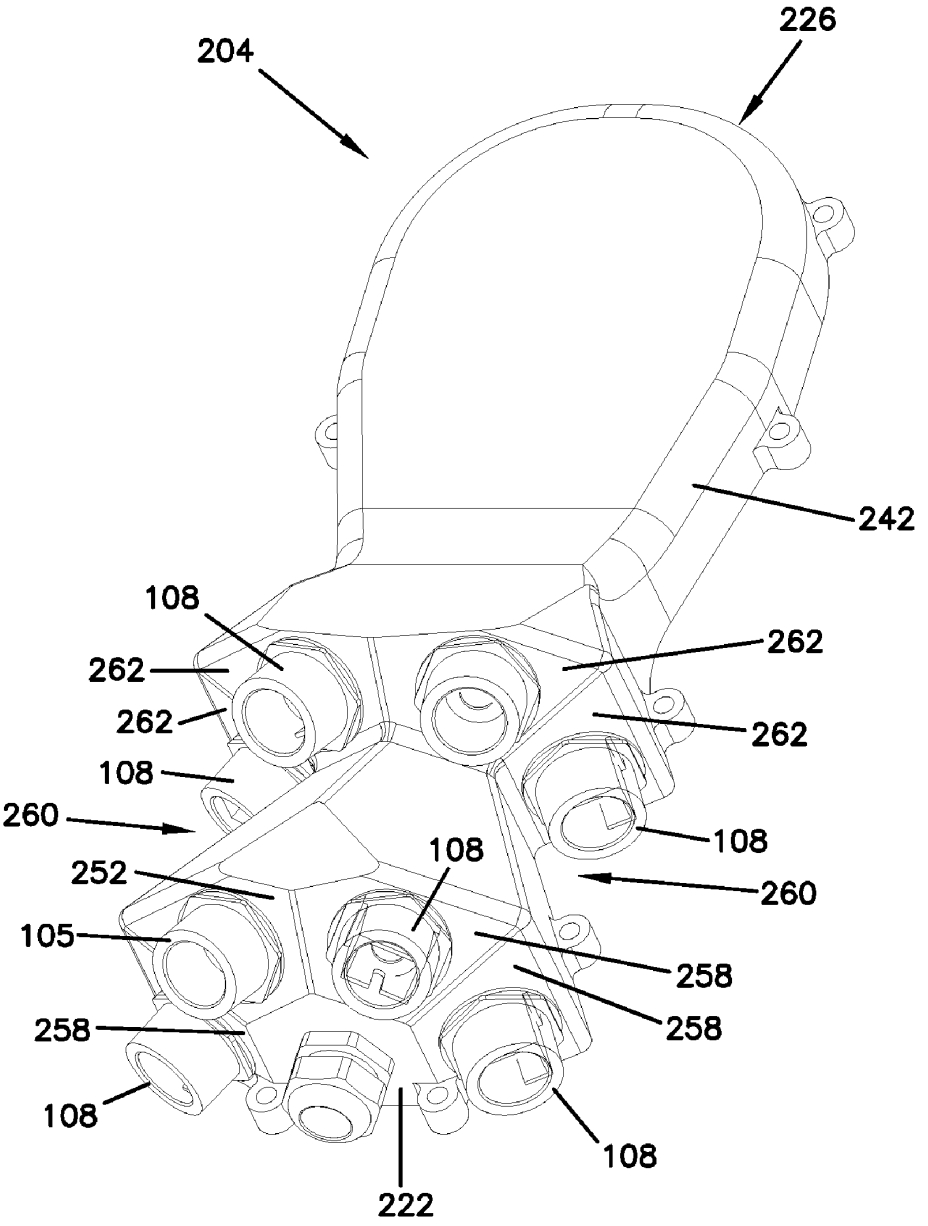
226
204
242
108
262
262
262
262
108
260
108
108
252
260
105
258
258
258
108
108
222

FIG.23

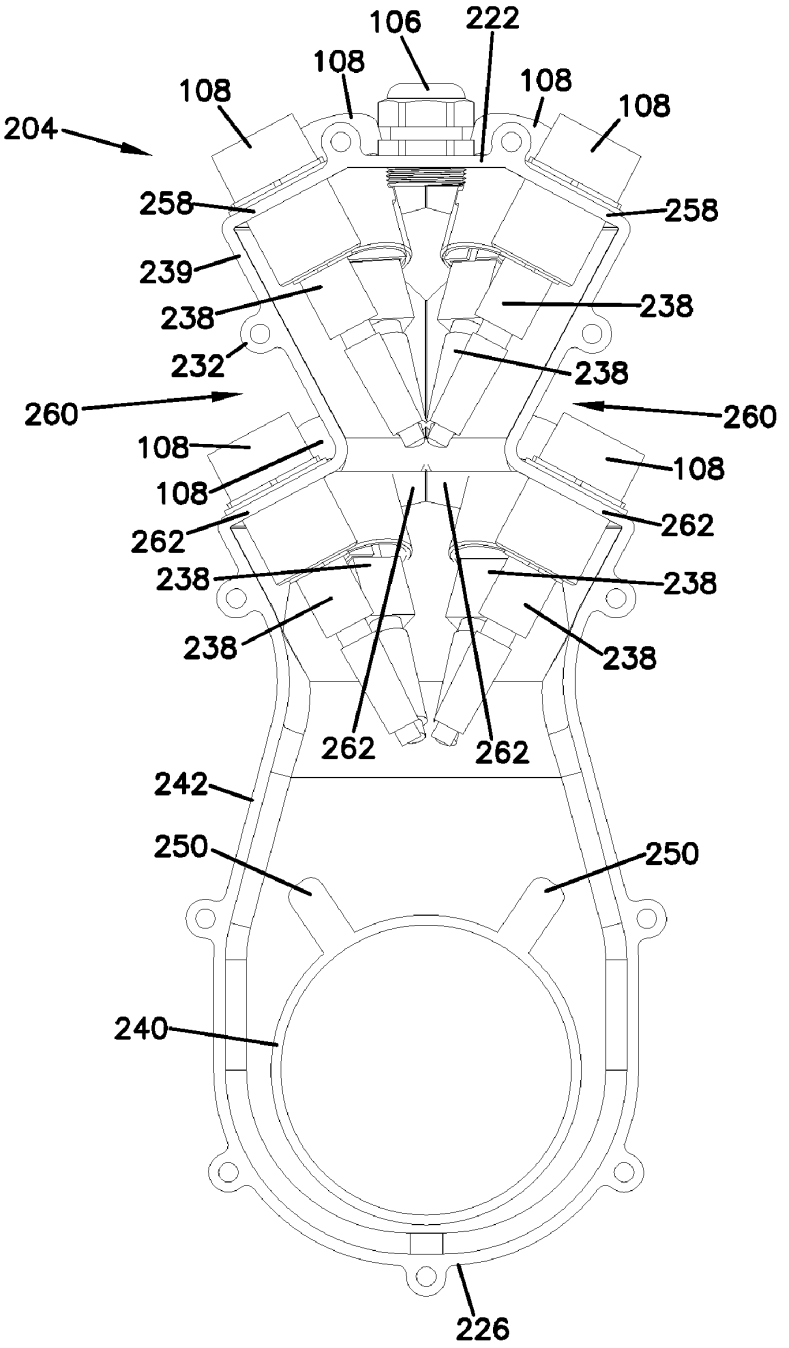
106
222
108
108
108
108
204
258
258
239
238
238
232
238
260
260
108
108
108
262
262
238
238
238
238
262
262
242
250
250
240
226

FIG.24

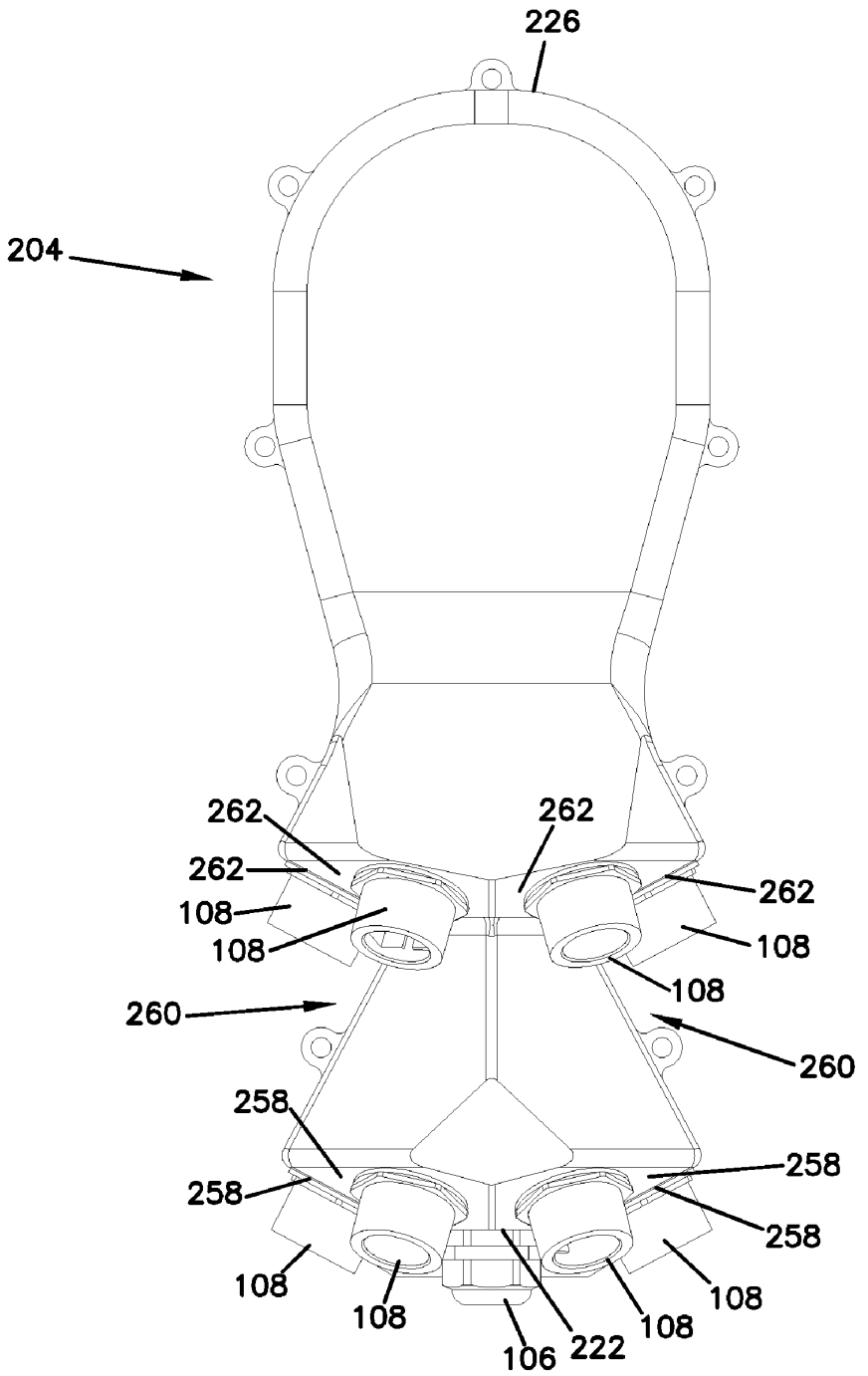
226
204
262
262
262
262
108
108
108
108
260
260
258
258
258
258
108
108
108
108
106
222

FIG.25

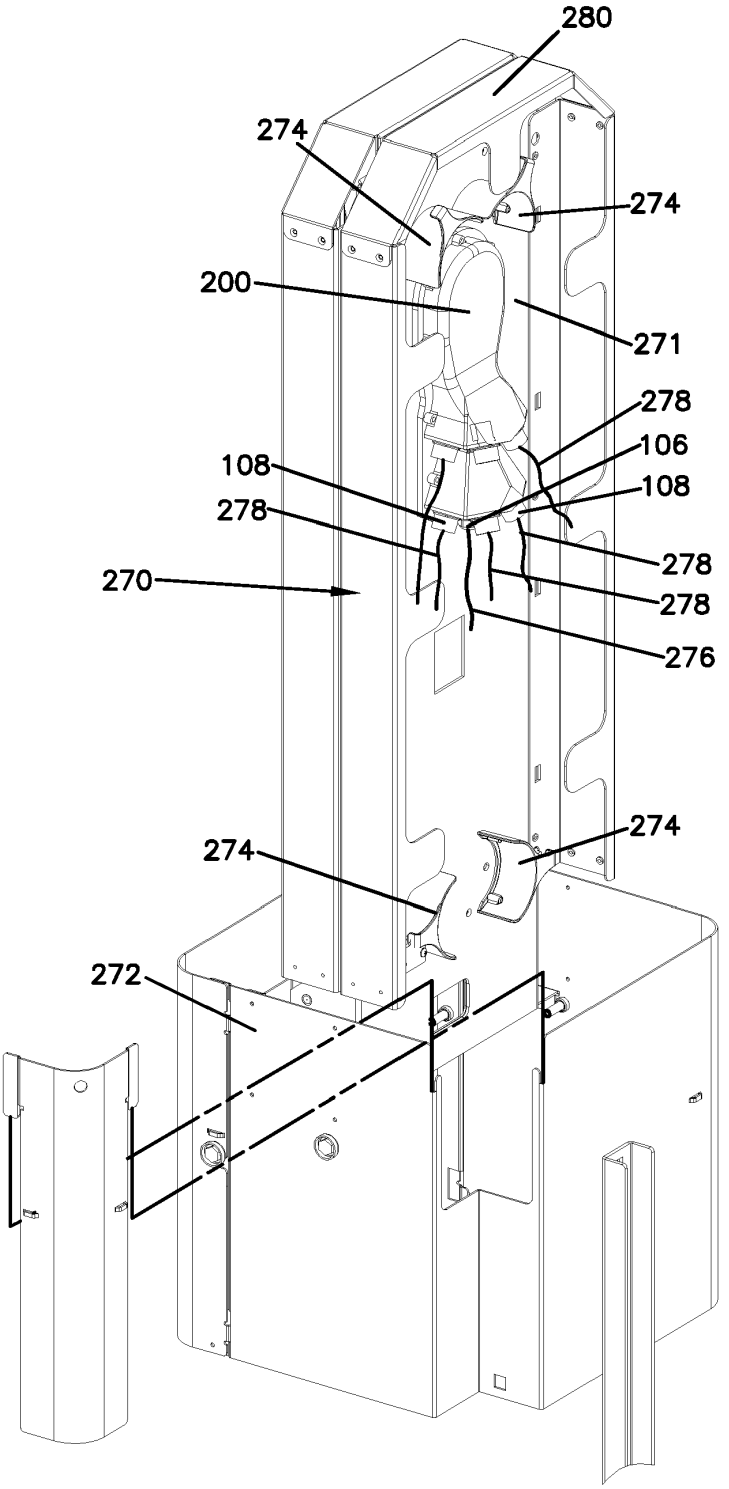
280
274
274
200
271
278
106
108
108
278
278
270
278
276
274
274
272

FIG.26

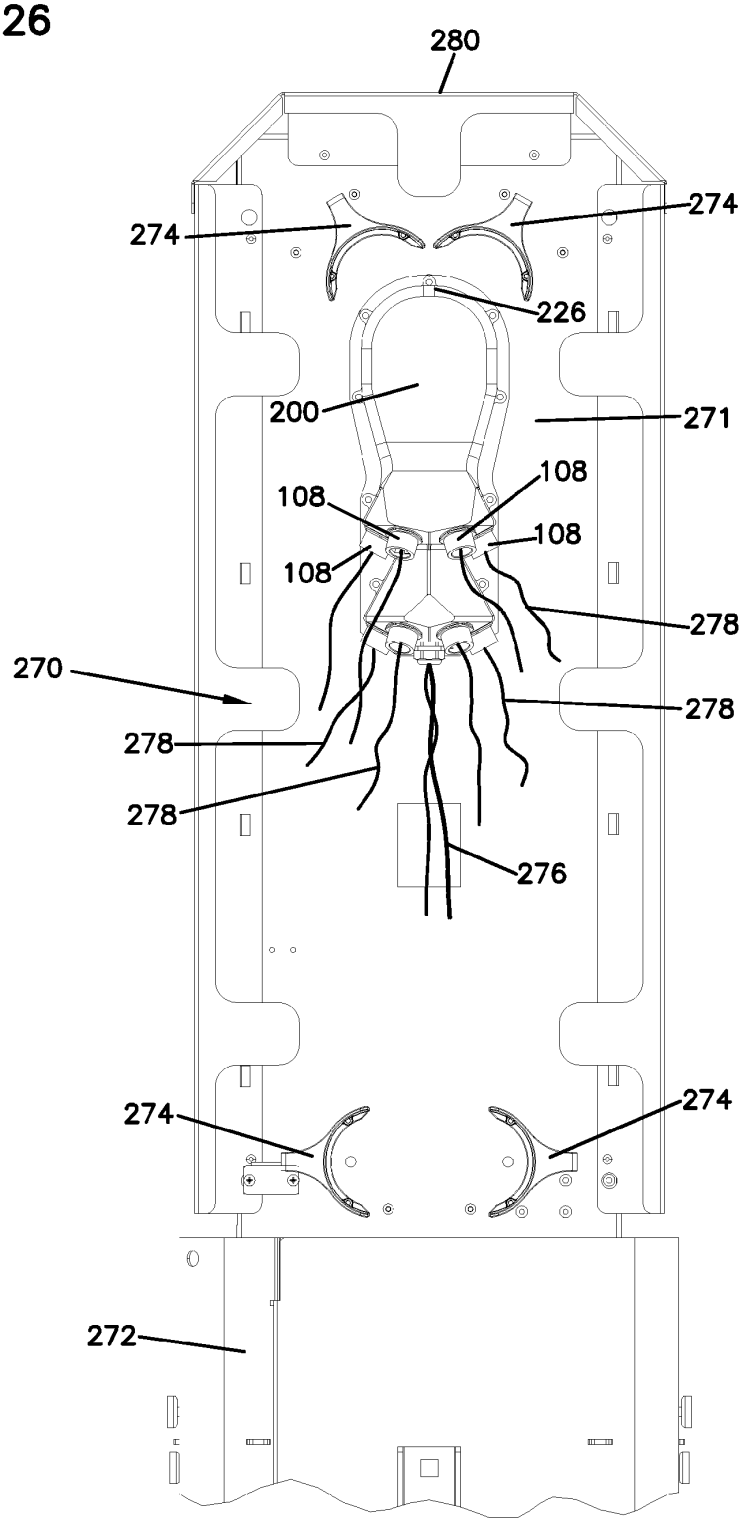
280
274
274
226
200
271
108
108
108
108
278
270
278
278
278
276
274
274
272

FIG.27

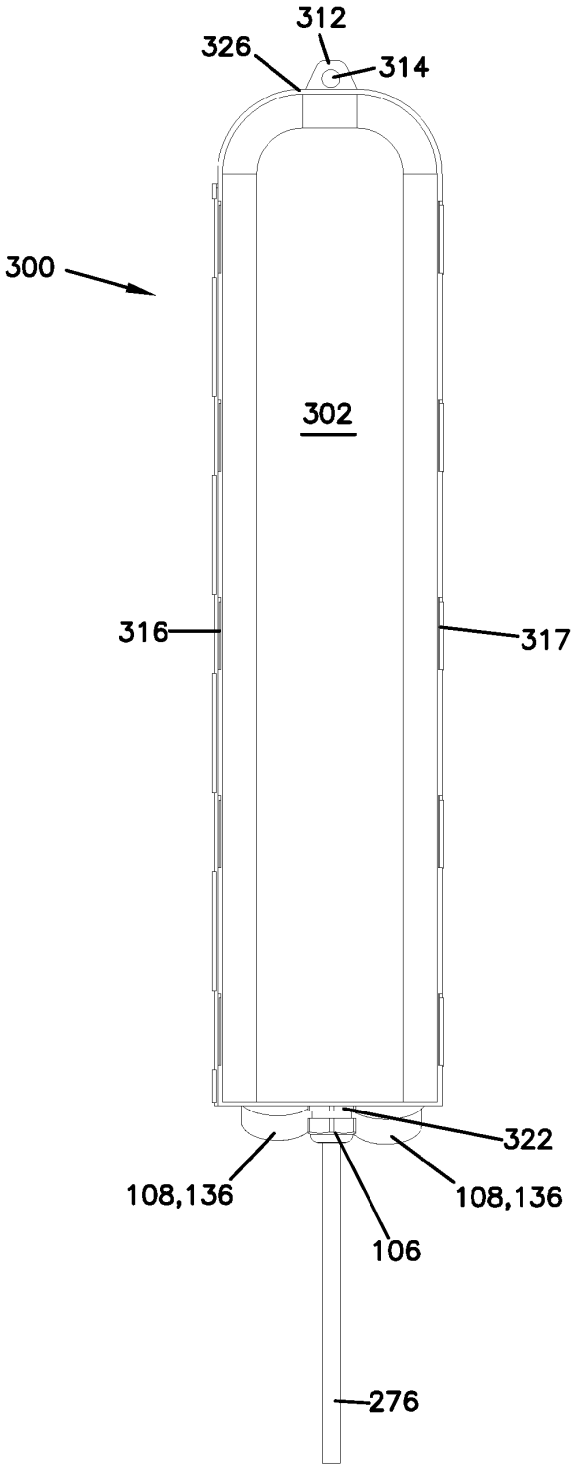

FIG.28

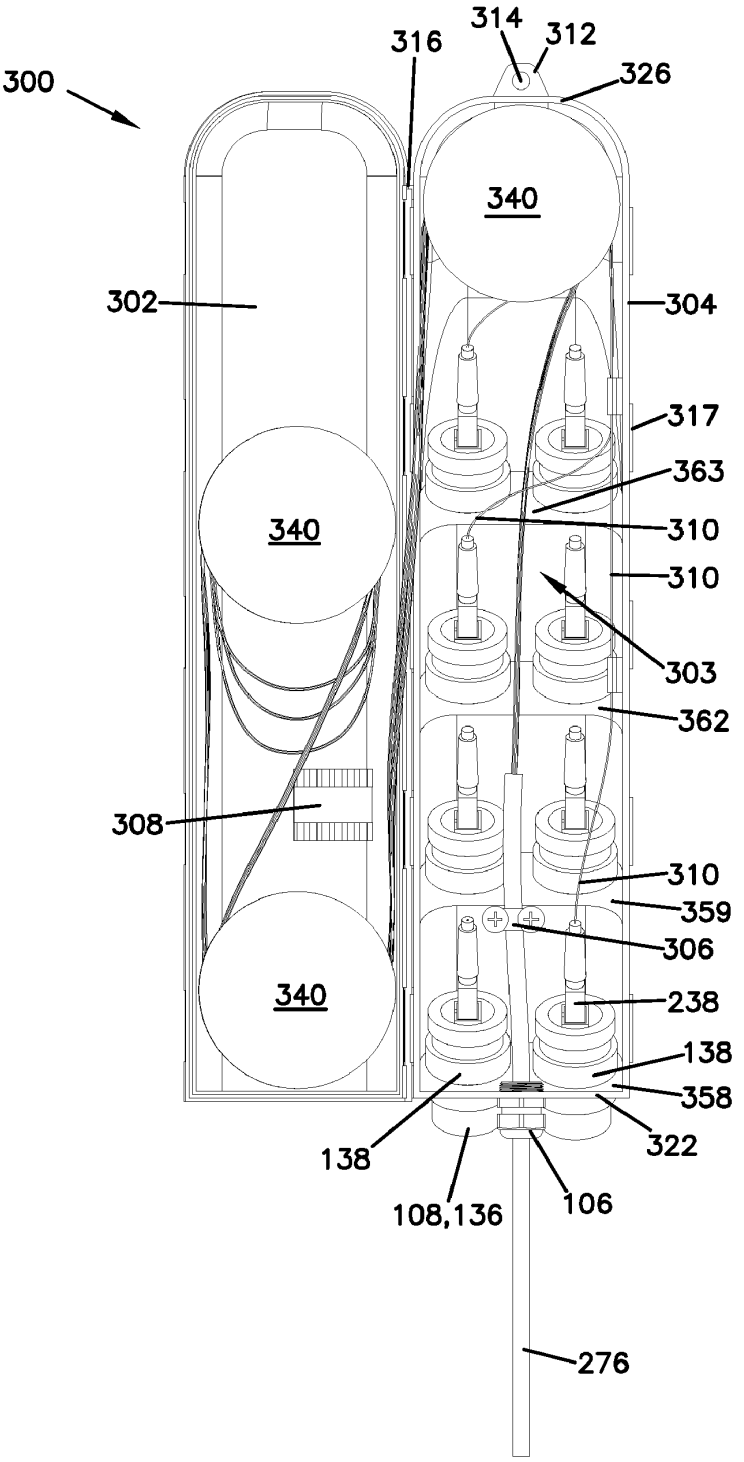
300
316
314
312
326
340
302
304
317
363
340
310
310
303
362
308
310
359
306
340
238
138
358
138
322
108,136
106
276

FIG.29

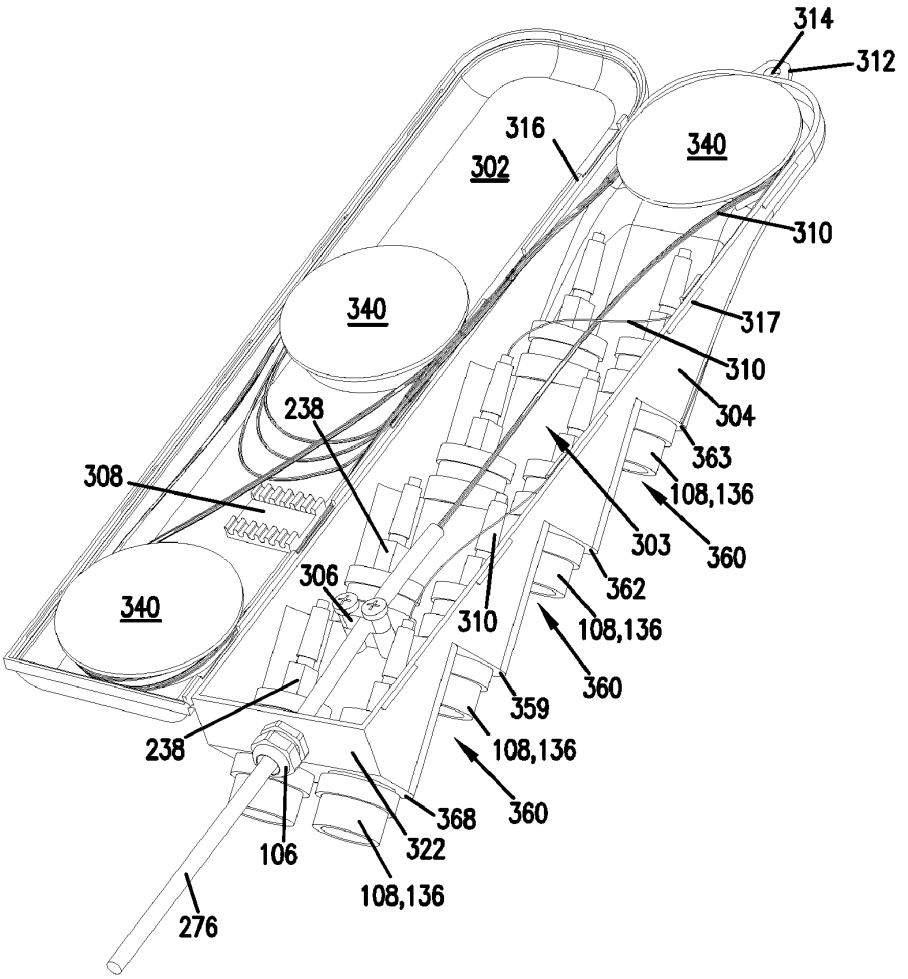
314
312
316
302
340
310
340
317
310
304
238
363
308
108,136
303
360
306
362
340
310
108,136
360
359
238
108,136
368
360
106
322
108,136
276

FIG.30

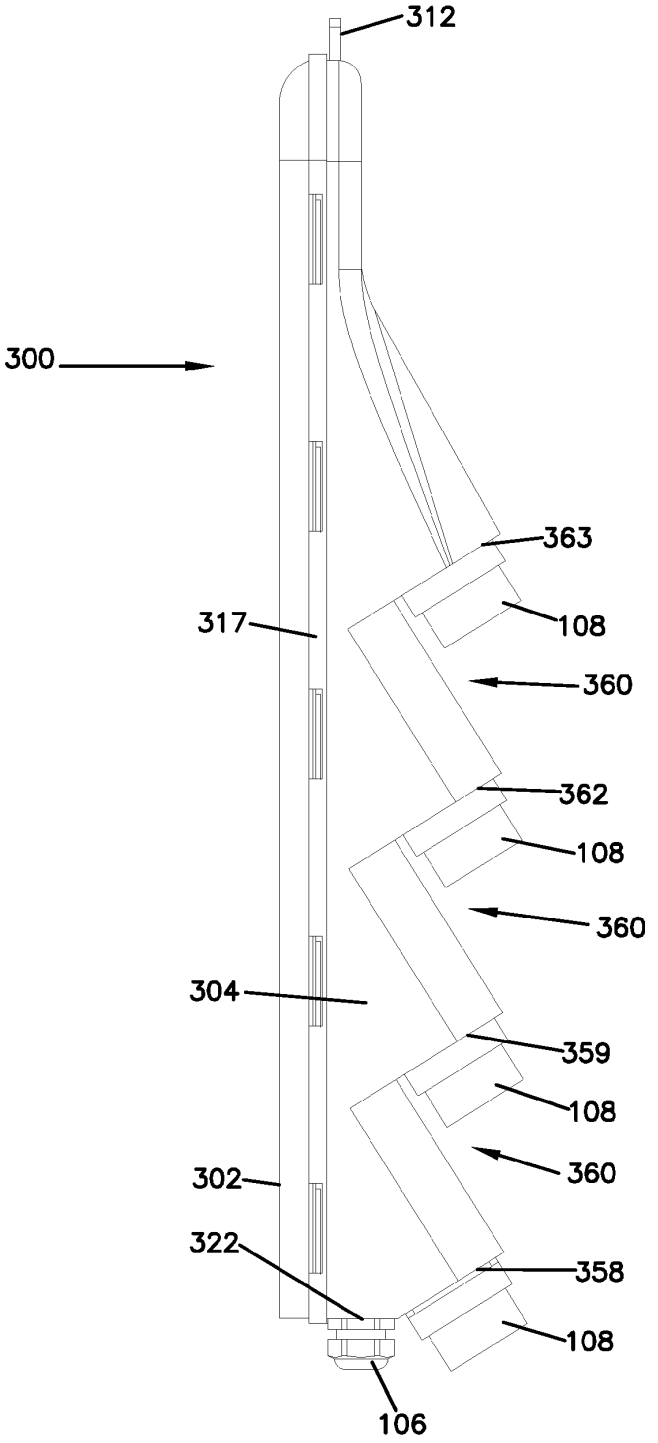
312
300
363
317
108
360
362
108
360
304
359
108
360
302
322
358
108
106

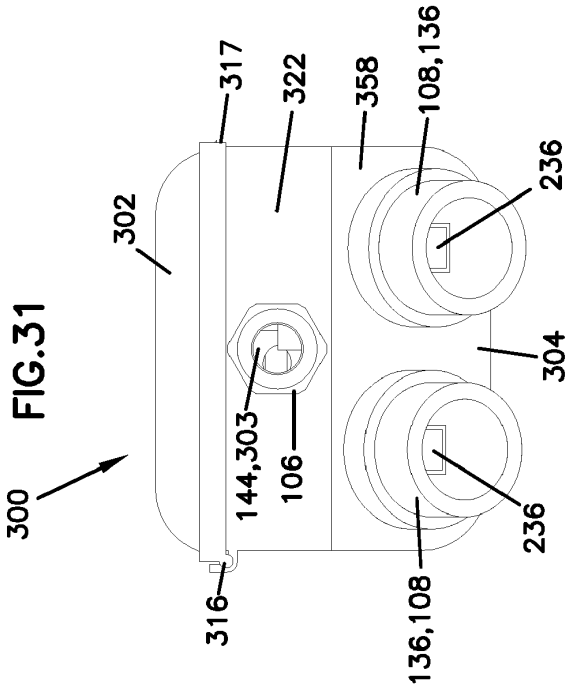
300
302
317
322
358
108,136
236
304
144,303
106
316
136,108
236

FIG.31

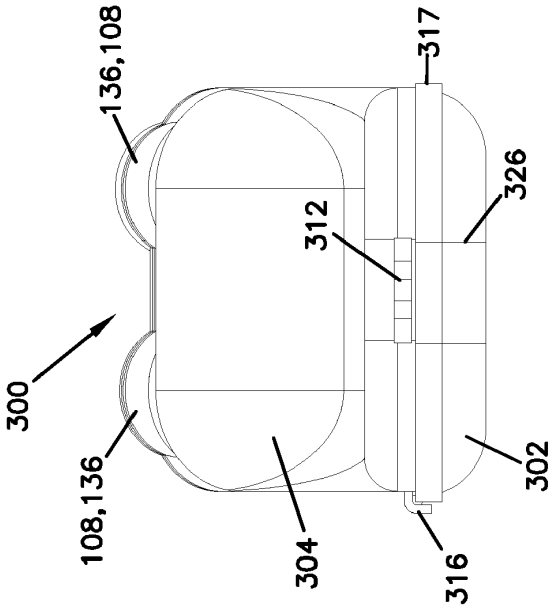
300
136,108
317
326
312
108,136
304
316
302

FIG.32

FIG.33

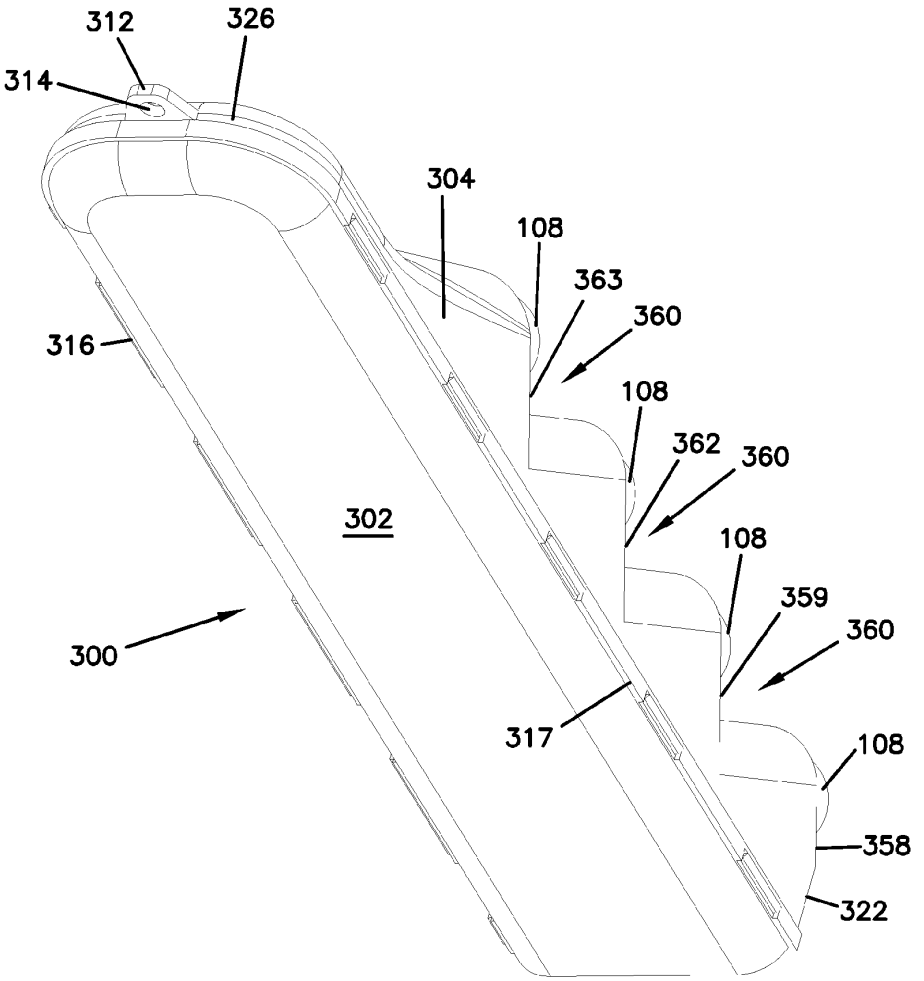
312
326
314
304
108
363
360
316
108
362
360
302
108
359
360
300
317
108
358
322

FIG.34

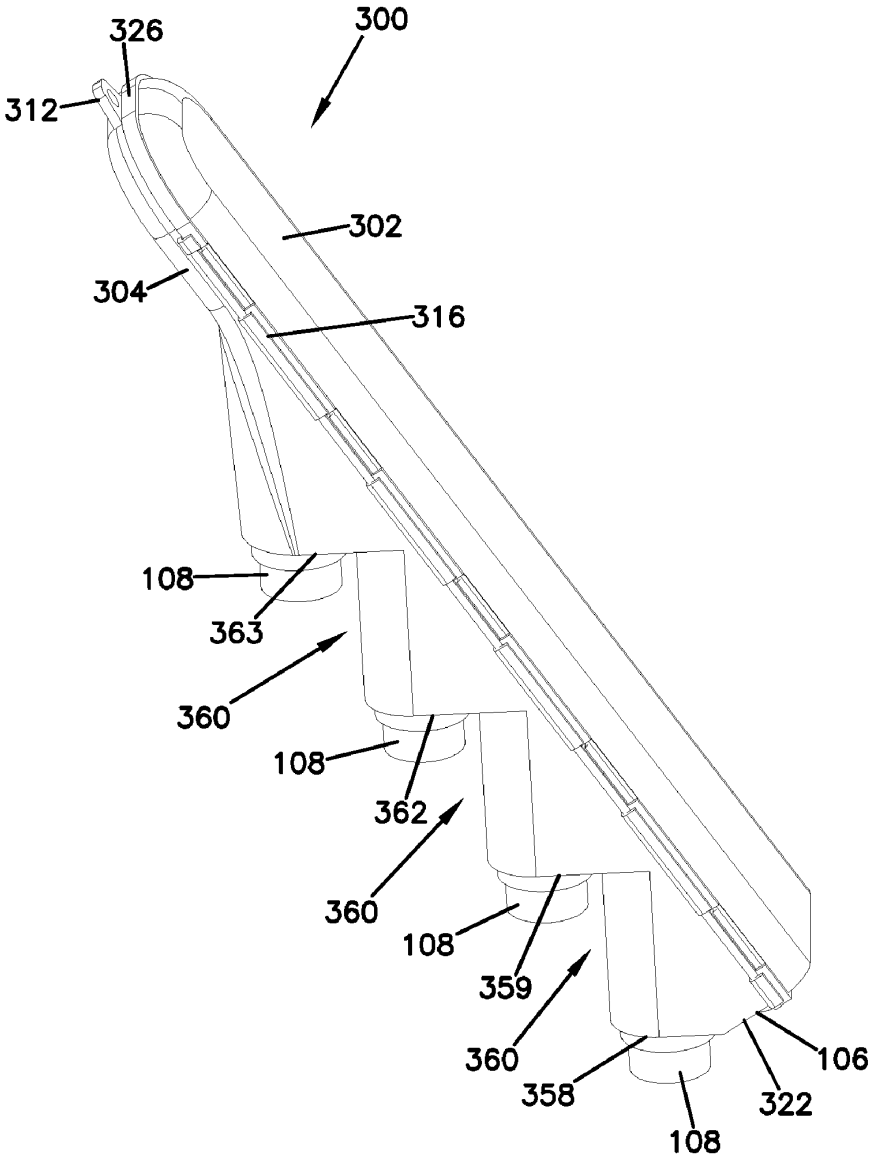
326
300
312
302
304
316
108
363
360
108
362
360
108
359
360
358
108
106
322

FIG.35

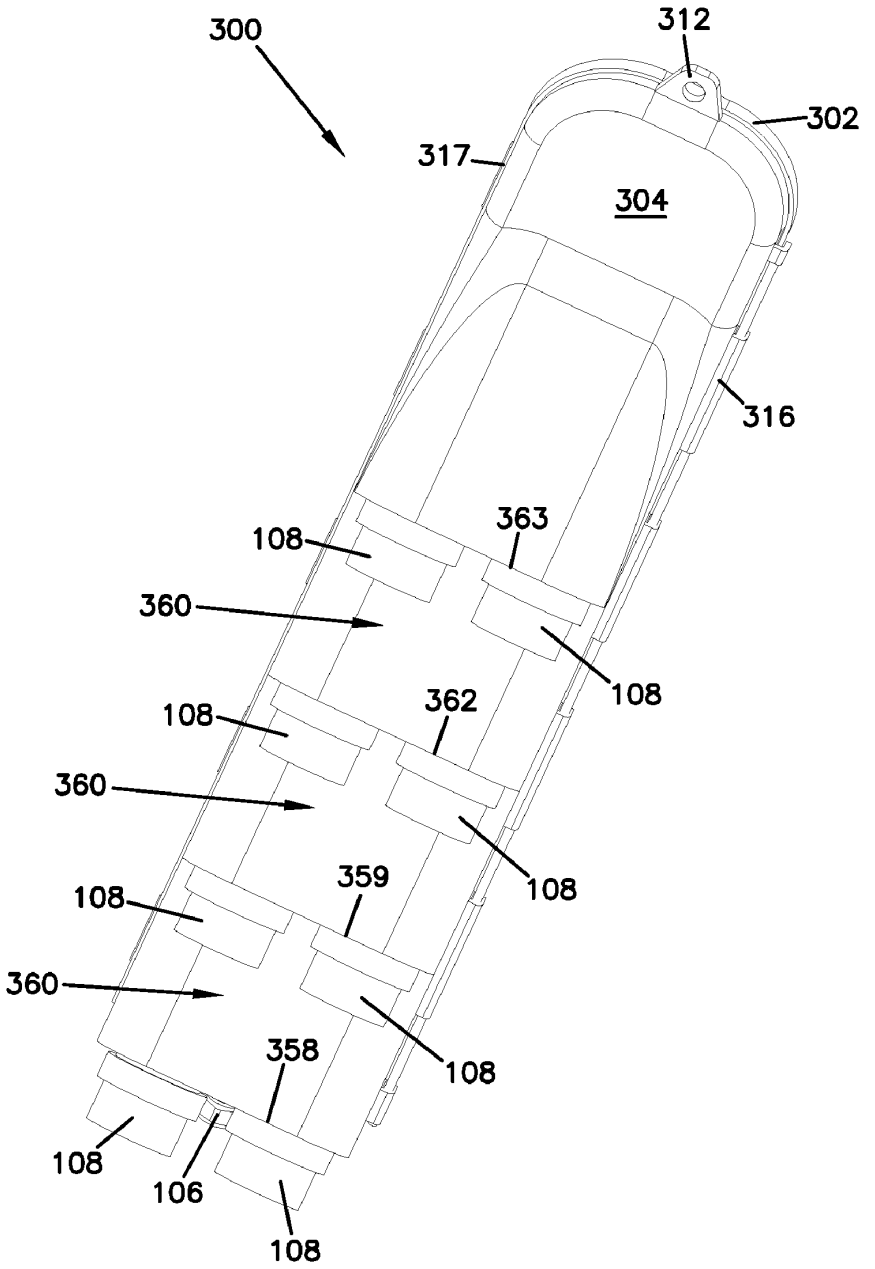
300
312
302
317
304
316
363
108
360
108
362
108
360
359
108
108
360
358
108
108
106
108

FIG.36

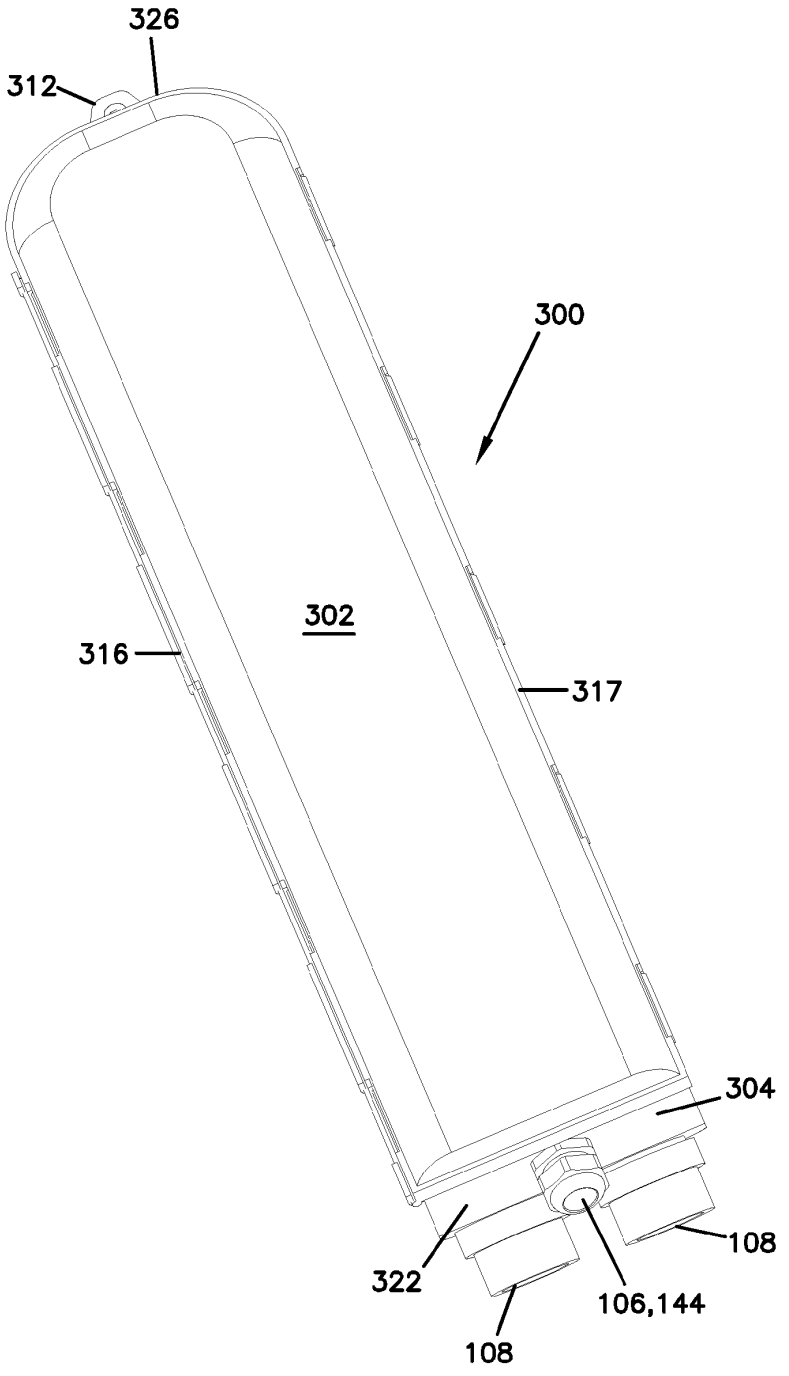

FIG.37

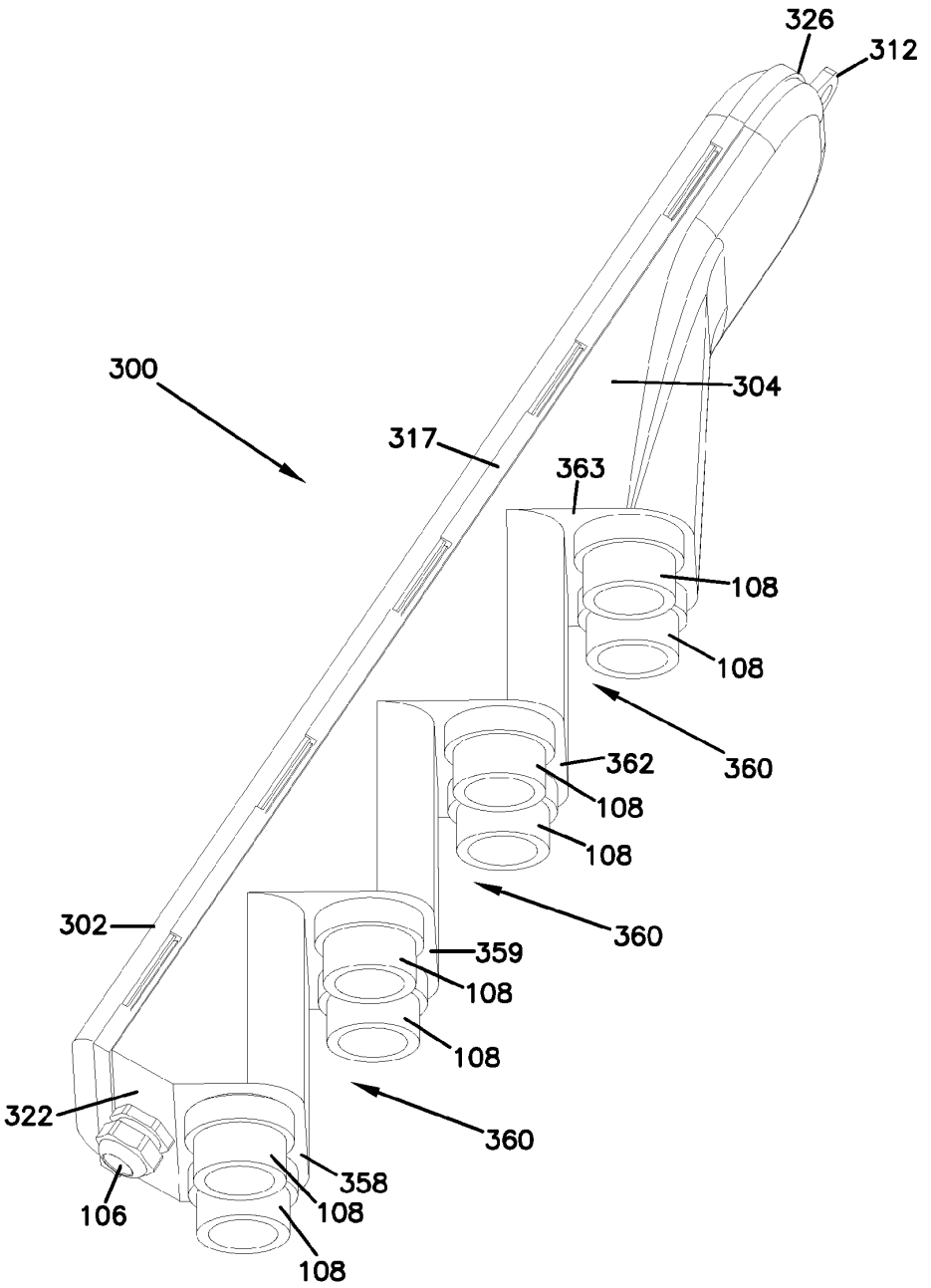
326
312
300
304
317
363
108
108
360
362
108
108
360
302
359
108
108
322
360
358
106
108
108

FIG.38

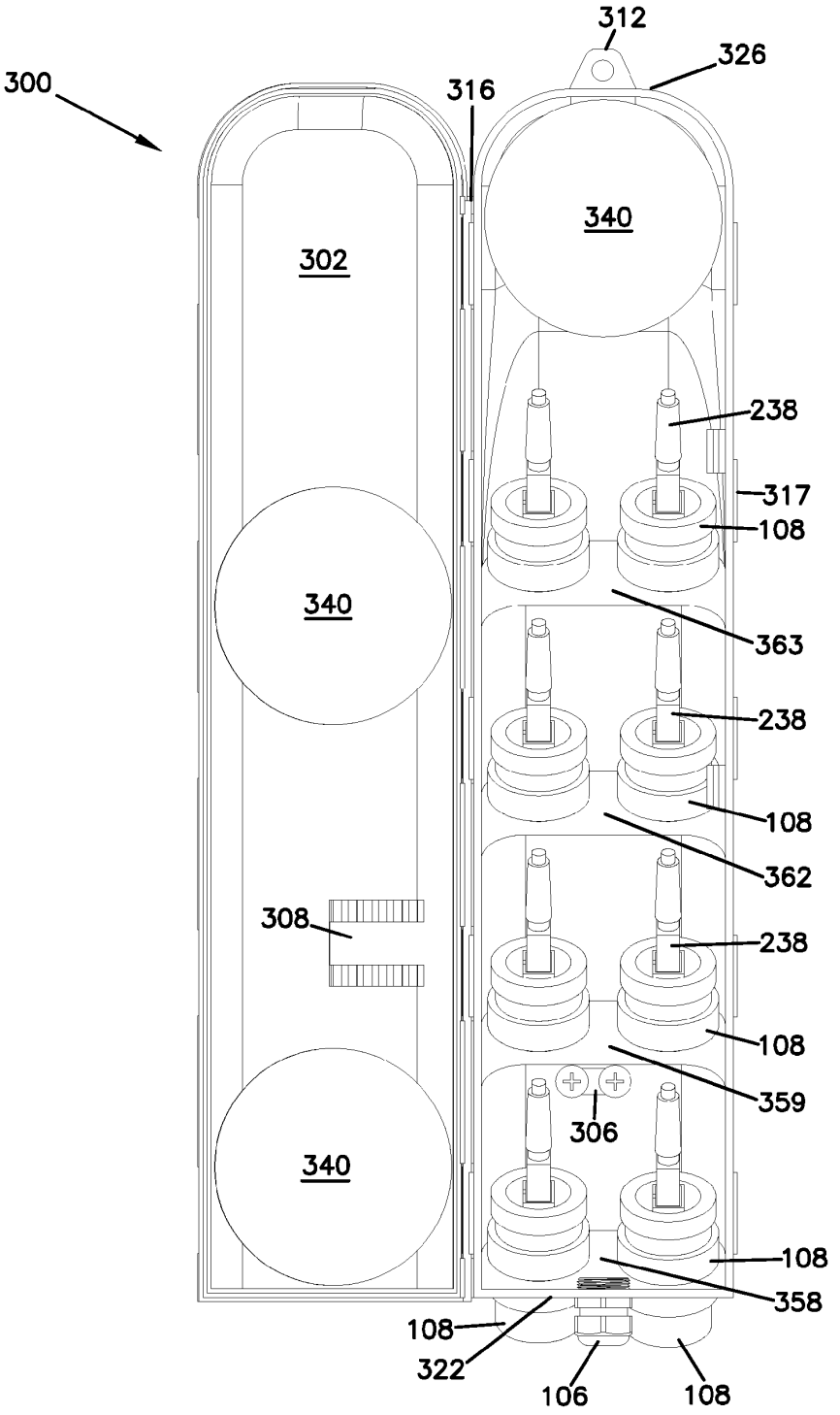
312
326
300
316
340
302
238
317
108
340
363
238
108
362
308
238
108
359
306
340
108
358
108
322
106
108

FIG.39

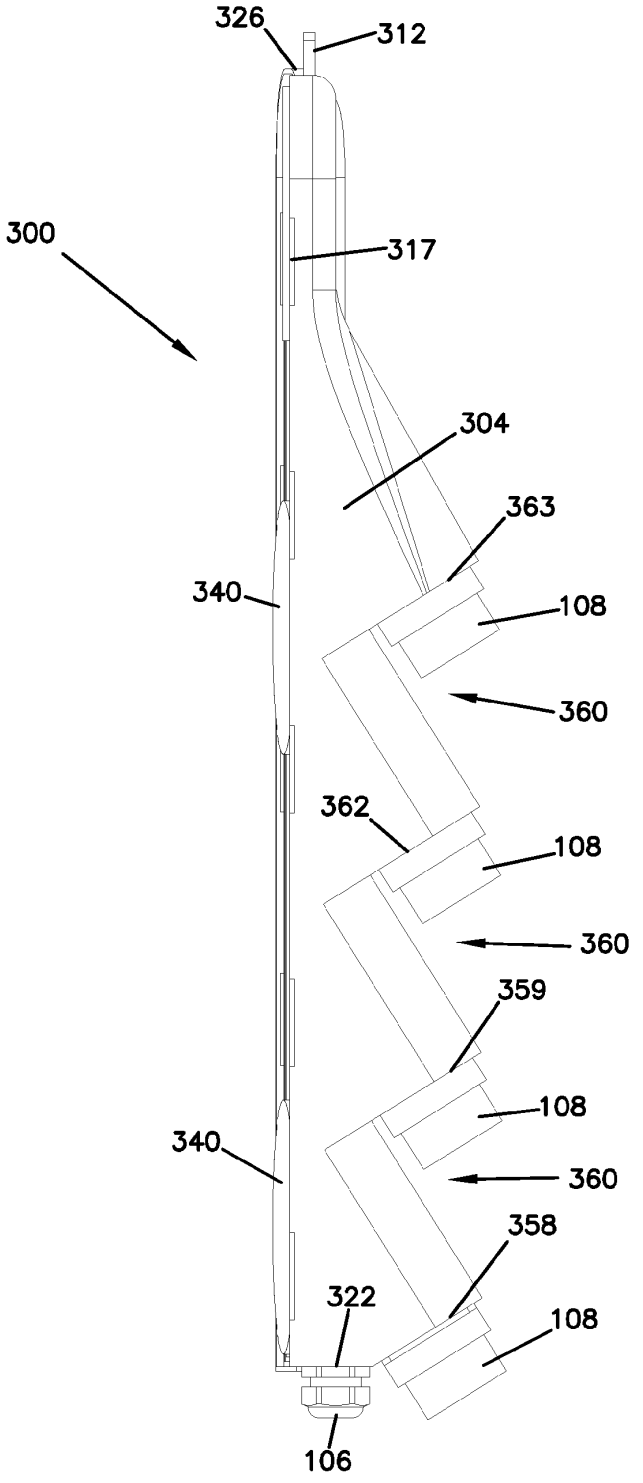
326
312
300
317
304
363
340
108
360
362
108
360
359
108
340
360
358
322
108
106

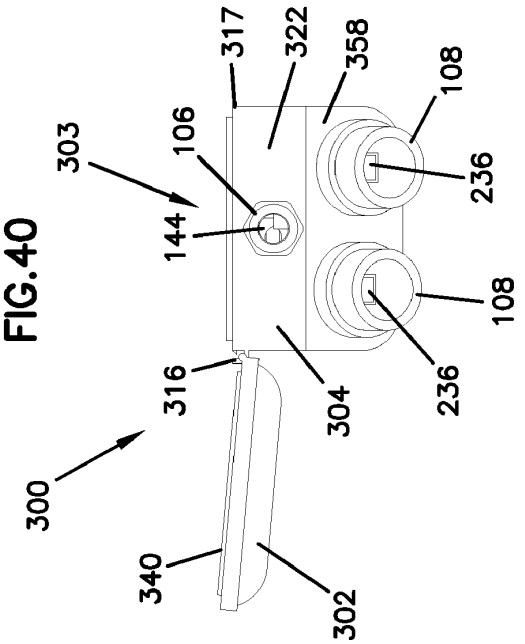
317
322
358
108
303
106
236
144
108
316
304
236
300
340
302

FIG.40

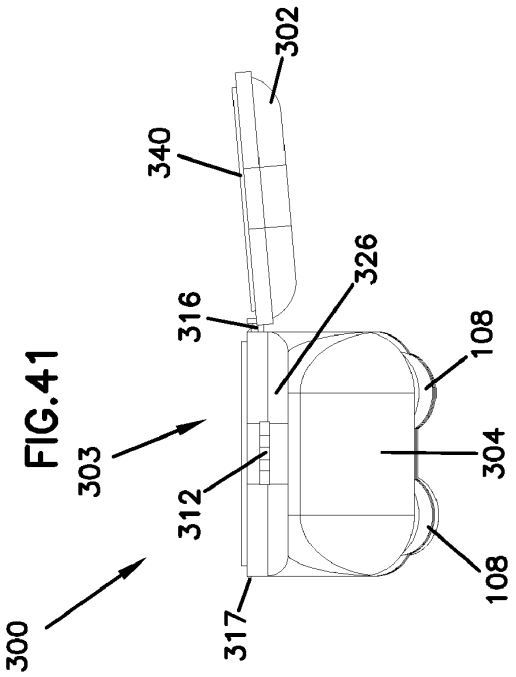
302
340
326
316
108
303
304
312
108
300
317

FIG.41

FIG.42

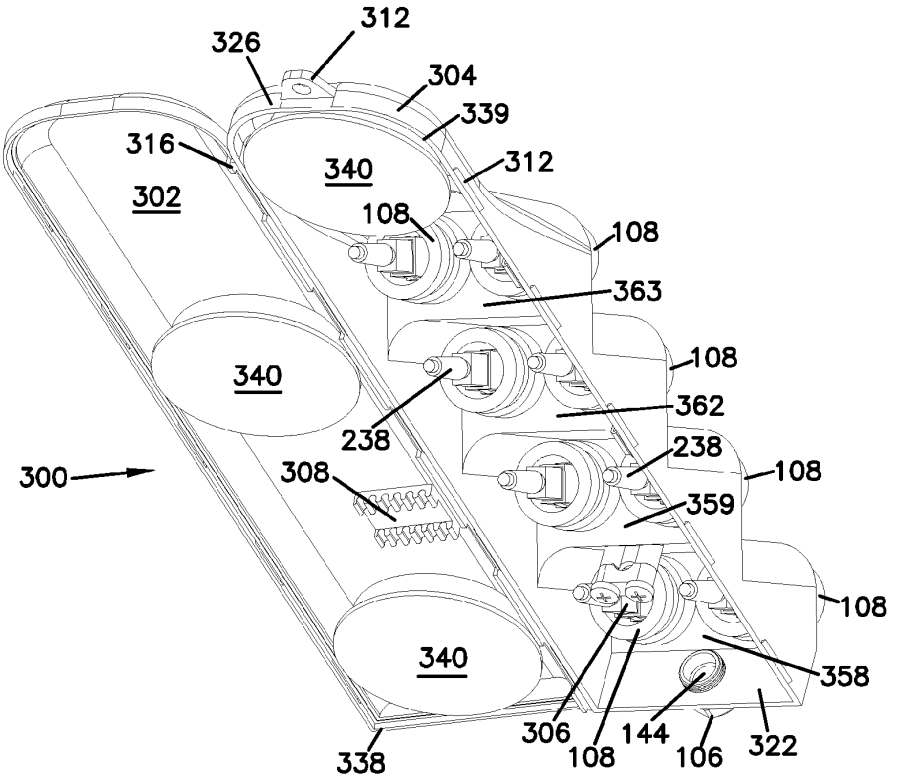
312
326
304
339
316
340
312
302
108
108
363
108
340
362
238
238
300
308
108
359
108
340
358
306
144
322
338
108
106

FIG.43

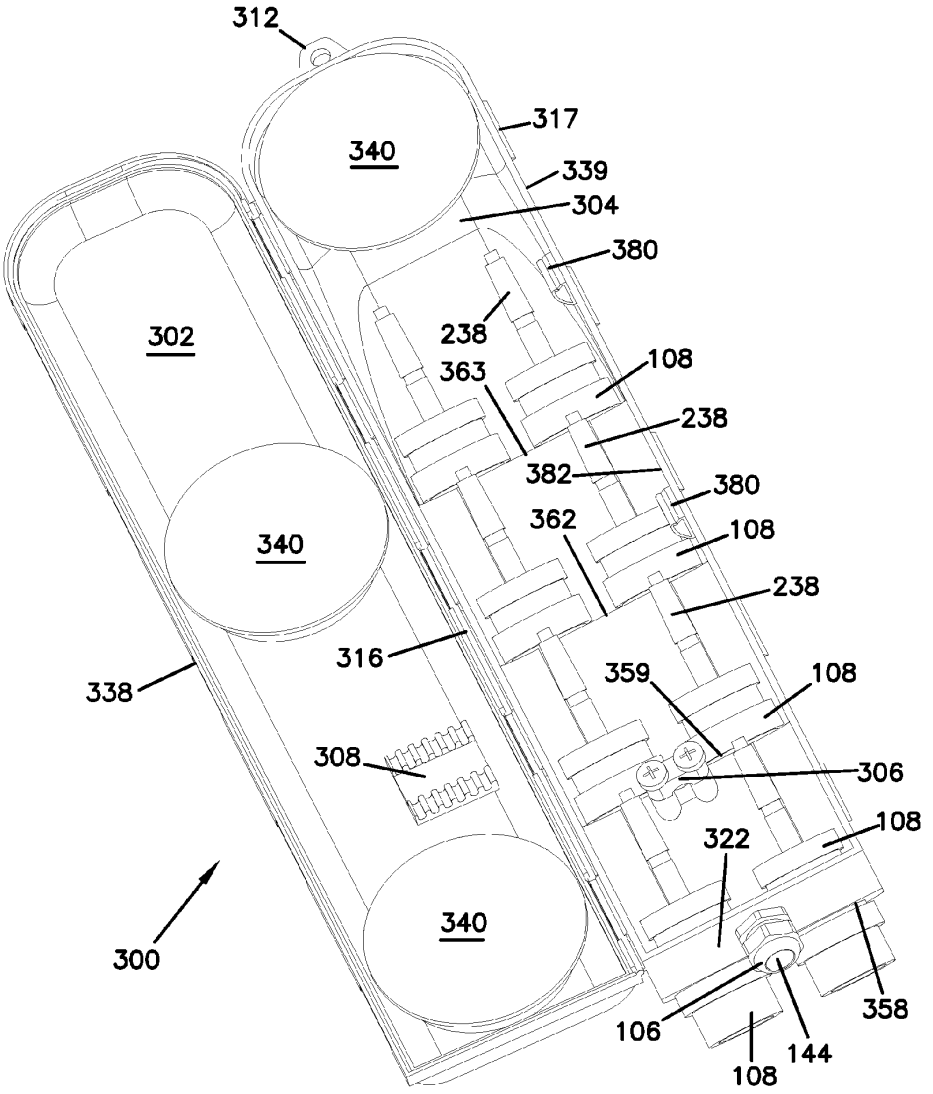
312
317
340
339
304
380
302
238
363
108
238
382
380
362
108
340
238
316
359
108
338
308
306
108
322
340
300
358
106
144
108

FIG.44

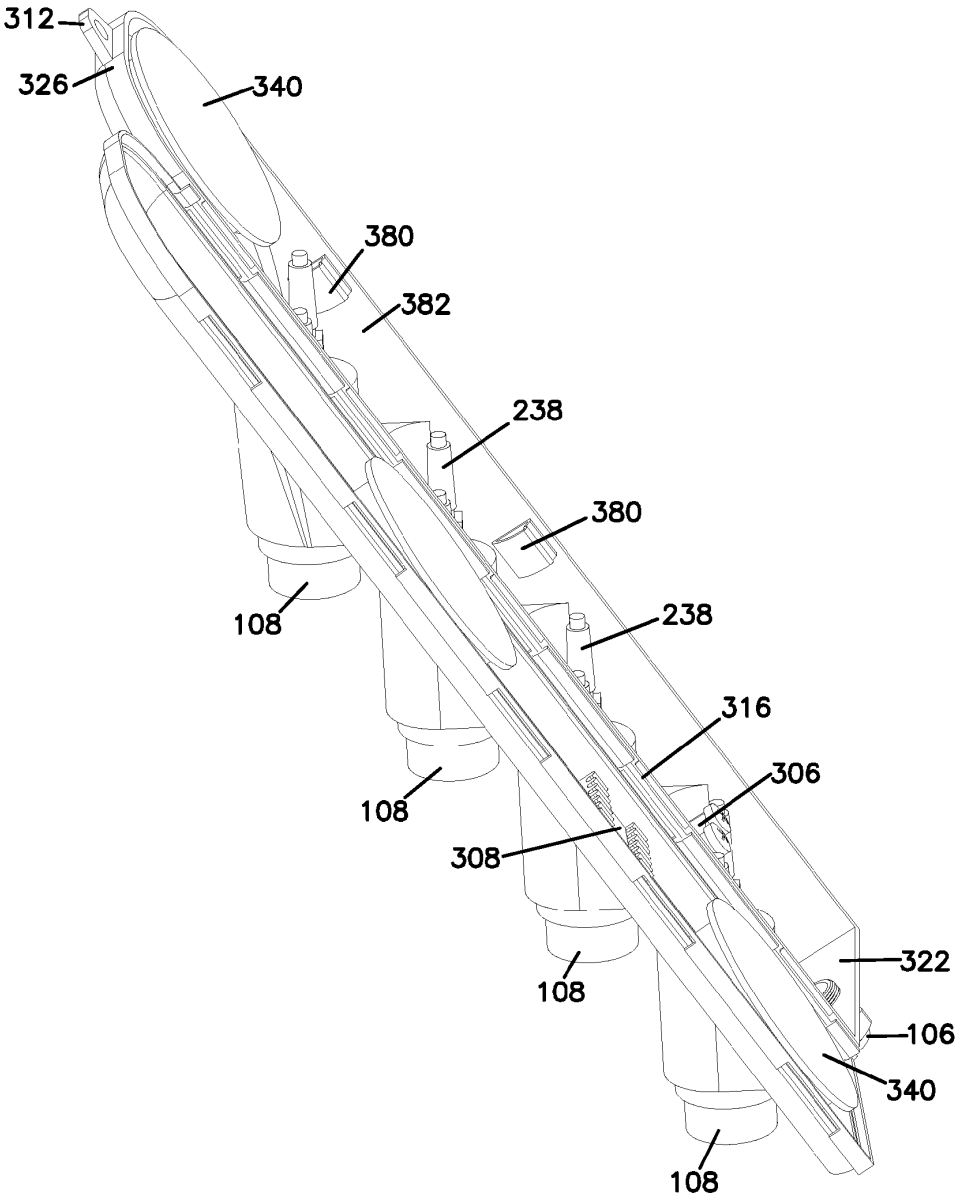
312
326
340
380
382
238
380
108
238
316
306
108
308
322
108
106
340
108

FIG.45

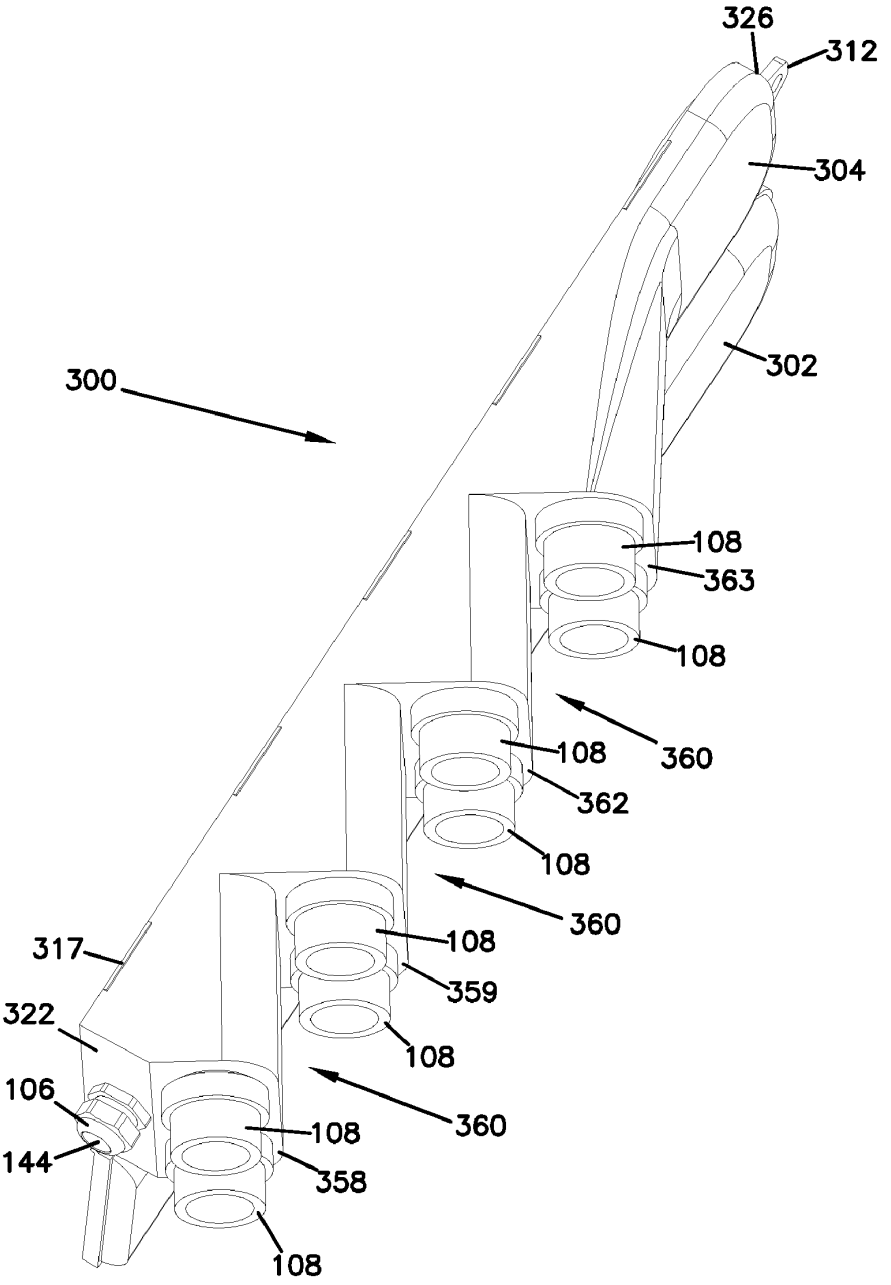
326
312
304
302
300
108
363
108
360
108
362
108
360
108
359
108
360
317
322
106
144
108
358
108

FIG.46

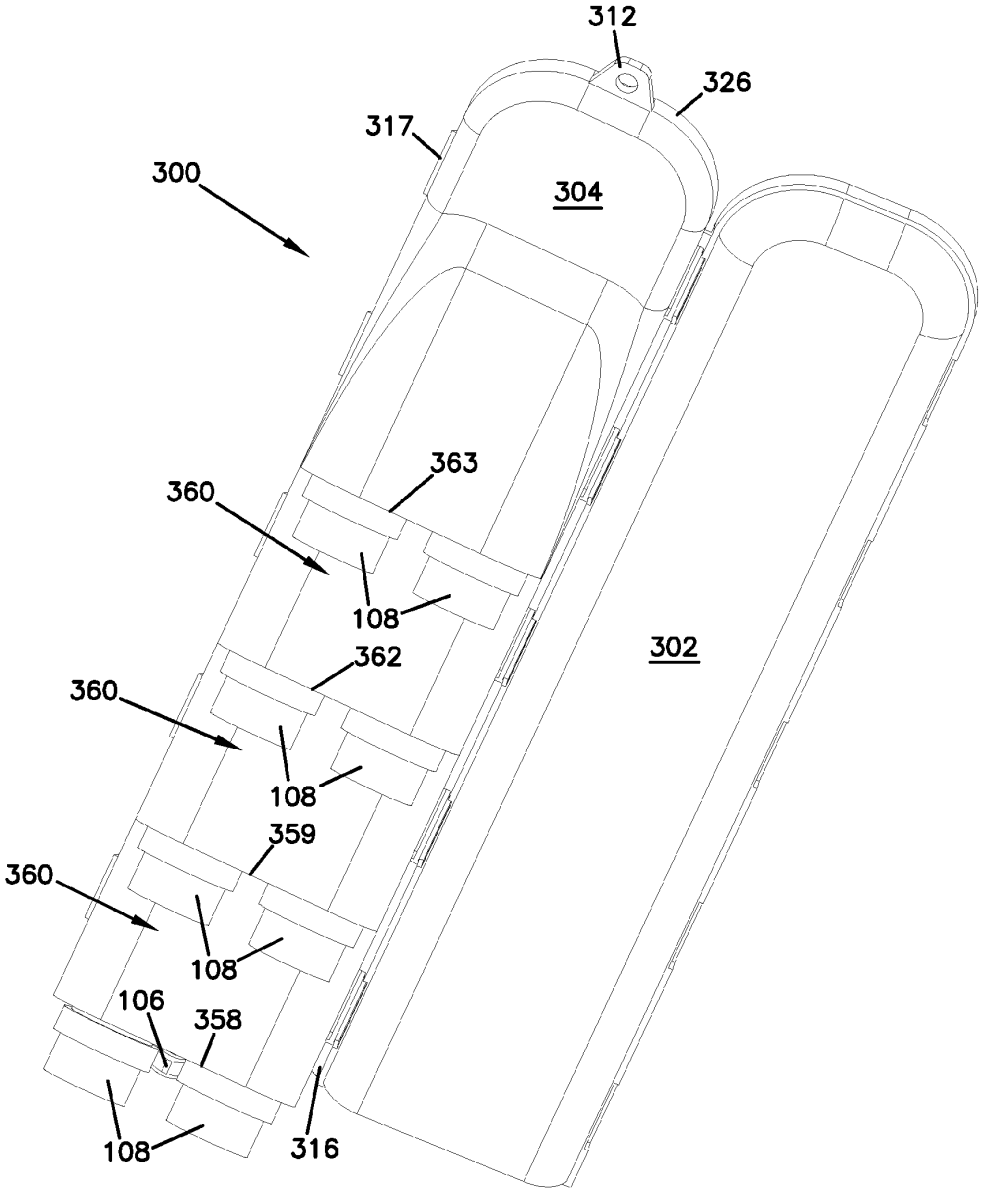
312
326
317
300
304
363
360
108
362
302
360
108
359
360
108
106
358
108
316

FIG.47

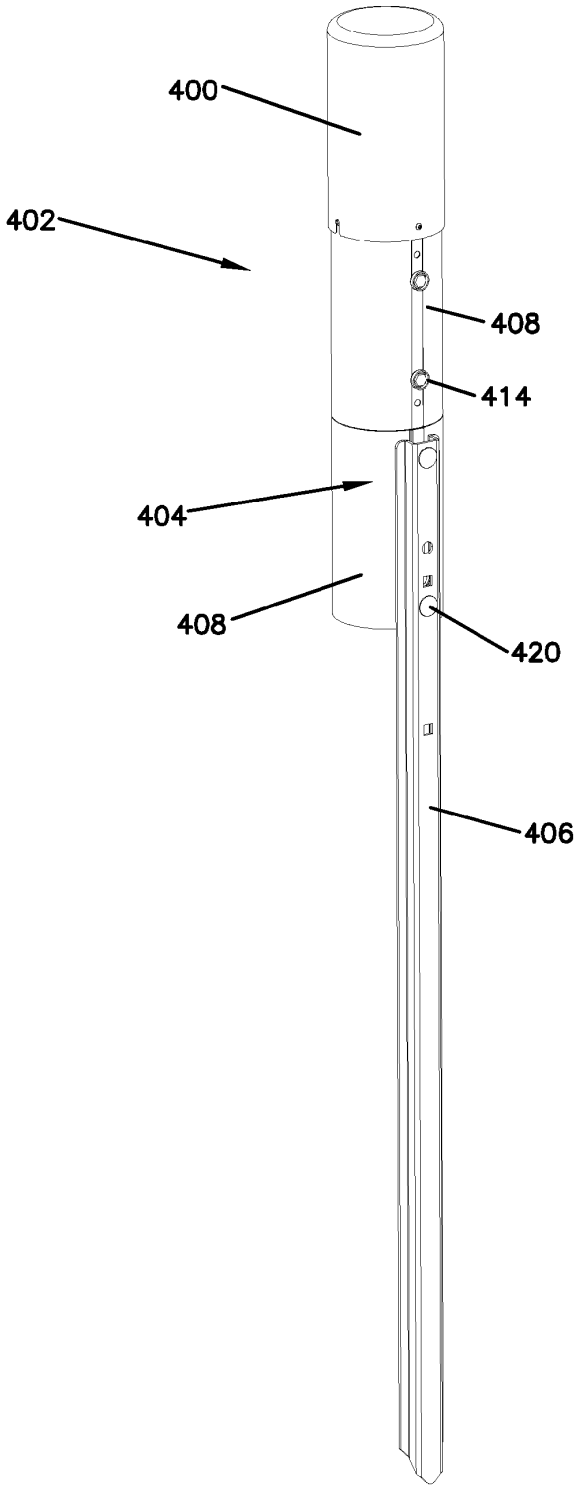

FIG.48

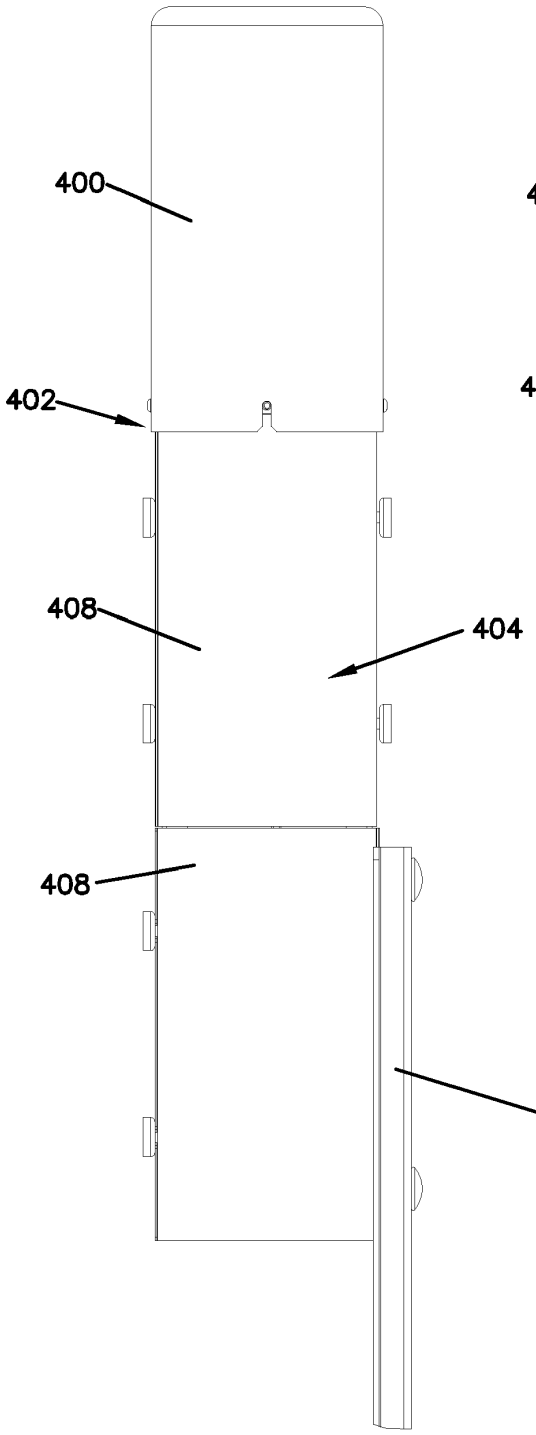

FIG.49

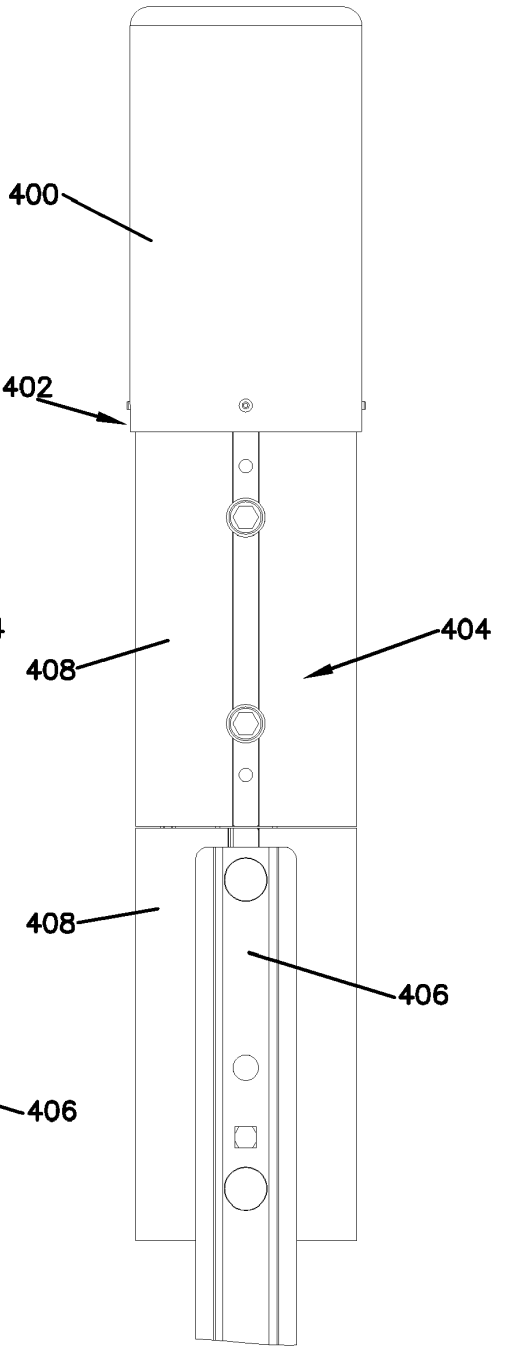

FIG.50

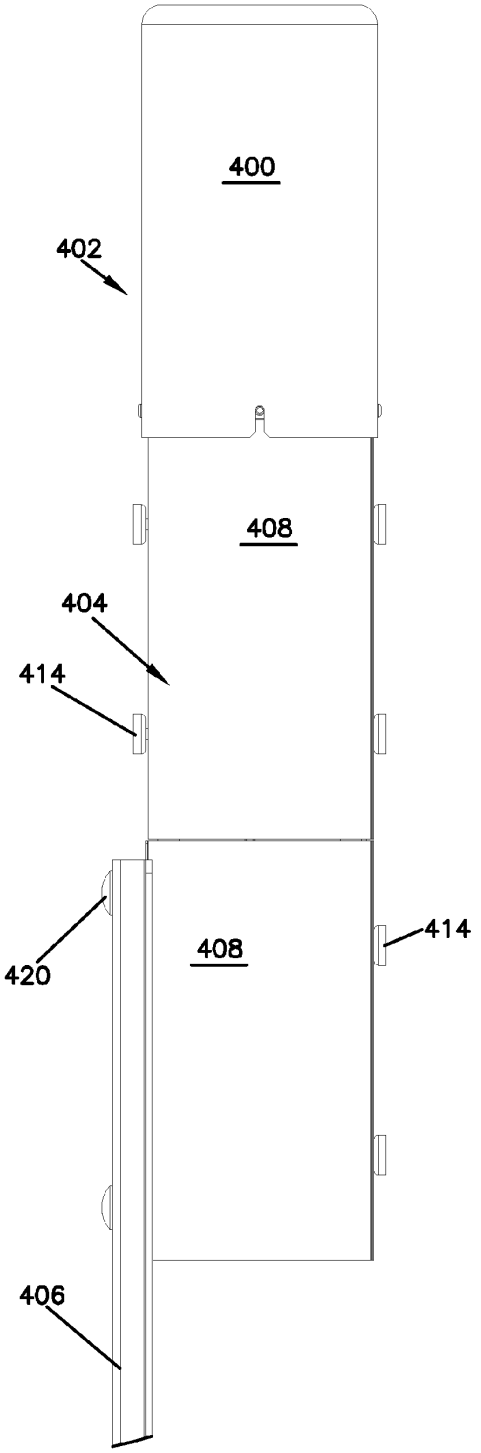
400
402
408
404
414
420
408
414
406

FIG.51

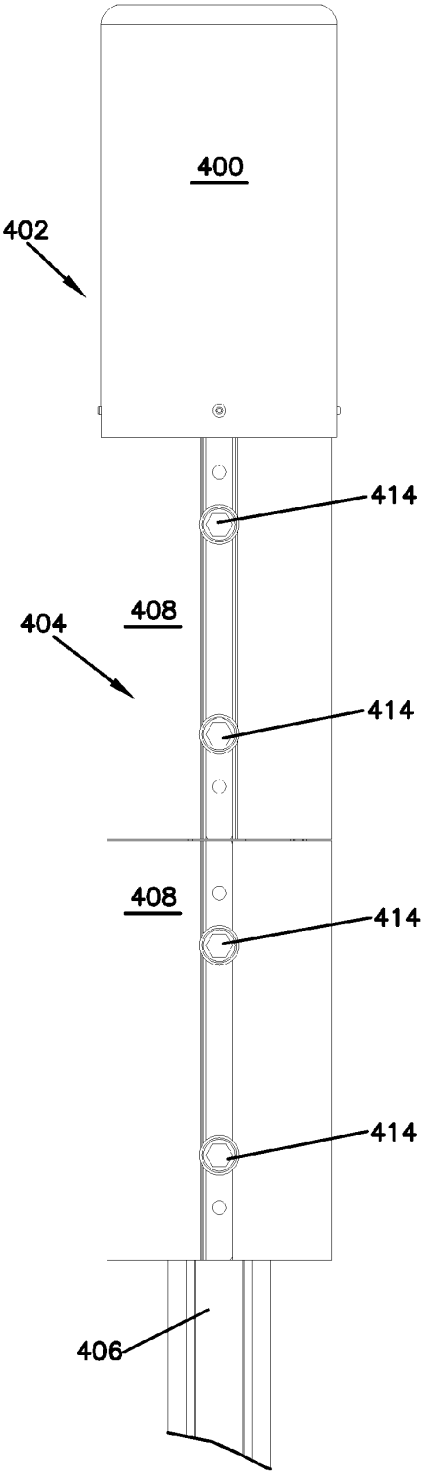
400
402
414
404
408
414
408
414
414
406

FIG.52

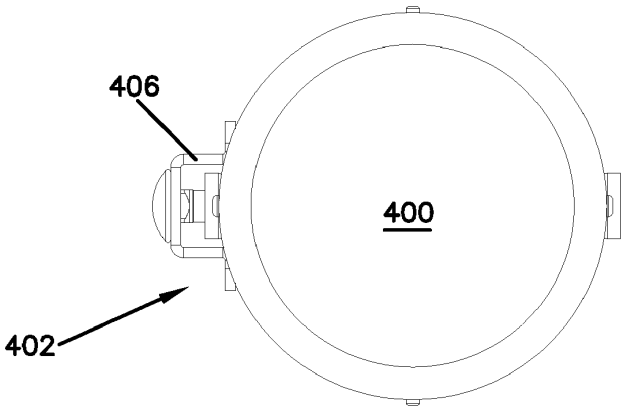
406
400
402

FIG.53

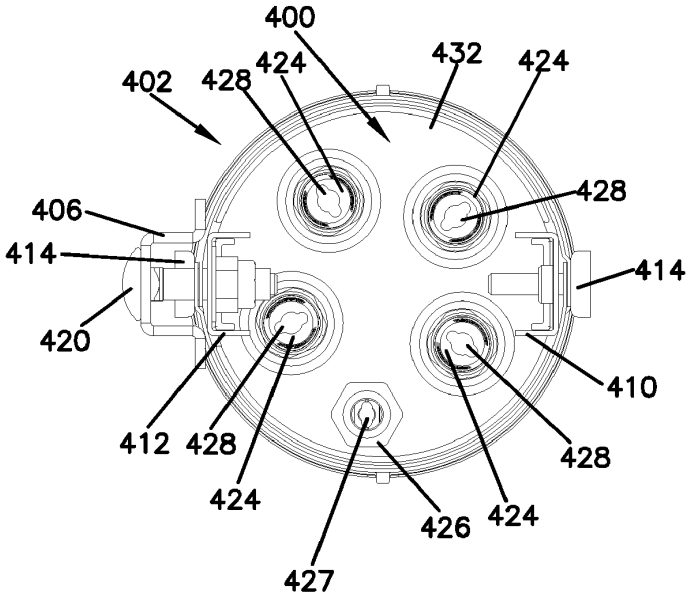
400
432
424
402
428
424
428
406
414
414
420
410
412
428
428
424
426
424
427

FIG.54

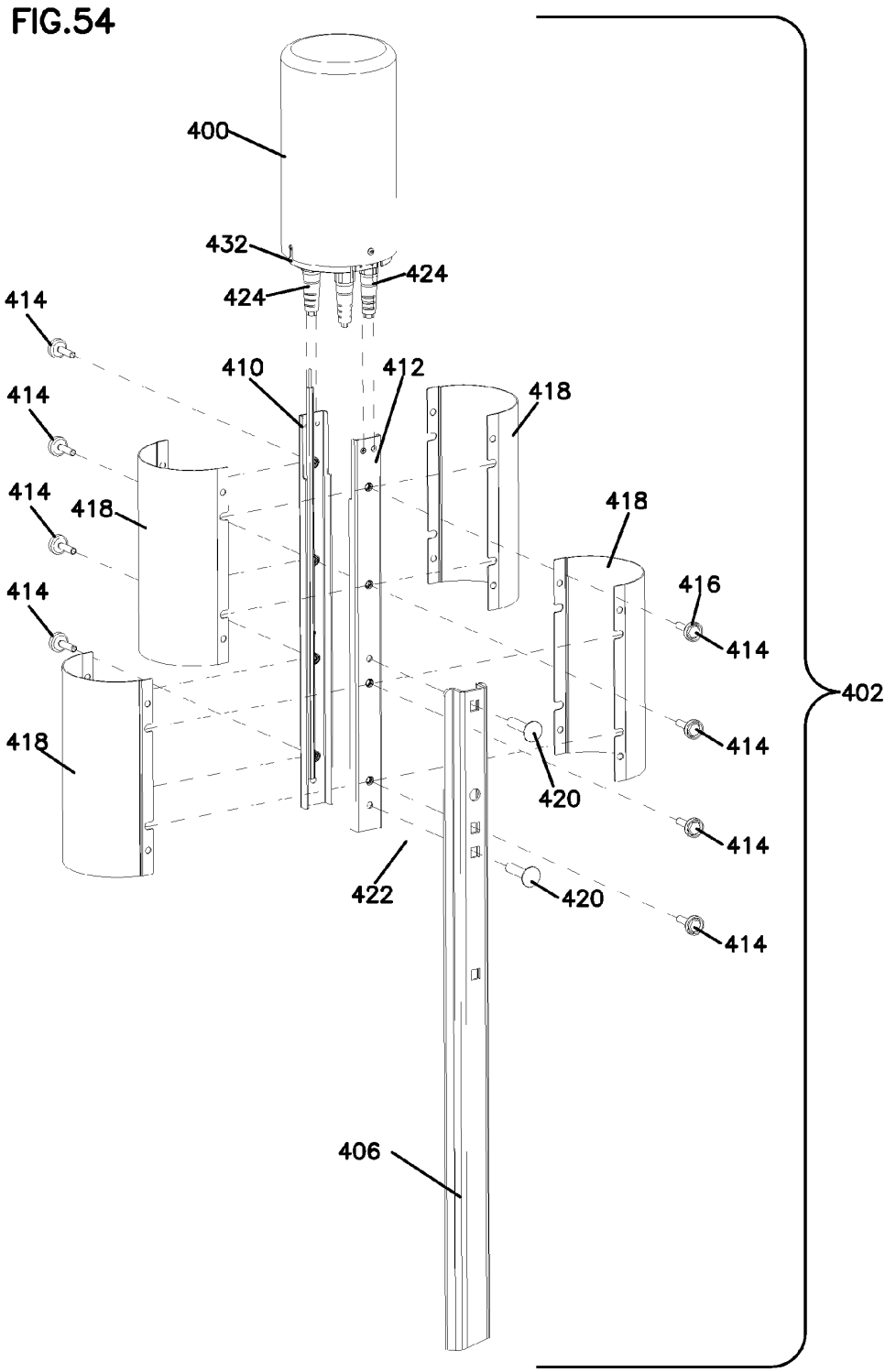
400
432
424
424
414
414
414
414
410
412
418
418
418
416
414
414
414
414
414
420
420
422
402
406

FIG.55

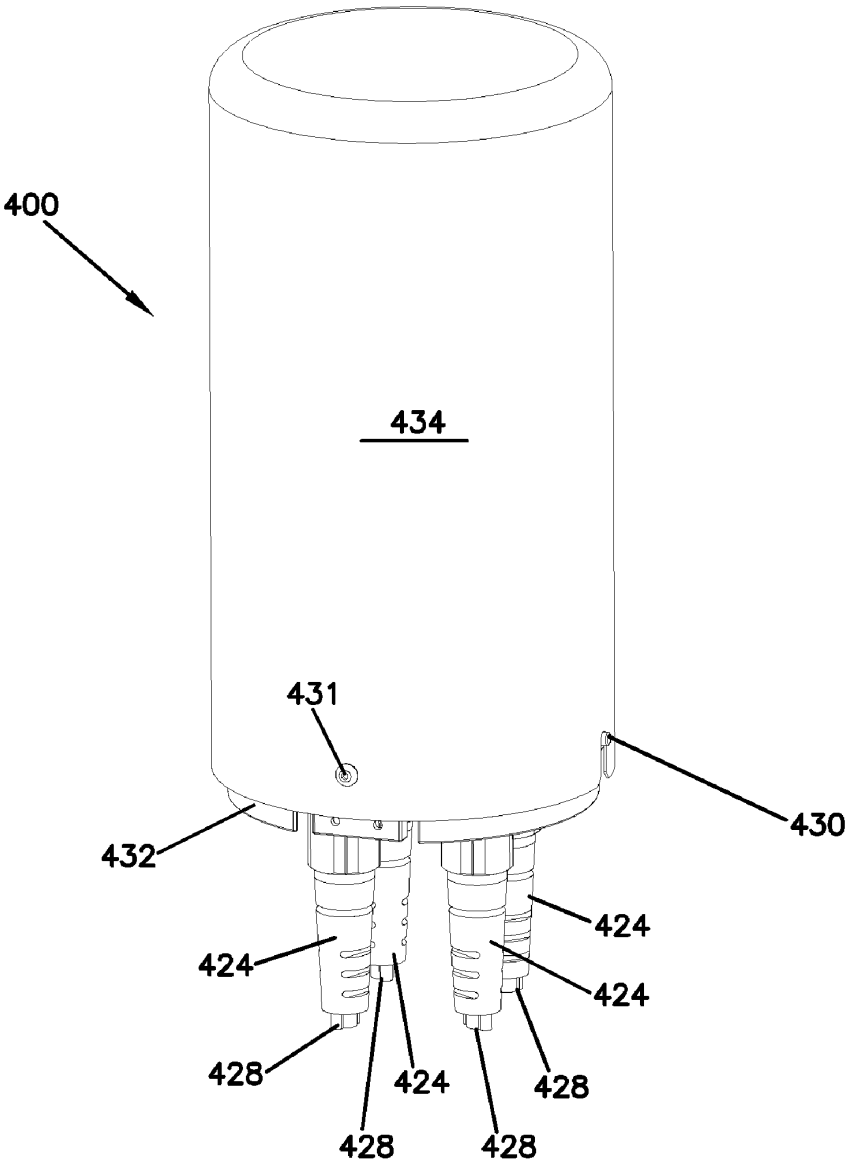

FIG.56

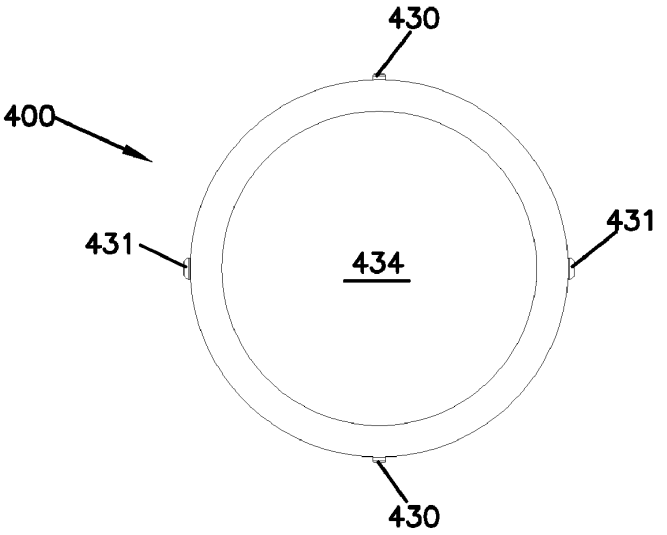
430
400
431
431
434
430

FIG.57

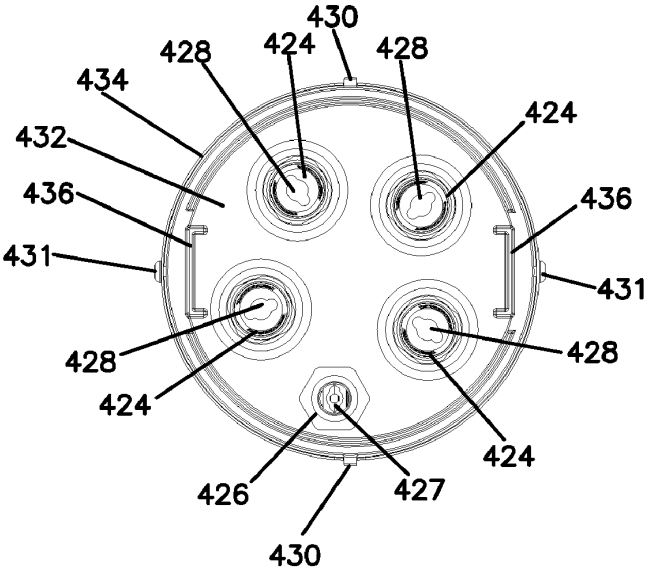
430
428
424
428
434
424
432
436
436
431
431
428
428
424
424
426
427
430

FIG.58

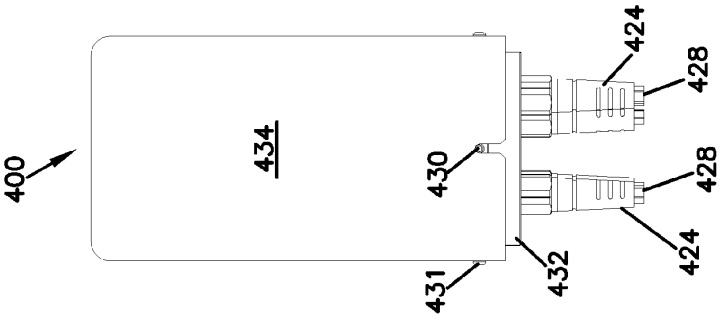

FIG.59

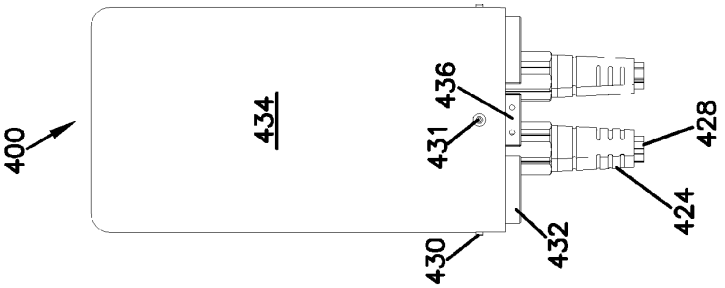

FIG.60

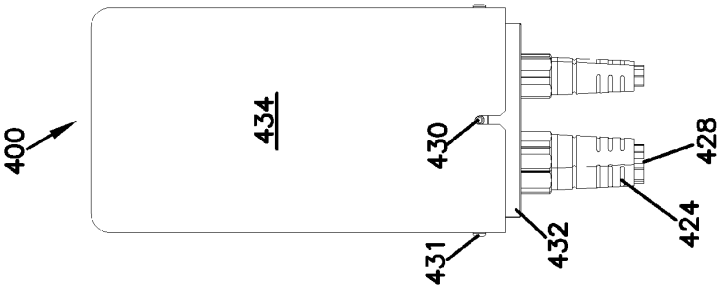

FIG.61

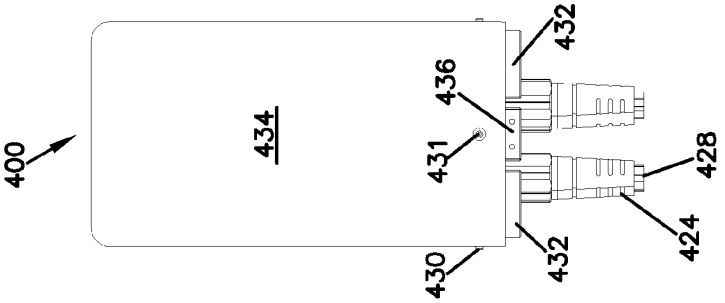

FIG.62

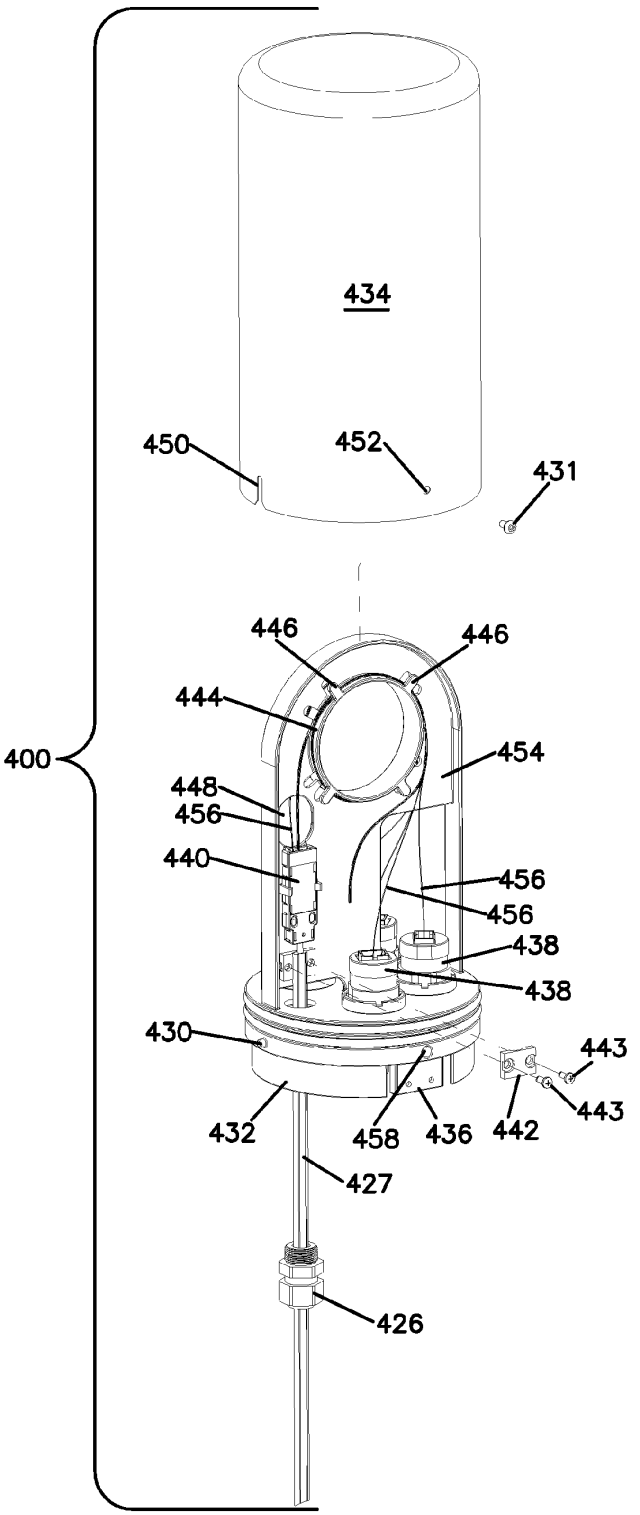
434
450
452
431
446
446
444
400
454
448
456
440
456
456
438
438
430
443
443
432
458
436
442
427
426

FIG.63

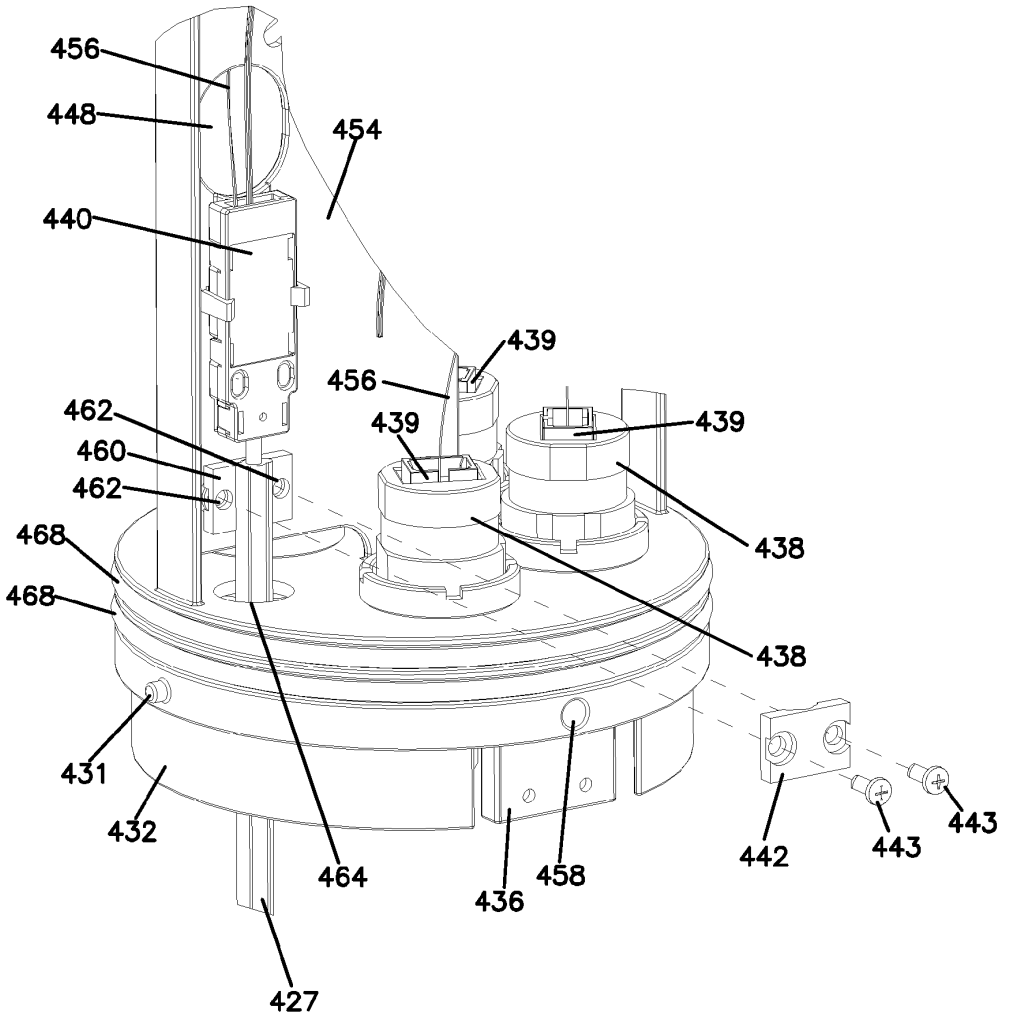
456
448
454
440
439
456
439
439
462
460
462
438
468
468
438
431
432
464
436
458
442
443
443
427

FIG.64

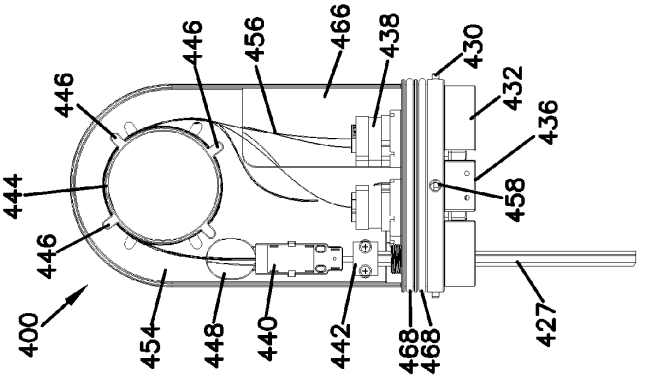

FIG.65

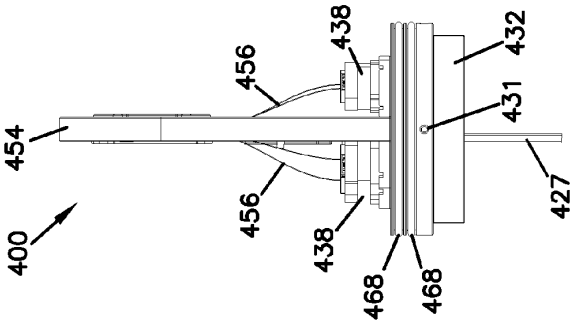

FIG.66

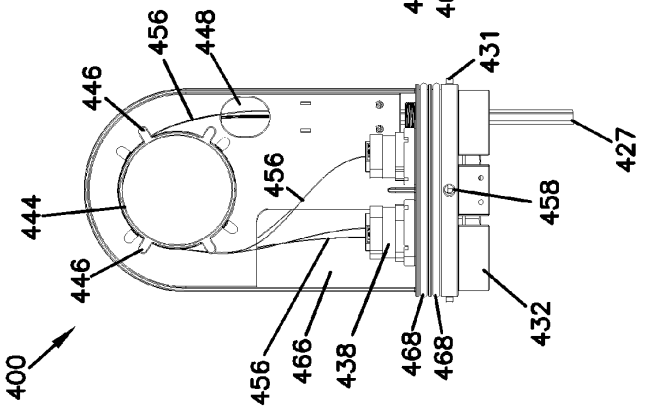

FIG.67

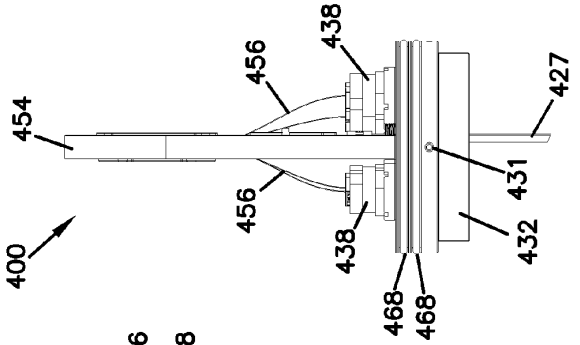

FIG.68

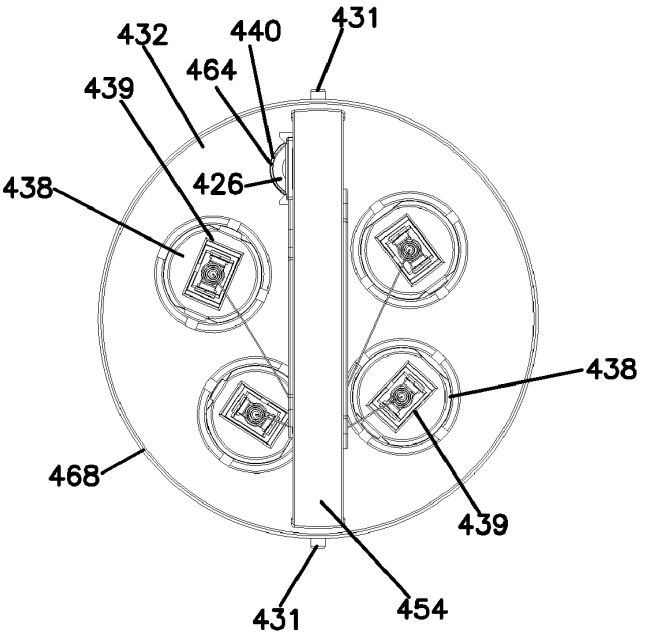
432
440
431
464
439
438
426
438
468
439
431
454

FIG.69

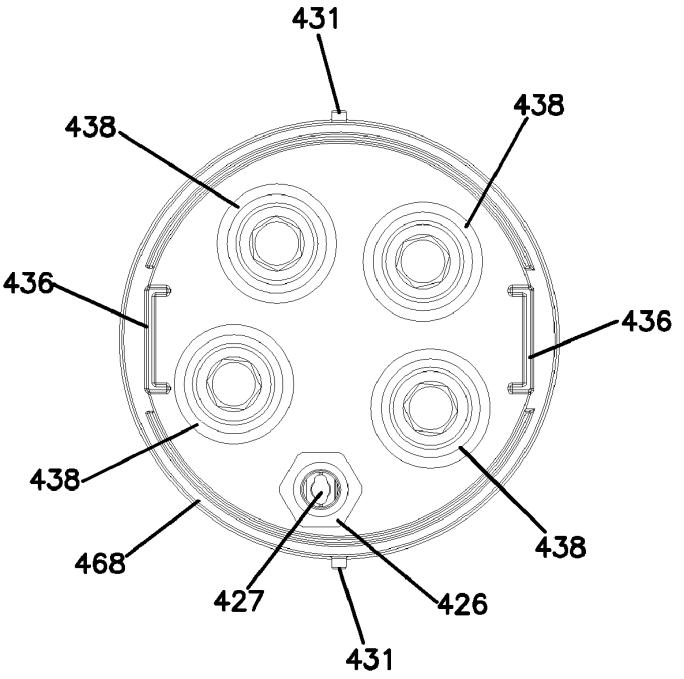
431
438
438
436
436
438
438
468
427
426
431

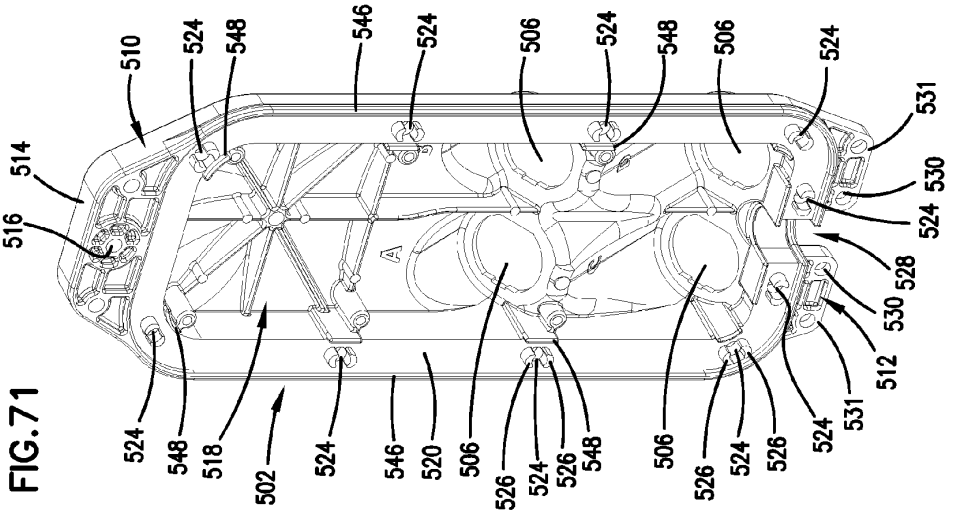
510
514
516
524
548
546
524
506
524
548
506
524
531
530
524
528
530
512
531
524
548
518
502
524
546
520
506
526
524
526
548
506
526
524
526
524

FIG.71

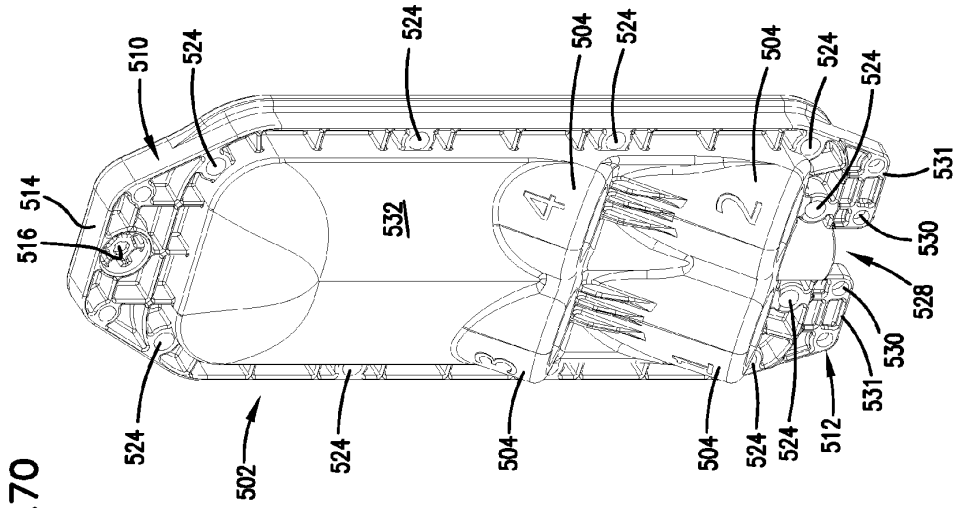
510
514
516
524
524
504
524
504
524
524
531
530
528
530
531
512
524
524
504
524
502
524
504
524
532
4
2
3
1

FIG.70

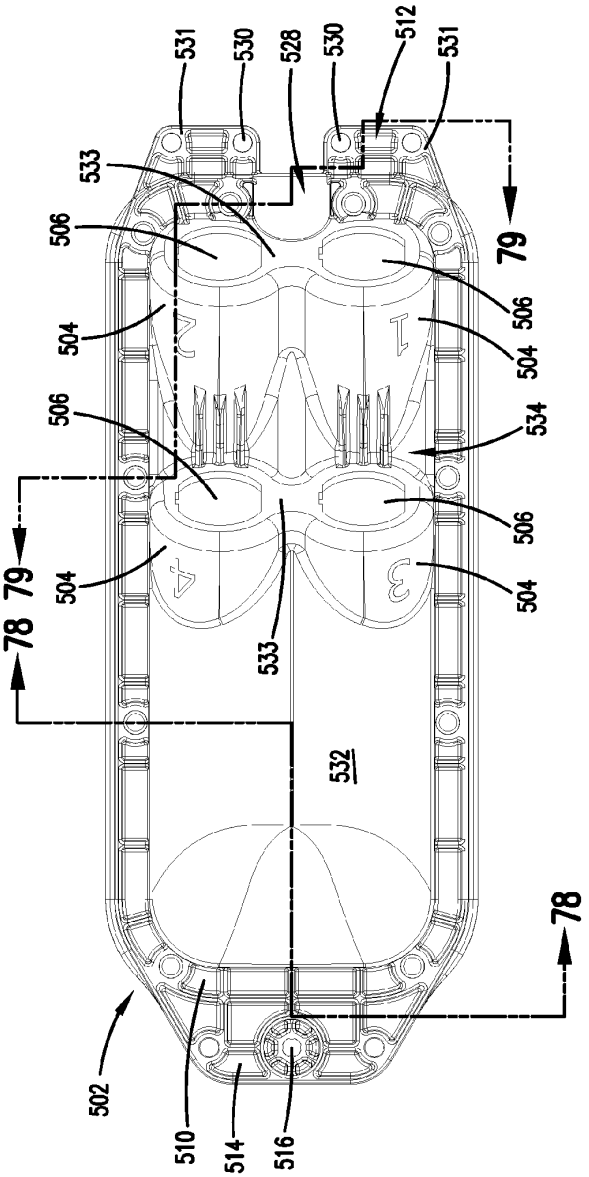
531
530
528
530
512
531
533
506
79
506
504
504
506
534
506
79
504
504
78
533
532
78
502
510
514
516

FIG.72

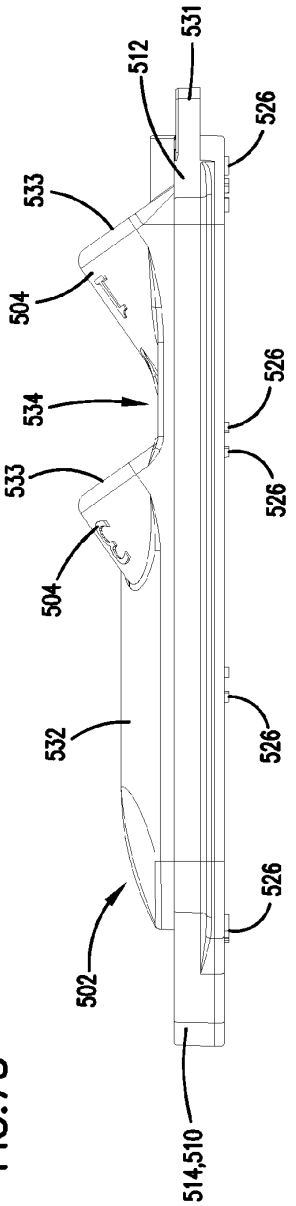
512
531
526
533
504
526
534
533
526
504
532
526
502
526
514,510

FIG.73

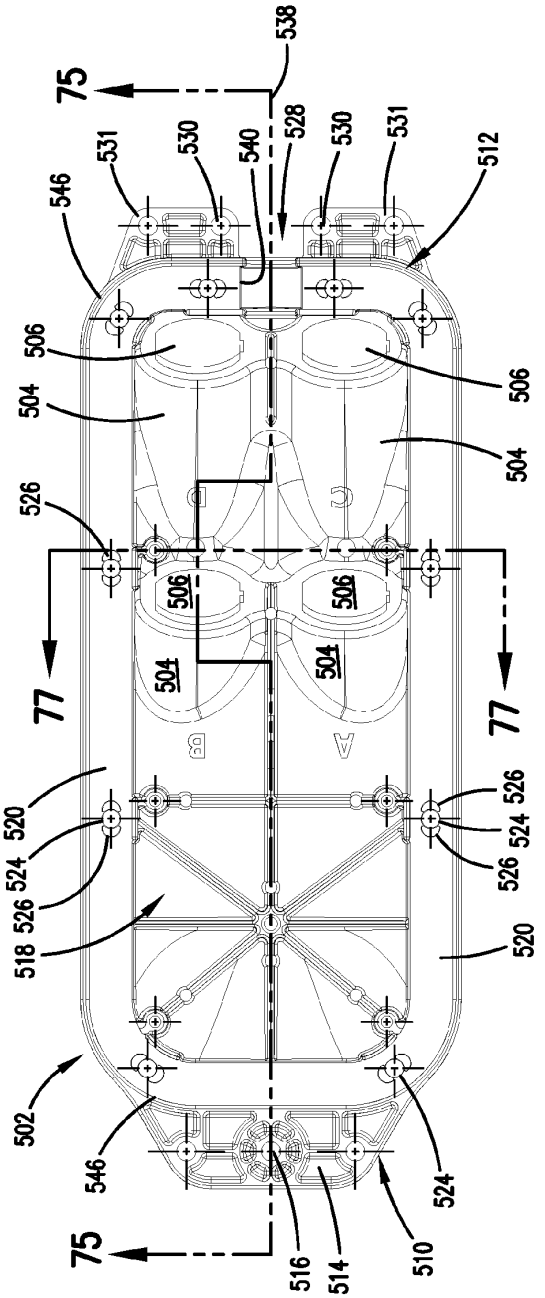
75
538
528
540
530
530
531
531
512
546
506
506
504
504
526
506
506
504
504
77
77
520
524
526
518
526
524
526
520
502
546
524
510
514
516
75

FIG.74

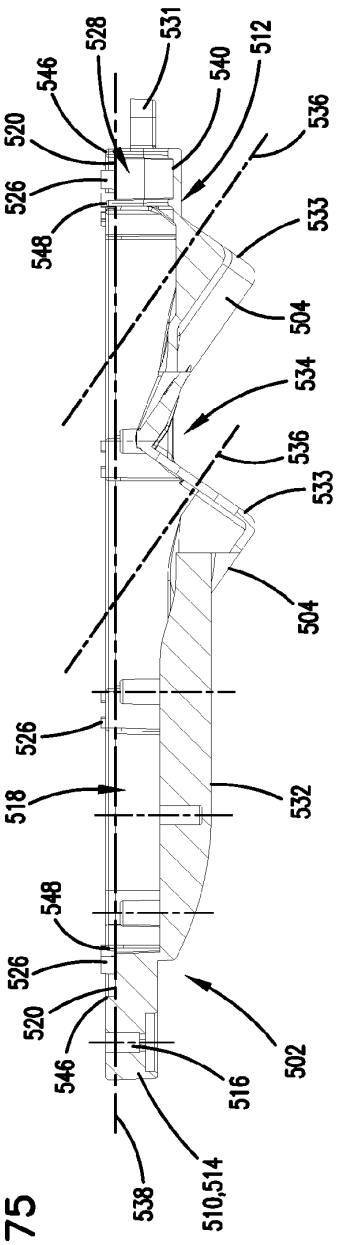
528
531
546
540
512
520
536
526
533
548
504
534
536
533
504
526
518
532
548
526
520
546
502
516
538
510,514

FIG.75

FIG.76

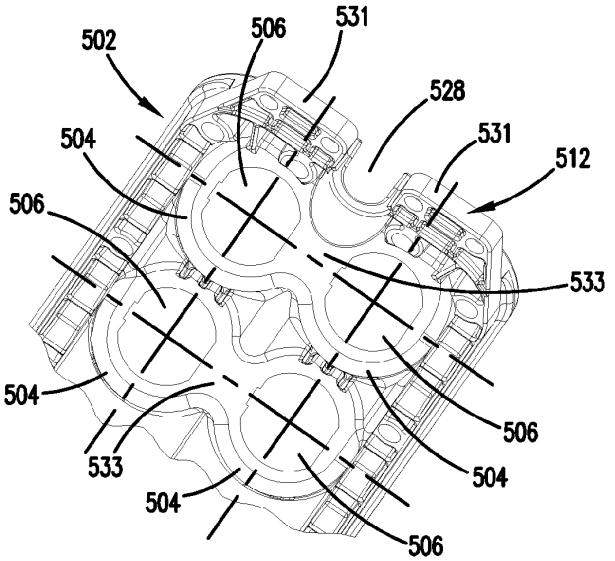

FIG.77

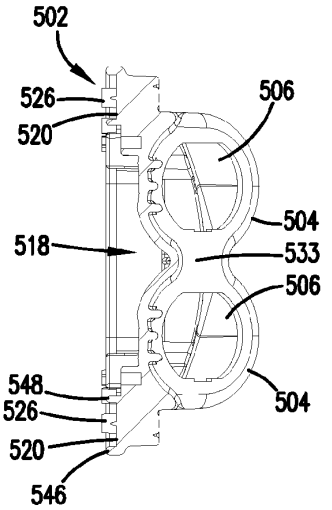

FIG.78

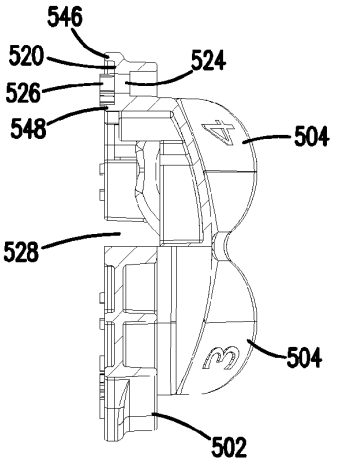

FIG.79

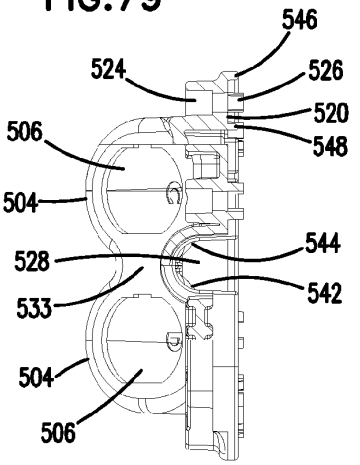

FIG.80

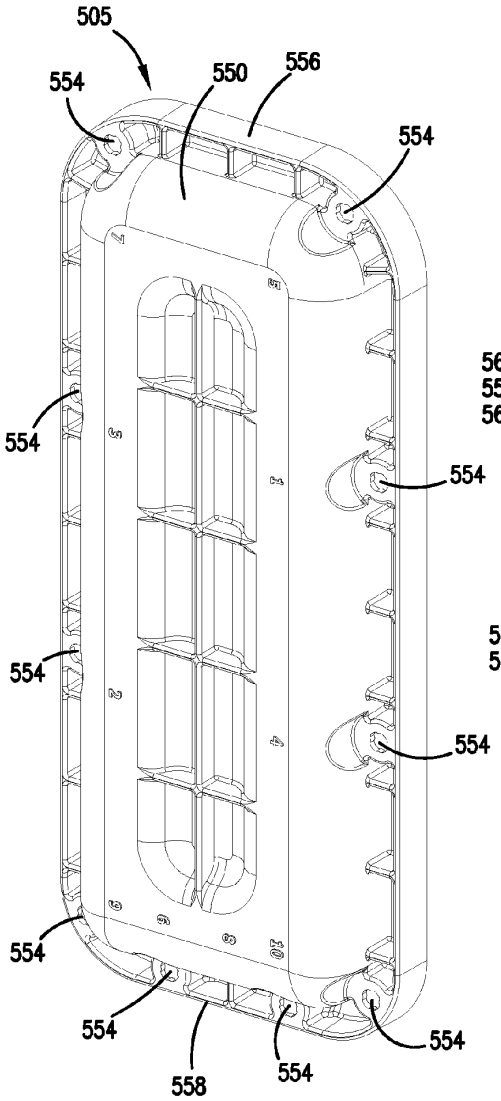
505
554
550
556
554
554
554
554
554
554
554
554
558
554

FIG.81

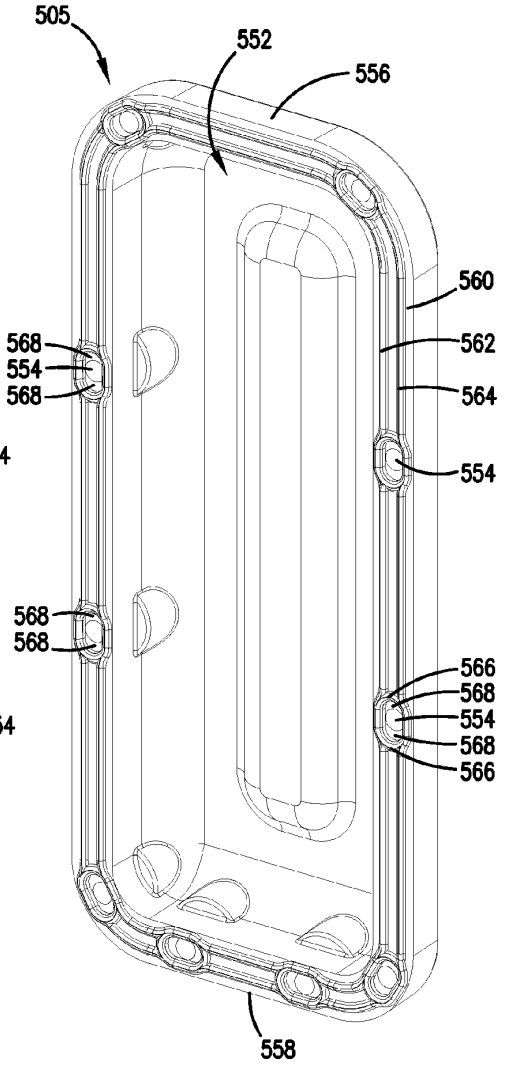
505
552
556
560
568
554
568
562
564
554
568
568
566
568
554
568
566
558

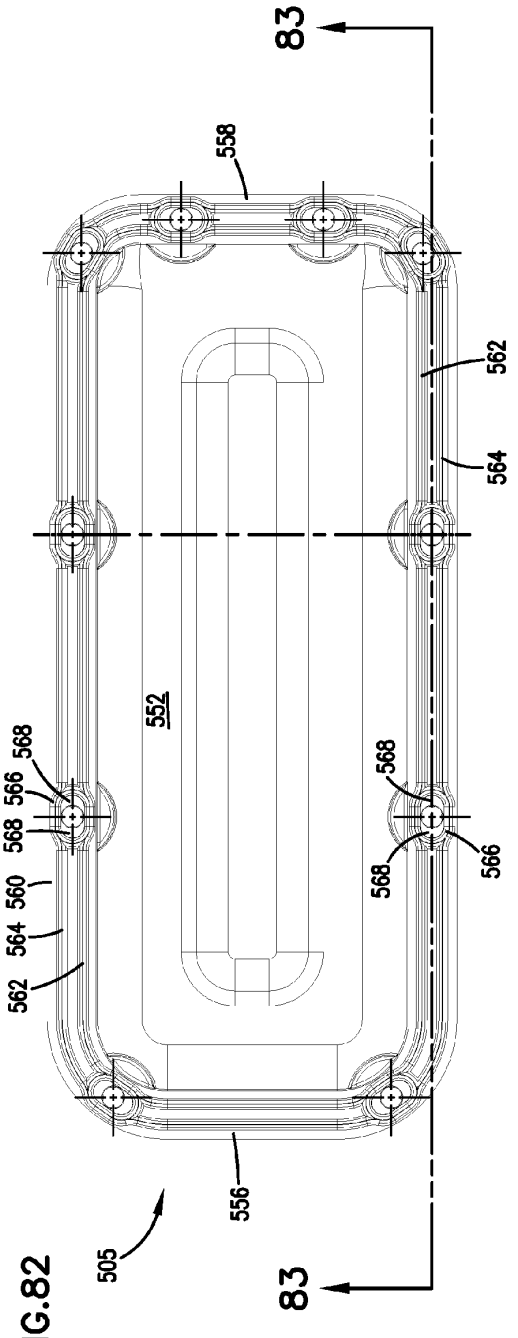
83
558
562
564
552
568
566
568
560
564
562
568
566
568
556
505
83

FIG.82

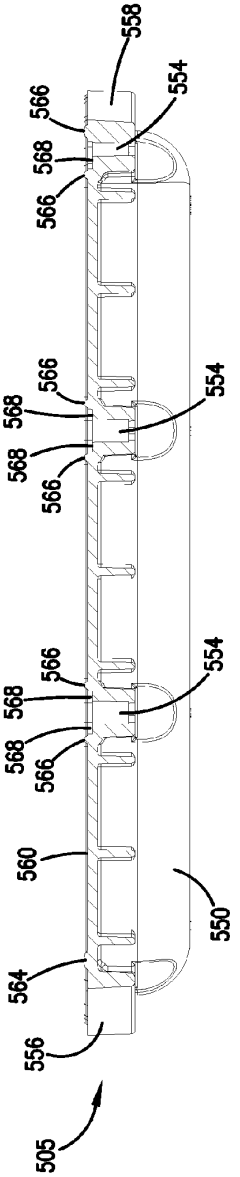
558
554
566
568
566
566
568
554
568
566
566
568
554
568
566
560
550
564
556
505

FIG.83

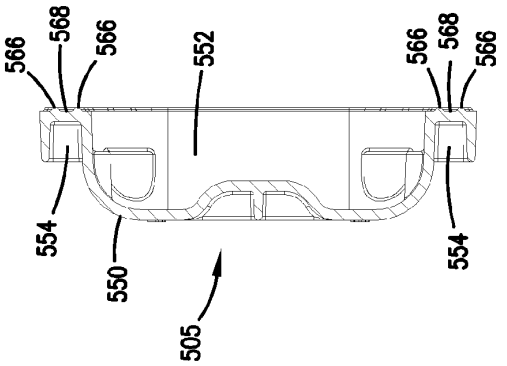
566
568
566
552
566
568
566
554
550
505
554

FIG.85

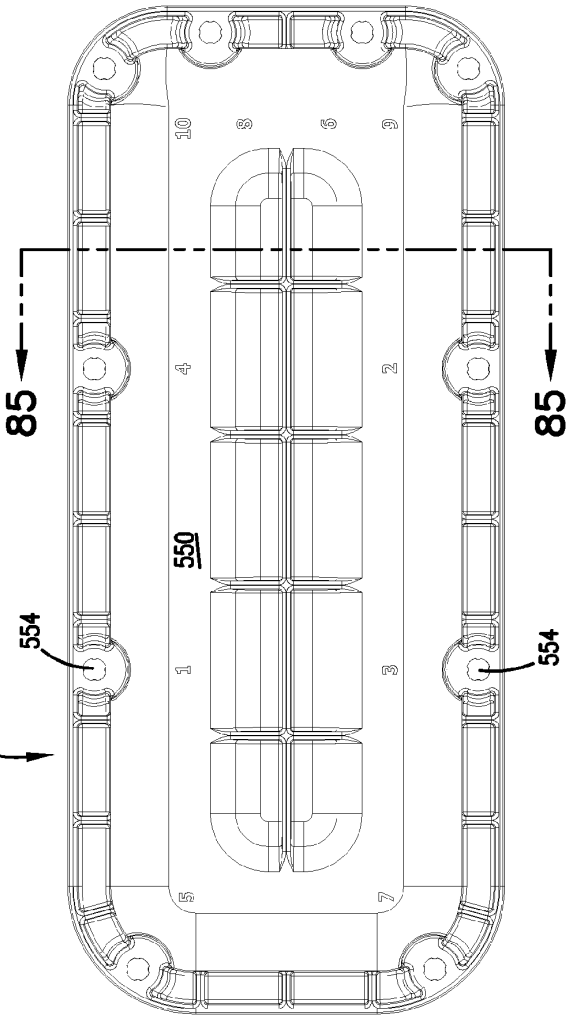
85
85
550
554
554
505
1
2
3
4
5
6
7
8
9
10

FIG.84

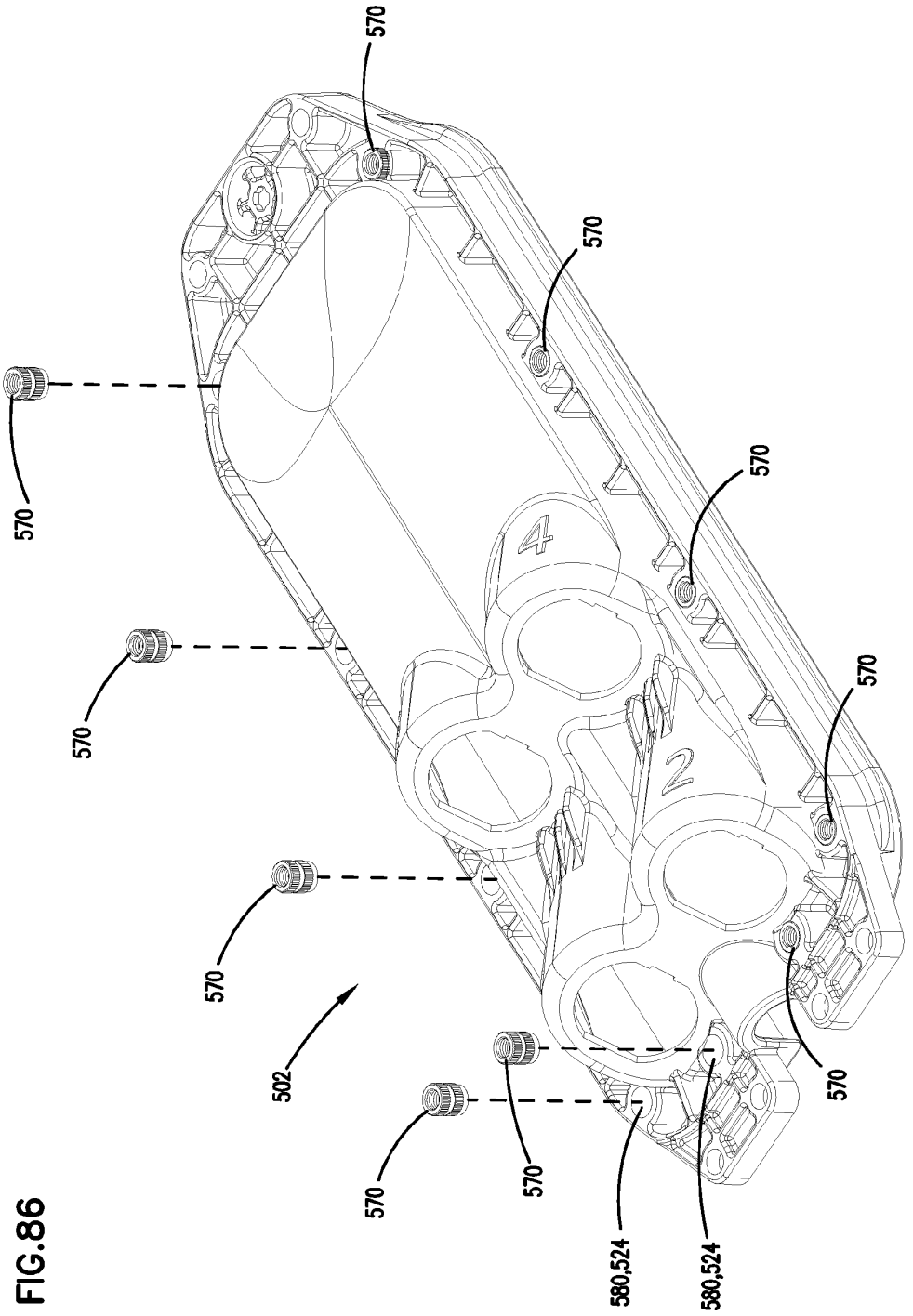

FIG.86

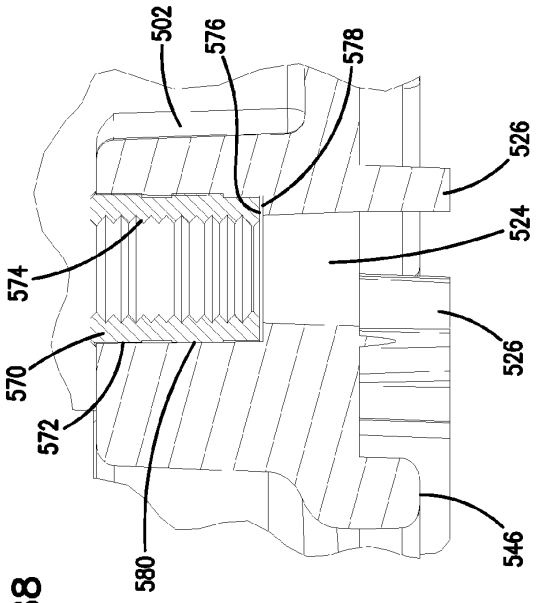
502
576
578
526
524
574
570
572
526
580
546

FIG.88

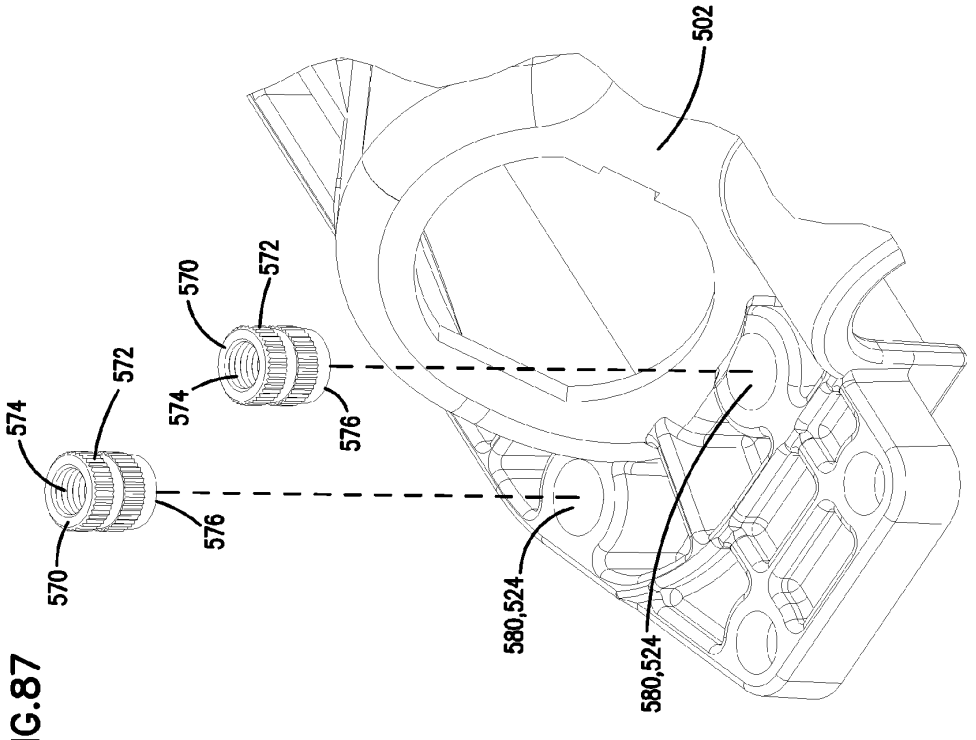
502
570
572
574
576
572
574
570
576
580,524
580,524

FIG.87

FIG.89

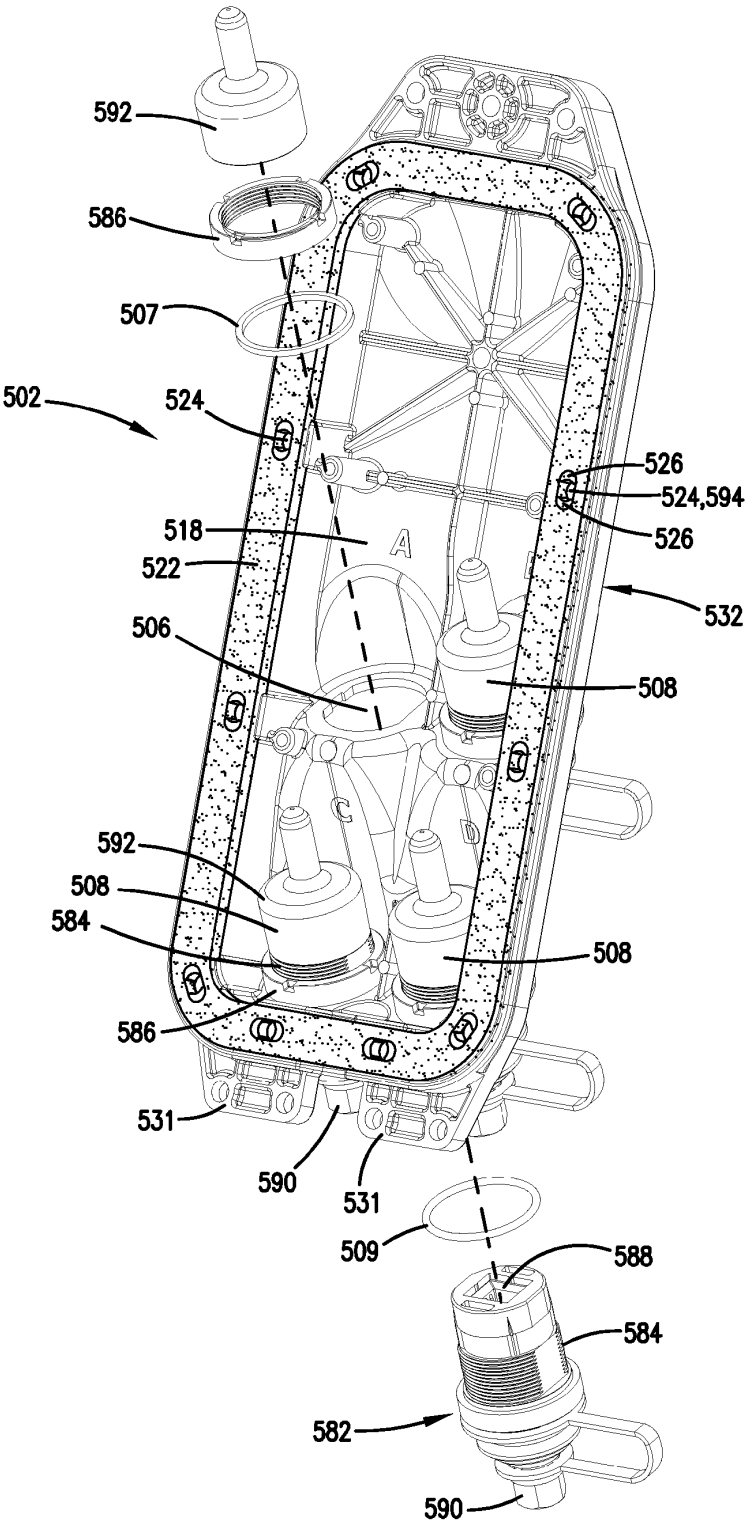
592
586
507
502
524
526
524,594
526
518
A
522
532
506
508
C
D
592
508
584
508
586
531
590
531
509
588
584
582
590

FIG.90

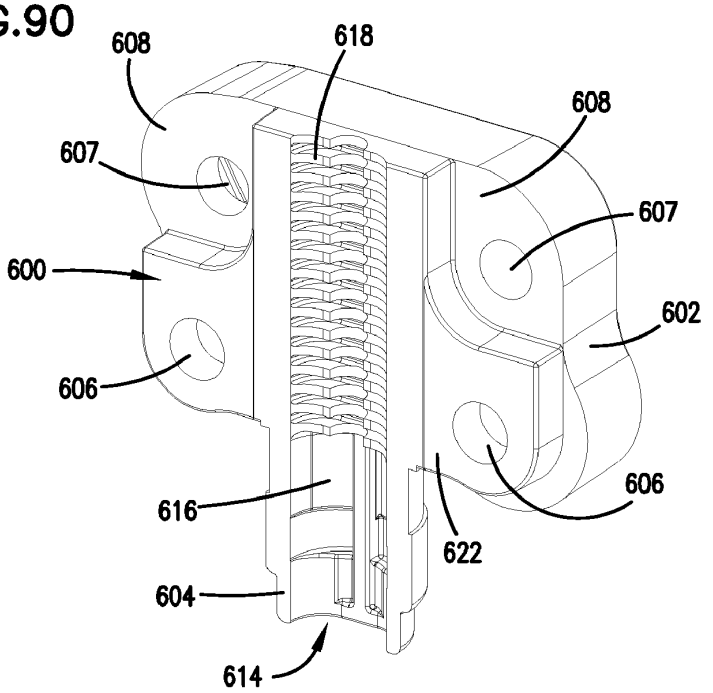
608
618
608
607
607
600
602
606
606
616
622
604
614

FIG.91

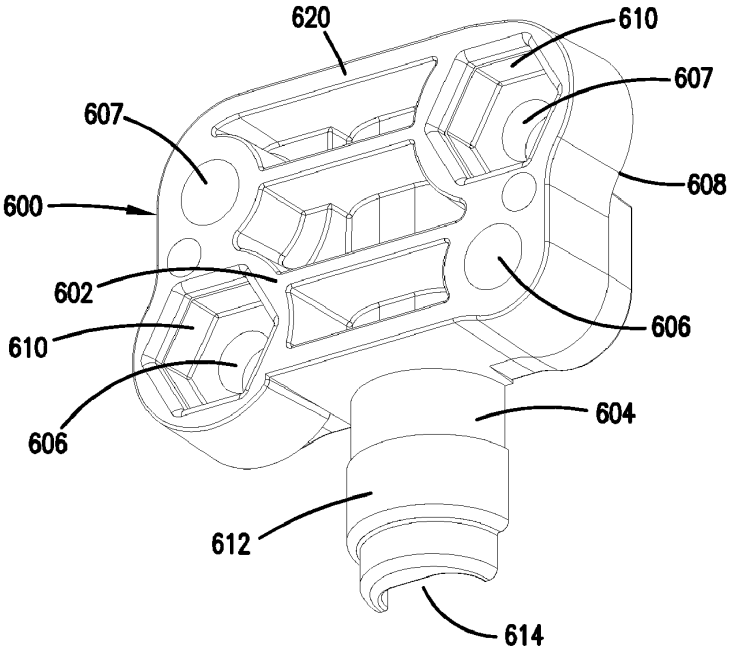
620
610
607
607
608
600
602
606
610
606
604
612
614

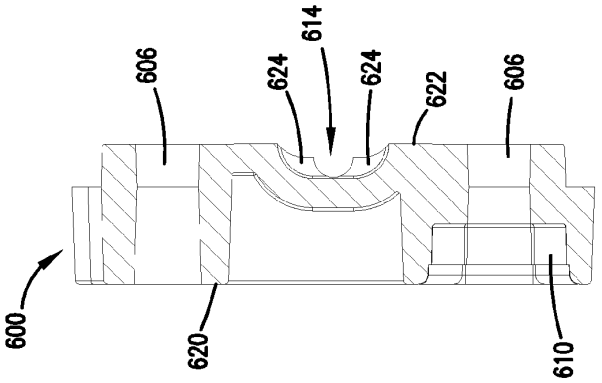

FIG.94

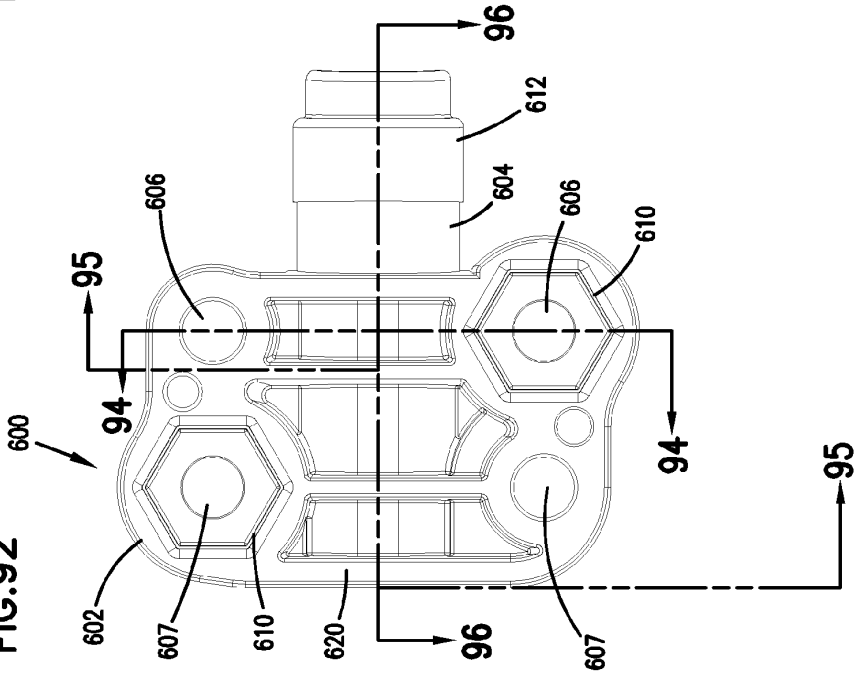

FIG.92

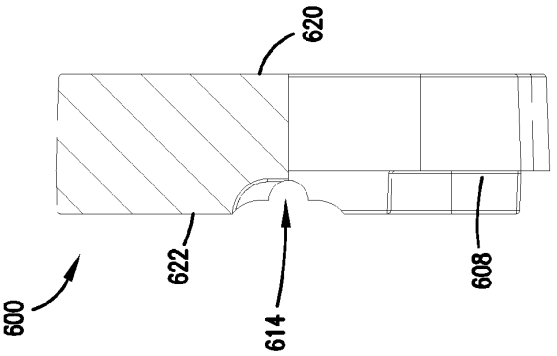

FIG.95

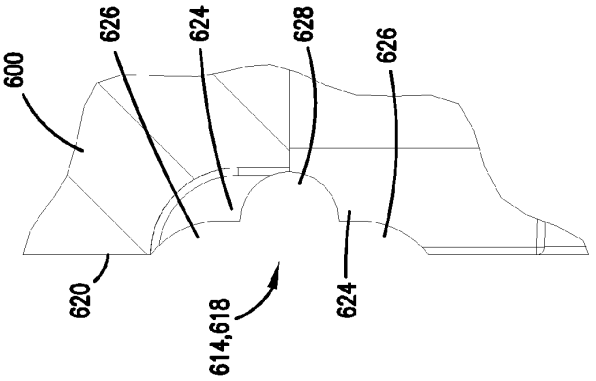

FIG.99

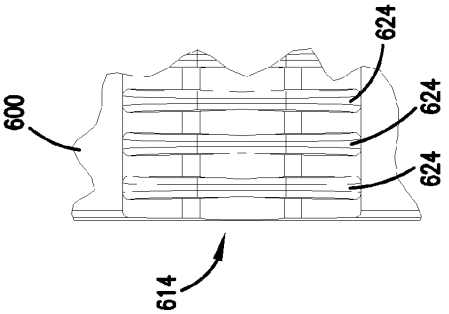

FIG.97

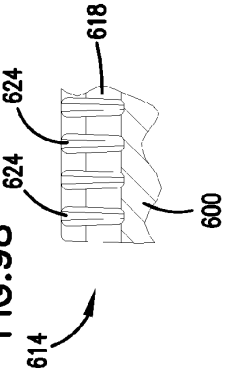

FIG.98

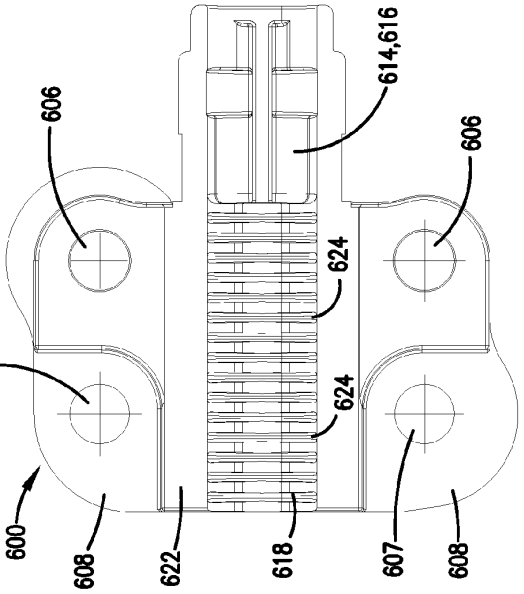

FIG.93

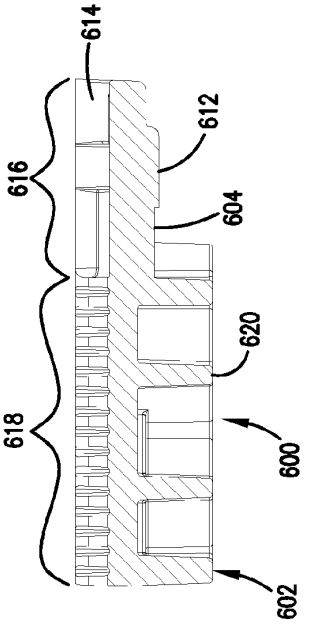

FIG.96

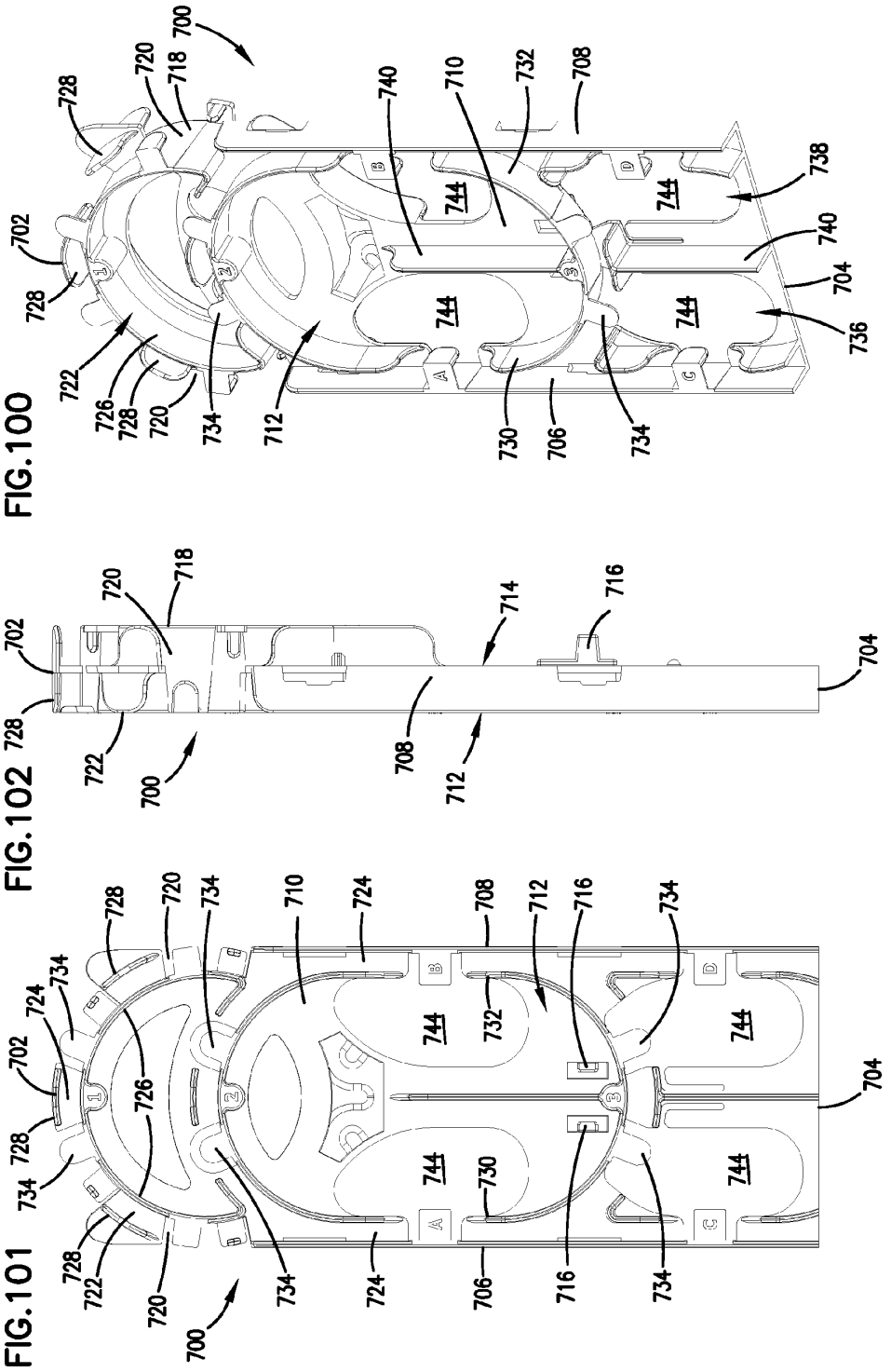
FIG.100
FIG.102
FIG.101
700
702
704
706
708
710
712
714
716
718
720
722
724
726
728
730
732
734
736
738
740
744

FIG.103

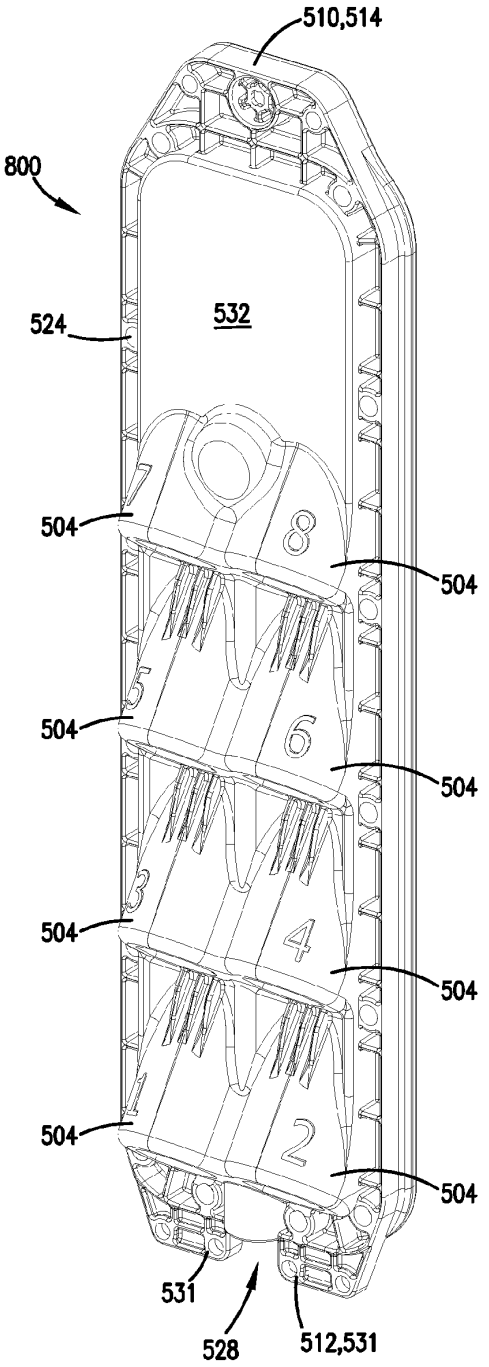

FIG.104

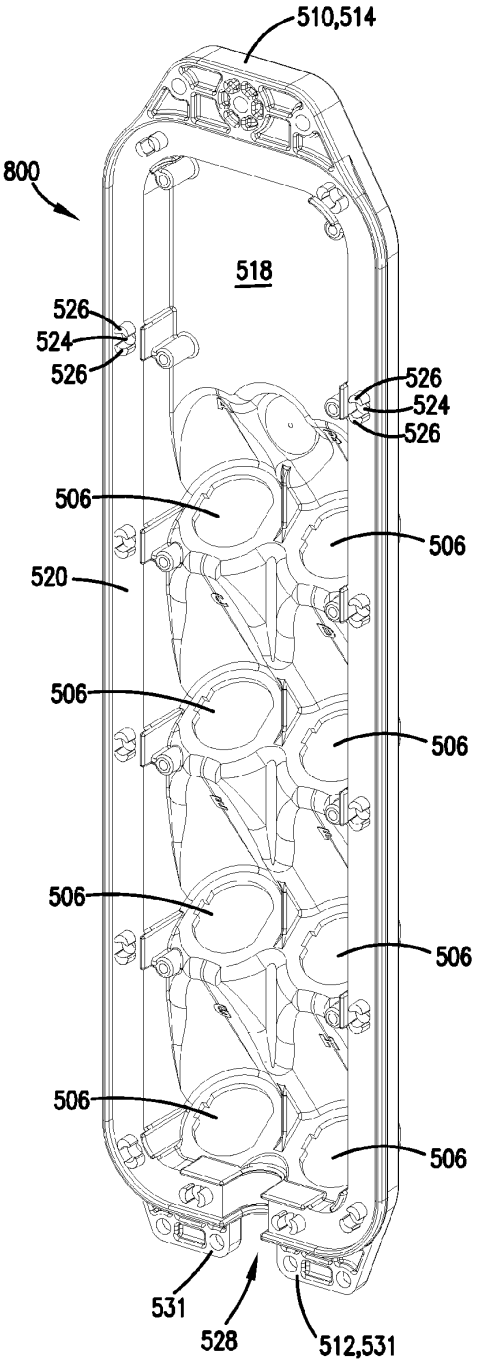

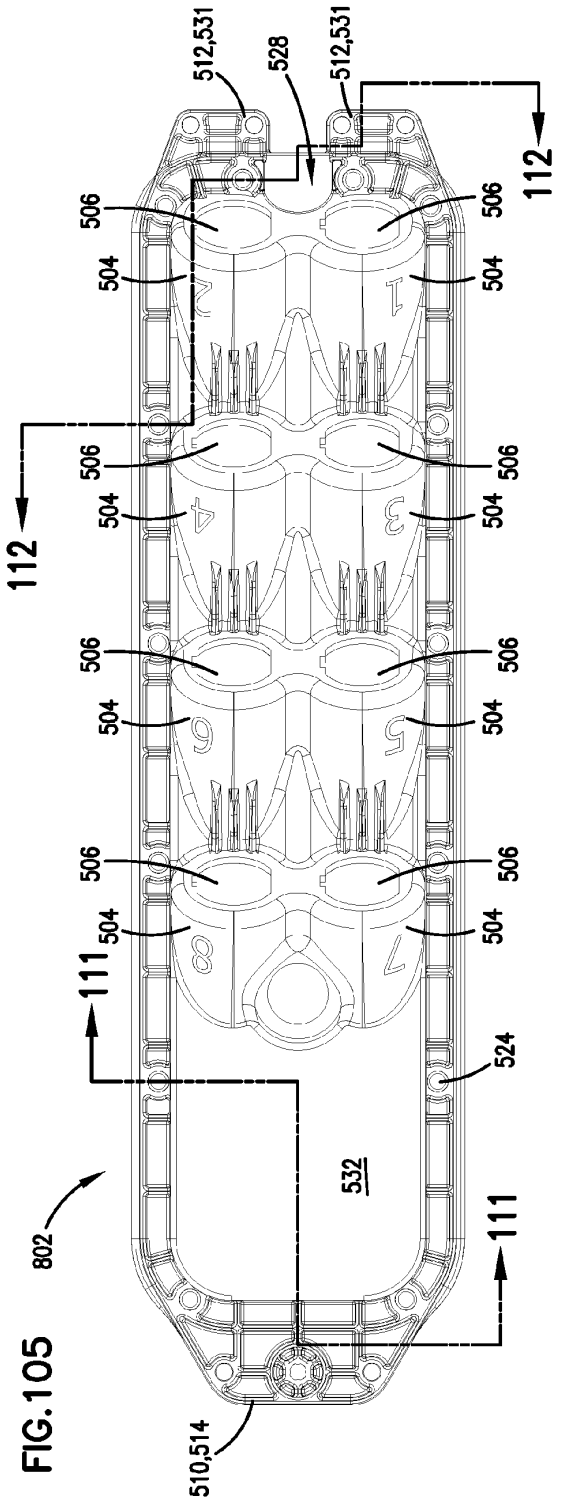

FIG.105

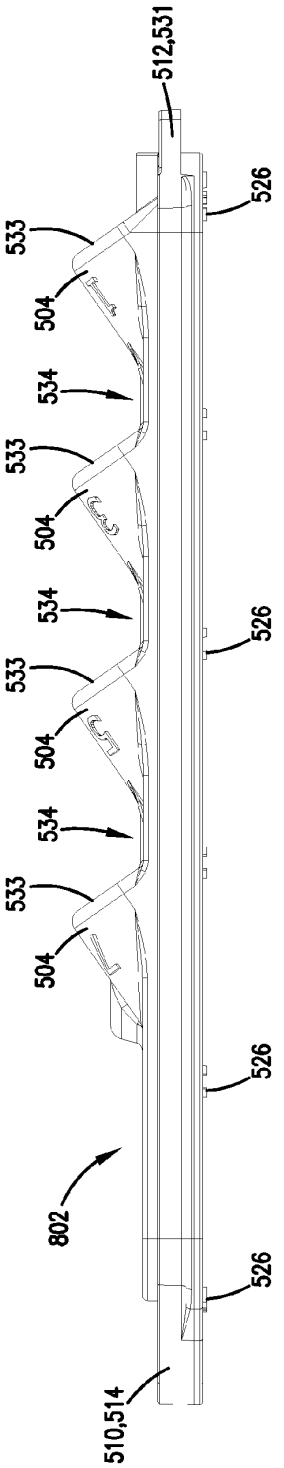

FIG.106

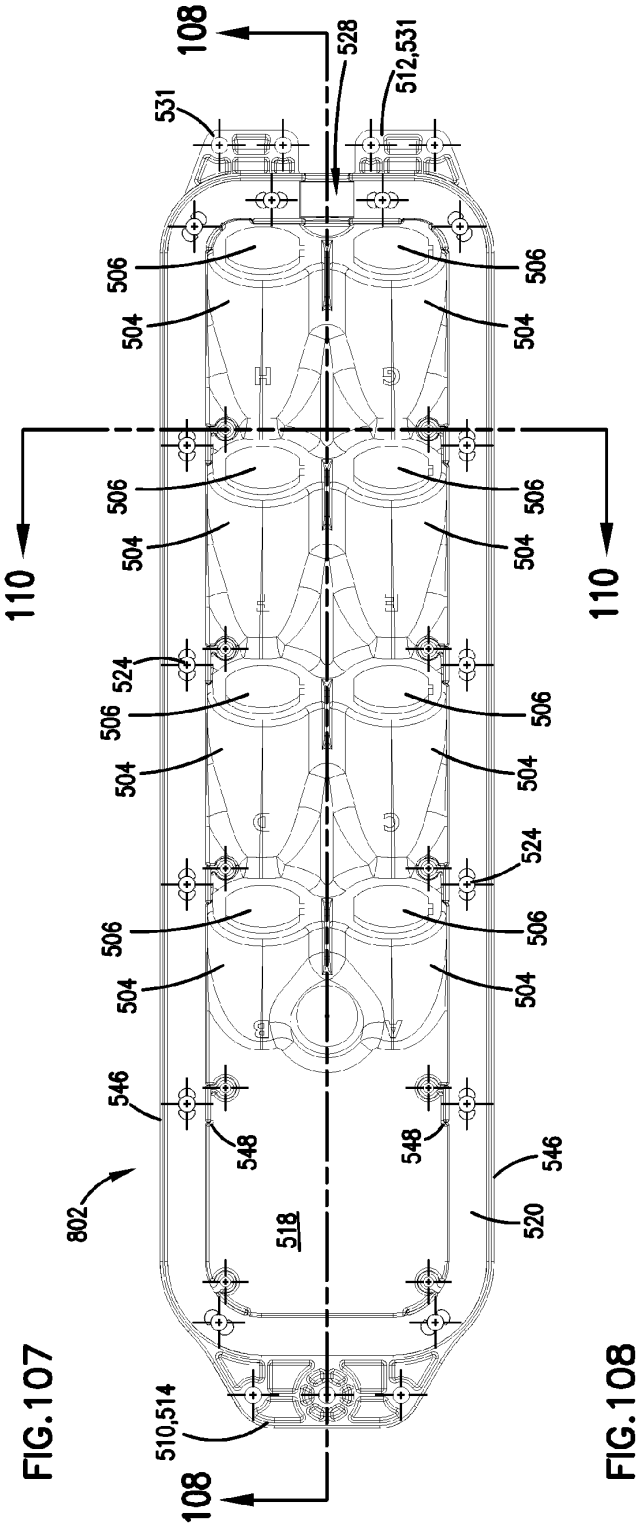

FIG.107

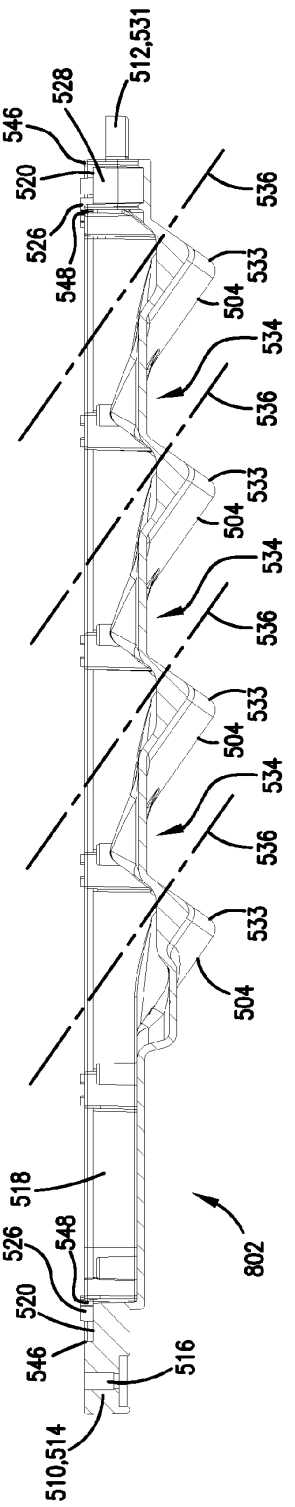

FIG.108

FIG.109

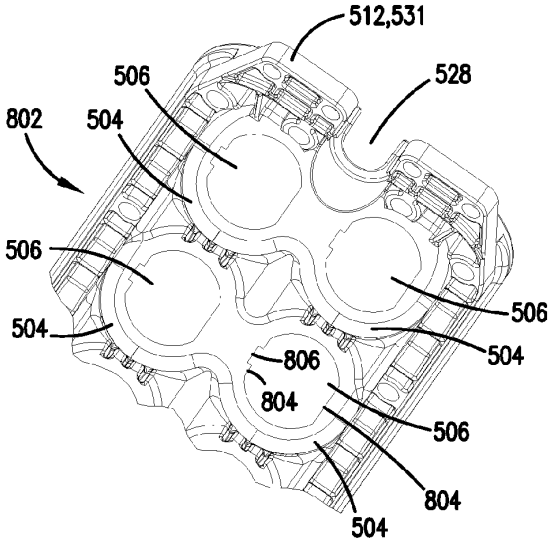

FIG.110

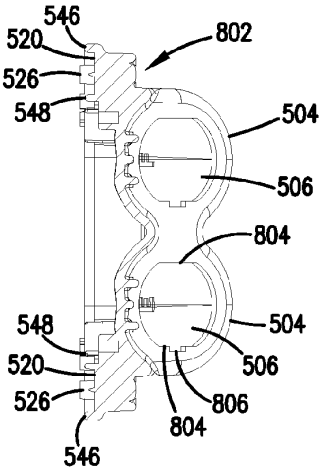

FIG.111

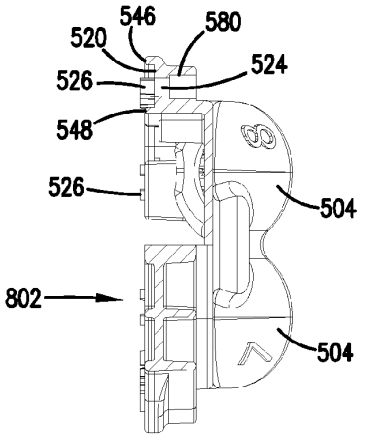

FIG.112

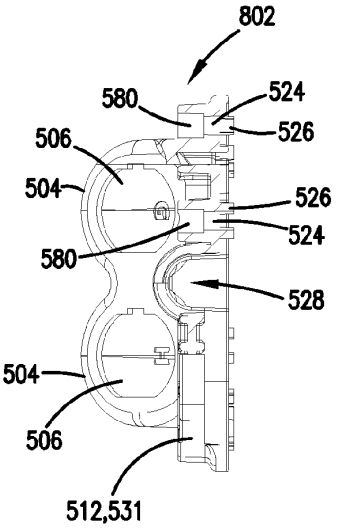

FIG.113

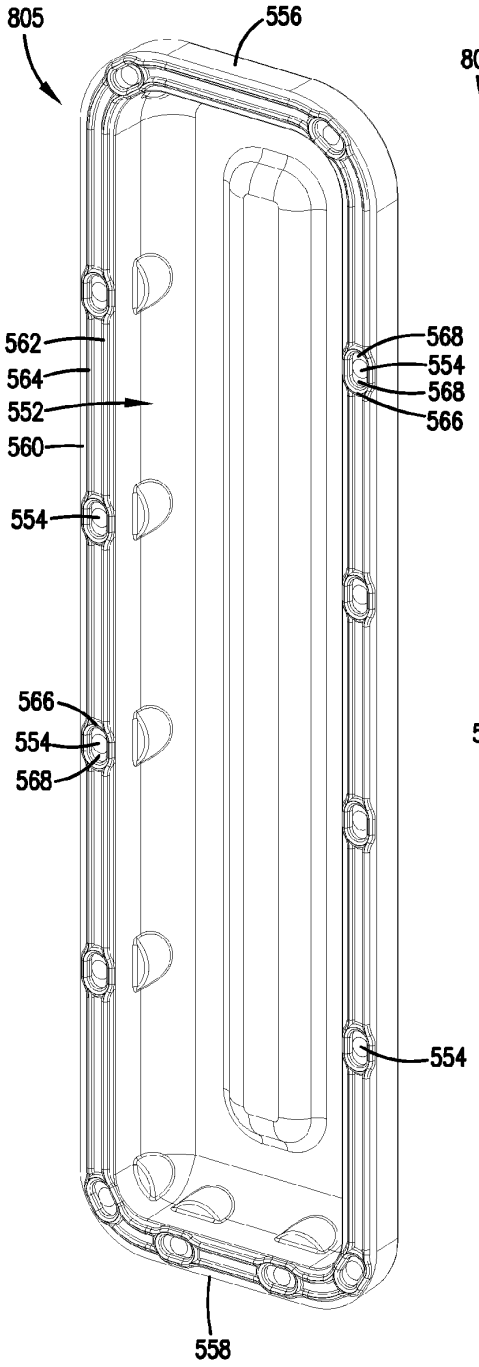

FIG.114

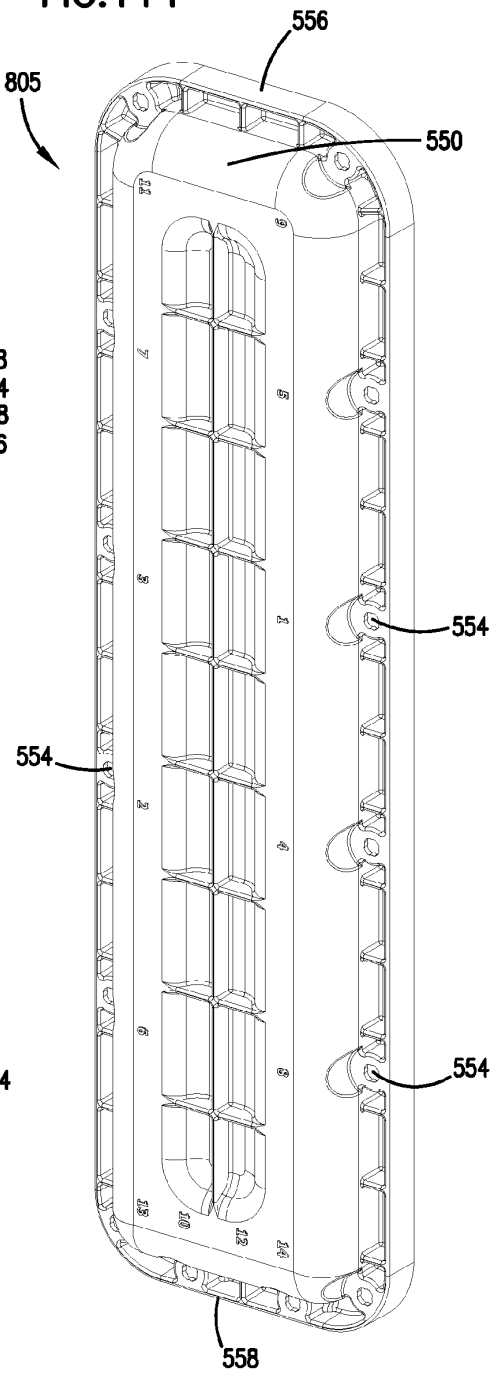

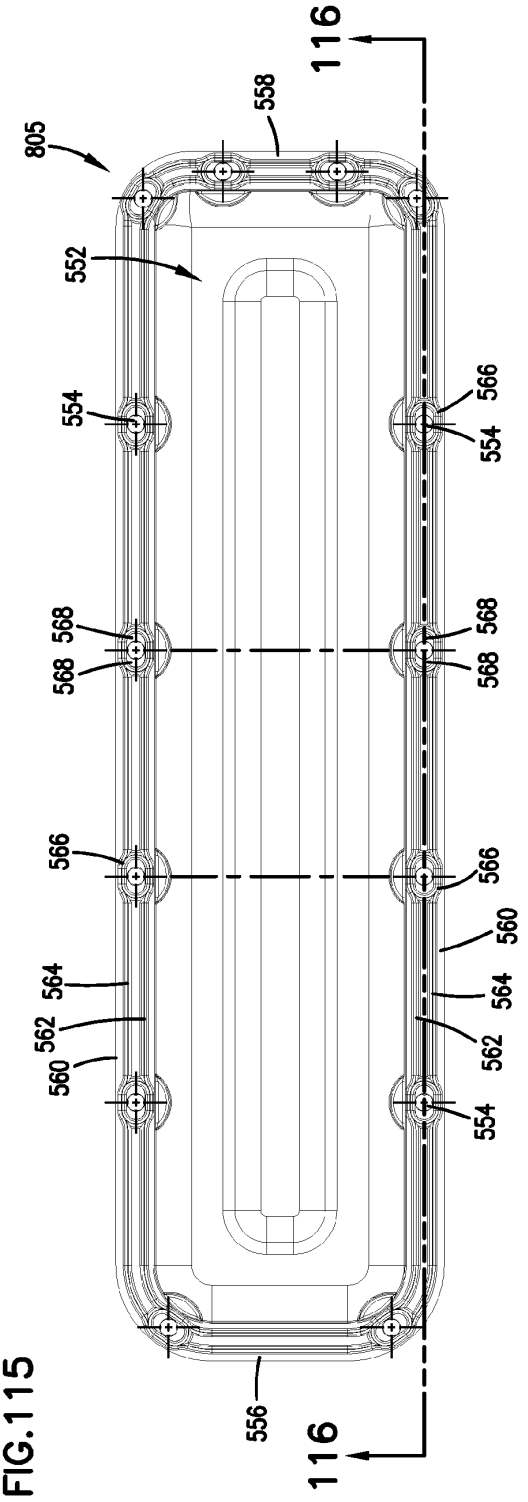

FIG.115

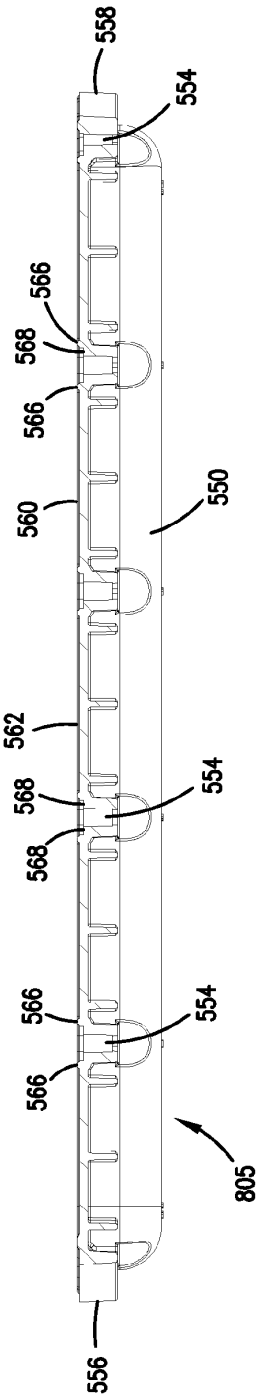

FIG.116

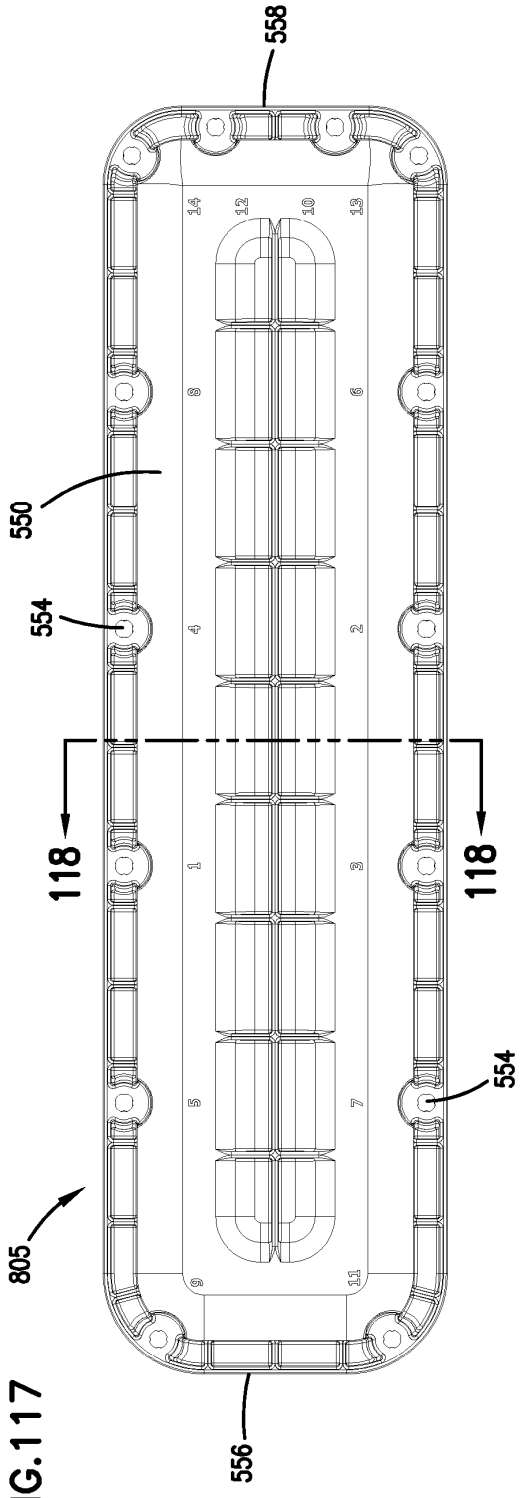

FIG.117

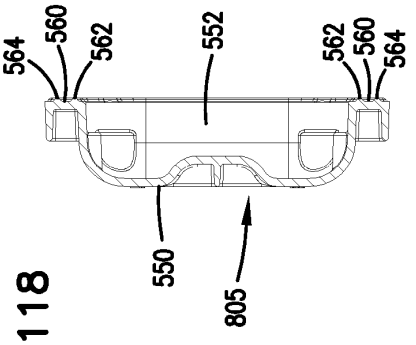

FIG.118

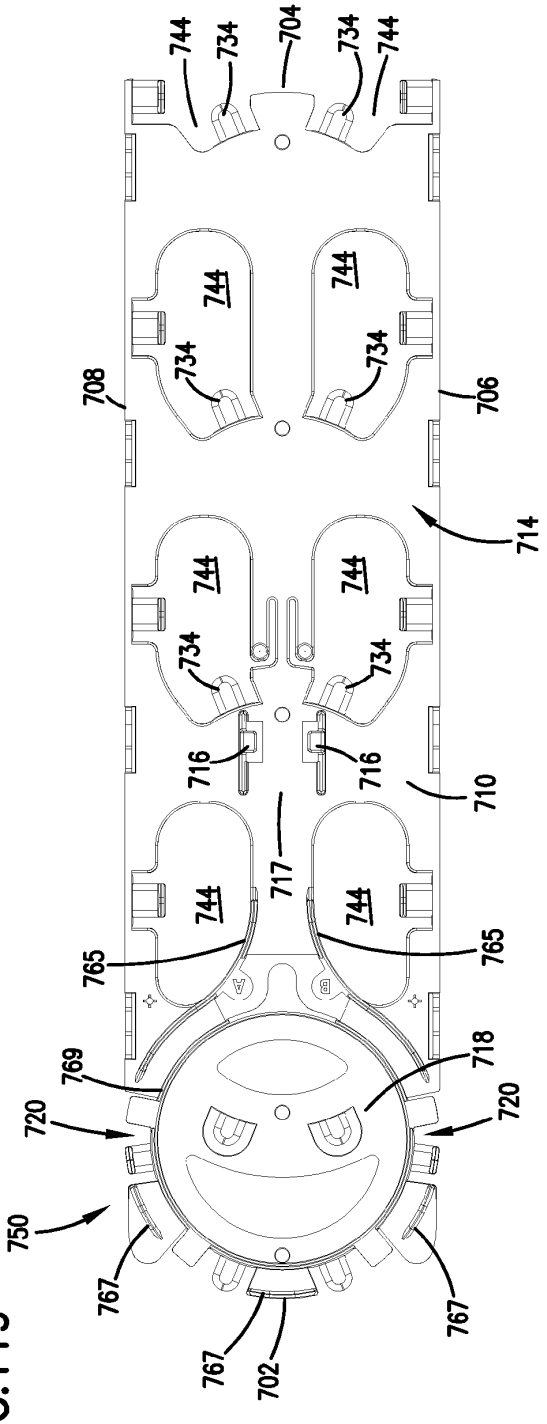

FIG.119

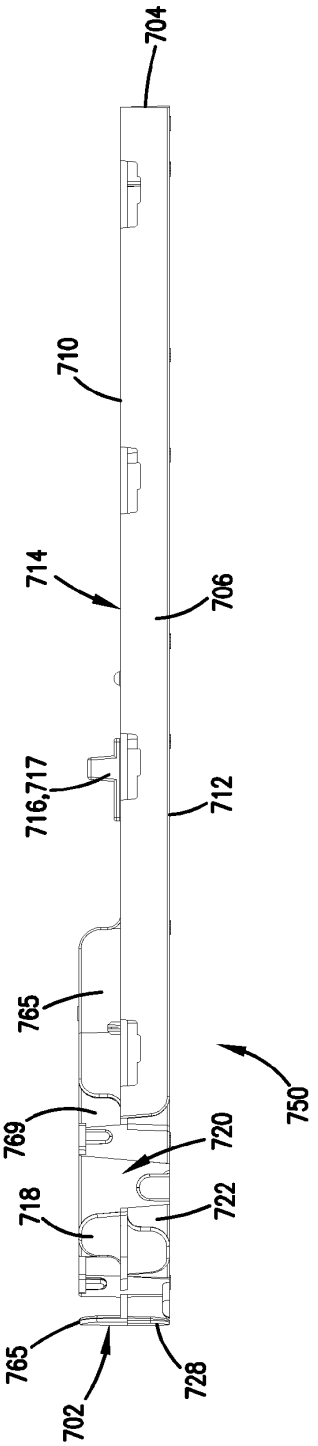

FIG.120

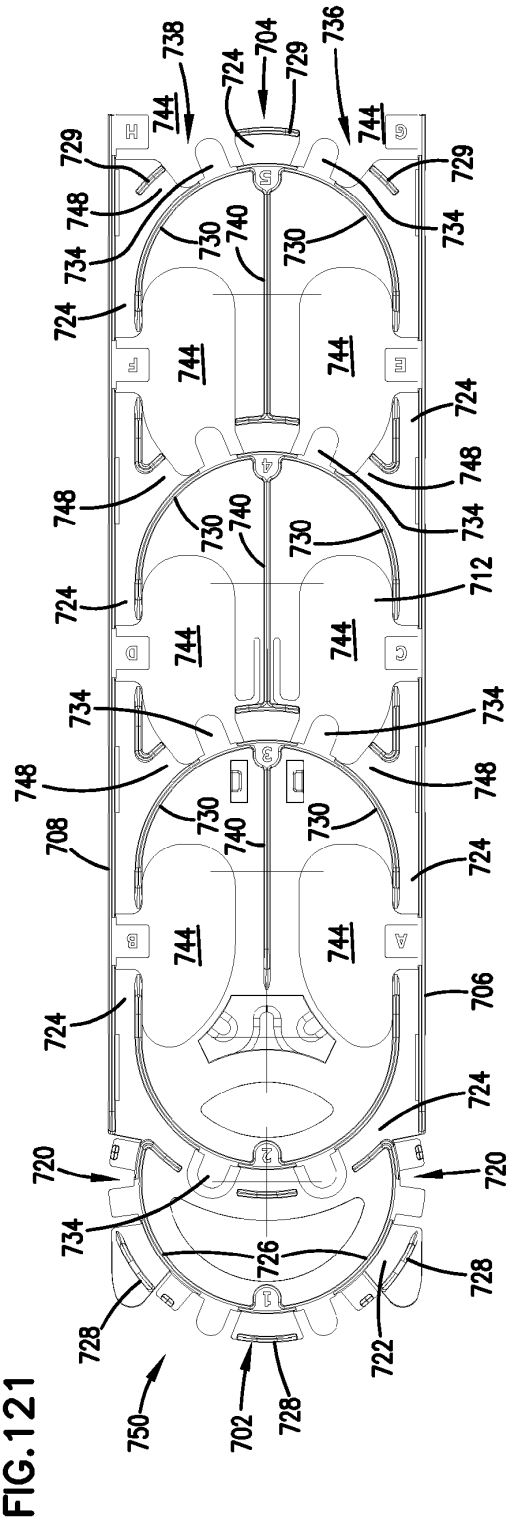

FIG.121

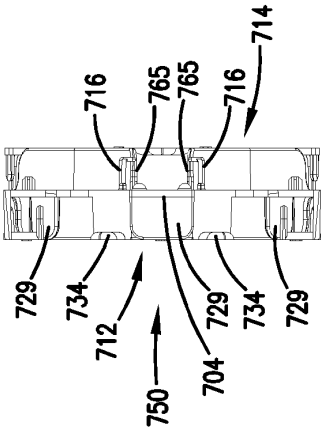

FIG.122

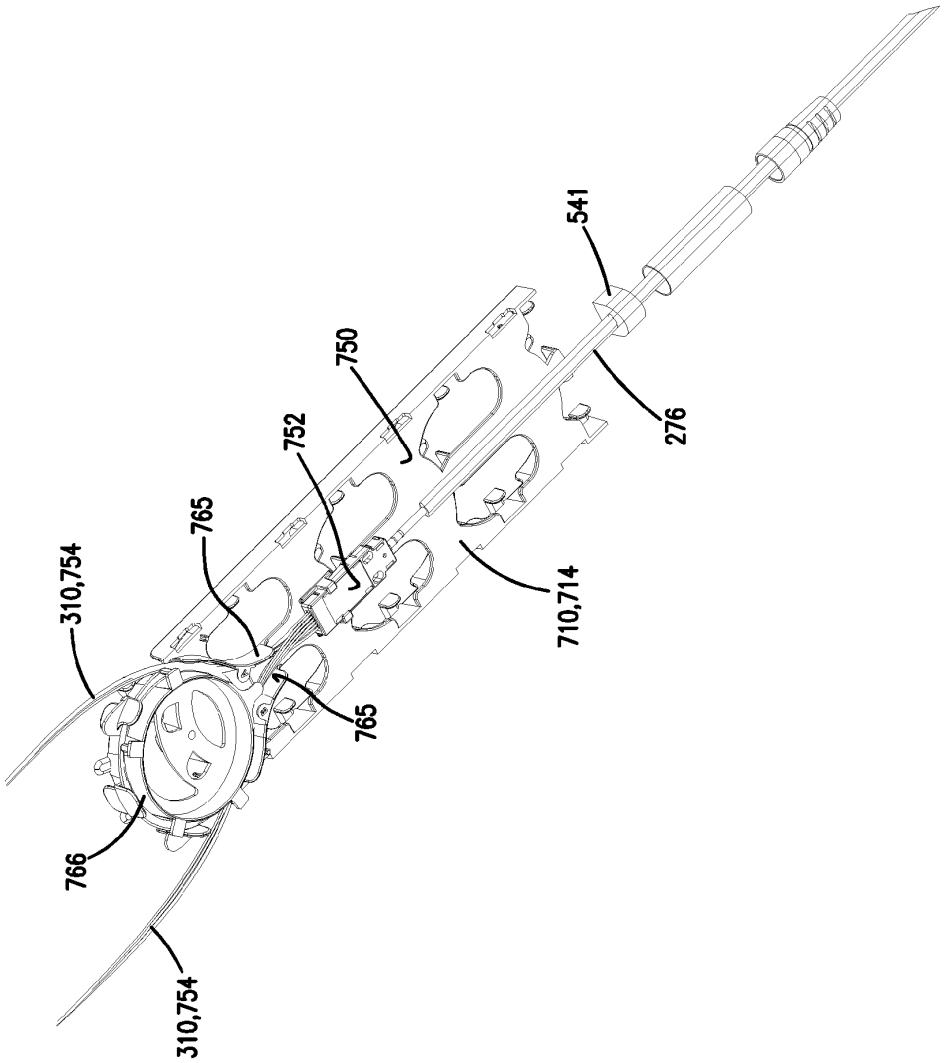

FIG.123

FIG.124

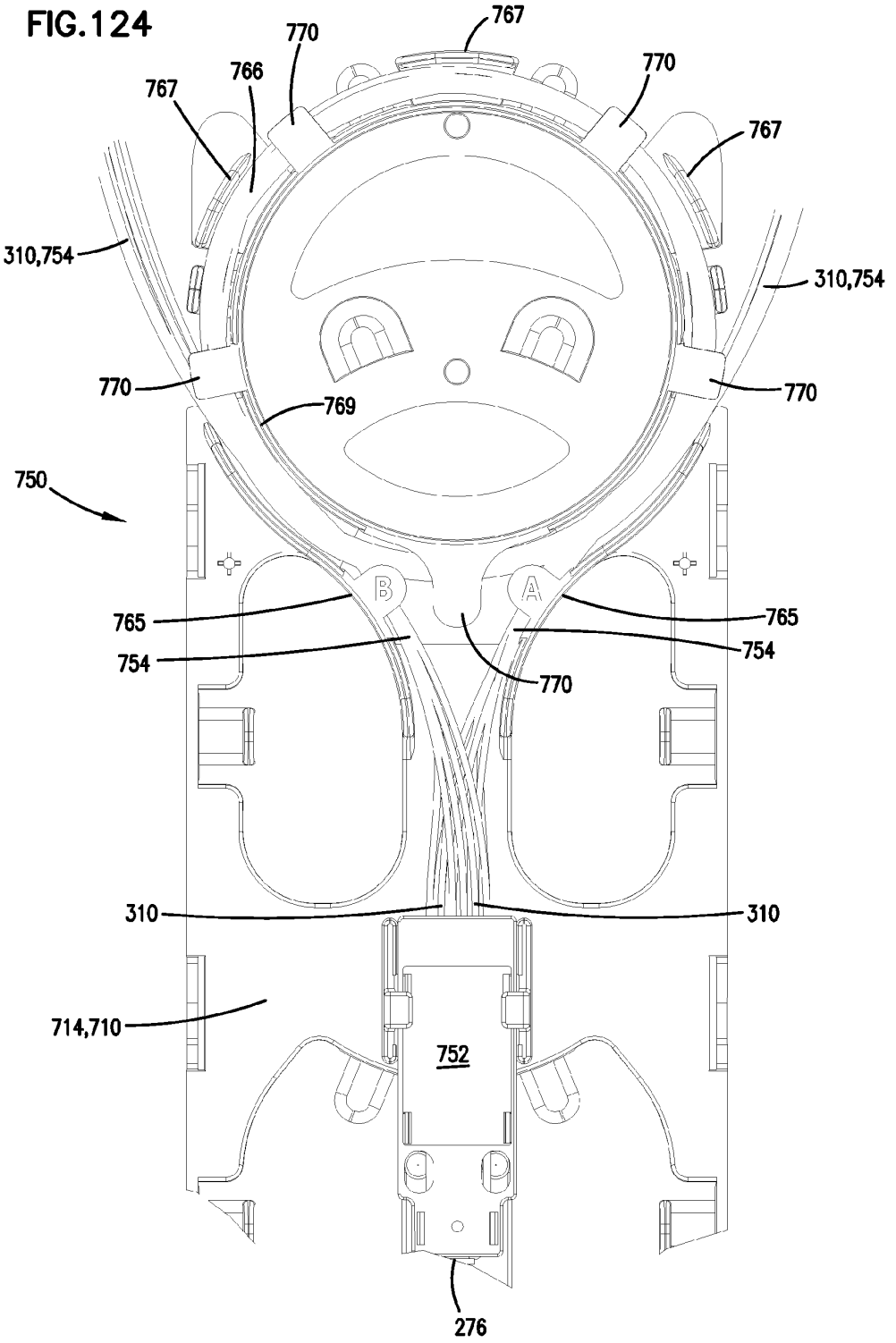
767
770
766
767
770
767
310,754
310,754
770
770
769
750
B
A
765
765
754
754
770
310
310
714,710
752
276

FIG.125

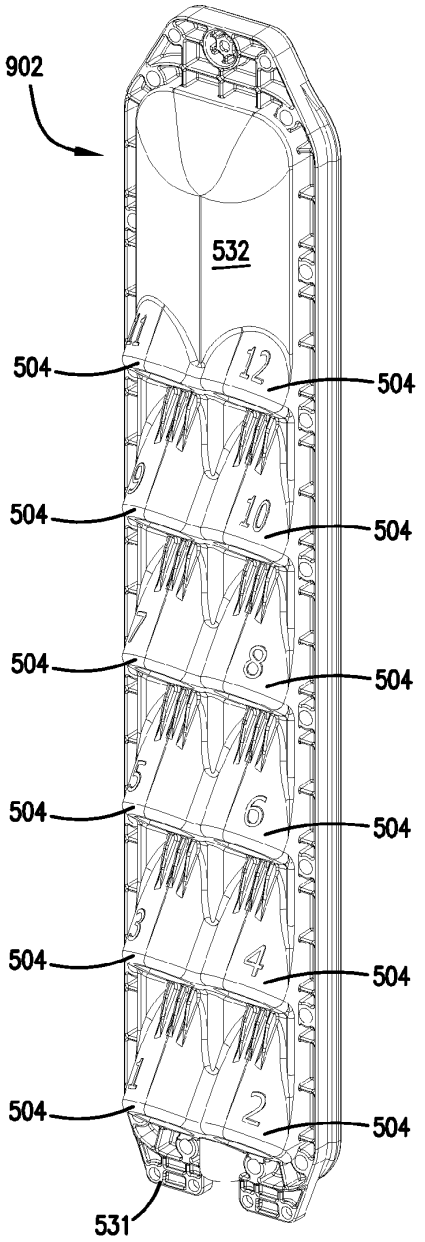

FIG.126

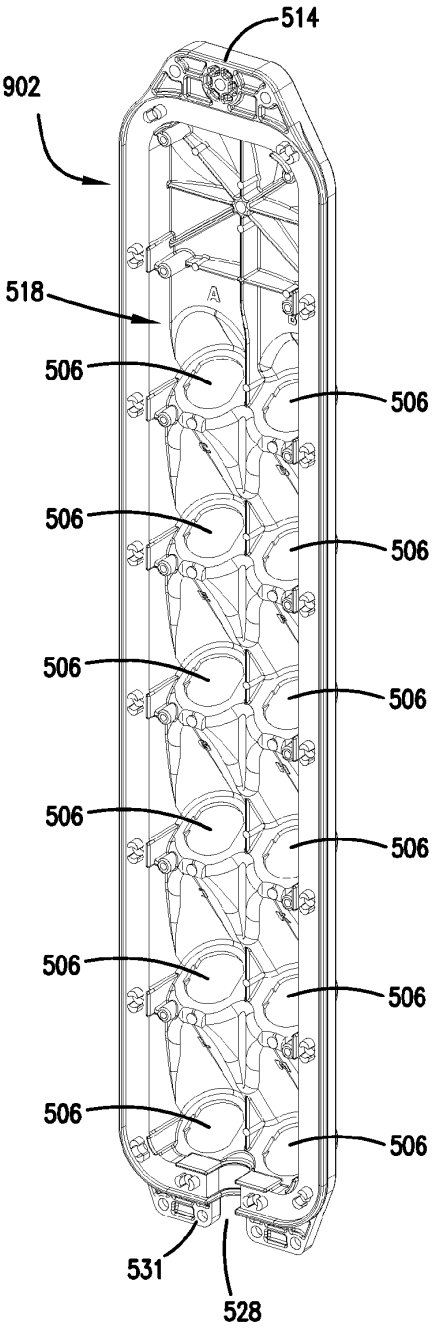

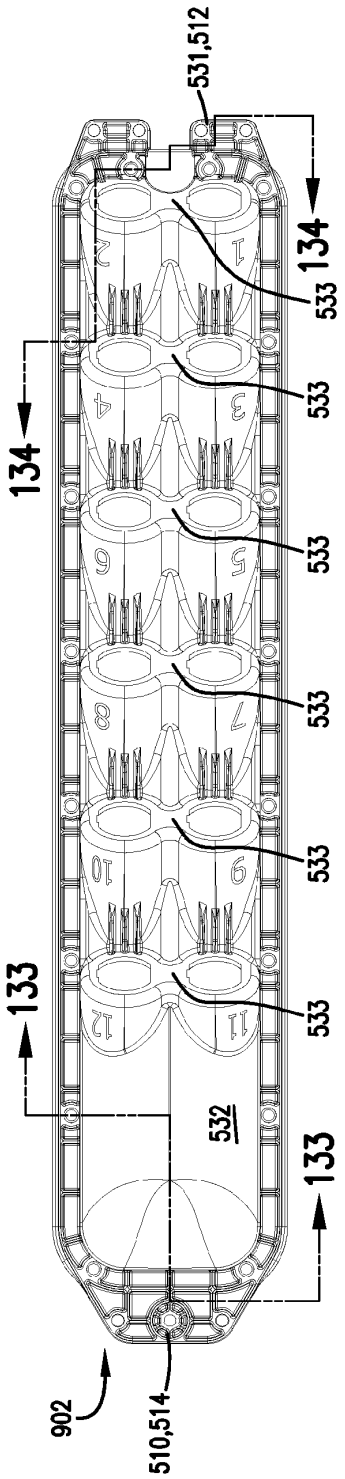

FIG.127

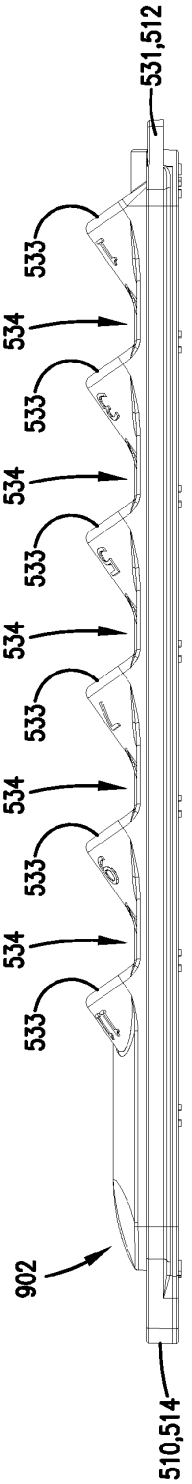

FIG.128

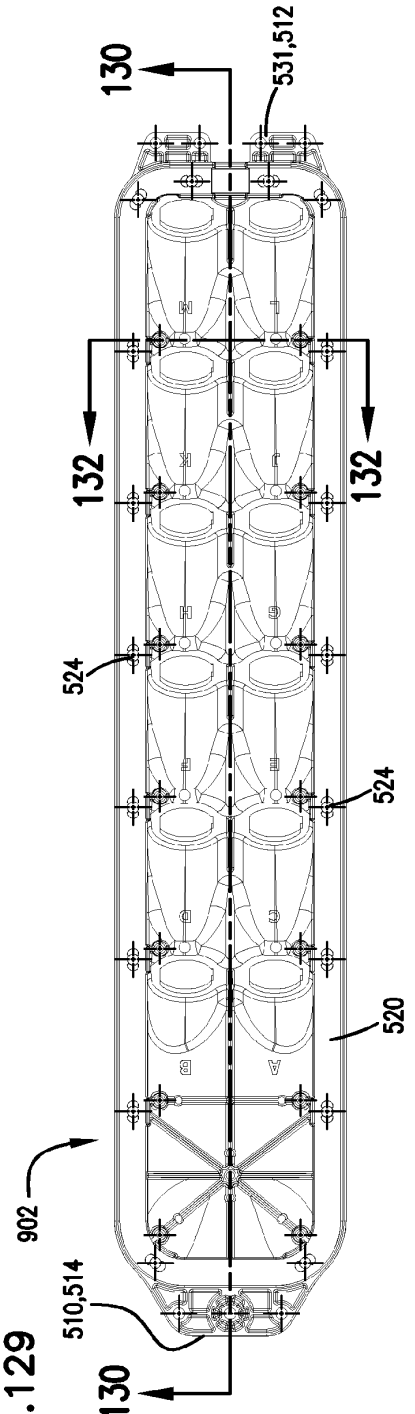

FIG.129

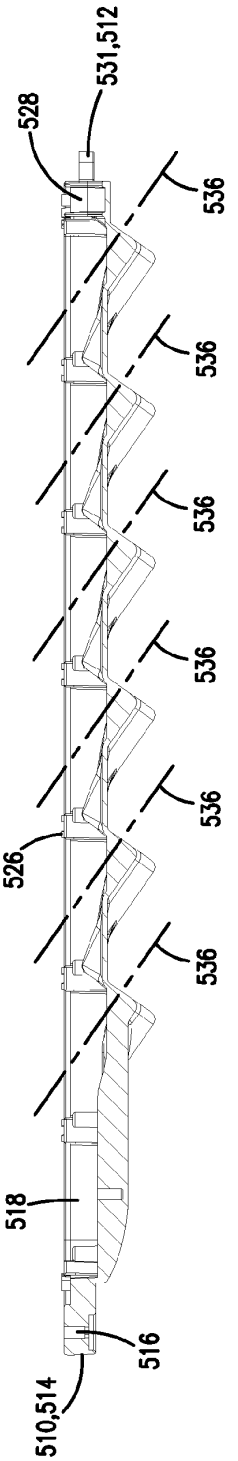

FIG.130

FIG.131

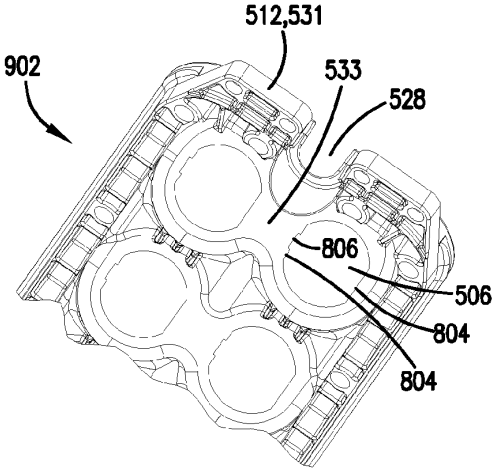

FIG.132

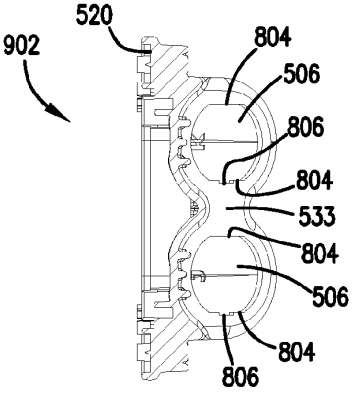

FIG.133

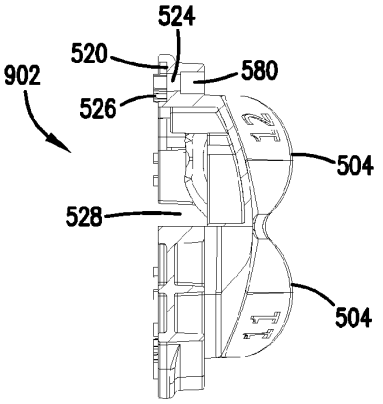

FIG.134

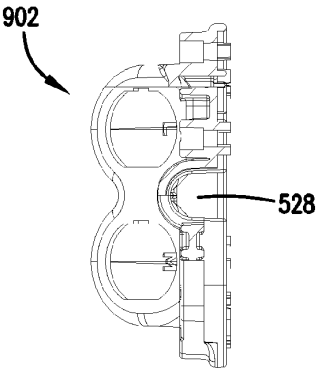

FIG.135

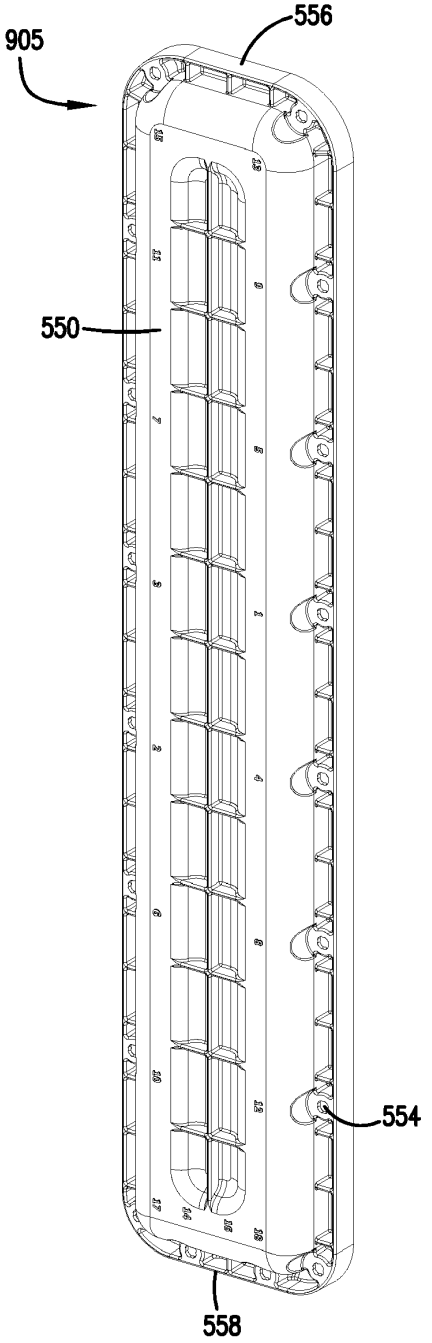

FIG.136

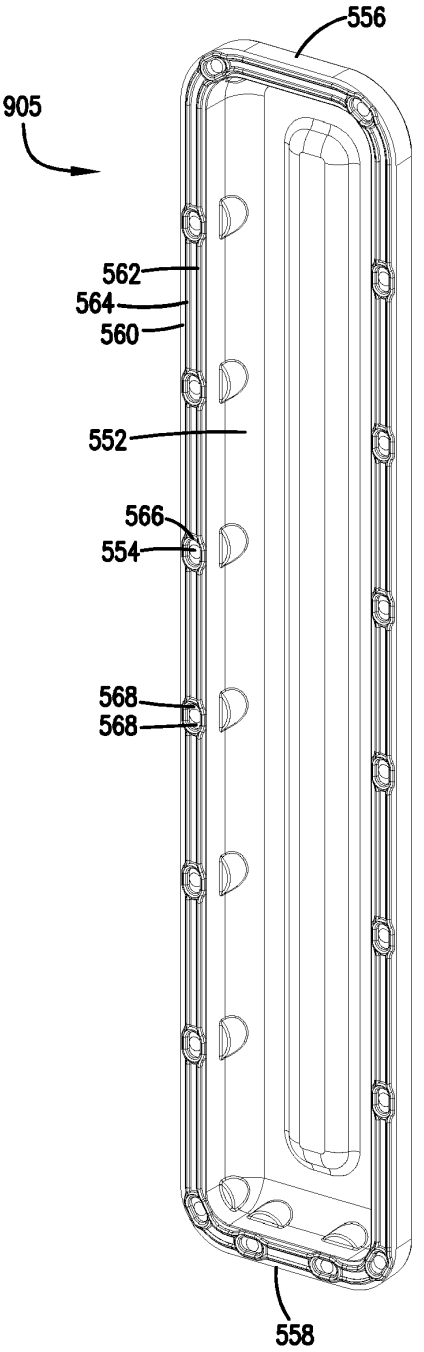

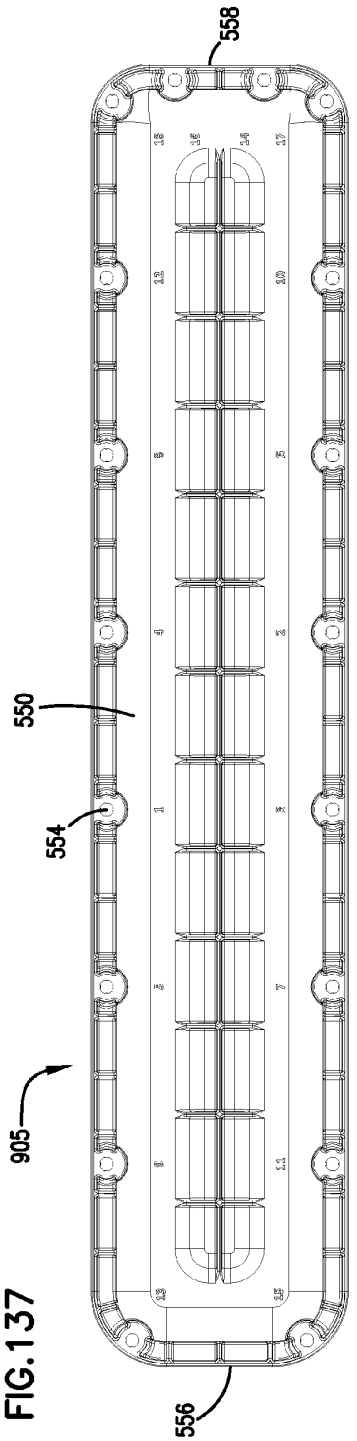

FIG.137

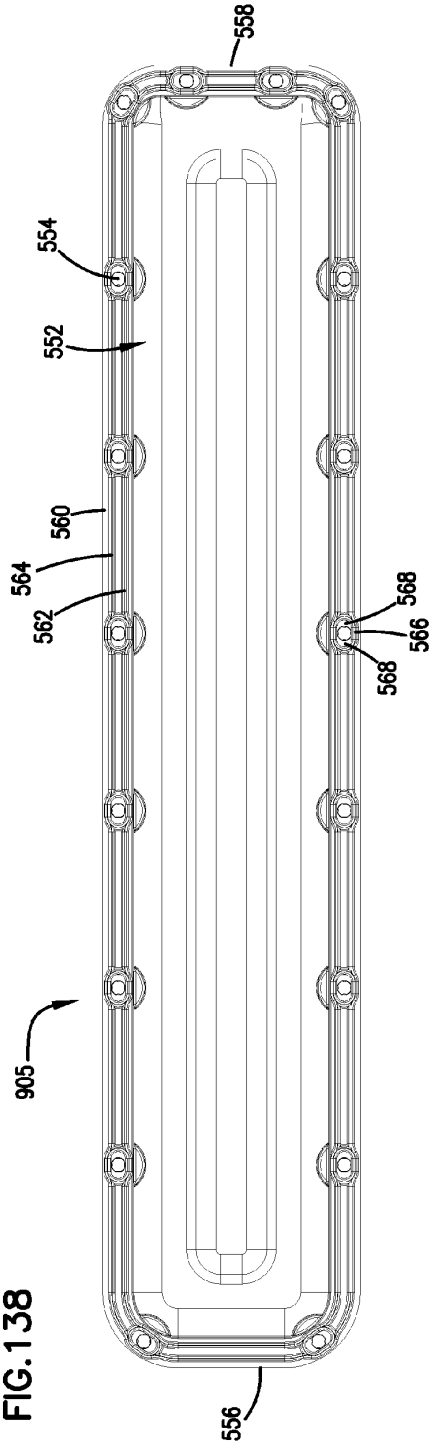

FIG.138

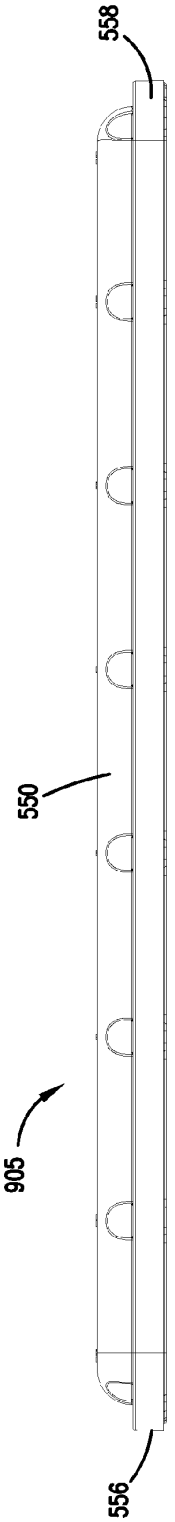

FIG.139

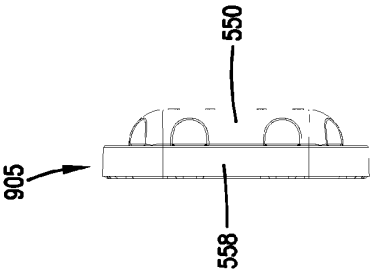

FIG.140

FIBER ACCESS TERMINAL

CROSS-REFERENCE TO RELATED APPLICATIONS

The present application a continuation of U.S. patent application Ser. No. 12/028,465, filed Feb. 8, 2008, which is a continuation of U.S. patent application Ser. No. 11/708,119, filed Feb. 15, 2007, which is a continuation of U.S. patent application Ser. No. 11/075,847 (now U.S. Pat. No. 7,292,763), filed Mar. 8, 2005, which application claims the benefit of U.S. Provisional Patent Application Ser. No. 60/551,164, filed Mar. 8, 2004 and U.S. Provisional Patent Application Ser. No. 60/600,129, filed Aug. 9, 2004, which applications are hereby incorporated by reference in their entirety.

BACKGROUND

Expansion of fiber optic based telecommunication service is being expended to greater diversity of businesses and homes. Many of these extensions of service within neighborhoods, industrial parks and business developments utilize optical fiber distribution cables laid within buried conduit. Such optical fiber distribution cables might extend from a larger fiber distribution terminal or pedestal to a smaller fiber access terminal directly adjacent the business or home to which service may be provided. From the fiber access terminal to the home or business, a fiber drop cable may connect to the home or business.

A fiber distribution terminal may be configured to receive fibers from a central office and contain a number of splitters. Each of the fibers from the central office may carry a large number of signals and the splitters separate the compound signals into individual circuits. These individual circuits are then transmitted through individual optical fibers. Each of the fibers from the main office may enter one of the splitters in the fiber distribution terminal and the splitter may direct each of these signals into up to thirty-two fibers. A typical fiber distribution terminal may be configured to support from 100 fibers up to 1500 fibers. The smaller fiber access terminals may more typically house up to 8 or 12 fibers. The fiber distribution cables between the fiber distribution terminal and the fiber access terminal may have these eight to twelve fibers bundled together in a single multi-strand cable. Within the fiber access terminal, these multiple strands are broken out of the multistrand cable so that each fiber may be directed to an individual customer.

Currently, when fiber optic cables are extended from a fiber distribution terminal to a fiber access terminal, a variety of techniques are available for pulling and/or pushing the cable through the conduit. However, such cables must then be terminated and connectorized at the fiber access terminal. Termination and connectorizing is preferable performed in an environmentally stable and protected environment, such as a factory. Contamination of the fiber, the fiber end face or the junctions between fibers can degrade or inhibit communication with the customer.

Improvements to current fiber distribution cables and fiber access terminals are desirable.

SUMMARY

The present invention relates to a fiber access terminal assembly with a fiber optic distribution cable, and a fiber enclosure at one end of the fiber optic distribution cable. The fiber enclosure is configured to be inserted through a hollow conduit with a top end positioned in a direction of insertion

into the conduit. The fiber enclosure includes a terminal body and a removable cover which cooperate to define an interior, the top end and a base end. The base end of the fiber enclosure includes a first opening through which the fiber optic distribution cable enters the interior of the fiber enclosure. The fiber optic distribution cable includes a plurality of optical fiber strands. Optical fiber strands from the distribution cable are separated within the interior of the enclosure and terminated with fiber optic connectors.

The terminal body includes a plurality of fiber optic adapters extending through the terminal body. Each of the adapters has a first end within the interior configured to receive one of the connectors of the optical fiber strands, and a second end outside the interior of the enclosure. The second ends are configured to receive a connector of an optical fiber drop cable extending to an exterior of the fiber enclosure and extend generally in the direction of the fiber optic distribution cable. The interior includes a cable slack storage arrangement for storing excess cable length of any of the optical fiber strands between the fiber optic distribution cable and the first end of an adapter. The cable slack storage arrangement also provides bend radius protection for the optical fiber strands stored within the cable slack storage arrangement.

The present invention further relates to a method of assembling a fiber access terminal to the end of a fiber distribution cable. The terminal includes an enclosure defined by a housing and a cover. In an environmentally protected location, a fiber optic distribution cable is extended through a first opening in the housing into the interior of the housing and secured to a strain relief. A plurality of optical fiber strands are separated from the fiber optic distribution cable within the interior of the enclosure body. Each of the optical fiber strands are terminated with a fiber optic connector within the interior of the enclosure body. The optical fiber strands within the interior of the housing are extended about a cable slack storage arrangement within the interior. The fiber optic connectors are connected to one of a plurality of mating fiber optic adapters. The fiber optic adapters extend through the housing from the interior to outside the housing and include a second end outside the housing for connecting with a mating fiber optic connector. The second end is configured to receive a fiber optic drop cable extending from generally the same direction as the fiber optic distribution cable. The cover is positioned to close off an open side of the housing and the interior to form the fiber enclosure and the fiber enclosure is configured to pass through a buried conduit.

The present invention also relates to a fiber access terminal assembly including a fiber optic distribution cable with a first end and a second end, a fiber enclosure at the second end of the fiber optic distribution cable, and a pedestal mounting arrangement. The fiber enclosure includes a terminal body and a removable cover cooperating to define an interior, the top end and a base end. The base end of the fiber enclosure includes a first opening through which the fiber optic distribution cable enters the interior of the fiber enclosure. The fiber optic distribution cable includes a plurality of optical fiber strands, the plurality of optical fiber strands separated from the fiber optic distribution cable within the interior and terminated with fiber optic connectors. The terminal body includes a plurality of fiber optic adapters extending through the terminal body. Each of the adapters has a first end within the interior configured to receive one of the connectors of the optical fiber strands within the interior, and a second end accessible from outside the terminal body configured to receive a connector of an optical fiber drop cable extending to an exterior of the fiber enclosure. The interior includes a cable slack storage arrangement for storing excess cable length of

any of the optical fiber strands between the fiber optic distribution cable and the first end of an adapter, the cable slack storage arrangement providing bend radius protection for the optical fiber strands stored within the cable slack storage arrangement.

BRIEF DESCRIPTION OF THE DRAWINGS

The accompanying drawings, which are incorporated in and constitute a part of the description, illustrate several aspects of the invention and together with the detailed description, serve to explain the principles of the invention. A brief description of the drawings is as follows:

FIG. **1** is a first perspective view of a fiber access terminal according to the present invention.

FIG. **2** is a second perspective view of the fiber access terminal of FIG. **1**.

FIG. **3** is a first side view of the fiber access terminal of FIG. **1**.

FIG. **4** is a second side view of the fiber access terminal of FIG. **1**, offset approximately ninety degrees from the side view of FIG. **3**.

FIG. **5** is a top end view of the fiber access terminal of FIG. **1**.

FIG. **6** is a base end view of the fiber access terminal of FIG. **1**.

FIG. **7** is a first perspective view of a terminal body of the fiber access terminal of FIG. **1**, from a base end of the terminal body.

FIG. **8** is a second perspective view of the terminal body of FIG. **7**, showing more of the base of the terminal body.

FIG. **9** is a third perspective view of the terminal body of FIG. **7**, from a top opposite the base.

FIG. **10** is a first side view of the terminal body of FIG. **7**.

FIG. **11** is a second side view of the terminal body of FIG. **7**, offset approximately ninety degrees from the side view of FIG. **9**.

FIG. **12** is a top end view of the terminal body of FIG. **7**.

FIG. **13** is a base end view of the terminal body of FIG. **7**.

FIG. **14** is a perspective view of a second embodiment of a fiber access terminal according to the present invention.

FIG. **15** is an exploded perspective view of the fiber access terminal of FIG. **14**.

FIG. **16** is a first side view of the fiber access terminal of FIG. **14**.

FIG. **17** is a second side view of the fiber access terminal of FIG. **14**, offset approximately ninety degrees from the side view of FIG. **16**.

FIG. **18** is a third side view of the fiber access terminal of FIG. **14**, opposite the side view of FIG. **17**.

FIG. **19** is a top end view of the fiber access terminal of FIG. **14**.

FIG. **20** is a base end view of the fiber access terminal of FIG. **14**.

FIG. **21** is a first perspective view of a terminal body of the fiber access terminal of FIG. **14**.

FIG. **22** is a second perspective view of the terminal body of FIG. **21**.

FIG. **23** is a first side view of the terminal body of FIG. **21**.

FIG. **24** is a second side view of the terminal body of FIG. **21**, opposite the side view of FIG. **23**.

FIG. **25** is a perspective view of a terminal mount with the fiber access terminal of FIG. **13** mounted.

FIG. **26** is a front view of the terminal mount of FIG. **25**.

FIG. **27** is a front view of a third embodiment of a fiber access terminal according to the present invention, with a fiber distribution cable entering the terminal through a base.

FIG. **28** is a front view of the terminal of FIG. **27**, with the cover open and the fiber distribution cable extending within the interior of the terminal.

FIG. **29** is a perspective view of the terminal of FIG. **28**.

FIG. **30** is a side view of the terminal of FIG. **27**, offset approximately ninety degrees from the side view of FIG. **27**, without the fiber distribution cable.

FIG. **31** is an end view of the base of the terminal of FIG. **30**.

FIG. **32** is an end view of a top of the terminal of FIG. **30**.

FIG. **33** is a perspective view of a back of the terminal of FIG. **30**.

FIG. **34** is a perspective view of the side of the terminal of FIG. **30**.

FIG. **35** is a perspective view of the front of the terminal of FIG. **30**.

FIG. **36** is a second perspective view of the back of the terminal of FIG. **33**.

FIG. **37** is a perspective view of a second side of the terminal of FIG. **30**.

FIG. **38** is a front view of the terminal of FIG. **30**, with the cover open to show the interior of the terminal.

FIG. **39** is a side view of the terminal of FIG. **38**.

FIG. **40** is an end view of the base of the terminal of FIG. **38**.

FIG. **41** is an end view of the top of the terminal of FIG. **38**.

FIG. **42** is a front perspective view of the terminal of FIG. **38**.

FIG. **43** is a second front perspective view of the terminal of FIG. **38**.

FIG. **44** is a side perspective view of the terminal of FIG. **38**.

FIG. **45** is a second side perspective view of the terminal of FIG. **38**.

FIG. **46** is a back perspective view of the terminal of FIG. **38**.

FIG. **47** is a perspective view of a fourth alternative embodiment of a fiber access terminal according to the present invention, including pedestal mounting.

FIGS. **48** to **51** are a series of four side views of the fiber access terminal and pedestal of FIG. **47**, rotated approximately ninety degrees from each other.

FIG. **52** is a top view of the fiber access terminal and pedestal of FIG. **47**.

FIG. **53** is a bottom view of the fiber access terminal and pedestal of FIG. **47**.

FIG. **54** is an exploded perspective view of the fiber access terminal and pedestal of FIG. **47**.

FIG. **55** is a perspective view of the fiber access terminal of FIG. **47**, removed from the pedestal.

FIG. **56** is a top view of the fiber access terminal of FIG. **55**.

FIG. **57** is a bottom view of the fiber access terminal of FIG. **55**.

FIGS. **58** to **61** are a series of four side views of the fiber access terminal and pedestal of FIG. **55**, rotated approximately ninety degrees from each other.

FIG. **62** is an exploded perspective view of the fiber access terminal of FIG. **55**, with a multi-fiber communications cable entering the bottom of the fiber access terminal and individual optical fibers directed to each of the optical fiber drop connectors.

FIG. **63** is a closer view of the multi-fiber communications cable entering the bottom of the fiber access terminal of FIG. **62**.

FIGS. **64** to **67** are a series of four side views of the fiber access terminal of FIG. **62** with the cover removed.

FIG. **68** is a top view of the fiber access terminal of FIG. **62** with the cover removed.

FIG. **69** is a bottom view of the fiber access terminal of FIG. **62** with the cover removed.

FIG. **70** is a first perspective view of a fiber access terminal housing of a fifth alternative embodiment of a fiber access terminal according to the present invention.

FIG. **71** is a second perspective view of the fiber access terminal housing of FIG. **70**.

FIG. **72** is a view of an exterior back of the fiber access terminal housing of FIG. **70**.

FIG. **73** is a side view of the fiber access terminal housing of FIG. **70**.

FIG. **74** is a view of an interior front of the fiber access terminal housing of FIG. **70**.

FIG. **75** is a cross-sectional view of the fiber access terminal of FIG. **70**, taken along line **75-75** of FIG. **74**.

FIG. **76** is a closer view of connector mounting locations of the fiber access terminal housing of FIG. **70**.

FIG. **77** is a base end cross-sectional view of the fiber access terminal housing of FIG. **70**, taken along line **77-77** of FIG. **74**.

FIG. **78** is a top end view of the fiber access terminal housing of FIG. **70**, with a partial cross-sectional view taken along line **78-78** in FIG. **72**.

FIG. **79** is a base end view of the fiber access terminal housing of FIG. **70** with a partial cross-sectional view taken along line **79-79** in FIG. **72**.

FIG. **80** is a first perspective view of a cover for use with the fiber access terminal housing of FIG. **70**.

FIG. **81** is a second perspective view of the cover of FIG. **80**.

FIG. **82** is a view of an interior front of the cover of FIG. **80**.

FIG. **83** is a side view of the cover of FIG. **80**, with a partial cross-sectional view taken along line **83-83** in FIG. **82**.

FIG. **84** is a view of an exterior back of the cover of FIG. **80**.

FIG. **85** is a cross-sectional base end view of the cover of FIG. **80**, taken along line **85-85** in FIG. **84**.

FIG. **86** is a partially exploded view of the fiber access terminal housing of FIG. **70**, with a portion of the threaded fastener inserts exploded.

FIG. **87** is a closer view of one end of the fiber access terminal of FIG. **86**, showing two of the threaded fastener inserts exploded.

FIG. **88** is a cross-sectional view of one of the threaded fastener inserts positioned within an opening of the fiber access terminal housing of FIG. **86**.

FIG. **89** is a perspective view of the interior front of the fiber access terminal housing of FIG. **70**, with three ruggedized fiber connectors mounted within mounting openings of the housing and a fourth fiber connector exploded from another mounting opening.

FIG. **90** is a first perspective view of a cable clamp halve for use with the fiber access housing of FIG. **70** and the cover of FIG. **80**.

FIG. **91** is a second perspective view of the cable clamp of FIG. **90**.

FIG. **92** is a side view of an outer side of the cable clamp of FIG. **90**.

FIG. **93** is a side view of an inner side of the cable clamp of FIG. **90**.

FIG. **94** is an end cross-sectional view of the cable clamp of FIG. **90**, taken along line **94-94** of FIG. **92**.

FIG. **95** is an end partial cross-sectional view of the cable clamp of FIG. **90**, taken along line **95-95** of FIG. **92**.

FIG. **96** is a cross-sectional view of the cable clamp of FIG. **90**, taken along line **96-96** of FIG. **92**.

FIG. **97** is a closer view of an outer sheath clamping area of the cable clamp of FIG. **93**.

FIG. **98** is a closer view of the outer sheath clamping area of the cable clamp of FIG. **96**.

FIG. **99** is a closer view of a cable routing channel of the cable clamp of FIG. **95**.

FIG. **100** is a perspective view of a cable routing and management insert for use with the fiber access housing of FIG. **70** and the cover of FIG. **80**.

FIG. **101** is a first side of the cable routing and management insert of FIG. **100**.

FIG. **102** is an edge view of the cable routing and management insert of FIG. **100**.

FIG. **103** is a first perspective view of a fiber access terminal housing of a sixth alternative embodiment of a fiber access terminal according to the present invention.

FIG. **104** is a second perspective view of the fiber access terminal housing of FIG. **103**.

FIG. **105** is a view of an exterior back of the fiber access terminal housing of FIG. **103**.

FIG. **106** is a side view of the fiber access terminal housing of FIG. **103**.

FIG. **107** is a view of an interior front of the fiber access terminal housing of FIG. **103**.

FIG. **108** is a cross-sectional view of the fiber access terminal of FIG. **103**, taken along line **108-108** of FIG. **107**.

FIG. **109** is a closer perspective view of connector mounting locations of the fiber access terminal housing of FIG. **103**.

FIG. **110** is a base end view of the fiber access terminal housing of FIG. **103**.

FIG. **111** is a top end view of the fiber access terminal housing of FIG. **103**, with a partial cross-sectional view taken along line **111-111** in FIG. **105**.

FIG. **112** is a base end view of the fiber access terminal housing of FIG. **103**, with a partial cross-sectional view taken along line **112-112** in FIG. **105**.

FIG. **113** is a first perspective view of a cover for use with the fiber access terminal housing of FIG. **103**.

FIG. **114** is a second perspective view of the cover of FIG. **113**.

FIG. **115** is a view of an interior front of the cover of FIG. **113**.

FIG. **116** is a side view of the cover of FIG. **113**, with a partial cross-sectional view taken along line **116-116** in FIG. **115**.

FIG. **117** is a view of an exterior back of the cover of FIG. **113**.

FIG. **118** is a cross-sectional base end view of the cover of FIG. **113**, taken along line **118-118** in FIG. **117**.

FIG. **119** is a is a perspective view of a cable routing and management insert for use with the fiber access housing of FIG. **103** and the cover of FIG. **113**.

FIG. **120** is a first side of the cable routing and management insert of FIG. **119**.

FIG. **121** is an edge view of the cable routing and management insert of FIG. **119**.

FIG. **122** is a base end view of the cable routing and management insert of FIG. **119**.

FIG. **123** is a perspective view of the cable routing and management insert of FIG. **119**, with a multi-fiber fiber optic cable partially installed and routed about the insert.

FIG. **124** is a closer view of a top end of the cable routing and management insert of FIG. **123**, with a cable fanout mounted to the insert.

FIG. **125** is a first perspective view of a fiber access terminal housing of a seventh alternative embodiment of a fiber access terminal according to the present invention.

FIG. **126** is a second perspective view of the fiber access terminal housing of FIG. **125**.

FIG. **127** is a view of an exterior back of the fiber access terminal housing of FIG. **125**.

FIG. **128** is a side view of the fiber access terminal housing of FIG. **125**.

FIG. **129** is a view of an interior front of the fiber access terminal housing of FIG. **125**.

FIG. **130** is a cross-sectional view of the fiber access terminal of FIG. **125**, taken along line **130-130** of FIG. **129**.

FIG. **131** is a closer perspective view of connector mounting locations of the fiber access terminal housing of FIG. **125**.

FIG. **132** is a base end view of the fiber access terminal housing of FIG. **125**.

FIG. **133** is a top end view of the fiber access terminal housing of FIG. **125**, with a partial cross-sectional view taken along line **133-133** in FIG. **127**.

FIG. **134** is a base end view of the fiber access terminal housing of FIG. **125**, with a partial cross-sectional view taken along line **134-134** in FIG. **127**.

FIG. **135** is a first perspective view of a cover for use with the fiber access terminal housing of FIG. **125**.

FIG. **136** is a second perspective view of the cover of FIG. **135**.

FIG. **137** is a view of an exterior back of the cover of FIG. **135**.

FIG. **138** is a view of an interior front of the cover of FIG. **135**.

FIG. **139** is a side view of the cover of FIG. **135**.

FIG. **140** is base end view of the cover of FIG. **135**.

DETAILED DESCRIPTION

Reference will now be made in detail to exemplary aspects of the present invention which are illustrated in the accompanying drawings. Wherever possible, the same reference numbers will be used throughout the drawings to refer to the same or like parts.

FIGS. **1** to **4** show a fiber access terminal **100** for mounting to a fiber distribution cable. Terminal **100** includes a cover **102** and a housing **104**. Housing **104** includes a central distribution cable entry fitting **106** and a plurality of fiber optic connectors **108** extending through housing **104**. Cover **102** includes a top end **110** with a tab **112**. Tab **112** is configured to permit a pull-through rope, cable or wire to be attached to terminal **100** for pulling terminal **100** through a conduit. An opening **114** in tab **112** is provided for attaching the pull through. As shown, terminal **100** is configured to receive a single fiber distribution cable and connect to up to eight fiber drop cables. These cables would extend to housing **104** of terminal **100**, accessible through an open bottom end **116** of cover **102**.

Cover **102** includes a pair of fastener openings **118** positioned adjacent bottom end **116** extending through a cylindrical side wall **120**. Openings **118** receive fasteners to releasably hold cover **102** about base **104** while allowing access into an interior of terminal **100**. FIG. **5** shows top end **110** of terminal **100** with tab **112** centrally positioned. FIG. **6** shows housing **104** positioned within cover **102** with distribution cable fitting **106** centrally located and fiber optic cable connectors **108** evenly spaced about housing **104** around fitting **106**.

Referring now to FIGS. **7** to **13**, housing **104** includes a base **122** through which fitting **106** and cable connectors **108** extend. Each of the cable connectors **108** includes a first or inner end **138** and a second or outer end **136** and extends through a connector opening in base **122** (connector openings are not visible as they are occluded by connectors **108**). Both ends **136** and **138** are configured to receive and mate with a fiber optic cable connector. Fitting **106** defines an opening **144** also extending through base **122** of base **104** so that a fiber distribution cable may pass through base **122** into an interior of defined about an inner structure **124** of terminal **100** by cover **102**. Inner structure **124** includes a top end **126** which is positioned within cover **102** adjacent top end **110**. About base **122** is a circumferential wall **128** sized to fit within cover **102** and fit closely with an inner wall of cover **102** adjacent bottom end **116**. At least one seal, such as o-rings **130**, are positioned about base **104** to provide a weather-tight seal between cover **102** and base **104**.

Extending through circumferential wall **128** is a pair of openings **134** for receiving fasteners extending through openings **118** of cover **102**. Openings **134** are formed through a pair of fastener bosses **132**, providing additional material for the fasteners to extend within. On a bulkhead **146** of inner structure **124** between base **122** and top **126** are plurality of cable routing guides **140** to provide cable slack storage and bend radius protection to fiber optic cables extending into and within terminal **100**. An outer wall **142** extends about bulkhead **146** to help retain cables within cable guides **140** and prevent pinching or other damages to cables when cover **102** is positioned about base **104**. As shown, inner structure **124** is a two-sided structure with similar arrangements of cable guides **140** and outer wall **142** on either side. A plurality of openings **148** extend between the opposing sides of inner structure **124** and a plurality of cable tabs **150** of cable guides **140** are positioned adjacent each of the openings **148**. Cables passing about cable guides **140** on one side of inner structure **124** may pass through one of the openings **148** to pass about one of the cable guides **140** of the other side and then be directed to one of the inner ends **138** of connectors **108**. Tabs **150** are provided to hold cables about cable guides **140**. Tabs **150** and openings **148** are shown positioned adjacent each other but other configurations are also anticipated.

Inner structure may also include a distribution cable tie-off or strain relief fixture adjacent fitting **106** so that the fiber distribution cable extending through opening **144** may be securely held within terminal **100**.

Terminal **100** is expected to be pulled through a buried conduit and mounted in a field enclosure adjacent a customer's home or business. Such a field housing may not provide a weather-tight seal or may be subject to damage allowing entry of contaminants. Fiber optic connectors **108** are anticipated to be environmentally hardened connectors, permitting connection of fiber optic drop cables to connect to customer equipment but providing protection to the connector and connection at fiber access terminal **100**. Terminal **100** is configured to be mounted vertically within such a field housing with top **110** of cover **102** up. The fiber distribution cable would extend out of housing **104** downward and any customer service drop cables connected to connectors **108** would also extend generally downward alongside the distribution cable. Such a configuration provides increased protection of the connectors **108** and any connections between connectors **108** and the customer service drop cables.

Referring now to FIGS. **14** to **20**, a second embodiment **200** of a fiber access terminal according to the present invention is shown. As shown in FIGS. **14** and **15**, terminal **200** includes a cover **202** and a housing **204** having a top end **226**. A plurality of fasteners **231** extend through a plurality of openings **234** in cover **202** and are received within fastener bosses **232** of housing **204** to releasably hold cover **202** to housing **204**. Extending through a base **222** of housing **204** is a fiber distribution cable fitting **106** to permit passage of a fiber

distribution cable through housing **204** into an interior **203** of terminal **200**. A plurality of fiber optic connectors **108** are positioned adjacent cable fitting **106** adjacent base **222**.

Connectors **108** include inner ends **138** and outer ends **136**. As shown, within each connector **108** is a fiber optic adapter **236**. Positioned within each of inner ends **138** in fiber optic adapter **236** is a cable connector **238**. The fiber optic distribution cable entering interior **203** through fitting **106** may be a multistrand cable and each of the individual optical fibers may be broken out of the distribution cable within interior **203**. These individual optical fibers may be routed within interior **203** about a cable guide **240** positioned adjacent top end **226** and may be terminated by cable connector **238**. Such break-outs and terminations are well known in the telecommunications industry.

Cable guide **240** may include one or more tabs **250** to aid in keeping optical fiber cables within interior **203** in the desired position to slack storage and bend radius protection. A wall **242** extends around housing **204** and includes an upper edge **229**. Upper edge **229** is preferably defines a plane so that cover **202** can mate closely with housing **204**. A seal such as a gasket **230** (not shown in the FIGS.) may be positioned between upper edge **229** and cover **202** to aid in forming a weathertight seal for interior **203**.

Referring to FIG. **20**, fitting **106** includes opening **144** extending through base **222** into interior **203** to permit entry of the fiber distribution cable. In FIG. **20**, four of the eight connectors **108** are visible and are arranged in a semicircle about fitting **106**. These four connectors **108** are mounted through mounting surfaces **258** positioned about base **222**. Outer end **136** of each of the visible connectors **108** is angled radially with respect to opening **144** and fitting **106**. This angling of those connectors **108** closest to fitting **106** can be seen in FIGS. **21** to **24**, and aids in access to the outer ends **136** for connecting fiber optic drop cables to provide a service connection between a customer and the fiber distribution cable.

As can be seen in FIGS. **21** to **24**, the other four connectors **108** are similarly arranged in a semi-circle and are angled outward, although they are positioned between base **222** and top end **226**. A narrowed waist area **260** is provided in housing **204** so that these second set of four connectors may be positioned as desired and not increase the overall width of terminal **200**. Similarly to terminal **100**, terminal **200** is configured to be passed through a buried conduit to extend fiber optic connectivity between a fiber distribution terminal and a fiber access terminal. As many of these conduits are limited in diameter, it is desirable that housing **204** provide an arrangement of connectors **108** that improves access for connecting drop cables while not unduly increasing the overall width of terminal **200**. Waist area **260** provides mounting surfaces **262** for the set of four connectors **108** offset from base **222** and insets these four connectors **108** to approximately the same width as the four connectors **108** mounted to surfaces **258**.

All of the eight connectors **108** permit connection of drop cables for connecting to a customer which are generally from the same direction as the fiber distribution cable entering interior **203** through fitting **106** and opening **144**. FIGS. **25** and **26** illustrate the mounting of terminal **200** within a terminal mount **270** extending upward from a mounting base **272** to a top **280**. Terminal **200** is mounted to an inner bulkhead **271** to which are also mounted a plurality of cable routing guides **274** to provide for bend radius protection and cable slack storage which may be used for a multi-fiber distribution cable **276** or a plurality of customer drop cables **278**. By mounting terminal **200** as shown in FIGS. **25** and **26**, fitting **106** and connectors **108** are positioned downward to prevent contaminants from falling in. By directing all cables **276** and **278** to terminal **200** from the same direction, that is, from beneath toward base **222**, cable management within terminal mount **270** may be simplified. It is anticipated that terminal mount **270** could be adapted and configured for use with terminal **100**, described above, as well as with the alternative embodiments of fiber access terminals described below.

FIGS. **27** to **29** illustrate a third alternative embodiment **300** of a fiber access terminal according to the present invention, with a fiber distribution cable **276** extending through fitting **106** in a base **322**. Terminal **300** includes a cover **302** and a housing **304** defining an interior **303** when closed about a hinge **316**, as shown in FIG. **27**. As shown in FIGS. **28** and **29**, cover **302** has been rotated about hinge **316** to expose interior **303**. A catch **317** may be included along a side opposite hinge **316** to releasably hold cover **302** to housing **304** about interior **303**. Mounted within interior **303** on cover **302** are several cable guides **340** for providing bend radius protection and cable slack storage, and a cable splice holder **308**. Mounted within interior **303** on housing **304** is a cable tie-off or strain relief **306** to receive and anchor fiber distribution cable **276**. Cable **276** is a multi-strand cable broken out into individual optical fiber cables **310** which are routed about cable guides **340** and are terminated with cable connectors **238** and connected to inner ends **138** of connectors **108**.

It is anticipated that cable **276** may have more optic fibers than connectors **108** of terminal **300**. These additional fibers may or may not pre-terminated and may be broken out and kept available within interior **303**. These additional fibers would then be available to use as a replacement connection should one of the other fiber cables **310** or cable connectors **238** be damaged. If these additional fibers are not pre-terminated with connectors **238**, they can be field spliced to a connector **238**. Splice block **308** is provided within interior **303** to hold and protect such splices if they are needed.

At a top end **326** of terminal **30** may be formed a tab **312** with an opening **314**. Tab **312** is similar to tab **112**, described above, and provides a tie-off for attaching a line to pull terminal **300** through a buried conduit from a fiber distribution terminal to a fiber access terminal mount similar to mount **270**, shown above. Referring now also to FIG. **30**, housing **304** includes a plurality of mounting faces **358**, **359**, **362** and **363**, for mounting connectors **108**. Between the mounting faces are narrowed waist areas **360** which serve a similar role to waist area **260**, described above. Connectors **108** are angled out with respect to fitting **106** but are similarly configured to terminal **200**, pointed down to receive cables **278**.

Referring now FIGS. **31** and **32**, the two connectors **108** nearest base **322** occlude the remaining six connectors **108**, when viewed from base end **322**, while the two connectors **108** closest to top end **326** occlude the remaining connectors **108** when viewed from top end **326**. Mounting surfaces **358**, **359**, **362** and **363** cooperate with waist areas **360** to ensure that outer ends **136** of connectors **108** may be angled out and accessible along housing **304** while not unduly increasing the size of terminal **300**. FIGS. **33** to **37** provide additional views of terminal **300** with cover **302** and housing **304** closed about interior **303**. FIGS. **38** to **46** provide additional views of terminal **300** with cover **302** hinged open about hinge **316**. Referring to FIG. **42**, cover **302** may include a recess **338** about an inner edge and housing **304** includes a upper edge **339**. Recess **338** and edge **339** cooperate to create a seal between cover **302** and housing **304** when terminal **300** is closed about interior **303**. A seal such as an o-ring or a gasket may be positioned within recess **338** to improve the seal. Referring to FIGS. **43** and **44**, a pair of cable retainers **380**

may be provided along an inner wall **382** of housing **304** to releasably hold cables **310** which might be included within distribution cable **276** but not initially connected to one of the connectors **108**. Alternatively, cable retainers **380** might be used to aid in the routing of cables **310** which are connected with one of the connectors **108**, as desired or required by a particular installation.

FIG. **47** illustrates a fourth alternative embodiment fiber access terminal and pedestal unit **402**, including a fiber access terminal **400** and a pedestal assembly **404**. Terminal and pedestal unit **402** also includes a stake **406** and a pair of lower access door pairs **408**. Stake **406** allows unit **402** to be used as a pedestal for mounting fiber access terminal **400** adjacent to the customer locations without the need for a separate pedestal assembly. Terminals **100**, **200** and **300**, shown above, are configured to be mounted within a separate pedestal structure, as shown in FIG. **25**, although they may also be configured similar to unit **402** to provide a common fiber access terminal and pedestal mounting unit. Lower access door pairs **408** allow terminal **400** to be mounted above ground level for environmental protection, and still protect the fiber distribution and customer drop cables that may be connected to terminal **400**.

FIGS. **48** to **54** show additional views of terminal and pedestal unit **402**. Access door pairs **408** are held to a pair of internal support channels **410** and **412** by fasteners **414** which include security features to deter unauthorized access to unit **402** and terminal **400**. As shown, the security feature is a can washer **416** positioned about each threaded fastener **414** which prevents use of standard wrenches or sockets to remove the fasteners. Each access door pair may preferably include a pair of identical doors **418**, although non-identical doors may also be used. An upper portion of stake **406** extends above the ground when stake **406** is positioned in the field. A pair of fasteners **420** extend through upper portion **422** to mount internal support channel **412** to stake **406**.

In use, terminal **400** might be preconfigured to terminate a fiber distribution cable, as described above with regard to terminals **100**, **200** and **300**. The distribution cable would be extended from a fiber distribution terminal or pedestal to a position adjacent one or more current or future customer locations. Typically the distribution cable would be trenched and buried but other arrangements may also be used. At the desired position, stake **406** may be driven into the ground to a depth required to protect against frost heave or environmentally caused movement, accidental movement or deliberate vandalism. The lowest mounted access door pair **408** would preferably be in contact or have its lower edge recessed beneath ground level.

To connect a customer to terminal **400**, a pre-terminated and connectorized customer drop cable would be extended to a customer premises and trenched to a point adjacent unit **402**. One or both of the access door pairs may be removed to provide access to terminal **400**. From the trench, the drop cable would be extended to the base of terminal **400** and the connector of the cable mated with one of the connectors in the base of terminal **400**. This will optically connect the customer drop cable with one of a plurality of fiber strands of the fiber distribution cable, providing fiber optic connectivity to the customer. The access door pairs would then be reinstalled to unit **402** about the fiber distribution cable and any customer drop cables to protect the cables and the connectors in the base of terminal **400**.

Referring now to FIG. **53**, on a base **432** of terminal **400** are a plurality of fiber optic cable connectors **424** which terminate fiber optic drop cables **428**, and a distribution cable entry fixture **426** through which a distribution cable **427** extends. Connectors **424** and drop cables **428** are part of customer drop cables to permit connection of customer premises equipment to optical fiber within distribution cable **427**. Connectors **424** are shown as Corning OptiTap connectors. It is anticipated that other types and styles of drop cable connectors may be used which provide some degree of environmental sealing.

FIGS. **55** to **62** show terminal **400** including a cover **434** mounted to base **432** and held in place by fasteners **431** extending through openings **452** (see FIG. **62**) in cover **434** and received within openings **458** in base **432**. Alignment pins **430** are also included in base **432** and are received within slots **450** in cover **434**. A pair of brackets **436** extend from base **432** to be attached to an upper end of channels **410** and **412**. The connection of channels **410** and **412** to base **432** ties pedestal assembly **404** to terminal **400** to form unit **402**.

Referring now to FIG. **62**, mounted atop base **432** and extending within cover **434** is an inner structure **454** including a cable slack storage spool **444** extending from both sides of structure **454**. A cable fanout **440** is mounted to inner structure **454** adjacent cable entry fixture **426**. Distribution cable **427** includes a plurality of optical fibers. Once distribution cable **427** has passed through cable entry fixture **426**, a cable clamp **442** is provided to tie off cable **427** and any linear strength members included in cable **427** to inner structure **454**. Within distribution cable **427** are a plurality of individual optical fiber cables **456** which are separated out from distribution cable **427** within fanout **440**. Each spool **444** is sized to provide bend radius protection to optical fiber cables **456** extending to each of a plurality of inner connector fittings **438**. Connectors **424** of drop cables **428** attach to an outer end of inner connector fittings **438** to optical connect to optical fiber cables **456** fanned out from distribution cable **427**. A plurality of cable guides **446** are positioned about each spool to help retain cables **456** about spools **444**.

A pass-through opening **448** is positioned in inner structure **454** above fanout **440** to permit optical fiber cables **456** to be directed to either spool **444** on either side of inner structure **454**. This permits cables **456** to be directed to the side of inner structure **454** most appropriate based on the particular inner connector fitting **438** to which the cable **456** will attach. Cable entry fitting **426** is a compression fitting configured to fit closely about cable **426** and seal against entry water or other contaminants through base **432** when cover **434** is in place.

Referring now to FIG. **63**, a pair of O-rings **468** are positioned about base **432** to engage a lower edge of cover **434** and provide an environmental seal about the junction between base **432** and cover **434**. Cable clamp **442** mates with a cable clamp fitting on inner structure **454** about distribution cable **427** below fanout **440**. Screws **443** extend through cable clamp **442** and are received within openings **462** in clamp fitting **460**. Within each inner connector fitting **438** is a fiber optic adapter **439**. While not shown in FIG. **63**, each of the fiber optic cables **456** would preferably be terminated by a fiber optic connector. The fiber optic connectors terminating each of the cables **456** would be received within the inner end of adapter **439** and positioned to be optically connected with a customer drop cable **428** of a connector **424** when connector **424** is connected to inner connector fitting **438**. Cable entry opening **464** through base **432** for cable **427** is sized to receive and be closed off by cable entry fitting **426**.

FIGS. **64** to **69** illustrate additional views of terminal **400** with cover **434** removed. An open portion of inner structure **454** is provided above base **432** opposite the location of fanout **440** to permit passage of cables **456** from spools **444** on either side of inner structure **454** to any of the adapters **439** on terminal **400**.

It is anticipated that terminals **100**, **200**, **300** and **400** could be configured with fewer connectors **108** similarly positioned within respect to the respective top ends and bases of the terminals. Terminal **300** could be configured with fewer mounting surfaces if six or fewer connectors **108** are desired. Alternatively, any of the terminals could be configured with openings or mounting surfaces for the number of connectors shown in the FIGS., above, but without the full number of connectors **108** mounted, so that additional connectors **108** could be added in the field as needed for a particular installation. Terminal **100** could be configured with connectors **108** angled outward with respect to fitting **106**. If fiber distribution cable **276** has the same number of fibers as there are connectors **108** in any of the terminals **100**, **200** or **300**, a splice holder such as splice holder **308** may not be included in that terminal. However, it is also anticipated that a splice holder can be included within any of the terminals **100**, **200** or **300**. Tie-off or strain relief **306** of terminal **300** could be included in either of terminals **100** or **200**.

Referring now to FIGS. **70** to **102**, components of a fifth embodiment **500** of a fiber access terminal according to the present invention are shown, including a housing **502** and a mating cover **505**. Cover **505** and housing **502** may be assembled to form an enclosure of terminal **500** which is similar to terminal **300**, with certain differences as may be described below. It is anticipated that certain features of terminal **300** may be incorporated into terminal **500** and vice versa.

Referring now to FIGS. **70** to **79** and **89**, housing **502** of terminal **500** includes a plurality of angled mounting projections **504** each having an opening **506** for receiving a ruggedized optical fiber cable connection **508**. As shown in FIG. **89**, connections **508** are Corning Cable Systems OptiTap Connector, which includes an adapter for mating two terminated optical fibers. Other ruggedized or environmentally sealed optical fiber connection systems may also be used with the present invention. Housing **502** includes a top **510** and a base **512**, and at top **512** is a pull-through tab **514** with an opening **516** to attaching a pull-through line. As noted above, it is anticipated that terminal **500** might be pre-mounted to a fiber distribution cable such as cable **276** and pulled through a conduit to a point where desired for connection to a customer drop cable. At base **512**, a cable entry opening **528** is flanked by a pair of fastener openings **530** for mounting a cable clamp, such as shown in FIGS. **90** to **99**, below. Fastener openings **530** are in a pair of lower tabs **531** of base end **512** which are positioned generally centered with the desired cable entry path through cable entry opening **528**.

Housing **502** includes an interior side **518** which will form a portion of an interior **503** when joined up with mating cover **505** shown in FIGS. **80** to **85**, below. About a perimeter of interior side **518** is a recess **520** for receiving a flat gasket **522** (shown in FIG. **89**). It is desirable that terminal **500** be configured to withstand weather extremes and environmental exposure that may occur from being mounted below ground level or in a damp environment. The use of flat gasket **522** may provide improved resistance to water or other contaminant intrusion that might be caused by exposure to multiple freeze-thaw cycles. A plurality of fastener openings **524** are positioned about the same perimeter extending through gasket **522**. Fasteners such as screws may be extended through openings **524** to secure a cover to housing **502**. Adjacent each opening **524** are a pair of spacers **526** to set the desired maximum compression of gasket **522** and prevent over tightening which may compromise the integrity of the seal. It is anticipated that gasket **522** will extend across cable entry opening **528** and provide a seal against a plug or insert which is positioned about an entering fiber distribution cable, such as cable **276**, above. This plug is shown in FIG. **123**, below.

On an exterior side **532** of housing **502**, mounting projections **504** extend at an angle, as shown by the angling of mounting axes **536** with regard to a longitudinal axis **538** of housing **502**. Each pair of adjacent mounting locations **504** defines a mounting face **533** which is angled toward base end **512**. A narrow waisted area **534** is defined between the longitudinally separated pair of mounted projections **504**. As can be seen from the base view of housing **502** in FIG. **77**, angling of mounting projections **504** allows each successive row of projections **504** to be hidden behind the adjacent rows. As shown in the FIGS. below, different alternative embodiments of fiber access terminals similar to terminal **500** may be configured with more mounting projections without increasing the base area of the terminal.

Referring now to FIGS. **74** and **75**, a recess **540** within cable entry opening **528** includes an outer lip **542** and an inner lip **544**. The lips cooperate with a plug or insert **541** (shown in FIG. **123**, below) to provide a environmental seal within opening **528** and cooperate with gasket **522** to complete the seal between cover **505** and housing **502**. Referring now to FIGS. **71**, **74**, **75**, and **77** to **79**, a generally continuous outer wall **546** define an outer limit of gasket recess **520** and a plurality of spaced apart inner wall segments **548** cooperate to define an inner limit of gasket recess **520**.

Referring now to FIGS. **80** to **85**, cover **505** includes an interior side **550**, an exterior side **552**, a top **556** and a base **558**. A plurality of fastener openings **554** are positioned about a perimeter of cover **505** to correspond with fastener openings **524** of housing **502**. Interior side **552** cooperates with interior side **518** of housing **502** to form interior **503** when cover **505** is mounted to housing **502**. Also along the perimeter of cover **505**, on interior side **552** is a gasket seal surface **560** which corresponds to the location of gasket recess **520** of housing **502**. On gasket surface **560** are a pair of ridges or gasket seals, an inner ridge **562** and an outer ridge **564**. These ridges join to form a fastener seal **566** about each fastener opening **554**. Within fastener seal **566** are a pair of recesses **568** which are sized to receive spacers **526** and provide a surface for spacers **526** to bottom out against. The engagement of recesses **568** and spacers **526** set the appropriate amount of compression of gasket **522**. The engagement also sets the appropriate amount of deformation of gasket **522** by ridges **562** and **564**. This set amount of deformation provides an enhanced seal against intrusion of water or other contaminants between cover **505** and housing **502**.

Referring now to FIGS. **86** to **88**, a threaded insert **570** may be used to reinforce openings **524** of housing **502** to provide enhanced strength and durability. It is anticipated that housing **502** may be constructed of a molded and/or machined polymeric material for reasons of economy and materials properties. Such materials may not be well suited for forming and maintaining sharp edges such as are needed to receive and secure removable fasteners such as screws within openings **524**. Threaded inserts **570** may be made of a metallic or other durable material and inserted within openings **524** to provide a sharper and more durable thread **574** to engage a screw inserted through opening **524** from opening **554** of cover **505**. A knurled surface **572** may be provided along an exterior of each inserted **570** to aid in retention of inserts **570** within an enlarged or countersunk portion **580** or opening **524**. Inserts **570** may have a shoulder **576** which engages a mating shoulder **578** at the base of enlarged portion **580** within opening **524**. Engaging insert **570** with a screw extending from one of openings **554** of cover **505** and tightening will tend to draw insert **570** deeper within enlarged portion **580** until shoulders

576 and 578 engage, preventing deeper insertion of insert 570. The screw can then be torqued sufficiently bring spacers 526 into engagement with recesses 568 and set the desired degree of compression and deformation of gasket 522.

FIG. 89 illustrates housing 502 with three ruggedized connections 508 positioned within openings 506 and extending from interior side 518 through to exterior side 532. A fourth connection 508 is shown exploded from its position within the remaining opening 506. Connections 508 are composed of a plurality of components and permit closing off and sealing of openings 506 from environmental and contaminant intrusion. Among these components are an inner seal 507 and an outer o-ring 509. An outer body assembly 582 includes a threaded portion 584 about which is positioned outer seal 509. Threaded portion 584 is inserted through opening 506 and is engaged by inner seal 507 and a threaded ring 586. Threaded ring 586 is used to draw outer body assembly 582 firmly within opening 506 so that outer seal 509 engages exterior side 532 and inner seal engages interior side 518. An adapter 588 is included within outer body assembly 582 and is accessible from interior side 518 to be engaged by interior fiber connector 592. When interior connector 592 is used to terminate an optical fiber cable, such as a fiber 10, within interior 503 of terminal 500, adapter 588 positions the optical fiber for optical connection with a fiber held by a connector configured mate with an outer opposite end of adapter 588 and outer body assembly 582. Alternatively, as shown, an outer seal cap 590 can be positioned in the outer opposite end of outer body assembly 582 to seal adapter 588 from external environmental intrusion. Gasket 522 is in place in gasket recess 520 and includes openings 594 about each fastener opening 524 to accommodate spacers 526.

FIGS. 90 to 99 illustrate a cable clamp half 600 for use with terminal 500. As shown in FIGS. 70 to 75, lowers tab 531 is positioned on either side of cable entry opening 528. A pair of cable clamp halves 600 are placed about fiber distribution cable 276 on base end 512. Each cable clamp half includes a body 602 and an extension 604 extending from one end of the body. Two pairs of fastener openings 606 and 607 extend through body 602. On an end of body 602 opposite extension 604 are recesses 608 which are sized and shaped to receive a corner of tabs 531 adjacent cable entry opening 528. A fastener positioned through one of the openings 607 will also extend through opening 530 of tab 531 and then into opening 607 of the second cable clamp half 600. This will secure cable clamp halves 600 to tabs 531 and thus to housing 502 and to terminal 500. One of each pair of openings 606 and 607 includes a hex-shaped recess on an outer surface 620. When assembled about cable 276, an inner face 622 of each cable clamp half 600 will rest against the inner face 622 of the other half 600.

Extension 604 includes a collar 612 and a pair of halves 600 may define a generally continuous collar. Collar 612 may be used to attached strain relief boots or other similar devices about cable 276 passing through a cable recess 614 formed in inner face 622. Cable recess 614 includes a first section 616 which may sized to fit about a fiber distribution cable but not fit too closely and provide a transition for the cable into a second section 618. Within second section 618 are a plurality of ribs 624 which extend into opening 614. Ribs 624 may cooperate to form a pair of first linear channel portions 626 on either side of a main channel portion 628. Portions 626 are sized to fit closely about linear strength members which may extend along one or both sides of cable 276. Portion 628 is sized to fit closely about a central tube of cable 276 where the fibers are carried. Passage through cable recesses 614 of a pair of cable clamp halves 600 attached to terminal 500 correctly positions cable 276 for entry into opening 528 and into interior 503. The closeness of fit of the shapes of portions 626 and 628 about cable 276 may also provide cable securing or tie-off to terminal 500, although it is anticipated that other cable clamping or tie-off elements may be provided in terminal 500.

Referring now to FIGS. 100 to 102, a cable routing and management insert 700 for positioning within interior side 518 of housing 502, the insert including a top end 702 and a base end 704. A pair of side wall 706 and 708 extend from one side of a base frame 710 to define a cable routing side 712, with an opposite side 714 of frame 710 including structure for receiving distribution cable 276 and directing the fibers 10 within that cable to routing side 712. Cable receiving side 714 includes a pair of brackets 716 for holding a cable mounted device, such as fanout or a splitter mounted to the end of cable 276. From there fibers within cable 276 are separated from each other and directed into an upper portion 718 of side 714 where the fibers are directed to adjacent one of side 706 or 708 and routed through fiber pass-throughs 720 from side 714 to side 712 as the fibers extend toward top end 702.

Once on side 712, fibers are routed through an upper portion 722 of cable routing structures of side 712 and redirected toward base end 704. The fibers may then be directed within a cable routing and slack storage path 724 of side 712 adjacent top end 702 defined within upper portion 722 between an inner wall 726 and outer containment structures 728. As the fibers extend within path 724 toward base end 704, path 724 becomes defined between side walls 706 and 708, and inner walls 730 and 732, respectively. Retention tabs 734 positioned about path 724 aid the retention of fibers within path 724 between tabs 734 and frame 710.

Outside of upper portion 722, a central wall 740 extends from frame 710 on side 712, dividing a lower portion 742 into two cavities, 736 and 738, which correspond to the number of rows of openings 506 in housing 502. Central wall 740 may also provided structural rigidity or strength to insert 700 to resist deflection. Within each cavity 736 and 738, are openings 744, corresponding in position to the location of connections 508. Fibers may pass from cable path 724 into one of openings 744 so that a connector mounted to the end of such fiber may be connected to connection 508 accessible through the opening 744. Fibers may pass about a circular path of upper portion 718 of side 714 or about cable path 724 of side 712 multiple times as necessary for the amount of excess length of slack in the fiber between fiber distribution cable 276 and the particular connection 508.

Referring now to FIGS. 103 to 112, a housing 802 of a seventh alternative embodiment 800 of a fiber access terminal according to the present invention is shown. Terminal 800 is similar in most respects to terminal 500 except that terminal 800 accommodates up to eight connections 508 in eight openings 506 in angled mounting locations 504. Aside from the length of housing 802 required to accommodate two additional pairs of mounting locations 504 and openings 506, housing 504 is generally the same as housing 502. Each of the pairs of mounting locations 504 define a mounting face 533 angled toward base end 512 with narrow waisted areas 534 between each of the mounting faces 534 and the next adjacent pair of mounting locations 504.

As is shown in FIGS. 109 and 110, mounting openings 506 include a pair of opposing flats 804 with one of the flats 804 including a key 806. Flats 804 and key 806 correspond to mating features of threaded portion 584 of connection 508 to correctly orient connection 508 within opening 506 and prevent connection 508 from twisting within opening 506. Simi-

lar features within opening **506** are shown in FIGS. **70** to **79**, above, as well as in FIGS. **125** to **134**, below.

Referring now to FIGS. **113** to **118**, a mating cover **805** for joining with housing **802** to form an enclosure for fiber access terminal **800** is shown. Cover **805** is similarly configured to cover **505** except for being longer to accommodate the added length of housing **802** as compared to housing **502**. Other than length, the remaining elements of cover **805** are essentially the same as cover **505**.

FIGS. **119** to **122** illustrate a cable routing and management insert **750** for use with housing **802** and cover **805**. Insert **750** is similarly configured to insert **700**, with the modification that it is elongated to fit within the longer housing **802** and to provide four additional openings **744** to permit fibers to extend to and connect with the four additional connections **508**. FIG. **119** shows cable receiving side **714** is greater detail, which includes a device receiving area between brackets **716** for receiving the splitter, fanout or other device at the end of fiber distribution cable **276**. A pair of outer walls **765** begin adjacent device receiving area **717** and are positioned toward top end **702** with respect to device receiving area **717**. Outer walls **765** direct fibers from the device into upper portion **718** of side **714** and into a cable path **766** defined between outer walls **765** and a plurality of outer wall segments **767** and an inner wall **769**. Pass-throughs **720** provide for fibers to be passed from path **766** on side **714** into path **724** on side **712**.

As shown in FIG. **121**, cable routing side **712** is generally arranged similarly to side **710** of insert **700**, with extension of cable path **724** to rout to and about four additional openings **744** for passing fibers from pat **724** to connections **508**. To accommodate the need to route fibers to two additional pairs of connections **508**, intermediate turnouts **548** along path **524** are provided so that different lengths of slack may be stored. Turnouts **548** provide additional cable slack storage and routing options which a single continuous loop about side **712** of insert **750** would not. Adjacent base end **704**, additional outer wall segments **729** are included to define the outer boundary of path **724**.

Referring now to FIGS. **123** and **124**, insert **750** is shown with fiber distribution cable **276** extending across base end **704** to a fanout **752** positioned between brackets **716**. A plurality of fibers **310** extend from fanout **752** and are split into two groups **754** of equal or similar numbers of fibers. One of these groups **754** is directed in path **766** clockwise about upper portion **718** and the other is directed in path **766** counter-clockwise. This split arrangement permits one half of the fibers **310** to be directed to connections **508** on one side or channel **736** of insert **750** and one half of the fibers **310** to be directed to connections **508** in the other channel **738**. Once fibers **310** have been positioned within path **766**, they may be routed multiple times about path **766** to store and manage excess cable length. A plurality of retention tabs **770** are positioned about path **766** to aid on the retention of fibers **310** within path **766**.

FIGS. **125** to **140** illustrate an eighth alternative embodiment **900** of a fiber access terminal in accordance with the present invention. FIGS. **125** to **134** show a housing **902** which is consistent in design and function with housings **502** and **802**, above. The differences between the two housings **502**, **802** and **902** are the length of the housings and the number of mounting locations **504** and mounting openings **506** included in each embodiment. Otherwise, details of the layout of interior side **518** and exterior side **532** are essentially the same between the embodiments. Details regarding the arrangement of features and the mounting of connections **508** within openings **506** are unchanged.

Similarly, FIGS. **135** to **140** show a mating cover **905** for use with housing **902** to create terminal **900**. Cover **905** is configured generally the same as covers **505** and **805**, above, with the difference of being longer to mate with the longer housing **902**. When mated, interior sides **518** and **552** face each other and define an interior **903** (not shown) within which cable **276** and fibers **310** are extended and directed to connections **508** mounted in openings **506**. Cable **576** would pass into the interior through cable entry opening **528** in a similar fashion as described above.

Further, it is anticipated that a cable routing and management insert similar to **700** and **750** may be configured for use with terminal **900**.

The embodiments of the inventions disclosed herein have been discussed for the purpose of familiarizing the reader with novel aspects of the present invention. Although preferred embodiments have been shown and described, many changes, modifications, and substitutions may be made by one having skill in the art without unnecessarily departing from the spirit and scope of the present invention. Having described preferred aspects and embodiments of the present invention, modifications and equivalents of the disclosed concepts may readily occur to one skilled in the art. However, it is intended that such modifications and equivalents be included within the scope of the claims which are appended hereto.

What is claimed is:

1. A terminal assembly comprising:

an enclosure defining an interior volume;

a plurality of optical fibers within the interior volume of the enclosure;

the enclosure including a cable connection region at which the enclosure defines a plurality of adapter mounting openings;

a plurality of fiber optic adapters mounted at the adapter mounting openings, each of the fiber optic adapters including a first end accessible from within the interior volume of the enclosure and a second end accessible from outside the enclosure;

a cable management insert positioned within the interior volume of the enclosure for managing the optical fibers within the interior volume of the enclosure;

the cable management insert including a first side and an opposite second side, the first side defining a plurality of fiber routing and storage paths for managing the optical fibers within the interior volume of the enclosure; and

the cable management insert defining a plurality of insert openings that extend through the cable management insert from the first side of the cable management insert to the second side of the cable management insert, the insert openings corresponding in position to at least some of the fiber optic adapters.

2. The terminal assembly of claim **1**, wherein the enclosure is elongated along a central longitudinal axis, and wherein the cable management insert is also elongated along the central longitudinal axis.

3. The terminal assembly of claim **2**, wherein the cable management insert defines a length that extends along the central longitudinal axis between first and second ends of the cable management insert, and wherein the cable management insert includes side walls that extend generally along the length of the cable management insert on opposite sides of the central longitudinal axis.

4. The terminal assembly of claim **3**, wherein at least one of the first and second ends of the cable management insert has a rounded configuration for guiding at least some of the optical fibers along a curved path.

5. The terminal assembly of claim 4, wherein the cable management insert defines an outer boundary that generally matches a corresponding shape defined by the interior volume of the enclosure.

6. The terminal assembly of claim 1, wherein the cable management insert includes retention tabs for aiding retention of at least some of the optical fibers along the fiber routing and storage paths.

7. The terminal assembly of claim 1, wherein the cable management insert includes at least one curved fiber guide structure for guiding the optical fibers along a curved path.

8. The terminal assembly of claim 7, further comprising one or more fiber retention tabs provided on the curved fiber guide structure.

9. The terminal assembly of claim 7, wherein at least some of the optical fibers are routed in at least a partial loop around the curved fiber guide structure.

10. The terminal assembly of claim 7, wherein the at least one curved fiber guide structure includes at least a first curved fiber guide structure provided at the first side of the cable management insert and a second curved fiber guide structure provided at the second side of the cable management insert.

11. The terminal assembly of claim 10, wherein at least some of the optical fibers are routed in at least a partial loop around the first curved fiber guide structure located at the first side of the cable management insert, and wherein at least some of the optical fibers are routed in at least a partial loop around the second curved fiber guide structure located at the second side of the cable management insert.

12. The terminal assembly of claim 1, wherein the cable management insert includes one or more brackets for holding a fiber fanout.

13. The terminal assembly of claim 1, wherein the enclosure includes a front piece and a rear piece that are connected together.

14. The terminal assembly of claim 13, wherein the first side of the cable management insert faces toward the rear piece of the enclosure and the second side of the cable management insert faces toward the front piece of the enclosure, wherein the front piece of the enclosure includes the adapter mounting openings of the cable connection region, and wherein portions of one or more of the optical fibers are stored in a looped configuration at the first side of the cable management insert.

15. The terminal assembly of claim 1, wherein the cable management insert includes straight side walls and curved fiber guide walls that cooperate to define at least some of the fiber routing and storage paths on the cable management insert.

16. The terminal assembly of claim 15, further comprising fiber retention tabs provided on the straight side walls and the curved fiber guide walls.

17. The terminal assembly of claim 15, wherein the cable management insert is elongated along a central longitudinal axis, wherein the straight side walls are positioned on opposite sides of the central longitudinal axis and are parallel to the central longitudinal axis, and wherein at least some of the curved fiber guide walls define curved fiber paths that extend between the straight side walls.

18. The terminal assembly of claim 1, wherein the optical fibers within the enclosure do not include optical splices.

19. The terminal assembly of claim 1, further comprising a fiber optic cable that enters the enclosure, the fiber optic cable including the plurality of optical fibers.

20. The terminal assembly of claim 1, wherein the cable management insert is elongated along a central longitudinal axis, and wherein at least a portion of the fiber optic cable is secured to the cable management insert at an attachment location positioned generally at the central longitudinal axis.

21. The terminal assembly of claim 20, wherein the plurality of optical fibers are separated apart adjacent the attachment location.

22. The terminal assembly of claim 1, wherein the cable management insert is elongated along a central longitudinal axis, wherein the cable management insert defines a length that extends along the central longitudinal axis between first and second ends of the cable management insert, wherein the cable management insert includes side walls that extend generally along the length of the cable management insert on opposite sides of the central longitudinal axis, wherein the cable management insert defines a width that extends between the side walls, wherein the cable management insert includes a first partial spool structure positioned adjacent the first end of the cable management insert that defines a first curved fiber path that extends generally across the width of the cable management insert, wherein the cable management insert includes a second partial spool structure that is positioned between the first partial spool structure and the second end of the cable management insert and that defines a second curved fiber path that extends generally across the width of the cable management insert, wherein the cable management insert includes a third partial spool structure that is positioned between the second partial spool structure and the second end of the cable management insert and that defines a third curved fiber path that extends generally across the width of the cable management insert, wherein the first and second curved fiber paths curve in a first direction, and wherein the third curved fiber path curves in a second direction that is opposite from the first direction.

23. The terminal assembly of claim 22, further comprising a fourth partial spool structure that is positioned between the third partial spool structure and the second end of the cable management insert and that defines a fourth curved fiber path that extends generally across the width of the cable management insert, the fourth curved fiber path curving in the second direction.

24. The terminal assembly of claim 23, further comprising a fifth partial spool structure that is positioned adjacent the second end of the cable management insert and that defines a fifth curved fiber path that extends generally across the width of the cable management insert, the fifth curved fiber path curving in the second direction.

25. The terminal assembly of claim 1, wherein the enclosure includes a front side and a back side with the second ends of the fiber optic adapters being accessible from the front side, wherein at least some of the fiber optic adapters are positioned along axes that are at oblique angles relative to the back side.

26. A terminal assembly comprising:

an enclosure including a first end and an opposite second end, the enclosure defining an interior volume, the enclosure defining a central axis that extends between the first and second ends;

a plurality of optical fibers within the interior volume of the enclosure;

the enclosure defining a first cable connection region having a first group of adapter mounting openings;

the enclosure defining a second cable connection region disposed between the first cable connection region and the second end, the second cable connection region having a second group of adapter mounting openings;

the enclosure having a waisted area disposed between the first and second cable connection regions;

a plurality of fiber optic adapters mounted at the openings of the first and second groups of adapter mounting open-

ings, each of the fiber optic adapters including a first end accessible from within the interior volume of the enclosure and a second end accessible from outside the enclosure;

a cable management insert positioned within the interior volume of the enclosure for managing the optical fibers within the interior volume of the enclosure;

the cable management insert including a first side and an opposite second side, at least the first side defining a plurality of fiber routing paths for managing the optical fibers within the interior volume of the enclosure; and

the cable management insert defining a plurality of insert openings that extend through the cable management insert from the first side of the cable management insert to the second side of the cable management insert, the insert openings corresponding in position to at least some of the fiber optic adapters.

27. The terminal assembly of claim **26**, wherein at least some of the optical fibers extend through the insert openings.

28. The terminal assembly of claim **26**, wherein the optical fibers within the enclosure do not include optical splices.

29. The terminal assembly of claim **26**, wherein the cable management insert is elongated along the central axis, wherein the cable management insert defines a length that extends along the central axis between first and second ends of the cable management insert, wherein the cable management insert includes side walls that extend generally along the length of the cable management insert on opposite sides of the central axis, wherein the cable management insert defines a width that extends between the side walls, wherein the cable management insert includes a first partial spool structure positioned adjacent the first end of the cable management insert that defines a first curved fiber path that extends generally across the width of the cable management insert, wherein the cable management insert includes a second partial spool structure that is positioned between the first partial spool structure and the second end of the cable management insert and that defines a second curved fiber path that extends generally across the width of the cable management insert, wherein the cable management insert includes a third partial spool structure that is positioned between the second partial spool structure and the second end of the cable management insert and that defines a third curved fiber path that extends generally across the width of the cable management insert, wherein the first and second curved fiber paths curve in a first direction, and wherein the third curved fiber path curves in a second direction that is opposite from the first direction.

30. The terminal assembly of claim **29**, further comprising a fourth partial spool structure that is positioned between the third partial spool structure and the second end of the cable management insert and that defines a fourth curved fiber path that extends generally across the width of the cable management insert, the fourth curved fiber path curving in the second direction.

31. The terminal assembly of claim **30**, further comprising a fifth partial spool structure that is positioned adjacent the second end of the cable management insert and that defines a fifth curved fiber path that extends generally across the width of the cable management insert, the fifth curved fiber path curving in the second direction.

32. The terminal assembly of claim **26**, wherein at least two adapter mounting openings are defined at each of the first and second cable connection regions.

33. The terminal assembly of claim **26**, wherein a first group of the fiber optic adapters is located at a first side of the central axis of the enclosure and a second group of the fiber optic adapters is located at a second side of the central axis, wherein a first group of the optical fibers is looped in a clockwise direction on the cable management insert and are routed to the first group of the fiber optic adapters and wherein a second group of the optical fibers is looped in a counterclockwise direction on the cable management insert and are routed to the second group of the fiber optic adapters.

34. The terminal assembly of claim **26**, wherein the enclosure includes a front side and a back side with the second ends of the fiber optic adapters being accessible from the front side, wherein at least some of the fiber optic adapters are positioned along axes that are at oblique angles relative to the back side.

35. The terminal assembly of claim **34**, wherein at least one of the fiber optic adapters in the first cable connection region faces in the same direction as at least one of the fiber optic adapters in the second cable connection region.

* * * * *

UNITED STATES PATENT AND TRADEMARK OFFICE

CERTIFICATE OF CORRECTION

PATENT NO. : 7,539,388 B2
APPLICATION NO. : 12/145974
DATED : May 26, 2009
INVENTOR(S) : Mertesdorf et al.

It is certified that error appears in the above-identified patent and that said Letters Patent is hereby corrected as shown below:

On Title Page 2, Item (56) References Cited, Other Publications: "Mount Box Dec. 24, 1936 Fiber" should read --Mount Box 12/24/36 Fiber--

Col. 9, lines 64-65: "used for a multi-fiber distribution cable **276**" should read --used for a multi-fiber fiber distribution cable **276**--

Signed and Sealed this
Fifth Day of February, 2013

Teresa Stanek Rea
Acting Director of the United States Patent and Trademark Office