US008121458B2

(12) **United States Patent**
Barth et al.

(10) **Patent No.: US 8,121,458 B2**
(45) **Date of Patent: Feb. 21, 2012**

(54) **FIBER DISTRIBUTION HUB WITH SWING FRAME AND MODULAR TERMINATION PANELS**

(75) Inventors: **Michael Kenneth Barth**, Bloomington, MN (US); **Joshua A. Zabel**, Lester Prairie, MN (US); **Soutsada Vongseng**, Chanhassen, MN (US); **Matthew D. Ferris**, Carver, MN (US); **Steve Anderson**, Shakopee, MN (US); **Craig M. Standish**, Waconia, MN (US)

(73) Assignee: **ADC Telecommunications, Inc.**, Eden Prairie, MN (US)

(*) Notice: Subject to any disclaimer, the term of this patent is extended or adjusted under 35 U.S.C. 154(b) by 64 days.

(21) Appl. No.: **12/781,577**

(22) Filed: **May 17, 2010**

(65) **Prior Publication Data**

US 2011/0123165 A1 May 26, 2011

Related U.S. Application Data

(63) Continuation of application No. 11/354,286, filed on Feb. 13, 2006, now Pat. No. 7,720,343.

(51) **Int. Cl.**
G02B 6/00 (2006.01)

(52) **U.S. Cl.** **385/135**; 385/137

(58) **Field of Classification Search** 385/135, 385/137

See application file for complete search history.

(56) **References Cited**

U.S. PATENT DOCUMENTS

4,736,100	A	4/1988	Vastagh
4,747,020	A	5/1988	Brickley et al.
4,792,203	A	12/1988	Nelson et al.
4,824,196	A	4/1989	Bylander
4,861,134	A	8/1989	Alameel et al.
4,900,123	A	2/1990	Barlow et al.
4,948,220	A	8/1990	Violo et al.
4,995,688	A	2/1991	Anton et al.
5,023,646	A	6/1991	Ishida et al.
5,073,042	A	12/1991	Mulholland et al.
5,076,688	A	12/1991	Bowen et al.
5,142,598	A	8/1992	Tabone
5,214,735	A	5/1993	Henneberger et al.
5,233,674	A	8/1993	Vladic
5,274,729	A	12/1993	King et al.
5,274,731	A	12/1993	White
5,317,663	A	5/1994	Beard et al.

(Continued)

FOREIGN PATENT DOCUMENTS

DE 103 07 944 A1 9/2004

(Continued)

OTHER PUBLICATIONS

Brochure from Amphenol Corp. entitled "Amphenol® 954 Series one piece SC Connector," 2 pgs. (1990).

(Continued)

Primary Examiner — Mark Robinson
Assistant Examiner — Erin Chiem
(74) *Attorney, Agent, or Firm* — Merchant & Gould P.C.

(57) **ABSTRACT**

A fiber distribution system includes one or more fiber distribution hubs (FDHs) that provide an interface at a termination panel between incoming fibers routed from a central office and outgoing fibers routed to network subscribers. Termination modules can be incrementally added to the termination panel. The FDH can include one or more optical splitter modules that split an optical signal into two or more signals. The optical splitter modules can be incrementally added along with one or more storage modules. The subscriber termination panel, optical splitters, and storage modules can be provided on a swing frame.

20 Claims, 24 Drawing Sheets

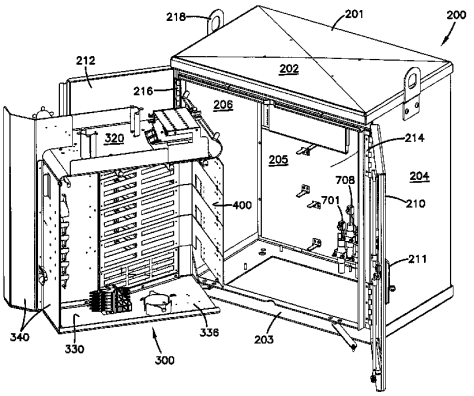

U.S. PATENT DOCUMENTS

5,333,221	A	7/1994	Briggs et al.
5,333,222	A	7/1994	Belenkiy et al.
5,359,688	A	10/1994	Underwood
5,367,598	A	11/1994	Devenish, III et al.
5,402,515	A	3/1995	Vidacovich et al.
5,408,557	A	4/1995	Hsu
RE34,955	E	5/1995	Anton et al.
5,420,958	A	5/1995	Henson et al.
5,442,726	A	8/1995	Howard et al.
5,448,015	A	9/1995	Jamet et al.
5,469,526	A	11/1995	Rawlings
5,497,444	A	3/1996	Wheeler
5,511,144	A	4/1996	Hawkins et al.
5,542,015	A	7/1996	Hultermans
5,647,043	A	7/1997	Anderson et al.
5,708,751	A	1/1998	Mattei
5,717,810	A	2/1998	Wheeler
5,734,774	A	3/1998	Morrell
5,734,776	A	3/1998	Puetz
5,758,003	A	5/1998	Wheeler et al.
5,764,844	A	6/1998	Mendes
5,774,612	A	6/1998	Belenkiy et al.
5,823,646	A	10/1998	Arizpe et al.
5,825,955	A	10/1998	Ernst et al.
5,883,995	A	3/1999	Lu
5,930,425	A	7/1999	Abel et al.
5,945,633	A	8/1999	Ott et al.
5,956,444	A	9/1999	Duda et al.
5,969,294	A	10/1999	Eberle et al.
6,027,252	A	2/2000	Erdman et al.
6,044,193	A	3/2000	Szentesi et al.
6,061,492	A	5/2000	Strause et al.
6,079,881	A	6/2000	Roth
6,149,315	A	11/2000	Stephenson
6,160,946	A	12/2000	Thompson et al.
6,188,687	B1	2/2001	Mussman et al.
6,188,825	B1	2/2001	Bandy et al.
6,208,796	B1	3/2001	Williams Vigliaturo
6,227,717	B1	5/2001	Ott et al.
6,234,683	B1	5/2001	Waldron et al.
6,236,795	B1	5/2001	Rodgers
6,240,229	B1	5/2001	Roth
6,271,484	B1	8/2001	Tokutsu
6,278,829	B1	8/2001	BuAbbud et al.
RE37,489	E	1/2002	Anton et al.
6,347,888	B1	2/2002	Puetz
6,356,697	B1	3/2002	Braga et al.
6,363,200	B1	3/2002	Thompson et al.
6,385,381	B1	5/2002	Janus et al.
6,411,767	B1	6/2002	Burrous et al.
6,424,781	B1	7/2002	Puetz et al.
6,425,694	B1	7/2002	Szilagyi et al.
6,431,762	B1	8/2002	Taira et al.
6,434,313	B1	8/2002	Clapp, Jr. et al.
6,452,925	B1	9/2002	Sistanizadeh et al.
6,453,033	B1	9/2002	Little et al.
6,464,402	B1	10/2002	Andrews et al.
D466,087	S	11/2002	Cuny et al.
6,480,487	B1	11/2002	Wegleitner et al.
6,483,977	B2	11/2002	Battey et al.
6,496,640	B1	12/2002	Harvey et al.
6,539,147	B1	3/2003	Mahony
6,539,160	B2	3/2003	Battey et al.
6,542,688	B1	4/2003	Battey et al.
6,554,485	B1	4/2003	Beatty et al.
6,577,595	B1	6/2003	Counterman
6,591,051	B2	7/2003	Solheid et al.
6,597,670	B1	7/2003	Tweedy et al.
6,614,980	B1	9/2003	Mahony
6,621,975	B2	9/2003	Laporte et al.
6,625,375	B1	9/2003	Mahony
6,631,237	B2	10/2003	Knudsen et al.
6,654,536	B2	11/2003	Battey et al.
6,661,961	B1	12/2003	Allen et al.
6,668,127	B1	12/2003	Mahony
6,760,531	B1	7/2004	Solheid et al.
6,778,752	B2	8/2004	LaPorte et al.
6,788,786	B1	9/2004	Kessler et al.
6,792,191	B1	9/2004	Clapp, Jr. et al.
6,815,612	B2	11/2004	Bloodworth et al.
6,850,685	B2	2/2005	Tinucci et al.
6,870,734	B2	3/2005	Mertesdorf et al.
6,925,241	B2	8/2005	Bohle et al.
6,983,095	B2	1/2006	Reagan et al.
7,088,899	B2	8/2006	Reagan et al.
7,103,255	B2	9/2006	Reagan et al.
7,146,089	B2	12/2006	Reagan et al.
7,171,102	B2	1/2007	Reagan et al.
7,200,317	B2	4/2007	Reagan et al.
7,369,741	B2	5/2008	Reagan et al.
2002/0034290	A1	3/2002	Pershan
2003/0174996	A1	9/2003	Henschel et al.
2004/0074852	A1	4/2004	Knudsen et al.
2004/0228598	A1	11/2004	Allen et al.
2004/0264873	A1	12/2004	Smith et al.
2005/0002633	A1	1/2005	Solheid et al.
2005/0013768	A1	1/2005	Malhotra et al.
2005/0129379	A1	6/2005	Reagan et al.
2005/0135768	A1	6/2005	Rapp et al.
2005/0281526	A1	12/2005	Vongseng et al.
2006/0003637	A1	1/2006	Neumetzler et al.
2006/0093301	A1	5/2006	Zimmel et al.
2006/0177190	A1	8/2006	Vongseng et al.
2006/0228086	A1	10/2006	Holmberg et al.
2006/0269205	A1	11/2006	Zimmel
2006/0269206	A1	11/2006	Zimmel
2007/0047893	A1	3/2007	Kramer et al.

FOREIGN PATENT DOCUMENTS

EP	0 788 002	A1	8/1997
EP	0 871 047	A1	10/1998
EP	0 975 180	A1	1/2000
EP	1 045 267	A1	10/2000
JP	63-229409		9/1988
JP	2005-222749		8/2005
WO	WO 98/53347		11/1998
WO	WO 00/75706	A2	12/2000
WO	WO 02/103429	A2	12/2002

OTHER PUBLICATIONS

AMP Inc. catalog entitled "Fiber Optic Products," front and back covers and p. 59, (4 pgs.) (® 1991).

HRS catalog entitled "Optical Fibre Connectors," front and back covers and pp. 16, 17 and 49 (5 pages) (Mar. 1991).

AT&T Network Systems catalog entitled "Fiber Optic Products Innovation for wide ranging applications," front and back covers and pp. 6-1 through 6-16 (18 pages) (® 1995).

NTT Int'l Fiber Termination Module (FTM) & Premises Optical Distribution Cabinets (PODC) product brochure, 3 pages (Applicants admit as prior art as of the filing date).

ADC Telecommunications, Inc.'s Outside Plant, Fiber Cross-Connect Solutions Products Brochure; front cover, Table of Contents, pp. 1-48, and back cover; revised Jun. 2002, Item No. 1047.

ADC Telecommunications, Inc.'s 6th Edition of Next Generation Frame (NGF) Product Family Ordering Guide; front cover, Table of Contents, pp. 1-41, and back cover; revised Feb. 2003, Item No. 820.

ADC Telecommunications, Inc.'s Fiber Optic, Cable Assemblies and Accessories Brochure; front cover, Table of Contents, pp. 1-23, and back cover; revised Apr. 2003, Item No. 100300.

ADC Telecommunications, Inc.'s OMX™ 600, Optical Distribution Frame Brochure; front cover, Table of Contents, pp. 1-14, and back cover; revised Feb. 2000, Item No. 854.

Iwano, S. et al., "MU-type Optical Fiber Connector System," *NTT Review*, vol. 9, No. 2, pp. 63-71 (Mar. 1997).

Sugita, E. et al., "SC-Type Single-Mode Optical Fiber Connectors," *Journal of Lightwave Technology*, vol. 7, No. 11, pp. 1689-1696 (Nov. 1989).

FONS Corporation's MDC Series Rack or Wall Mount Enclosures product sheet, 3 pages, (2002).

FONS Corporation's Modular Distribution Cabinets Rack Mount Enclosures, Model MDC-7, product sheet, 2 pages (2005) (shows the same device as shown in Exhibit L).
FONS Corporation's Technical Drawing No. 11669, Rev. D, of Distribution Cabinet Assembly MFDC-7, 1 page (technical drawing depicting the device shown in Exhibit M).
ADC Telecommunications, Inc.'s Secure Fiber Entrance Terminal (SFET) Brochure; front cover, pp. 2-7, and back cover; revised May 1998, Item No. 1005.
ADC Telecommunications, Inc.'s 2nd Edition of Fiber Panel Products; front cover, Table of Contents, pp. 1-111, and back cover; revised Jul. 1996, Item No. 846.

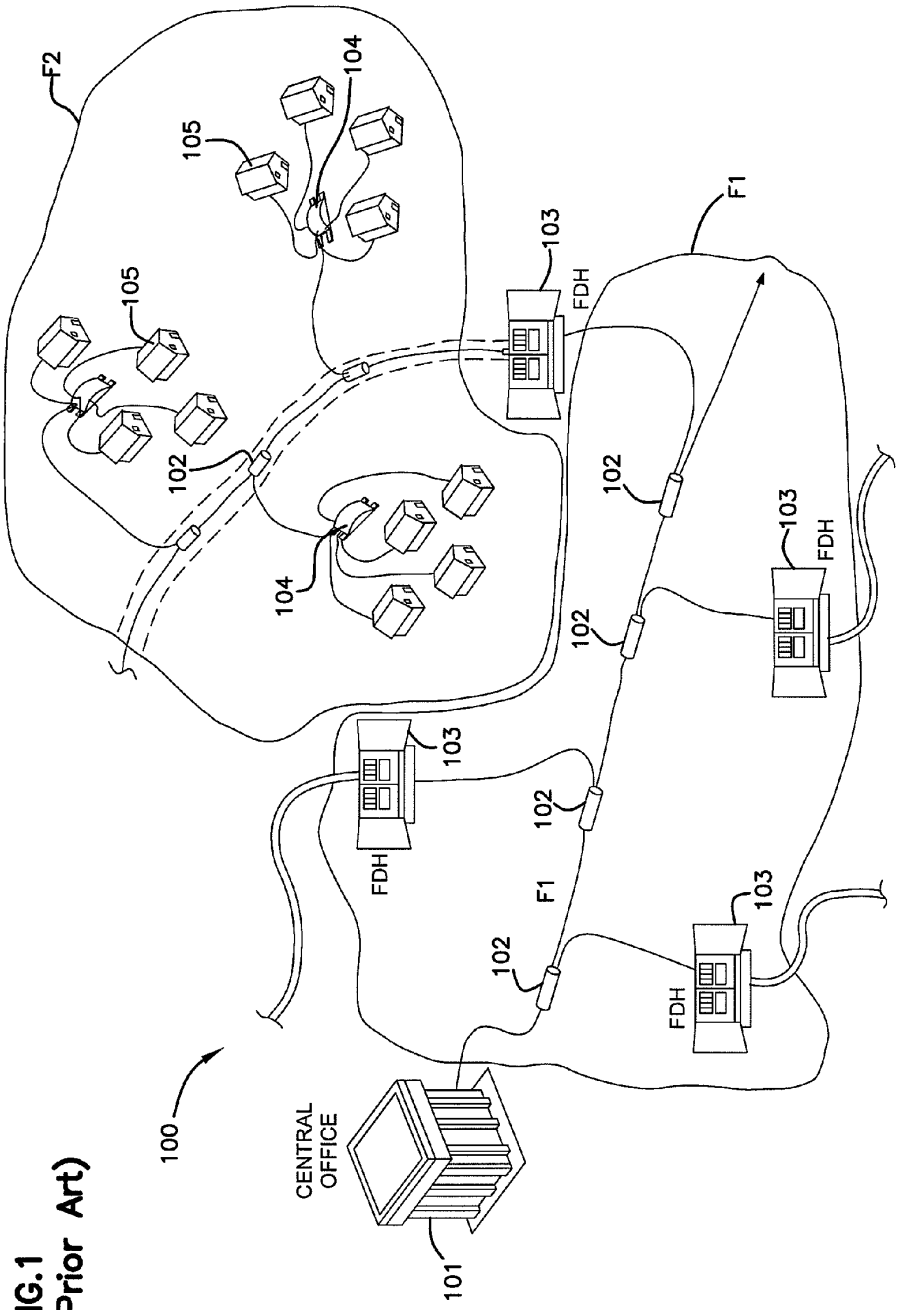

FIG.1
(Prior Art)

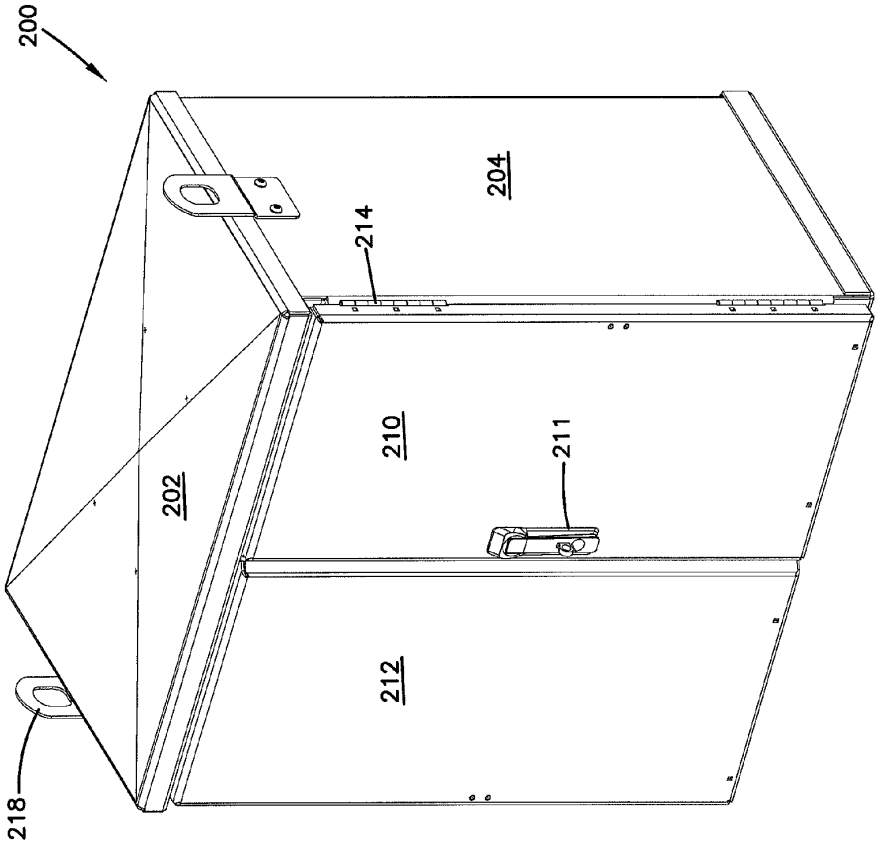

FIG.2A

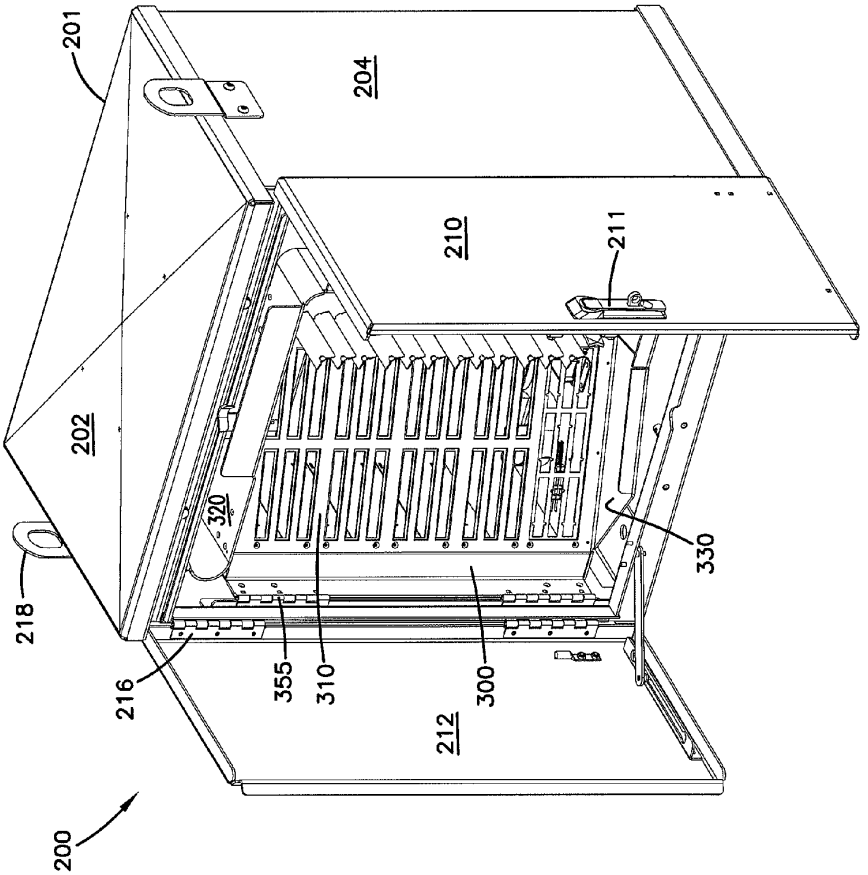

FIG.2B

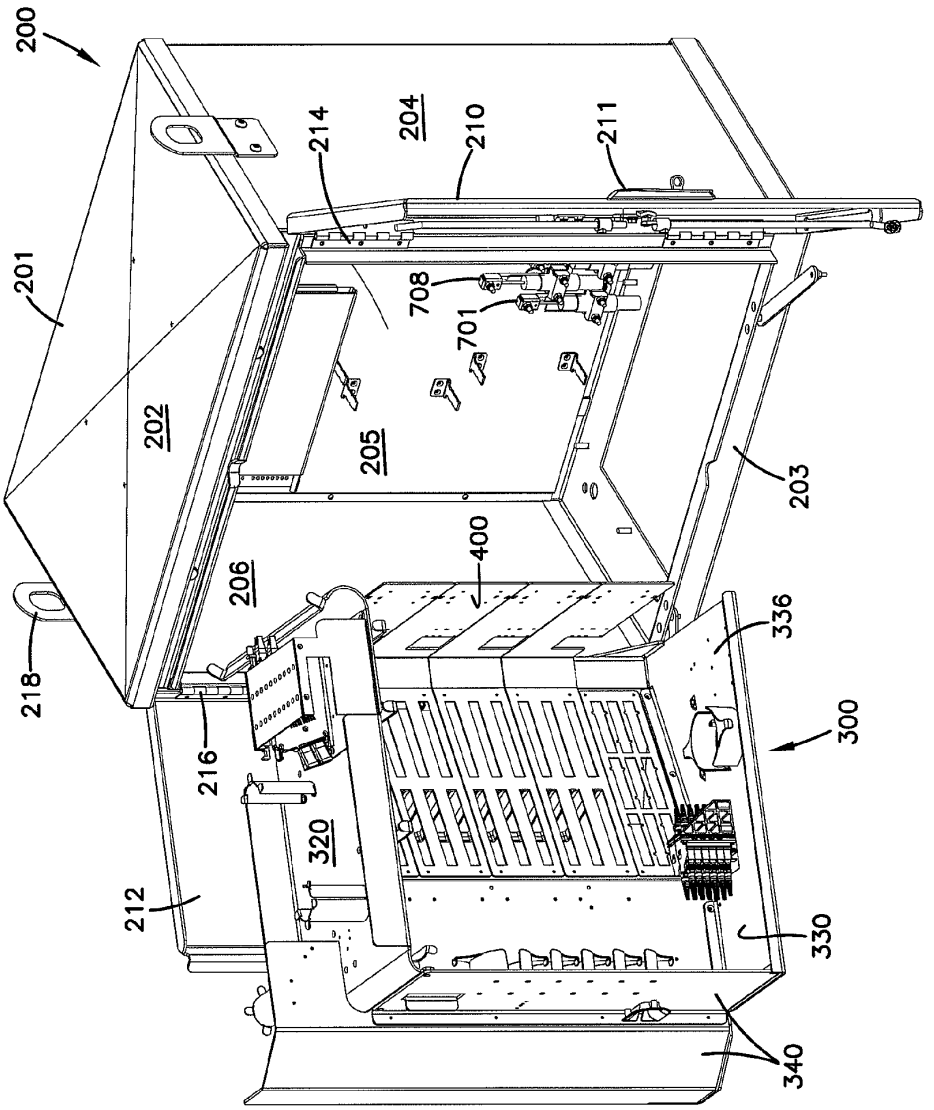
200
201
202
203
204
205
206
210
211
212
214
216
218
300
320
330
336
340
400
701
708

FIG.2C

FIG.3

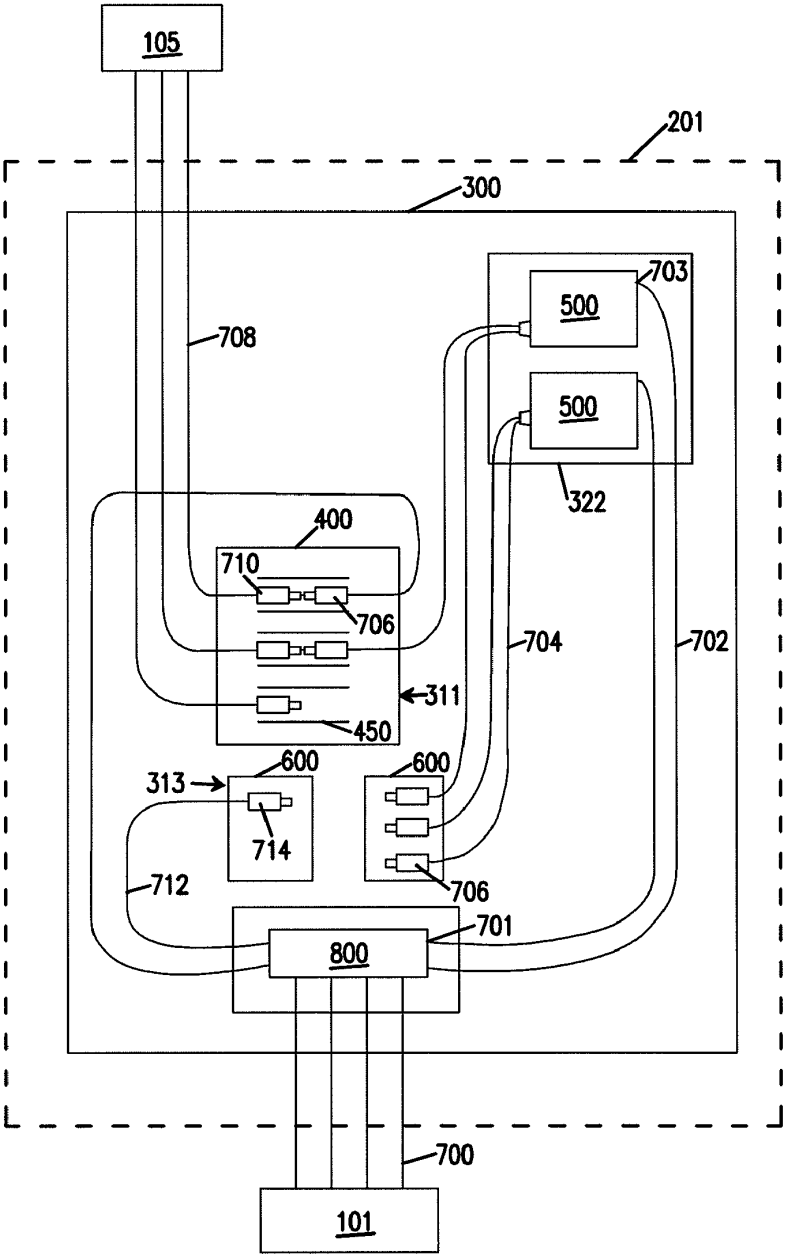
105
201
300
703
500
500
708
322
400
710
706
704
702
311
450
600
600
313
714
712
706
701
800
700
101

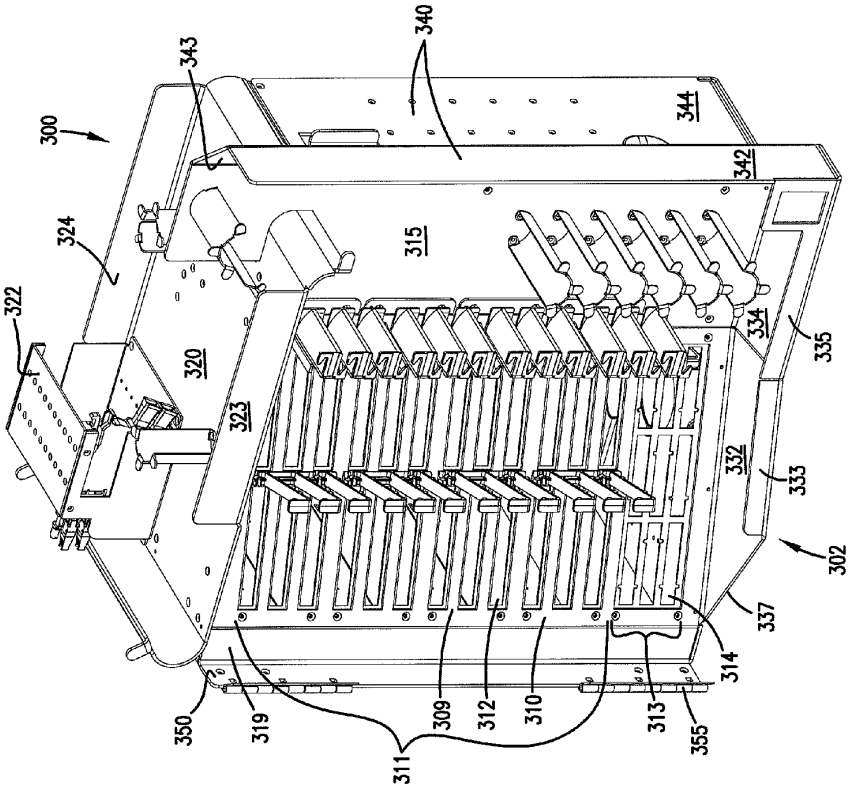
300
322
324
320
323
343
340
315
344
342
334
335
332
333
302
337
314
313
355
310
312
309
311
319
350

FIG.4

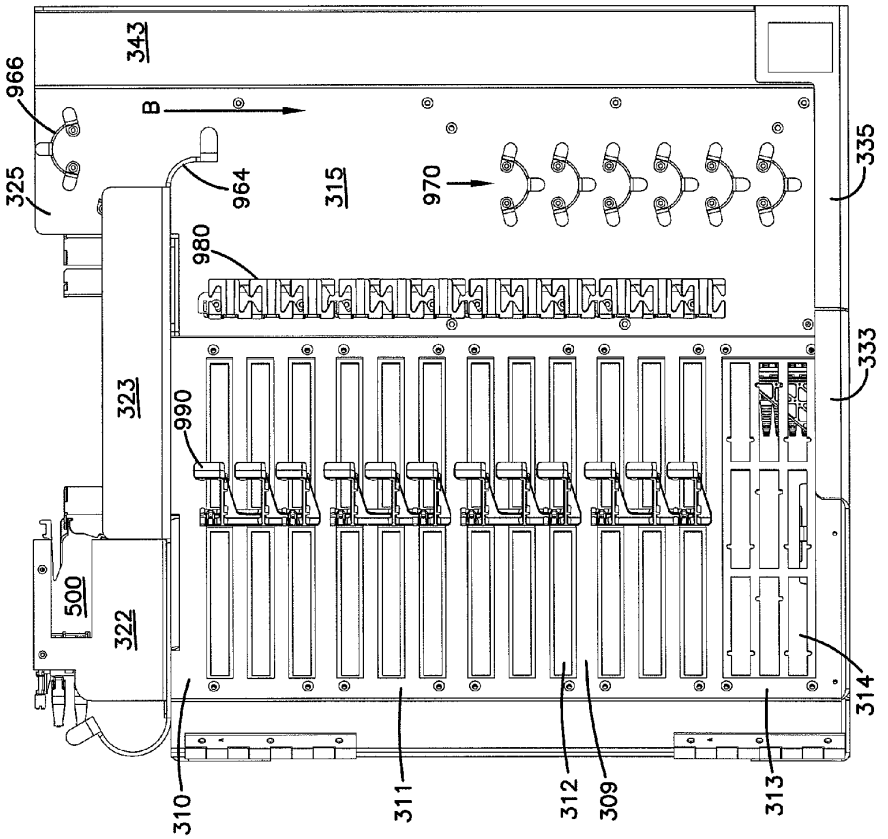
343
966
B
325
964
315
970
335
980
333
323
990
500
322
314
310
311
312
309
313

FIG.5

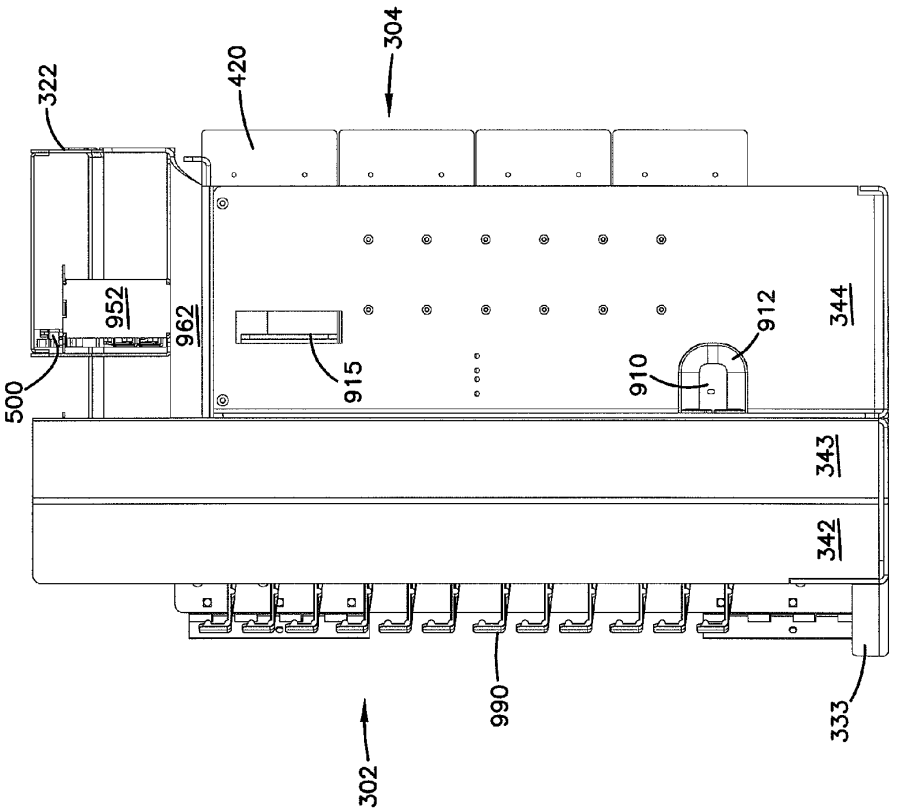

FIG.6

FIG.7

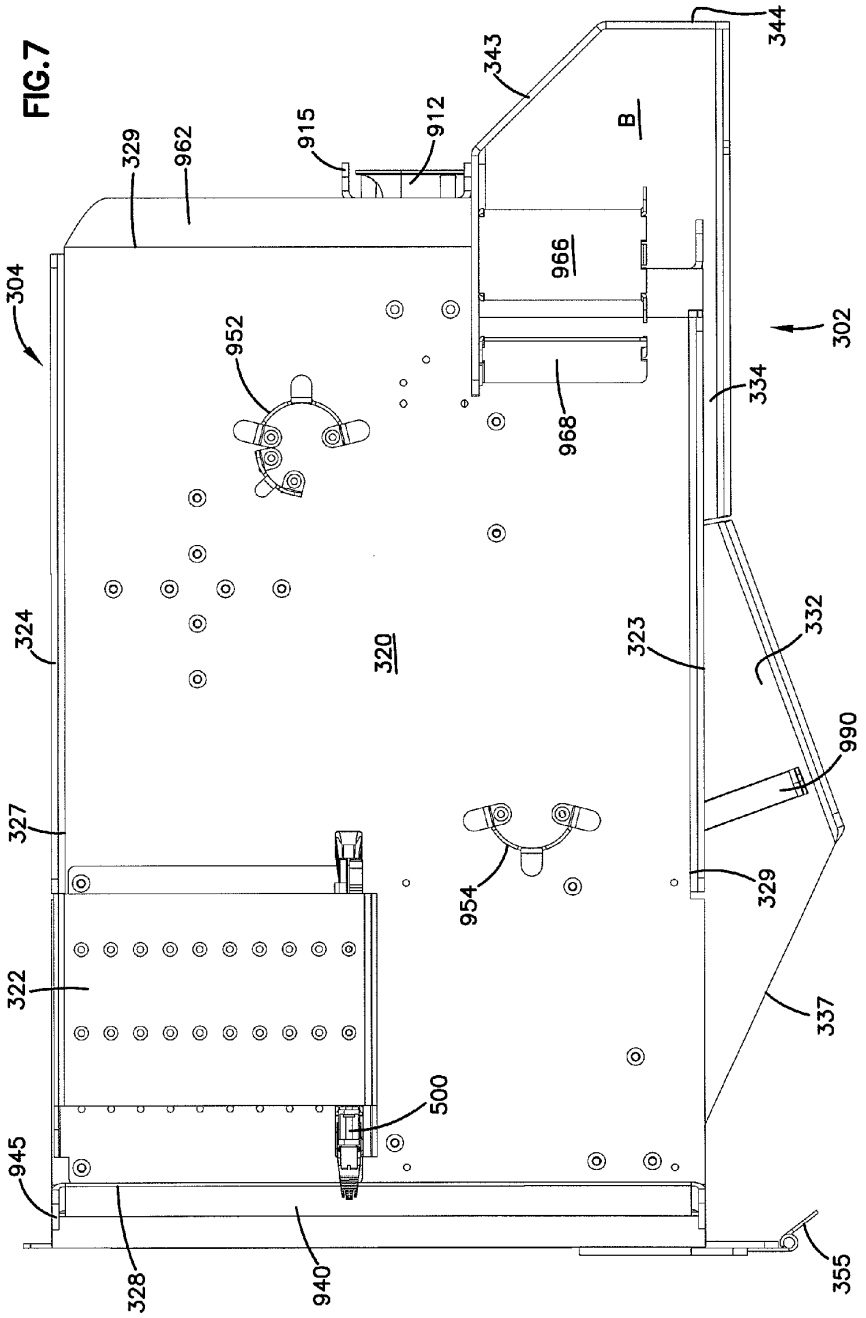
344
343
B
912
915
962
329
304
966
302
952
334
968
324
320
323
332
990
327
954
329
322
337
500
945
328
940
355

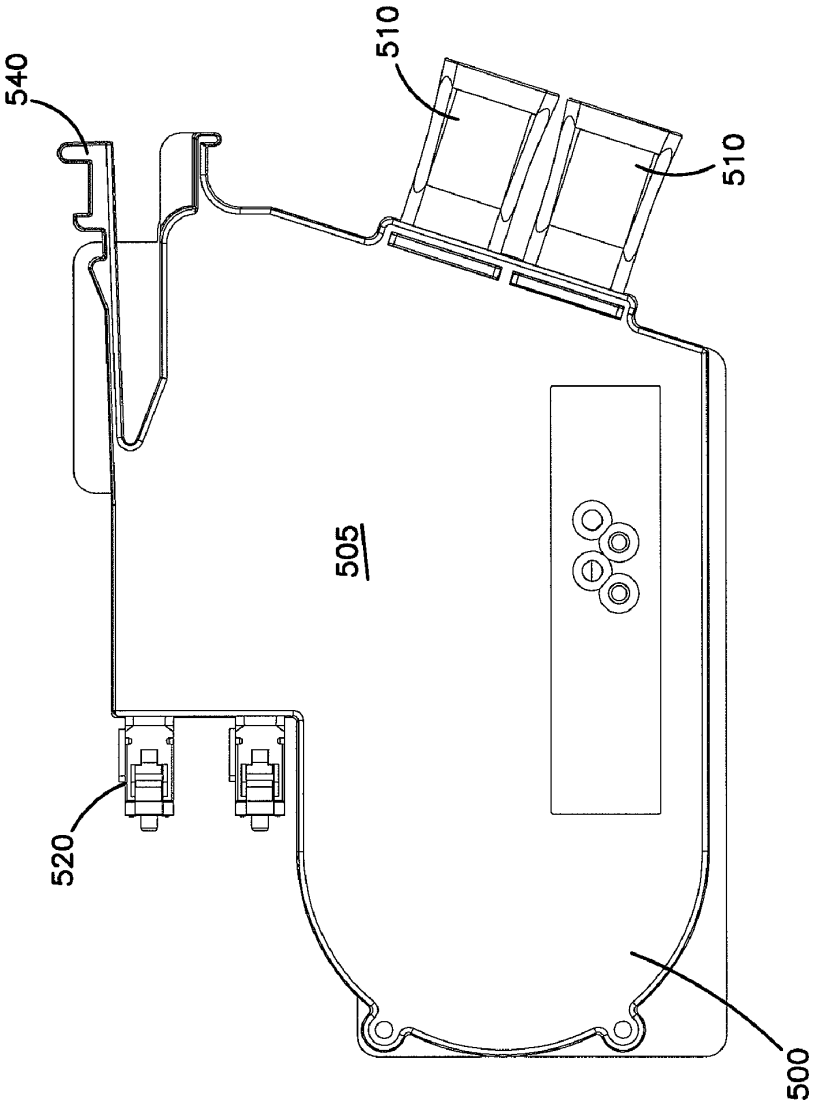

FIG.8A

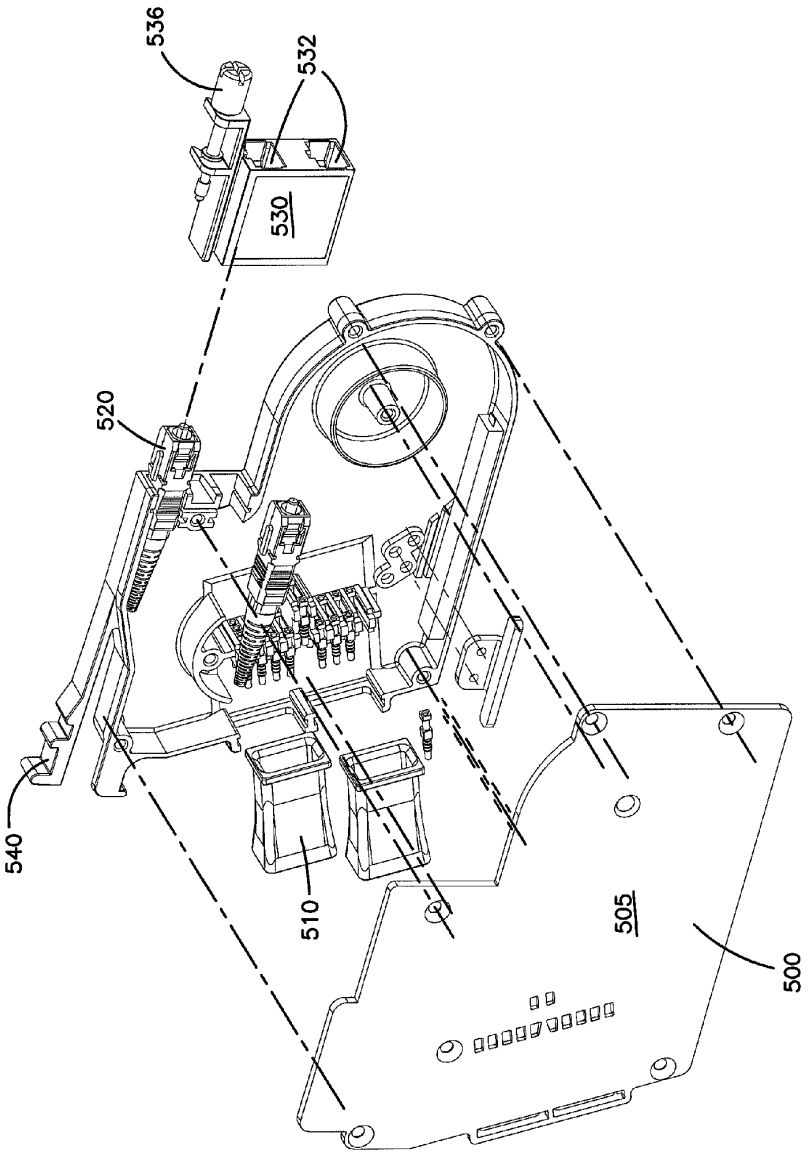

FIG.8B

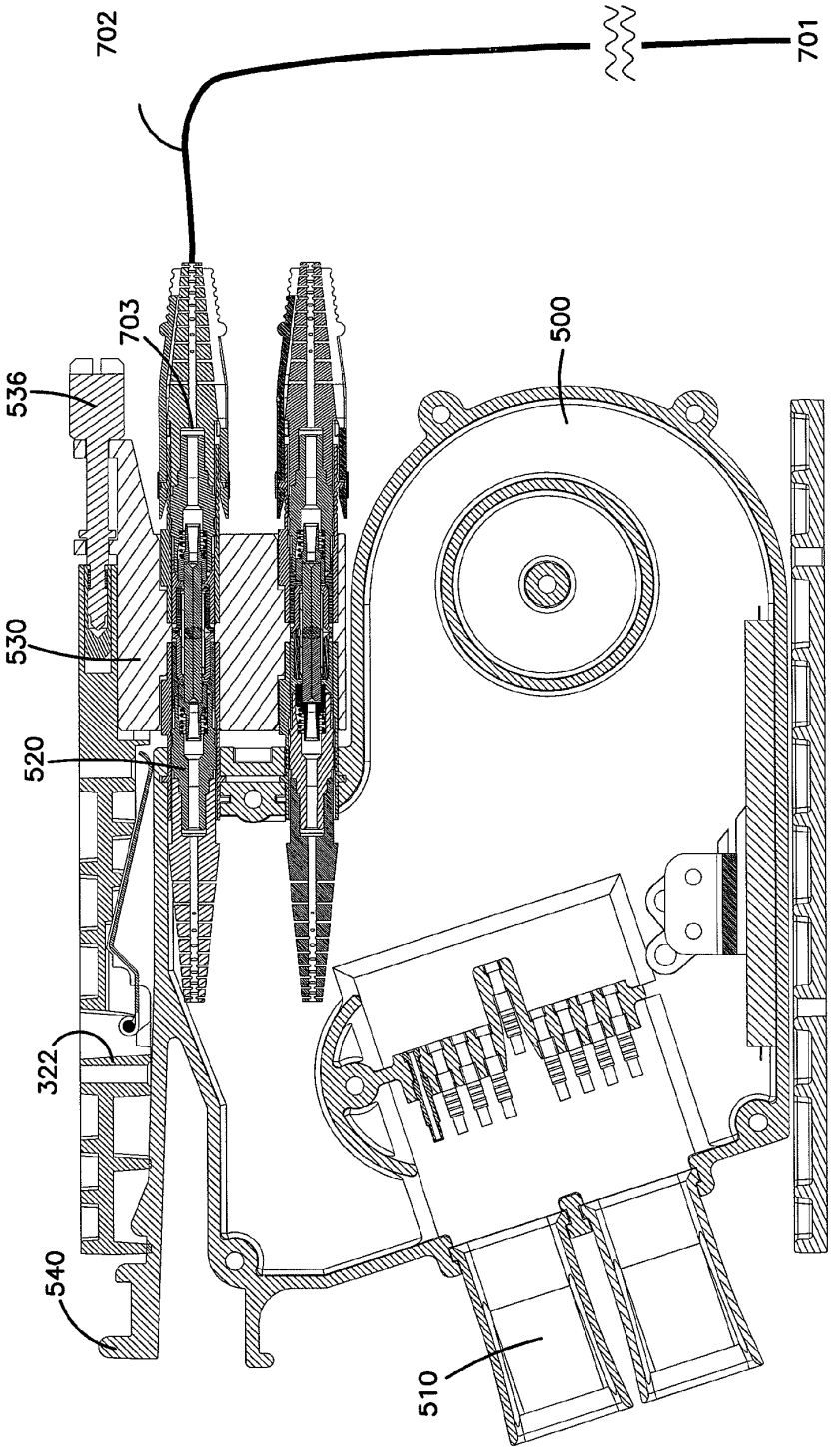

FIG.8C

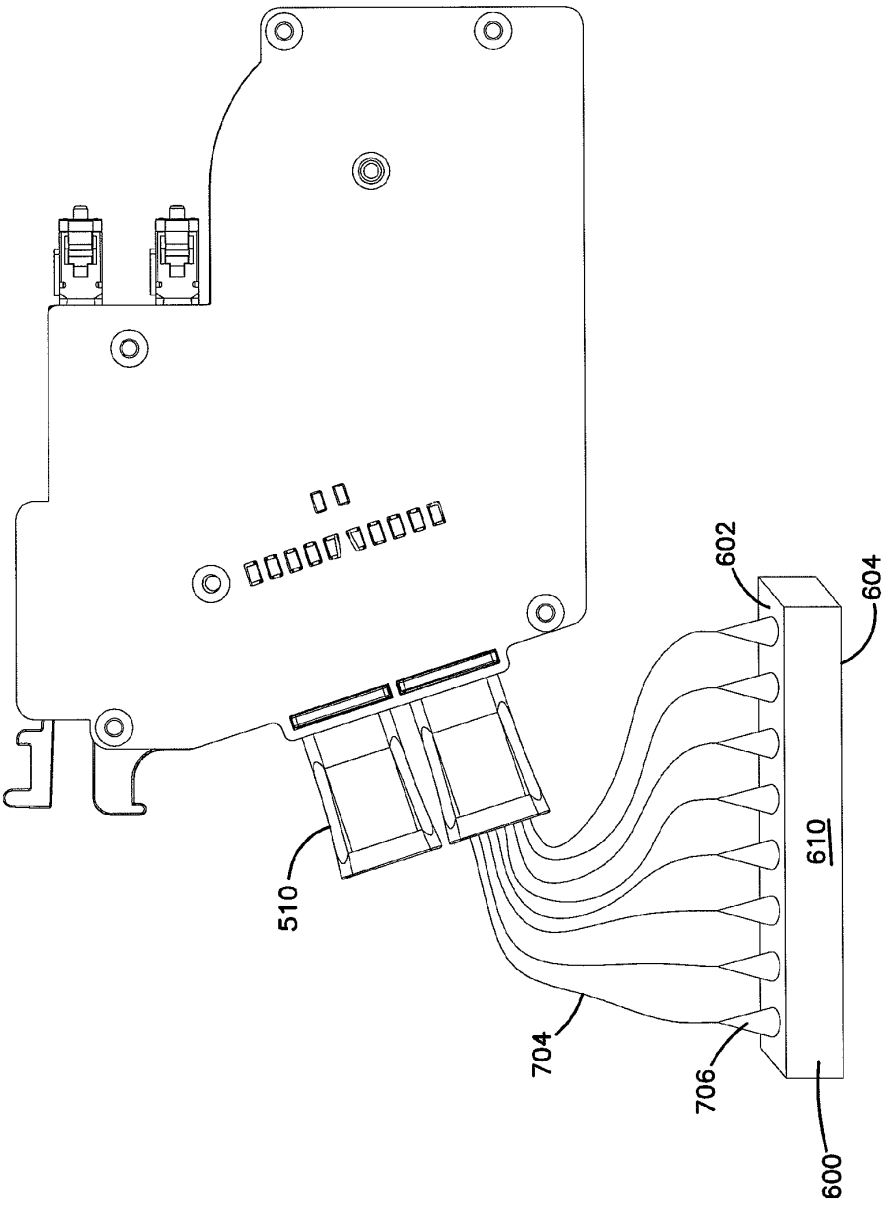

FIG.9

FIG.10

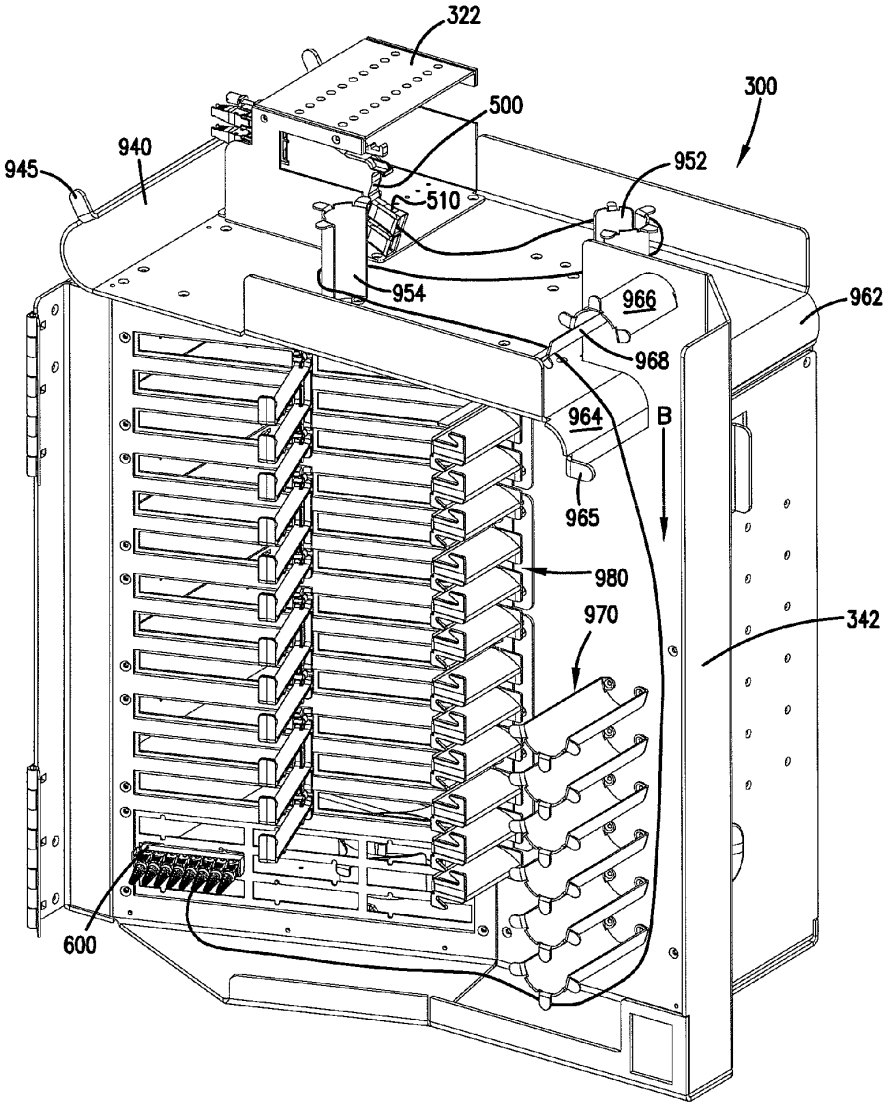
322
500
300
940
945
952
510
954
966
962
968
964
B
965
980
970
342
600

FIG.11

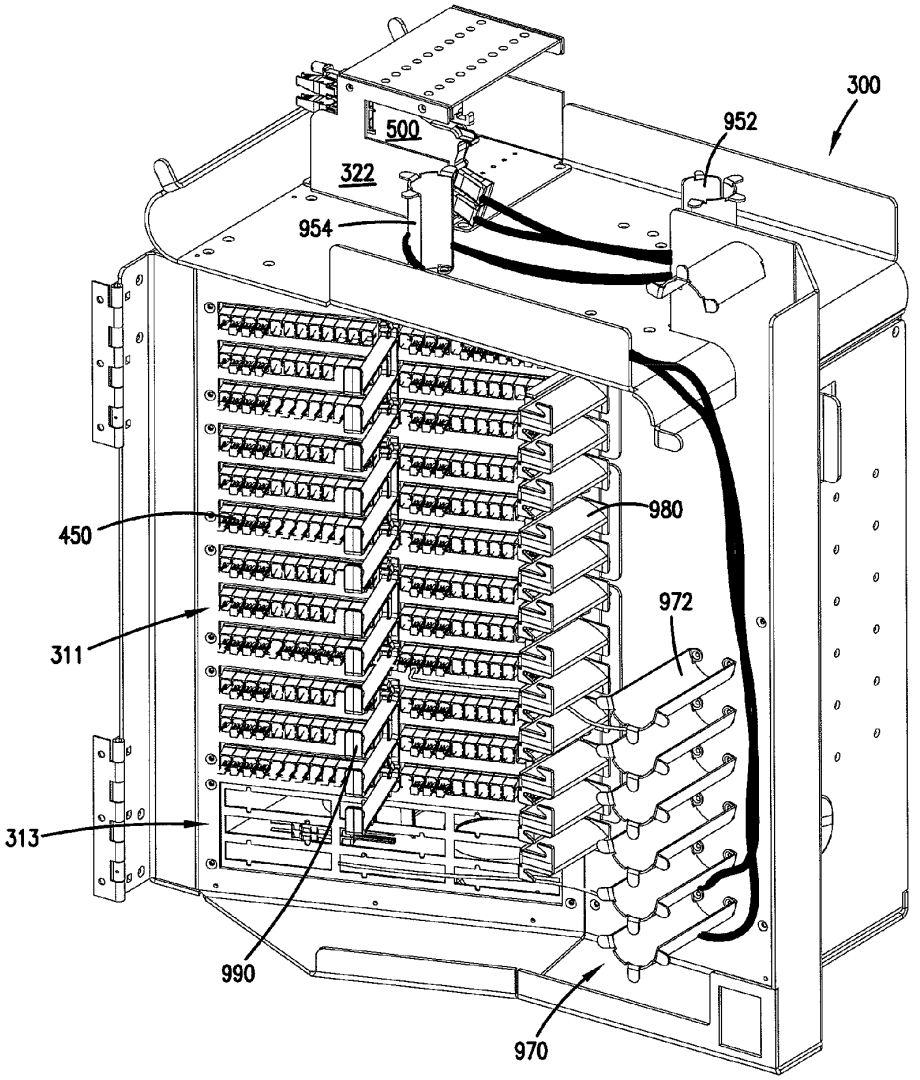

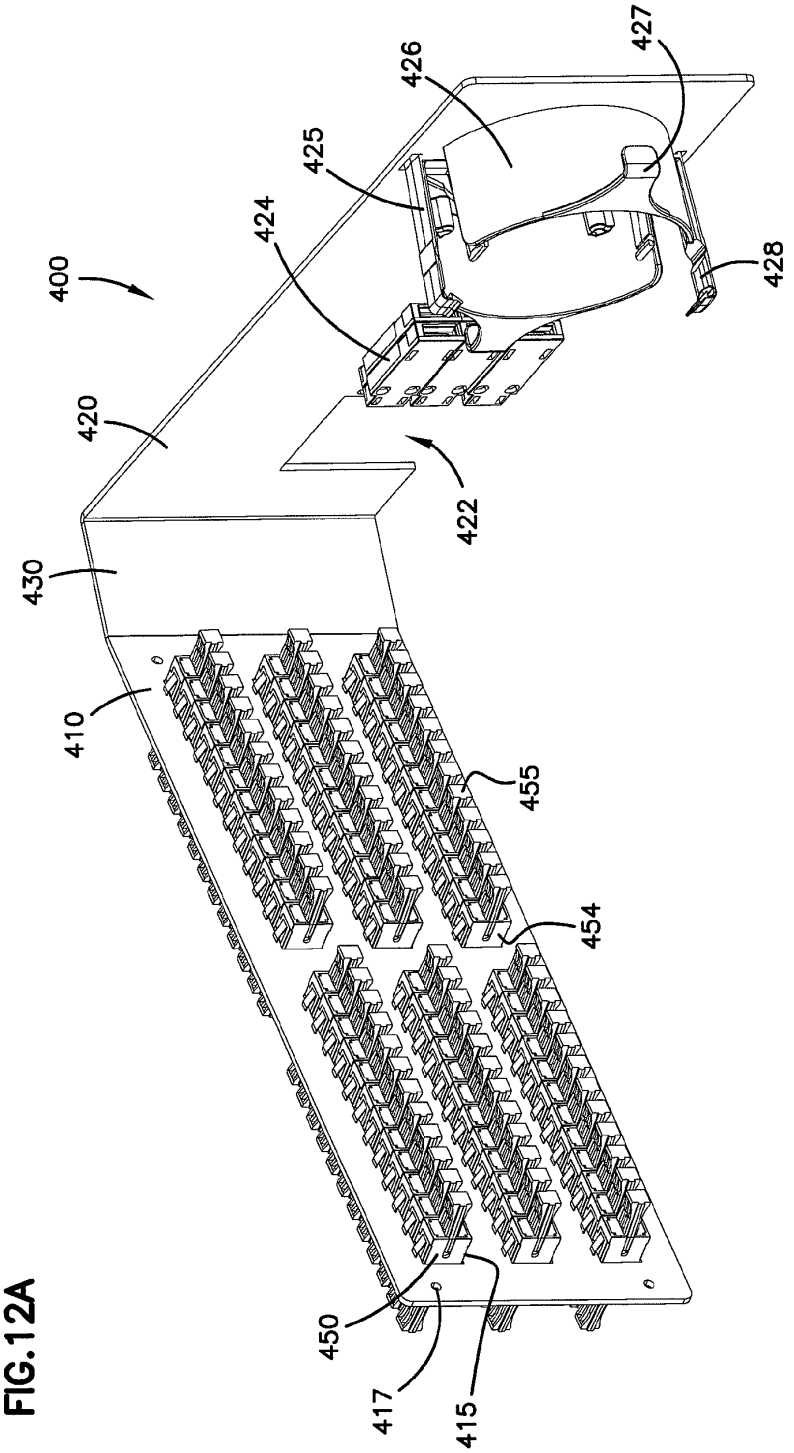

FIG.12A

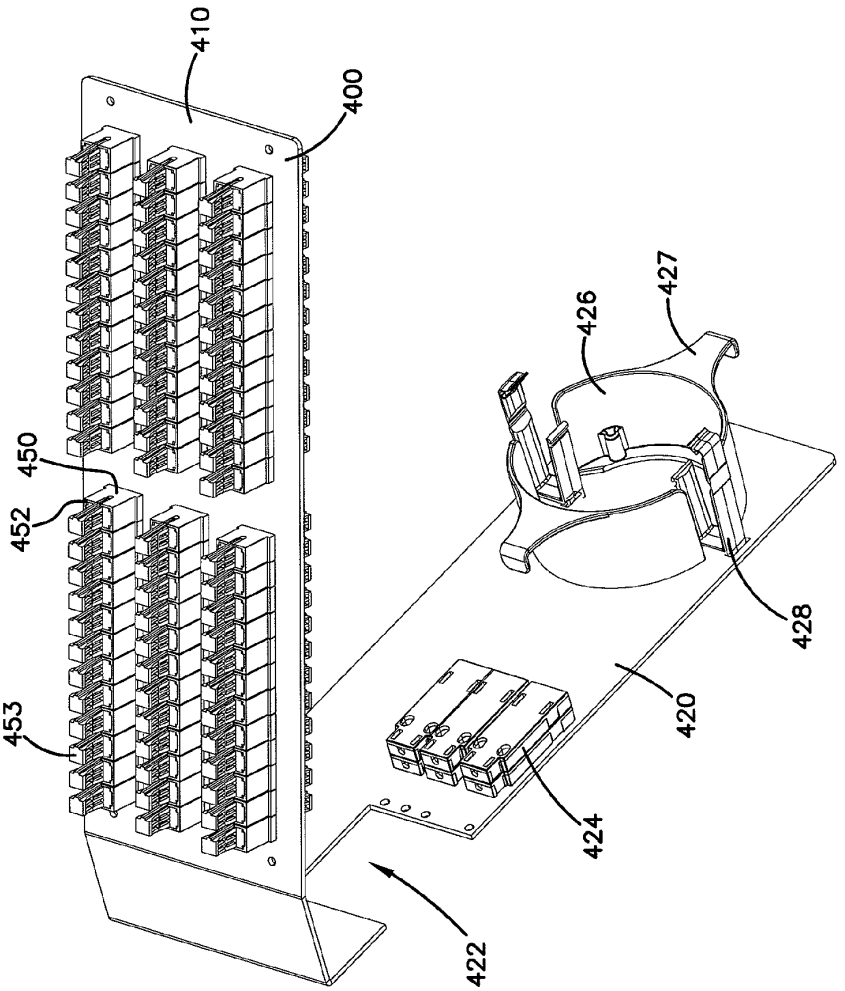

FIG. 12B

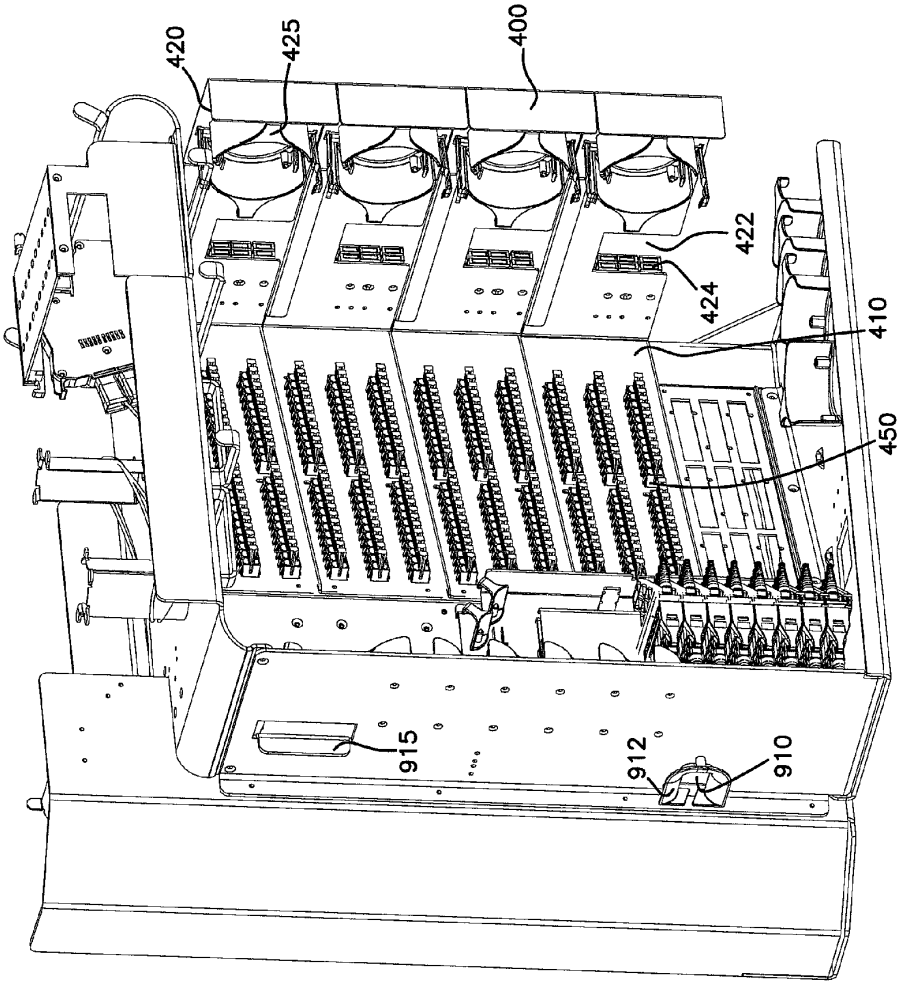

FIG. 13

FIG.14

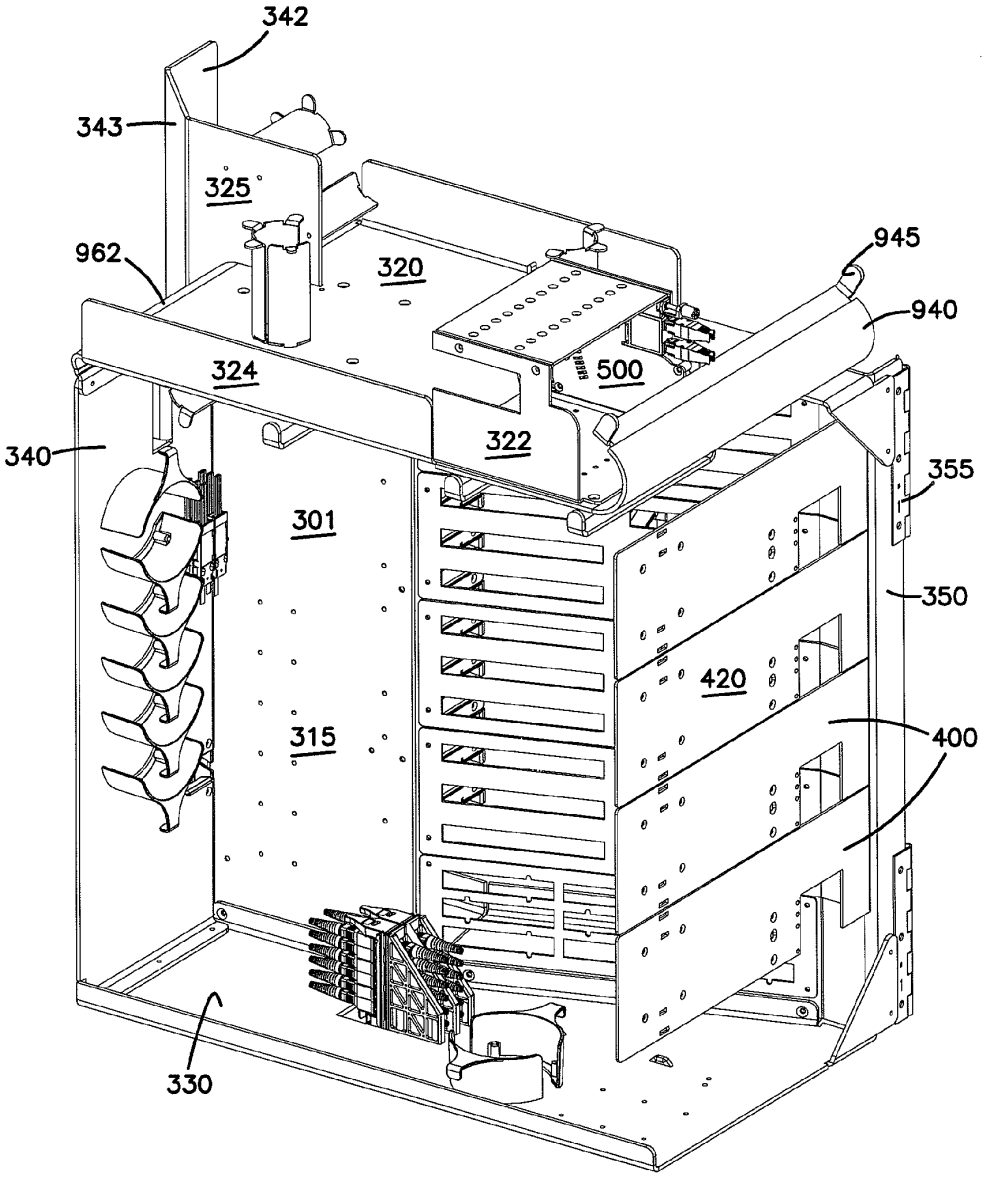
342
343
325
962
320
945
940
324
500
322
340
355
301
350
420
315
400
330

FIG.15

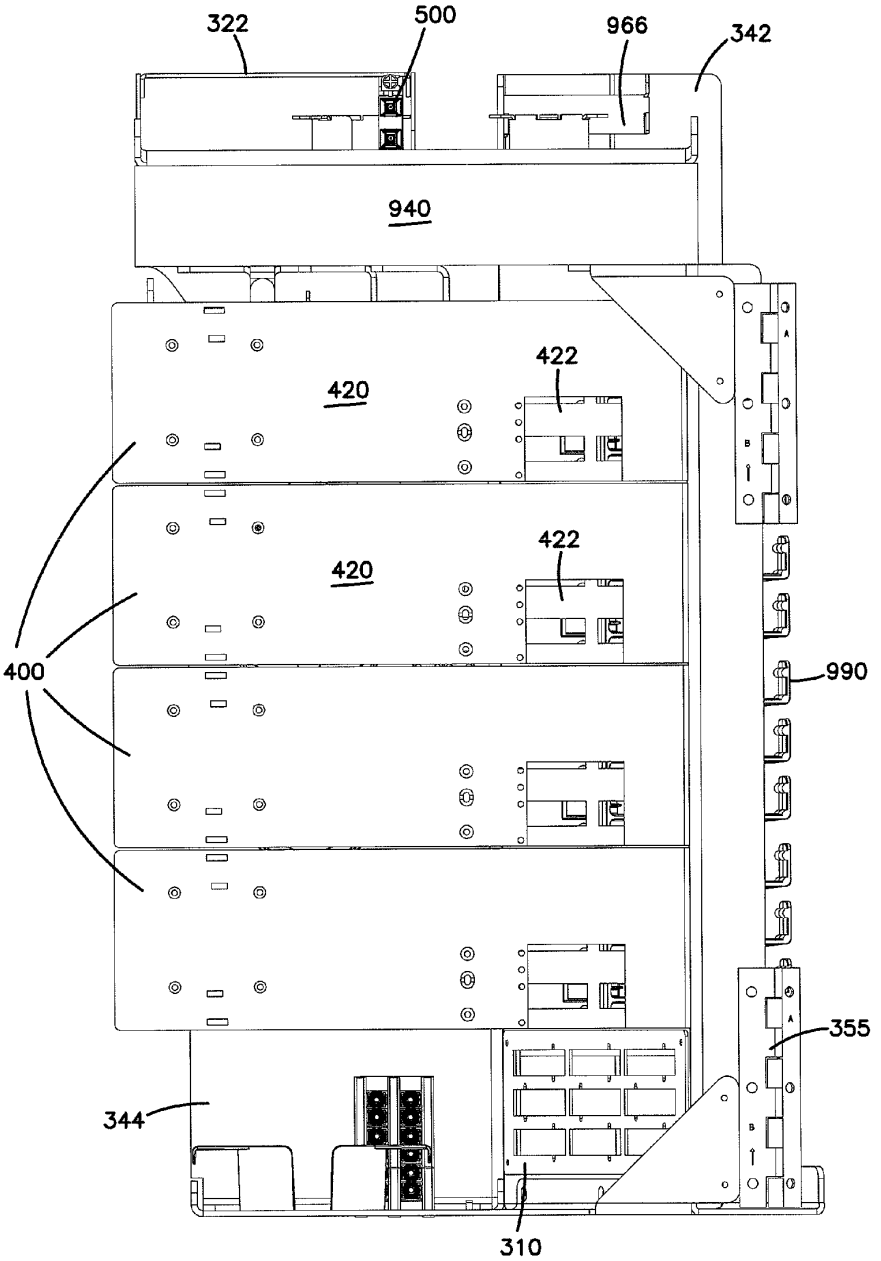

FIG.16

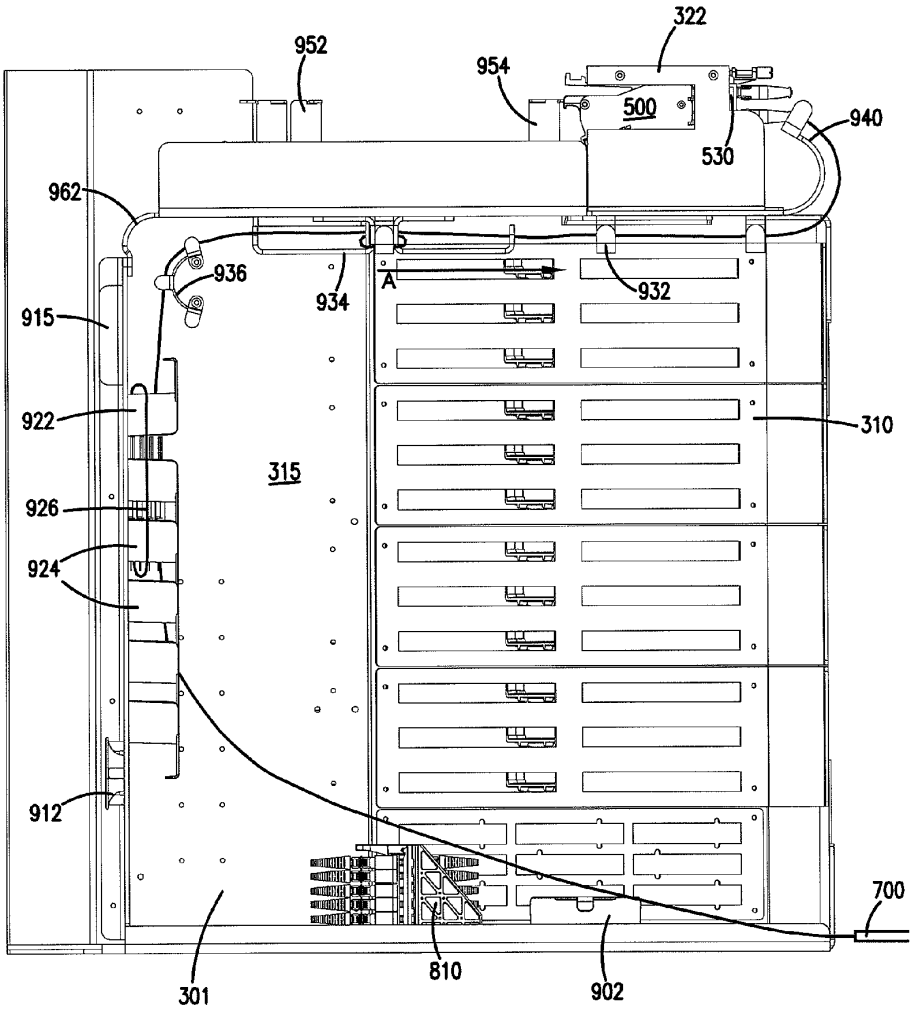
322
952
954
500
940
530
962
936
934
A
932
915
922
310
315
926
924
912
700
810
902
301

FIG.17

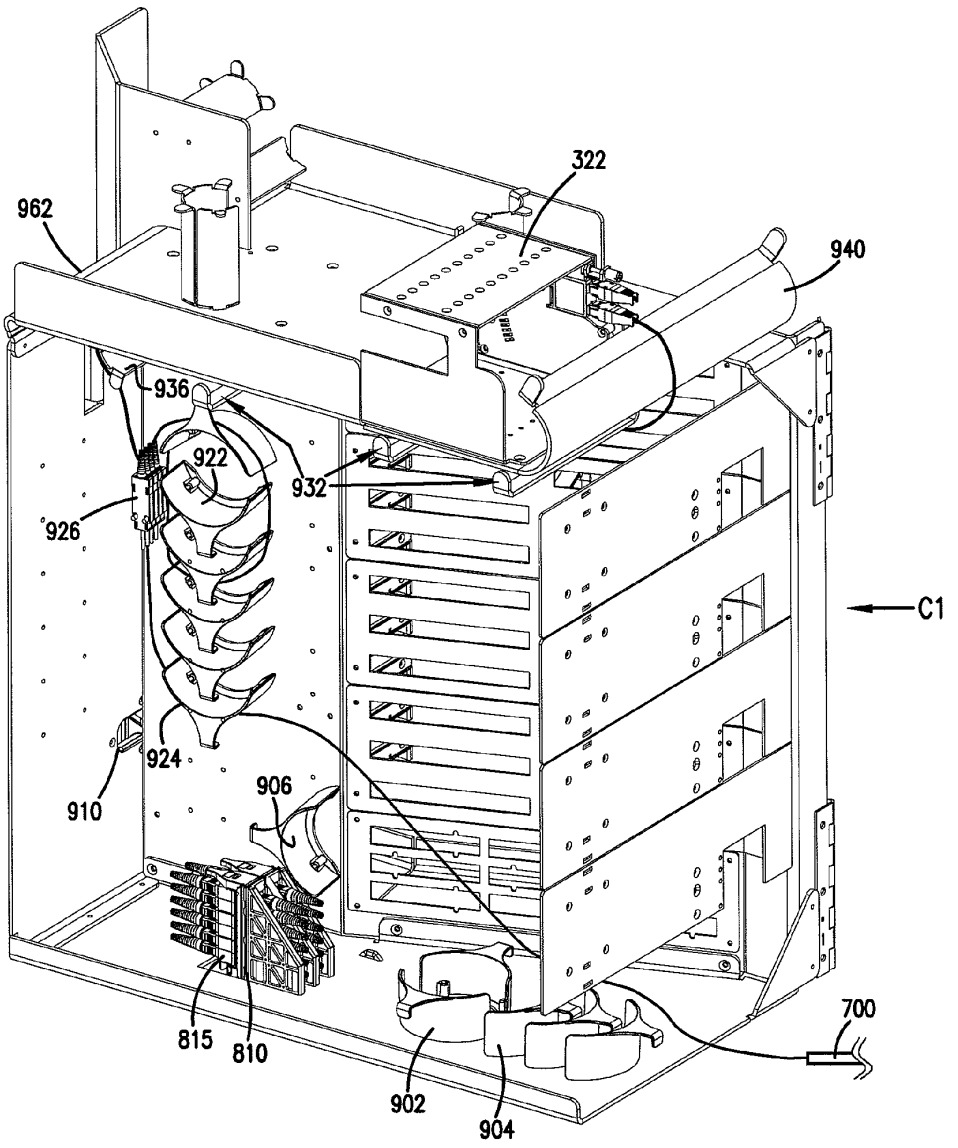

FIG.18

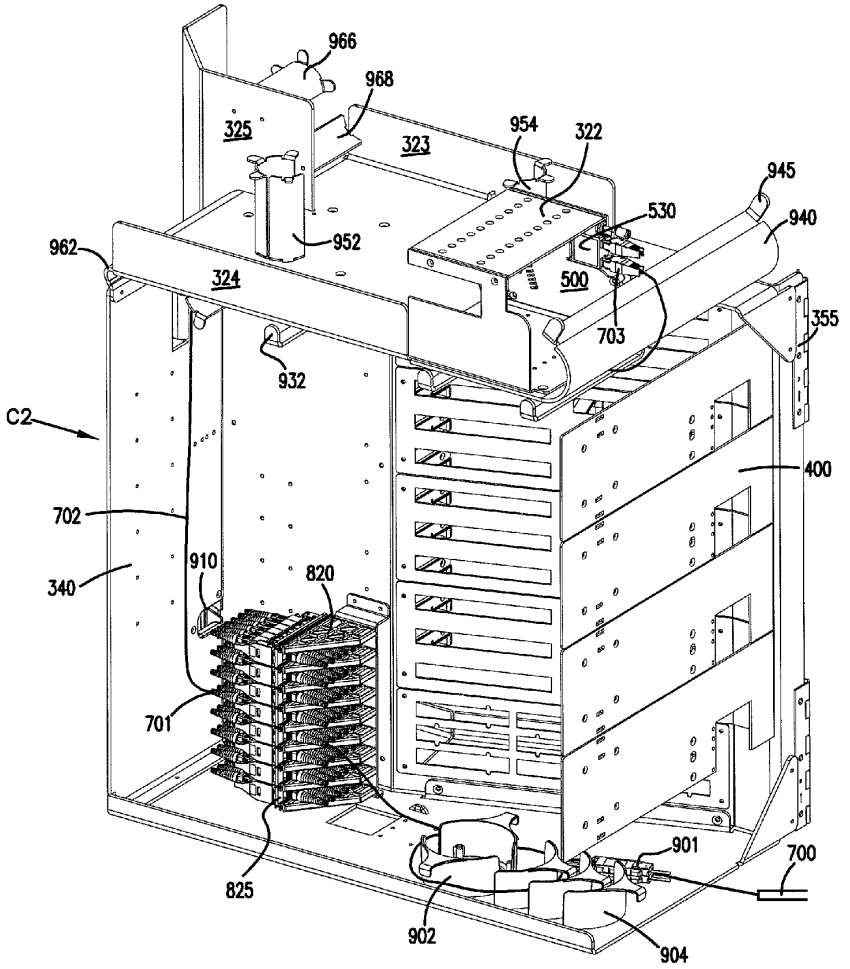
966
968
325
323
954
322
945
530
940
962
952
324
500
703
355
932
C2
400
702
910
820
340
701
901
700
825
902
904

FIG.19

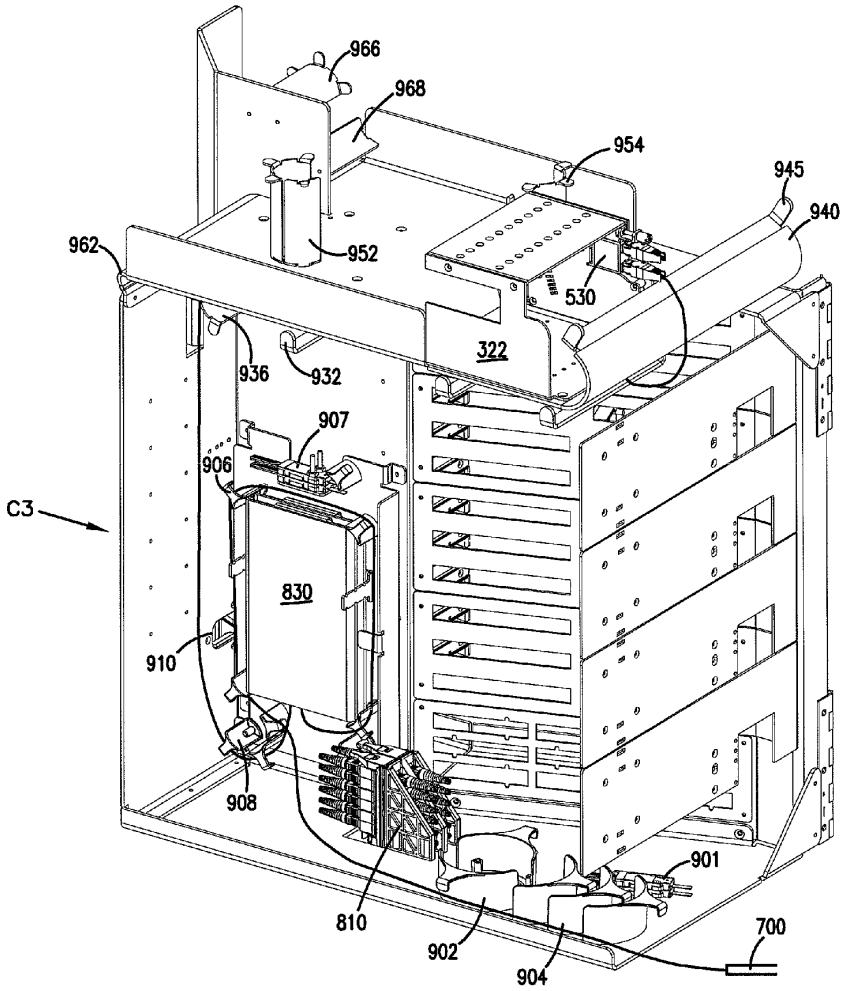
966
968
954
945
940
962
952
530
322
936
932
907
906
C3
830
910
908
901
810
902
904
700

FIBER DISTRIBUTION HUB WITH SWING FRAME AND MODULAR TERMINATION PANELS

CROSS REFERENCE TO RELATED APPLICATIONS

This application is a continuation of application Ser. No. 11/354,286, filed Feb. 13, 2006, now U.S. Pat. No. 7,720,343; which application is incorporated herein by reference in its entirety.

BACKGROUND

Passive optical networks are becoming prevalent in part because service providers want to deliver high bandwidth communication capabilities to customers. Passive optical networks are a desirable choice for delivering high-speed communication data because they may not employ active electronic devices, such as amplifiers and repeaters, between a central office and a subscriber termination. The absence of active electronic devices may decrease network complexity and/or cost and may increase network reliability.

FIG. **1** illustrates a network **100** deploying passive fiber optic lines. As shown, the network **100** can include a central office **101** that connects a number of end subscribers **105** (also called end users **105** herein) in a network. The central office **101** can additionally connect to a larger network such as the Internet (not shown) and a public switched telephone network (PSTN). The network **100** can also include fiber distribution hubs (FDHs) **103** having one or more optical splitters (e.g., 1-to-8 splitters, 1-to-16 splitters, or 1-to-32 splitters) that generate a number of individual fibers that may lead to the premises of an end user **105**. The various lines of the network **100** can be aerial or housed within underground conduits.

The portion of the network **100** that is closest to central office **101** is generally referred to as the F**1** region, where F**1** is the "feeder fiber" from the central office **101**. The portion of the network **100** closest to the end users **105** can be referred to as an F**2** portion of network **100**. The network **100** includes a plurality of break-out locations **102** at which branch cables are separated out from the main cable lines. Branch cables are often connected to drop terminals **104** that include connector interfaces for facilitating coupling of the fibers of the branch cables to a plurality of different subscriber locations **105**.

Splitters used in an FDH **103** can accept a feeder cable F**1** having a number of fibers and may split those incoming fibers into, for example, 216 to 432 individual distribution fibers that may be associated with a like number of end user locations. In typical applications, an optical splitter is provided prepackaged in an optical splitter module housing and provided with a splitter output in pigtails that extend from the module. The splitter output pigtails are typically connectorized with, for example, SC, LC, or LX.5 connectors. The optical splitter module provides protective packaging for the optical splitter components in the housing and thus provides for easy handling for otherwise fragile splitter components. This modular approach allows optical splitter modules to be added incrementally to FDHs **103** as required.

SUMMARY

Certain aspects of the disclosure relate to fiber optic cable systems.

In example systems, a fiber distribution system includes one or more fiber distribution hubs (FDHs) that provide an interface between the central office and the subscribers.

Certain aspects of the invention relate to cable routing configurations.

Other aspects of the invention relate to enhanced access and scalability through the use of modular subscriber termination components and modular splitters.

A variety of additional inventive aspects will be set forth in the description that follows. The inventive aspects can relate to individual features and to combinations of features. It is to be understood that both the forgoing general description and the following detailed description are exemplary and explanatory only and are not restrictive of the broad inventive concepts upon which the embodiments disclosed herein are based.

BRIEF DESCRIPTION OF THE DRAWINGS

FIG. **1** shows a passive fiber optic network;

FIG. **2**A is a front perspective view of an example fiber distribution hub having a cabinet with front doors shown in a closed position;

FIG. **2**B is a front perspective view of the fiber distribution hub of FIG. **2**A with the cabinet doors shown in an open position;

FIG. **2**C is a front perspective view of the fiber distribution hub of FIG. **2**A with a swing frame swung out of the cabinet;

FIG. **3** is a schematic diagram showing an example cable routing scheme for the fiber distribution hub of FIG. **2**A;

FIG. **4** is a front perspective view of the swing frame of FIG. **2**C isolated from the fiber distribution hub;

FIG. **5** is a front side view of the swing frame of FIG. **4**;

FIG. **6** is a right side view of the swing frame of FIG. **4**;

FIG. **7** is a top view of the swing frame of FIG. **4**;

FIGS. **8**A-**8**C show one example of a splitter module of the distribution hub of FIG. **2**A;

FIG. **9** shows an example splitter module having eight output fibers including connectorized ends secured to a storage module;

FIG. **10** depicts one example cable/fiber route from a splitter module mounted on a swing frame to a storage module mounted on the swing frame;

FIG. **11** depicts on example cable/fiber route from a splitter module mounted on a swing frame to a termination module mounted on the swing frame;

FIGS. **12**A and **12**B are front and rear perspective views of an example termination module of the distribution hub of FIG. **2**A;

FIG. **13** is a rear perspective view of the swing frame of FIG. **4**;

FIG. **14** is another perspective view of the swing frame of FIG. **4**;

FIG. **15** is a left side view of the swing frame of FIG. **4**;

FIG. **16** is a rear view of a swing frame including example interface devices and cable management devices mounted at the rear side of a swing frame;

FIG. **17** is a rear perspective view depicting one example configuration of interface devices and cable management devices on a swing frame;

FIG. **18** is a rear perspective view depicting another example configuration of interface devices and cable management devices; and

FIG. **19** is a rear perspective view depicting yet another example configuration of interface devices and cable management devices.

DETAILED DESCRIPTION

Referring now to FIGS. **2**-**7**, an example fiber distribution hub (FDH) **200** in accordance with the principles of the

present disclosure is shown. The FDH **200** includes a cabinet **201** that houses internal components. The cabinet **201** includes openings through which a feeder cable (e.g., or F**1** cable) **700** and a subscriber cable **708** enter and exit the cabinet **201** (see FIG. **2**C). A swing frame **300** is pivotably mounted on hinges **355** within the cabinet **201**. The swing frame **300** includes bulkhead **301** that divides the swing frame **300** into a front portion **302** (see FIG. **4**) and a back portion **304** (see FIG. **2**C). The bulkhead **301** includes a main panel **310** having a termination region **311** and a storage region **313**. Generally, at least one termination module **400** (see FIGS. **13**A and **13**B) is provided at the termination region **311** and at least one storage module **600** (see FIG. **9**) is provided at the storage region **313**. In some embodiments, the bulkhead **301** also includes a secondary panel **315** positioned adjacent the main panel **310** and configured for cable management. One or more feeder cable interfaces **800** can be positioned within the rear portion of the swing frame **300**. At least one splitter module housing **322** accommodating one or more splitter modules **500** is positioned at the top of the swing frame **300**.

FIG. **3** is a schematic diagram showing an example cable routing scheme for the FDH **200**. The FDH **200** generally administers connections at a termination panel between incoming fiber and outgoing fiber in an Outside Plant (OSP) environment. As the term is used herein, "a connection" between fibers includes both direct and indirect connections. Examples of incoming fibers include the feeder cable fibers that enter the cabinet and intermediate fibers (e.g., connectorized pigtails extending from splitters and patching fibers/jumpers) that connect the feeder cable fiber to the termination panel. Examples of outgoing fibers include the subscriber cable fibers that exit the cabinet and any intermediate fibers that connect the subscriber cable fibers to the termination panel. The FDH **200** provides an interconnect interface for optical transmission signals at a location in the network where operational access and reconfiguration are desired. For example, as noted above, the FDH **200** can be used to split the feeder cables and terminate the split feeder cables to distribution cables routed to subscriber locations. In addition, the FDH **200** is designed to accommodate a range of alternative sizes and fiber counts and support factory installation of pigtails, fanouts and splitters.

As shown at FIG. **3**, a feeder cable **700** is initially routed into the FDH **200** through the cabinet **201** (e.g., typically through the back or bottom of the cabinet **201** as shown in FIG. **2**C). In certain embodiments, the fibers of the feeder cable **700** can include ribbon fibers. An example feeder cable **700** may include twelve to forty-eight individual fibers connected to a service provider central office **101**. In some embodiments, after entering the cabinet **201**, the fibers of the feeder cable **700** are routed to a feeder cable interface **800** (e.g., fiber optic adapter modules, a splice tray, etc.). At the feeder cable interface **800**, one or more of the fibers of the feeder cable **700** are individually connected to separate splitter input fibers **702**. The splitter input fibers **702** are routed from the feeder cable interface **800** to the splitter module housing **322**. At the splitter module housing **322**, the splitter input fibers **702** are connected to separate splitter modules **500**, wherein the input fibers **702** are each split into multiple pigtails **704**, each having connectorized ends **706**. In other embodiments, however, the fibers of the feeder cable **700** can be connectorized and can be routed directly to the splitter modules **500** thereby bypassing or eliminating the need for an intermediate feeder cable interface **800**.

When the pigtails **704** are not in service, the connectorized ends **706** can be temporarily stored on a storage module **600** that is mounted at the storage region **313** of the swing frame **300**. When the pigtails **704** are needed for service, the pigtails **704** are routed from the splitter modules **500** to a termination module **400** that is provided at the termination region **311** of the swing frame **300**. At the termination module **400**, the pigtails **704** are connected to the fibers of a distribution cable **708**. The termination panel is the dividing line between the incoming fibers and the outgoing fibers. A typical distribution cable **708** forms the F**2** portion of a network (see FIG. **1**) and typically includes a plurality of fibers (e.g., 144, 216 or 432 fibers) that are routed from the FDH **200** to subscriber locations **709**.

In some embodiments, one or more of the fibers of the feeder cable **700** are not connected to any of the splitter modules **500**. Rather, these fibers of the feeder cable **700** are connected to pass-through fibers **712** having connectorized ends **714**. The pass-through fibers **712** are connected to the termination modules **400**, without first connecting to the splitter modules **500**. By refraining from splitting a fiber **712**, a stronger signal can be sent to one of the subscribers. The connectorized ends **714** of the pass-through fibers **712** can be stored at the storage region **313** when not in use.

Referring back to FIGS. **2**A-**2**C, the cabinet **201** of the FDH **200** includes a top panel **202**, a bottom panel **203**, a right side panel **204**, a left side panel **206**, a back panel **205**, and at least one front door. In some embodiments, the at least one front door includes a right door **210** and a left door **212**. In one embodiment, the front doors **210**, **212** include a lock **211**. The at least one front door is pivotally mounted to the cabinet **201** using hinges **214**, **216** to facilitate access to the components mounted within the cabinet **201**.

In general, the cabinet **201** of the FDH **200** is configured to protect the internal components against rain, wind, dust, rodents and other contaminants. However, the cabinet **201** remains relatively lightweight for easy installation, and breathable to prevent accumulation of moisture in the unit. In some embodiments, an aluminum construction with a heavy powder coat finish also provides for corrosion resistance. In one example embodiment, the cabinet **201** is manufactured from heavy gauge aluminum and is NEMA-4X rated. In other embodiments, however, other materials can also be used.

In accordance with example embodiments, the FDH **200** is provided in pole mount or pedestal mount configurations. For example, as shown in FIG. **2**, loops **218** can be provided on the cabinet **201** for facilitating deployment of the cabinet **201** at a desired location. The loops **218** can be used to position the cabinet using a crane. In particular, the crane can lower the cabinet **201** into an underground region. In some embodiments, the loops **218** are removable or can be adjusted to not protrude from the top cabinet panel **202**.

Still referring to FIGS. **2**B-**2**C, the swing frame **300** of the FDH **200** includes a top panel **320**, a bottom panel **330**, a right side panel **340**, and a left side **341**. A hinge-mounting strip **350** is positioned at the left side **341** of the swing frame **300**. As depicted at FIG. **4**, the bulkhead **301** further includes a connecting panel **319** that connects the main panel **310** to the hinge-mounting strip **350**. As shown best at FIG. **4**, a portion **325** of the secondary panel **315** extends upwardly past the top panel **320** of the swing frame **300**. The bulkhead **301** extends vertically between the top and bottom panels **320**, **330**, and laterally between the right side panel **340** and the left side **341**.

In some embodiments, the hinge-mounting strip **350** of the swing frame **300** is mounted to the cabinet **201** of the FDH **200** using one or more hinges **355**. The hinges **355** enable the entirety of the swing frame **300**, including the termination modules **400**, the storage modules **600**, the feeder cable interface device **800**, and the splitter modules **500**, to be swung out of the front doors **210**, **212** of the cabinet **201** to enable access

to optical components in the rear portion **304** of the swing frame **300** for cleaning, testing, maintenance, additions, etc. Pivoting the swing frame **300** out of the cabinet **201** causes the right side panel **340** of the swing frame **300** to move away from the interior volume of the cabinet **201**. In some example embodiments, the swing frame **300** can be pivoted ninety degrees or more out of the cabinet **201**.

In some embodiments, the hinges **355** of the swing frame **300** are positioned to provide a single point of flex for the fiber cable routed to the swing frame **300**. This hinge point is constructed to control the fiber bend. In particular, the hinges **355** and cable management devices, which are discussed in greater detail herein, are designed to ensure that manufacture recommended bend radii are maintained when the swing frame **300** is opened or closed. In one embodiment, the cabinet **201** can be configured at a factory, or plant, so as to have cable bundles dressed around the hinges **355**. Preconfiguring the cabinet **201** reduces the chance that cabling will be done incorrectly.

When the swing frame **300** is in the open position, as shown in FIG. **2**C, components in the rear portion **304** of the swing frame **300** are accessible. For example, a rear side of the main panel **310** and a rear side of the secondary panel **315** are accessible. In addition, the splitter modules **500** located in the splitter module housing **322** (see FIG. **4**) are accessible through the open top of the swing frame **300** when the swing frame **300** is swung out of the cabinet **201**. In contrast, when the swing frame **300** is in the closed position (see FIG. **2**B), only components on the front portion **302** of the swing frame **300** are readily accessible.

In example embodiments, the swing frame **300** includes a release latch (not shown) that locks the swing frame **300** in a closed position within the cabinet **201** of the FDH **200** until the latch is actuated. Once the latch is actuated, the swing frame **300** can be pivoted out of the cabinet **201**. In addition, a pivoting locking member (not shown) can be mounted to rear side **304** of the swing frame **300** to hold the swing frame **300** in the open position.

Referring to FIGS. **4-5**, the storage region **313** of the swing frame **300** is located below the termination region **311**. In other embodiments, however, the storage region **313** can be above or adjacent to the termination region **311**. In general, the termination region **311** defines at least one rectangular opening **312** through which adapters **450** (see FIGS. **13**A-**13**B) from a termination module **400** extend. The termination modules **400** are described in greater detail herein. In the embodiment shown in FIG. **4**, the termination region **311** includes two columns of openings **312** with each column including twelve elongated slots. Strips **309** separate the openings **312** of each column and provide surface area for adhering labeling information (e.g., connector designation). The storage region **313** also defines one or more openings **314** into which storage modules **600** (see FIG. **9**) are mounted. The storage modules **600** are described in greater detail herein.

The bulkhead **301** bifurcates the bottom panel **330** into a front portion **331** (see FIG. **4**) and a rear portion **336** (see FIGS. **2**C and **14**). In general, the front portion **331** of the bottom panel **330** projects forwardly from the bulkhead **301**. In some embodiments, the front portion **331** is further divided into a first front portion **332** and a second front portion **334**. Each front portion **332**, **334** includes a flange **333**, **335**, respectively, that protrudes substantially perpendicular from the bottom panel **330**. The front portion **331** of the bottom panel **330** thereby forms a trough configured to retain slack or excess fiber from the storage region **313** or from the secondary panel **315**. Edge **337** of the first front portion **332** is angled to allow the swing frame **300** to pivot open without interference from the trough.

As best shown in FIGS. **4** and **6**, the bulkhead divides the side panel **340** into front and rear flanges **342**, **344**, respectively. The front flange **342** extends forwardly from the secondary panel **315** and the rear flange **344** extends rearwardly from the secondary panel **315**. The rear flange **344** extends from the bottom panel **330** to a bend limiter **962** extending from the top panel **320**. The front flange **342** extends from the bottom panel **330** past the top panel **320** to the protruding portion **325** of the secondary panel **315**. In some embodiments, the front flange **342** includes a forward portion **344** substantially parallel to the rear flange **344** and an angled portion **343** extending between the protruding portion **325** of the secondary panel **315** and the forward portion **344**.

As best shown in FIG. **7**, the top panel **320** of the swing frame **300** is substantially rectangular. The top panel **320** includes front and back edges **326**, **327**. Flanges **323**, **324** (see FIG. **4**) protrude upward from the edges **326**, **327**, respectively.

The top panel **320** also has a first end **328** adjacent side **341** and a second, opposite end **329** adjacent the side panel **340**. A bend radius limiter **940** extends upward from the first end **328**. In some embodiments, a portion of the end **329** of the top panel **320** defines a width of a channel B with the front flange **342** of the side panel **340**. The portion of the end **329** defining the channel B terminates before reaching the remaining portion of the end **329**. The depth of the channel B extends from the secondary panel **315** to the flange **335** of the second front portion **33** of the bottom panel **330**.

The splitter module housing **322** of the FDH **200** is positioned on the top panel **320** adjacent the first end **328**. The splitter module housing **322** serves to protect, organize, and secure the splitter modules **500** of the FDH **200**. The splitter module housing **322** can be constructed in various sizes to accommodate different numbers of splitter modules **500**. The splitter module housing **322** is generally rectangular and defines one or more locations within the open interior sized to accept one or more optical splitter modules **500**. To accommodate the splitter modules **500**, the module housing **322** includes structure for supporting/securing the splitter modules **500**. In example embodiments, the splitter modules **500** are designed to snap into the splitter module housing **322**. In one embodiment, the splitter modules **500** are loaded into the splitter module housing **322** from front to back (i.e., from the side facing end **329** to the side facing end **328**). The module housing **322** is further configured to enable the splitter modules **500** to receive an input fiber, such as fiber **702** of FIG. **3**, on one end of the splitter module **500** and to output multiple fibers, such as pigtails **704** of FIG. **3**, from the opposing end of the splitter **500**.

Referring now to FIGS. **8**A-**8**C, one type of splitter module **500** that can be mounted in the splitter module housing **322** is a splitter having an integral connector. FIG. **8**A is a left side view of such a splitter module **500**. The splitter module **500** includes a housing **505** having at least one protective boot **510** protruding frontwardly and at least one integral connector **520** protruding rearwardly. In the embodiment shown, two boots **510** protrude from the front and two integral connectors **520** protrude rearwardly from the splitter housing **505**. In one example embodiment (not shown), each splitter has four integral connectors **520**. In some embodiments, a handle **540** also protrudes from the front end of the splitter housing **505**. FIG. **8**B is an exploded view of the splitter module **500** of FIG. **8**A showing the internal components of the splitter module **500**.

FIG. **8**C shows a cross-section of the splitter module **500** of FIG. **7**A inserted in the splitter module housing **322**. An adapter assembly **530** is secured to the splitter module housing **322** using a fastener **536**. In one embodiment, adapter assemblies **530** are mounted at the backside of the splitter module housing **322**. The adapter assembly **530** is configured to receive the connectors **520** of the splitter module **500** when the splitter module **500** is inserted into the splitter module housing **322**. As shown, the adapter assembly **530** is further configured to receive an opposing connector associated with the feeder cable **700**. In some embodiments, the adapter assembly **530** receives a connector **703** terminating a splitter input fiber **702**. In other embodiments, the adapter assembly **530** receives a connector **701** terminating the feeder cable **700** itself. In this way, the feeder cable fibers **700** can be readily coupled to the splitter modules **500**.

Other embodiments of splitter modules **500** do not include integral connectors **520**. In such embodiments, adapter assemblies **530** are not mounted at the splitter module housing **322** and the feeder cables **700** cannot be plugged directly into the splitter modules **500**. Rather, input pigtails (not shown) pass through the splitter housing **505** and enter the splitter module **500**. The opposing ends of the input pigtails can be connectorized or unconnectorized. If the ends **701** terminate in connectors (not shown), then the input fibers **702** are interfaced with the feeder cable **700** using an adapter module **810** (see FIG. **18**). If the ends **701** are unconnectorized, then the input fibers **702** are spliced with the feeder cable **700** using a splice tray **808** (see FIG. **19**).

Typically, each splitter module **500** receives between one and four fibers and outputs between two and sixteen fibers **704** for every input fiber. In one example embodiment, four input fibers **702** enter a splitter module **500** and thirty-two pigtail fibers **704** exit the splitter module **500**. Further information regarding the splitter module **500** can be found in the U.S. application Ser. No. 11/354,297, entitled "Fiber Optic Splitter Module," that was filed on a date concurrent herewith, and which is hereby incorporated by reference. Additional information on other types of splitter modules can be found at U.S. application Ser. No. 10/980,978, filed Nov. 3, 2004, entitled "Fiber Optic Module And System Including Rear Connectors;" U.S. application Ser. No. 11/138,063, filed May 25, 2005, entitled "Fiber Optic Splitter Module;" U.S. application Ser. No. 11/215,837, filed Aug. 29, 2005, entitled "Fiber Optic Splitter Module With Connector Access;" and U.S. application Ser. No. 11/321,696, filed Dec. 28, 2005, entitled "Splitter Modules For Fiber Distribution Hubs," the disclosures of which are hereby incorporated by reference.

Referring now to FIGS. **9**-**10**, the splitter modules **500** and storage modules **600** can be incrementally added to the swing frame **300**. FIG. **9** illustrates a splitter module **500** having multiple connectorized pigtails **704** exiting from a protective boot **510** on the splitter module **500**. The connectorized pigtails **704** are typically stored in one or more storage modules **600** prior to installation on the swing frame **300**. In some embodiments, the connector **706** of each pigtail **704** is secured in a storage module **600** before the splitter module **500** leaves the factory. Typically, the connectorized pigtails **704** of each splitter module **500** are routed to four storage modules **600** each holding eight connectors.

The storage module **600** includes a body **610** having a front side **602** and a rear side **604**. The body **610** is configured to hold at least one fiber connector **706**. Typically, the body **610** is configured to hold about eight connectors **706**. In some embodiments, the body **610** is arranged to retain the fiber connectors **706** in a single row configuration. In other embodiments, the body **610** can be arranged to hold the connectors **706** in a square pattern or in any other desired configuration. More information regarding the storage modules **600** can be found in U.S. application Ser. No. 10/610,325, filed on Jun. 30, 2003, entitled "Fiber Optic Connector Holder and Method;" U.S. application Ser. No. 10/613,764, filed on Jul. 2, 2003, entitled "Telecommunications Connection Cabinet;" and U.S. application Ser. No. 10/871,555, filed on Jun. 18, 2004, entitled "Multi-position Fiber Optic Connector Holder and Method," the disclosures of which are hereby incorporated by reference.

In some embodiments, the body **610** is designed to snap into one of the openings **314** defined in the storage region **313** of the main panel **310**. The openings **314** can be arranged in any desired configuration within the storage region **313** of the main panel **310**. In the example shown in FIG. **10**, the storage region **313** of the main panel **310** defines nine openings **314** in a rectangular pattern. Each opening **314** is configured to receive a storage module body **610** arranged to retain eight fiber connectors **706** in a row.

As shown in FIG. **10**, when the splitter module **500** is loaded into the splitter module housing **322** during installation, the corresponding storage modules **600** are loaded onto the storage region **313** of the main panel **310**. For ease in viewing, only one splitter **500** having one pigtail **704** and one storage module **600** is illustrated. The pigtail **704** extending from the splitter module **500** to the storage module **600** is routed from the protective boot **510**, across the top panel **320**, down through the channel B on the front side of the secondary panel **315**, and across the bottom panel **330** of the swing frame **300**.

To accomplish this routing, the top panel **320** and secondary panel **315** include cable management arrangements. In some embodiments, the cable management arrangements on the top panel **320** include a first spool **952** positioned between the splitter housing **322** and the bend radius limiter **962** and a second spool **954** positioned between the bend limiter **940** and the front flange **342**. Pigtails **704** output from the splitter **500** are first wrapped around the first spool **952** and then around the second spool **954**.

A bend radius limiter **964** having tabs **965** and extending downward from the top panel **320** partially defines the channel B. From the second spool **954**, some of the pigtails **704** are routed over the bend limiter **964** and into the channel B. In some embodiments, a partial fiber spool **966** is mounted to extend from the protruding portion **325** of the secondary panel **315** and is also oriented to route fiber into the channel B. To avoid excessive weight or entanglement of the fibers **704**, some of the fibers **704** can be routed into channel B over the partial spool **966** instead of bend limiter **964**. Extra slack can also be taken up by routing the pigtails **704** over spool **966** instead of over bend limiter **964**. A bend limiter **968** can also be mounted on the protruding portion **325** of the secondary panel **315** and oriented to route fiber up to the partial spool **966**.

The front of the secondary panel **315** includes at least one row of partial spools **970** and at least one row of radius limiters **980**. In one example embodiment, the partial spools **970** are oriented to enable fiber routed down channel B to wrap at least partially around one of the spools **970**. The fiber can travel from the partial spools **970** either along the bottom panel **330** to the storage modules **600** or over the limiters **980** to the termination modules **400**. The limiters **980** are oriented to enable fiber routed from the partial spools **970** to travel to the termination modules **400** without excessive bending.

Referring now to FIG. **11**, when a pigtail **704** retained in a storage module **600** should be connected to a subscriber distribution line **708**, the corresponding connector **706** is

removed from the storage module **600** and transferred to the appropriate adapter **450** on a termination module **400**. During this transfer process, the fiber may need to be rewound around a different partial spool **970**, such as partial spool **972**, in order to reach the adapter **450**. From the partial spool **972**, the fiber can be routed around a suitable limiter **980** to avoid excessive bending before reaching the adapter **450**. In some embodiments, the fiber is also fed through support fingers **990** extending from the termination section **311** of the main panel **310** before plugging into the adapter **450**. When all of the fibers **704** originally secured in the storage module **600** have been routed to subscriber termination modules **400**, the empty storage modules **600** can be removed to make room for a new splitter module **500** and new storage modules **600**.

Referring now to FIGS. **12**A-**12**B, as time passes and the number of subscribers increases, a user can add termination modules **400** to the swing frame **300**. FIGS. **12**A and **12**B show one example of a termination module **400**. The termination module **400** includes a termination leg **410** and a management leg **420** arranged in a substantially L-shaped configuration. In some embodiments, a linking section **430** connects the termination leg **410** to the management leg **420**. In other embodiments, the linking section **430** is monolithically formed with either the termination leg **410** or the management leg **420**. In still other embodiments, the termination leg **410**, the management leg **420**, and the linking section **430** are monolithically formed (e.g., are constructed as a single piece of bent sheet metal).

In some embodiments, a front side of the termination leg **410** of the termination module **400** (shown in FIG. **12**B) mounts to the rear side of the main panel **310**. In one embodiment, the termination leg **410** mounts to the main panel **310** using screws **417**. In other embodiments, however, other fasteners such as bolts, rivets, nails, and other such devices can be used to connect the module **400** to the main panel **310**. In still other embodiments, the module **400** can be attached to the main panel **310** using adhesive.

Each termination module **400** includes at least one row of fiber optic adapters **450** for connecting the fibers of the main cable **700** to the fibers of the distribution cable **708**. Each adapter **450** has a front end **452** and a rear end **454**. The front end **452** of each adapter **450** is configured to retain a connector **714** of a fiber **712** interfaced with the main line **700**, or the connector **706** of a fiber **704** split from the main line **700**. The rear end **454** of each adapter **450** is configured to retain a connector **710** of a fiber of the distribution cable **708**. The adapters **450** protrude through the termination leg **410** so that the connectors **706** enter the front ends **452** of the adapters **450** from a front side of the main panel **310** and the connectors **710** of the distribution cable **708** enter the adapters **450** from a rear side of the main panel **310**.

In the depicted embodiment, each module **400** includes six horizontal rows of adapters **450** that cooperate to define two side-by-side banks of adapters. When the module **400** is mounted to the main panel **310**, the front side of the leg **410** abuts against the backside of the main panel **310**, and the rows of adapters **450** project forwardly through the corresponding horizontal slots **314** defined by the panel **310**.

The management leg **420** extends rearwardly from the termination leg **410**. Each management leg **420** includes an appropriate number of fanouts **424** to accommodate the number of adapters **450** on the module **400**. For example, in one embodiment, the termination leg **410** of a module **400** includes six rows of adapters **450**, each row having twelve adapters **450**, and the management leg **420** includes six 12:1 fanouts **424**. As the term is used herein, a 12:1 fanout is a fanout configured to receive twelve optical fibers and to output a single cable ribbon containing the twelve fibers. In another embodiment, nine 8:1 fanouts or three 24:1 fanouts could be provided instead of the 12:1 fanouts. In still other embodiments, fanouts can be used to upjacket the fiber.

In some embodiments, the termination module **400** is precabled at the factory to include a connectorized distribution fiber **708** coupled to each adapter **450**. Dust caps **453** are generally provided on the front ends **452** of the adapters **450** to protect the terminated distribution fibers **708** from dust, dirt, and other contaminants. The connector **710** of each distribution fiber **708** is mounted within the rear end **454** of an adapter **450** and the distribution fibers **708** are routed from the connector **710** to the fanouts **424** provided on the management leg **420** of the termination module **400**. In still other embodiments, the termination module **400** is not precabled and dust caps **455** are also provided on the rear ends **454** of the adapters **450** to protect the adapters **450**.

In some embodiments, the management leg **420** of the termination module **400** also includes at least one cable management device **425** for managing excess fiber length of the distribution fibers **708**. Generally, in such systems, the fibers **708** are routed first to the cable management device **425** and then to the fanouts **424**. Examples of cable management devices **425** include a fiber spool, one or more radius bend limiters, one or more fiber clips, and other such devices. In the example shown, the management leg **420** includes a fiber spool **426** formed from two radius bend limiters. Each radius bend limiter includes a flange **427** for retaining the fiber on the spool **426**. In some embodiments, one or more fiber cable clips **428** for retaining fiber cables can be spaced between the radius bend limiters of the spool **426**.

Referring now to FIG. **13**, the management leg **420** of the termination module **400** includes an opening **422** through which the fibers are routed from the cable management devices **425** to the fanouts **424**. Upon exiting the fanouts **424**, the ribbon fibers are routed to a cabinet fanout (not shown) or other cable interface device. In other embodiments, the fanouts **424** are provided on the same side of the management leg **420** as the cable management device **425**. In such embodiments, the ribbon fibers are routed from the fanouts **424** through the openings **422** and to the cabinet fanout. The cabinet fanout is mounted to the interior of the cabinet **201** and is not attached to the swing frame **300**. The cabinet fanout can be used to reduce the ribbon fibers into a single jacketed stub cable that exits the FDH **200**. The stub cable is spliced to a subscriber distribution cable outside of the FDH **200**. In various embodiments, the stub cable ranges in length from about 25 feet to about 300 feet. In other embodiments, the distribution cable **708** can be routed into the cabinet **201** and spliced or otherwise connected to the fiber **708**.

Referring now to FIG. **14**, the rear side **304** of the swing frame **300** forms an open chamber adapted to house at least one termination module **400**. The open chamber is defined by the bulkhead **301**, the top panel **320**, the bottom panel **330**, and the side panel **340**. FIG. **14** is a rear perspective view of four termination modules **400** mounted in the open chamber. The adapters **450** have been removed for ease in viewing. In other embodiments, any desired number of termination modules **400** can be mounted on the swing frame **300**. The termination modules **400** are configured to mount to the rear side of the termination region **311** of the main panel **310**.

FIG. **15** shows a left side view of a swing frame **300** having four termination modules **400** mounted therein. When multiple termination modules **400** are mounted to the rear side of the main panel **310**, the management legs **420** of the termination modules **400** form a partial side panel opposing the side panel **340**. In some embodiments, the management legs

420 of the modules 400 are secured to one another or to the swing frame 300. In other embodiments, shown in FIG. 15, the modules 400 are secured to the swing frame 300 only at the termination leg 410 and the management legs 420 are free floating.

Referring now to FIGS. 16-19, the swing frame 300 can be configured with different interface devices 800 (see FIG. 3) and cable management devices to create multiple fiber pathways between the incoming feeder cable 700 and the distribution lines 708. The interface devices 800 and management devices used in a particular configuration will depend on whether it is desirable to split the feeder cable 700 and what type of splitter module 500 is utilized.

In some embodiments, the feeder cable 700 connects to one or more splitter input fibers 702. In one such embodiment, a first end 701 of a splitter input fiber 702 is connectorized. In another such embodiment, the first end 701 is unconnectorized. The opposite end 703 of the input fiber 702 can either interface with an integral connector 520 on the splitter module 500, such as when using the splitter module depicted in FIGS. 8A-8C, or can penetrate the splitter housing 505. In other embodiments, however, the feeder cable 700 has connectors configured to interface with integral connectors 520 of the splitter module 500.

FIG. 16 is a rear view of the swing frame 300 adapted to interface a connectorized feeder cable 700 with a splitter module 500. To accomplish this interface, the cable management devices are arranged according to a configuration C1. In configuration C1, a cable storage spool 922 and one or more partial storage spools 924 are mounted to the side panel 340 of the swing frame 300. A fanout device 926 is mounted adjacent the spools 922, 924. A radius limiter 936 is mounted from the secondary panel near the corner formed by the top panel 320 and side panel 340. Support fingers 932 projecting downward from the top panel 320 form a path A along which fibers can be routed from one end 329 of the top panel 320 to the other end 328. In some embodiments, the support fingers 932 include a multi-pronged clip 934 having at least two fingers 932, each finger 932 extending in a different direction. In one example embodiment, the multi-pronged clip 934 includes four fingers 932 positioned orthogonally relative to one another. Any excess fiber length can be taken up by winding the pigtails 702 around the multi-pronged clip 934. A limiter 940 having tabs 945 extends from the top panel.

To connect the feeder cable 700 to the splitter 500, the cable 700 is first routed around spools 922, 924 and then to the fanout device 926. The fanout device 926 separates the fibers of the feeder cable 700 into individual input fibers. Any excess length of the individual fibers of the feeder cable 700 can be stored by wrapping the fibers around the spools 922, 924. The fibers of the feeder cable 700 are next routed around the limiter 936 and along the path A using the support fingers 932 projecting downward from the top panel 320. The feeder cable 700 is next curved around the limiter 940 extending from the top panel 320 and plugged directly into at least one of the adapter assemblies 530 secured to the splitter module housing 322. The fibers of the feeder cable 700 can be protected while being routed within the swing frame 300 by loose buffer tubes.

FIG. 17 is a rear perspective view of the swing frame 300 adapted to interface a connectorized feeder cable 700 to a splitter module 500. The cable management devices are arranged according to a variation of configuration C1. The storage spools 922, 924 and fanout device 926 are mounted to the rear side of the secondary panel 315 rather than the side panel 340. In other embodiments (not shown), the storage spools 922, 924 and fanout device 926 could be mounted to the bottom panel 330. Regardless of the location of the spools 922, 924 and fanout device 926, the feeder cable 700 is still routed from the fanout device 926 to the bend limiter 936, along path A, over the bend limiter 940 and to the adapter assembly 530 mounted on the splitter module housing 322.

Referring now to FIGS. 18-19, the feeder cable 700 can be interfaced with splitter inputs 702 using at least one interface device 800 rather than connecting directly to the splitter 500. FIG. 18 is a rear perspective view of the swing frame 300 configured to interface a connectorized feeder cable 700 with a splitter module 500 through intermediate splitter input fibers 702. Each splitter input fibers 702 has a first connectorized end 703 that plugs into one of the adapter assemblies 530 opposite the integral connectors 520 of the splitters 500. In other embodiments not using a splitter having an integral connector, however, the splitter input 702 is a pigtail that penetrates the splitter housing 505 rather than plugging into an adapter assembly 530. Each splitter input fibers 702 also has a second connectorized end 701 that interfaces with a connectorized end of a fiber of the feeder cable 700.

Such input pigtails 702 are routed from the adapter assembly 530 over the bend radius limiter 940 and underneath the top panel 320 as shown in FIG. 16. In particular, the input pigtails 702 are routed along the path A towards the side panel 340 using the support fingers 932 and then around the radius bend limiter 936. The ends 701 of the input pigtails are then connected to the feeder cable 700 using a first adapter module 820. In some embodiments, the first adapter module is mounted to the secondary panel 315 adjacent the bottom panel 330. In other embodiments, however, the first adapter module 820 can be secured to the bottom panel 330 or the side panel 340. The first adapter module 820 includes multiple adapters 825 arranged in one or more rows. In some embodiments, each row includes about six adapters 825. Additional information regarding the adapter module 820 can be found in U.S. application Ser. No. 11/095,033, filed Mar. 31, 2005, and entitled "Adapter Block Including Connector Storage;" and U.S. Pat. Nos. 5,497,444; 5,717,810; 5,758,003; and 6,591,051, the disclosures of which are hereby incorporated by reference.

In order to connect the feeder cable 700 to the first adapter module 820, additional cable management devices are provided according to a second configuration C2. The second configuration C2 includes a fanout device 901 and one or more full or partial slack storage fiber spools 902, 904, respectively. In the example shown, the fanout device 901 and storage spools 902, 904 are mounted to the bottom panel 330.

The feeder cable 700 is first routed to the fanout device 901, which separates the fibers of the ribbon cable 700 into individual fibers. Any excess length of the individual fibers of the feeder cable 700 can be stored in the slack storage spool 902 and partial slack storage spools 904. The fibers of the feeder cable 700 are next routed to the first adapter module 820. The connectorized ends of the feeder cable 700 are mounted into one end of the adapters 825 of the first adapter module 820. The connectorized ends 701 of the input fibers 702 are routed from the radius limiter 936 to the opposite end of the adapters 825 of the first adapter module 820. The adapters 825 provide an interface between the connectors of the feeder cable fibers 700 and the connectors 701 of the input fibers 702.

FIG. 19 is a rear perspective view of the swing frame 300 configured for use with a splitter module and a feeder cable 700 having unconnectorized ends. The feeder cable 700 is spliced to splitter input fibers 702 having unconnectorized second ends 701. In order to connect the feeder cable 700 to the unconnectorized fiber inputs 702, a splice tray 830 is provided at the rear side 304 of the swing frame 300.

In order to connect the feeder cable **700** to the splice tray **830**, additional cable management devices are provided according to a third configuration C**3**. The third configuration C**3** includes a fanout device **907** and one or more radius bend limiters **906** mounted around the splice tray **830**. Additionally, at least one radius bend limiter **908** is positioned adjacent the splice tray **830**. Each limiter **906** includes a tab **907** to maintain the fibers in a loop around the limiters **906**. The limiters **906** are oriented to prevent fiber from catching on the corners of the splice tray **830**. In some embodiments, the splice tray **830** and limiters **906** are positioned on the back of the secondary panel **315**. In other embodiments, however, the splice tray **830** and limiters **906** can be positioned in any desired location at the rear side **304** of the swing frame **300**.

The unconnectorized ends of the feeder cable **700** are routed around the limiters **906** and to the splice tray **808**. Any excess length of the individual fibers of the feeder cable **700** can be stored by wrapping the fibers around the splice tray **830**. The input fibers **702** from the splitter module **500** are routed from the radius limiter **936** around the limiter **908** and into the splice tray **830**. The unconnectorized ends of the feeder cable **700** are then spliced with the unconnectorized ends **701** of the input fibers **702**.

Still referring to FIGS. **16-19**, in some embodiments, it may be desirable not to split one or more of the feeder cables **700** to enable transmission of a stronger or more reliable signal to a subscriber. In some embodiments, therefore, the swing frame **300** is further configured to enable at least one fiber (referred to as a pass-through fiber) **712** to interface with a fiber from the feeder cable **700**. The pass-through fiber **712** bypasses the splitter modules **500** and proceeds to the front of the swing frame **300** to interface with a distribution line **708**.

To accomplish such a routing, the swing frame **300** includes an opening **910** in the rear flange **344** of the side panel **340**. In some embodiments, the opening **910** includes a radius limiter **912** (best seen in FIG. **13**) extending outward from the outside surface of flange **344** to prevent excessive bending of a fiber routed through the opening **910**. A tab **915** can also be pressed outward in rear flange **344** to define a channel up the outer side of the rear flange **344**. A radius bend limiter **962** links the rear flange **344** of the side panel **340** to the top panel **320**. Additional cable management devices are provided based on the configuration C**1**, C**2**, C**3** with which the swing frame **300** is set up.

Referring to FIG. **17**, if the swing frame **300** is arranged according to configuration C**1**, then the connectorized fibers of the feeder cable **700** are connected to the input fibers **702** using a second adapter module **810**. The adapter module **810** includes multiple fiber optic adapters **815** configured to accept connectorized fibers from either end. The swing frame **300** also includes additional cable management in the form of a bend radius limiter **906** and slack storage spools **902**, **904**.

To bypassing the splitter modules **500**, the feeder cable **700** is still routed around spools **922**, **924** to the fanout device **926**. From the fanout device **926**, however, the feeder cable fibers **700** are routed back around spools **922**, **924**, around bend limiter **926** and then around spools **902**, **904**. From the spools **902**, **904**, the connectorized ends of the fibers **700** are secured to the adapter module **810**. The adapter module **810** connects the fibers **700** with connectorized ends of pass-through fibers **712** that are routed out the opening **910**, up the side panel **340**, over the limiter **962**, and onto the top panel **320**. From the top panel **320**, the pass-through fibers **712** are routed towards the termination modules **400** as described above with reference to FIGS. **10** and **11**.

Referring to FIG. **18**, pass-through fibers **712** can also be used with the second configuration C**2**. The feeder cable **700** is still routed first to the fanout device **901** and then to one end of the adapter module **820** with any slack being stored in spools **902**, **904**. However, instead of splitter pigtails **702** connecting to the other end of the adapter module **820**, the pass-through pigtails **712** are plugged into the adapter module **820**. The pass-through pigtails **712** then follow the same routing pattern as discussed in the previous paragraph.

Referring to FIG. **19**, the pass-through pigtails **712** can also be spliced to unconnectorized ends of the feeder cable **700**. If such a configuration is desired, then the swing frame **300** is provided with the second adapter module **810** discussed above with reference to FIG. **17**. The feeder cable **700** is still routed around limiters **906** and up to the splice tray **830** according to the configuration C**3**. Any excess length of the individual fibers of the feeder cable **700** can be stored by wrapping the fibers around the limiters **906**. However, the fibers of the feeder cable **700** are spliced to connectorized pigtails **711** rather than to the splitter inputs **702**. From the splice tray **830**, the connectorized pigtails **711** are routed around the storage spools **902**, **904** and then plugged into the second adapter module **810**. The second adapter module **810** connects the pigtails **711** with the pass-through connectorized fibers **712** that are routed out of the opening **910**, up the side panel **340** to the limiter **962**, and onto the top panel **320**.

The pass-through fibers **712** bypass the splitter module **500** and are routed around the second fiber spool **954** of the top panel **320** and into the channel B via either the limiter **964** or the partial spool **966**. The routing of the pass-through fiber **712** along the front side **302** of the swing frame is substantially the same as the routing of the splitter pigtails **704** discussed above with reference to FIGS. **10** and **11**. Typically, a pass-through fiber **712** is immediately connected to a subscriber line **708** via an adapter **450** on a termination module **400**. In some embodiments, however, the pass-through fibers **712** can be stored in empty locations on the storage modules **600**.

The above specification, examples and data provide a complete description of the manufacture and use of the composition of the invention. Since many embodiments of the invention can be made without departing from the spirit and scope of the invention, the invention resides in the claims hereinafter appended.

We claim:

1. A fiber distribution hub adapted to provide an interface between an incoming fiber and a plurality of outgoing fibers, the fiber distribution hub comprising:

a cabinet having a front and a rear, the cabinet including a front door for accessing an interior of the cabinet from the front of the cabinet;

a termination panel positioned within the interior of the cabinet, the termination panel including a front side that faces toward the front of the cabinet and a rear side that faces toward the rear of the cabinet, the termination panel defining at least one opening extending through the termination panel from the front side to the rear side, wherein the termination panel is part of a swing frame that is pivotally mounted within the cabinet, wherein the swing frame is movable between a first position where the rear side of the termination panel faces toward the rear of the cabinet, and a second position where the rear side of the termination panel can be accessed from the front of the cabinet;

an adapter module including an adapter mounting panel and a plurality of termination adapters mounted to the adapter module, the termination adapters including front ends and rear ends, the adapter mounting panel being secured to the rear side of the termination panel with the

front ends of the termination adapters extending forwardly through the at least one opening of the termination panel, the adapter mounting panel defining a profile that is larger than a profile of the opening defined in the termination panel so that the adapter mounting panel is removable only from the rear side of the termination panel, the adapter module also including rear fiber optic connectors mounted within the rear ends of the termination adapters, the rear fiber optic connectors being connected to the outgoing fibers;

a splitter mounted within the cabinet for splitting signals of the incoming fiber to a plurality of splitter fibers having ends; and

front fiber optic connectors positioned at the ends of the splitter fibers, the front fiber optic connectors being inserted within the front ends of the termination adapters to provide connections with the rear fiber optic connectors.

2. The fiber distribution hub of claim **1**, wherein the at least one opening of the termination panel includes a plurality of elongated slots separated by strips, and wherein the termination adapters of the adapter module are arranged in rows that fit within the elongated slots.

3. The fiber distribution hub of claim **2**, wherein labeling including connector identifying information is provided on the strips.

4. The fiber distribution hub of claim **1**, wherein the termination panel is part of a bulkhead that divides the swing frame into front and rear portions.

5. The fiber distribution hub of claim **4**, wherein the bulkhead also includes an intermediate panel positioned laterally adjacent to the termination panel, wherein a cable management arrangement for storing excess fiber is located at the intermediate panel, wherein the swing frame also includes a top panel, wherein the splitter is mounted on the top panel, and wherein the splitter fibers are routed from the splitter to the termination adapters by extending down the intermediate panel, around the cable management arrangement and then up to the termination adapters.

6. The fiber distribution hub of claim **5**, wherein the termination panel is angled relative to the intermediate panel.

7. The fiber distribution hub of claim **6**, wherein the swing frame includes a bottom trough located at the front portion of the swing frame, the trough being angled to match the angle between the termination panel and the intermediate panel.

8. The fiber distribution hub of claim **6**, wherein the swing frame is attached to the cabinet by a hinge, and wherein an end of the trough located adjacent the hinge is mitered to prevent the trough from interfering with moving the swing frame from the first position to the second position.

9. The fiber distribution hub of claim **4**, further comprising a splice tray and incoming fiber termination adapters mounted at the rear portion of the swing frame.

10. The fiber distribution hub of claim **1**, wherein the adapter module includes a cable management panel that projects rearwardly relative to the adapter mounting panel, the cable management panel defining a side opening for allowing the outgoing fibers to pass laterally through the cable management panel, the adapter module further including a cable management spool and a fan-out device mounted to the cable management panel.

11. The fiber distribution hub of claim **10**, wherein a plurality of the adapter modules are mounted to the back side of the termination panel, and wherein the cable management panels cooperate to define a side wall of the swing frame.

12. The fiber distribution hub of claim **1**, wherein the adapter module includes at least one row of 12 termination adapters.

13. The fiber distribution hub of claim **1**, wherein the adapter module includes 36 termination adapters.

14. The fiber distribution hub of claim **1**, wherein the adapter module includes 72 termination adapters.

15. A fiber distribution hub adapted to provide an interface between an incoming fiber and a plurality of outgoing fibers, the fiber distribution hub comprising:

a cabinet having a front and a rear, the cabinet including a front door for accessing an interior of the cabinet from the front of the cabinet;

a swing frame pivotally mounted to the cabinet by a hinge, the swing frame including a bulkhead that divides the swing frame into front and rear sections, the swing frame being movable between a first position where the swing frame is inside the cabinet and a second position where the swing frame extends at least partially outside the cabinet, the bulkhead including a termination region at which termination adapters are mounted, the termination adapters including front ends and rear ends, the swing frame also including a top panel and a bottom panel, the top panel having a top side and a bottom side, the bottom panel having a top side and a bottom side, and the bulkhead vertically extending between the top panel and the bottom panel;

an adapter module including an adapter mounting panel, wherein the termination adapters are mounted to the adapter mounting panel, the adapter mounting panel being secured to a rear side of the bulkhead with the front ends of the termination adapters extending forwardly through at least one opening defined in the bulkhead, the adapter mounting panel defining a profile that is larger than a profile of the at least one opening defined in the bulkhead so that the adapter mounting panel is removable only from the rear side of the bulkhead;

rear connectors inserted within rear ends of the termination adapters, the outgoing fibers being connected to the rear connectors;

a splitter mounted at the top side of the top panel of the swing frame, the splitter including a plurality of splitter fibers having ends terminated at front connectors, the splitter configured to split signals of the incoming fiber to the plurality of splitter fibers, the front connectors being inserted within the front ends of the termination adapters to interconnect the front and rear connectors; and

an incoming fiber routing path located at the rear section of the swing frame, the incoming fiber routing path extending laterally along the top side of the bottom panel of the swing frame in a direction away from the hinge, up the swing frame to the bottom side of the top panel of the swing frame, laterally along the bottom side of the top panel in a direction toward the hinge, and upwardly around a radius limiter to the splitter mounted at the top side of the top panel.

16. A fiber distribution hub adapted to provide an interface between incoming fibers and outgoing fibers, the fiber distribution hub comprising:

a cabinet having a front and a rear, the cabinet including a front door for accessing an interior of the cabinet from the front of the cabinet;

a termination region located at a termination panel disposed within the interior of the cabinet, the termination region including a plurality of termination adapters;

an adapter module including an adapter mounting panel, wherein the termination adapters are mounted to the adapter mounting panel, the adapter mounting panel being secured to a rear side of the termination panel with the front ends of the termination adapters extending forwardly through at least one opening defined in the termination panel, the adapter mounting panel defining a profile that is larger than a profile of the at least one opening defined in the termination panel so that the adapter mounting panel is removable only from the rear side of the termination panel;

the outgoing fibers being connected to rear connectors inserted within rear ends of the termination adapters;

a splitter module located at a splitter mounting location within the cabinet, the splitter module being configured to split signals from a first incoming fiber to a plurality of splitter fibers having ends at which front connectors are terminated, the front connectors being inserted within front ends of the termination adapters to interconnect the incoming fiber with the outgoing fibers, each of the splitter fibers carrying a signal having a first signal strength; and

a splitter bypass interface location at which a second incoming fiber is connected to a pass-through pigtail, which is routed to one of the termination adapters, whereby the pass-through pigtail bypasses the splitter, the pass-through pigtail carrying a signal having a second signal strength that is stronger than the first signal strength.

17. The fiber distribution hub of claim **16**, further comprising a swing frame pivotally mounted to the cabinet by a hinge, the swing frame including a bulkhead that divides the swing frame into front and rear sections, the swing frame being movable between a first position where the swing frame is inside the cabinet and a second position where the swing frame extends at least partially outside the cabinet, the bulkhead including the termination panel.

18. The fiber distribution hub of claim **17**, wherein the swing frame includes a top panel and a bottom panel, wherein the swing frame also includes a side panel positioned opposite from the hinge, and wherein the second incoming fiber defines a routing path that extends across the rear section of the swing frame along a top side of the bottom panel in a direction away from the hinge, through an opening in the side panel, up an exterior side of the side panel to a top side of the top panel, and then forwardly across the top side of the top panel to reach the front region of the swing frame.

19. The fiber distribution hub of claim **16**, further comprising a storage module located at a storage region within the cabinet, the storage module being configured to receive the first ends of the splitter fibers temporarily until the splitter fibers are required for service.

20. The fiber distribution hub of claim **16**, wherein the splitter bypass interface location is spaced from the splitter mounting location.

* * * * *