followed during later moves, adds and changes. Doors to patch panels should be marked as to usage and include warnings regarding authorized entry.

Cleaning Up The Job Site
After terminating or splicing cables, the installer should carefully clean up the job site and leave it at least as clean as they found it, preferably cleaner. All scraps, especially fiber scraps which should be sealed in disposable containers, must be removed from the site.

Saving Excess Components
Any excess components should be saved for future use, especially restoration. Connectors and cables can be stored along with cable plant documentation so any restoration in the future will have compatible components for use in splicing or terminating cables.

Testing the Installed Fiber Optic Cable Plant

During the design phase, each cable run should have a loss budget calculated based on the component specifications. After installation, it is necessary to test each fiber in all fiber optic cables for verification of proper installation by comparing measured loss to the calculated loss from the loss budget.

Typically, the installer will perform the following tests:
Continuity testing to determine that the fiber routing and/or polarization is correct and documentation is proper.
End-to-end insertion loss using an OLTS power meter and source. Test multimode cables using TIA/EIA 526-14 Method B, and singlemode cables using TIA/EIA 526-7 unless connector-test equipment compatibility requires another reference method. Total loss should be less than the calculated maximum loss for the cable based on loss budget calculations using appropriate standards or customer specifications. If testing shows variances from expected losses, troubleshoot the problems and correct them.
Optional OTDR testing may be used to verify cable installation and splice performance. However, OTDR testing shall not be used to determine cable loss. Use of an OTDR in premises applications may be inappropriate if cables are short. An experienced OTDR technician should determine the appropriateness of the usage.
If the design documentation does not include cable plant length, and this is not recorded during installation, read the length from the distance markings on the cable jackets or test the length of the fiber using the length feature available on an OTDR or some OLTSs.

Continuity Testing
Perform continuity testing of optical fibers using a visual fiber tracer, visual fault locator, or OLTS power meter and source. Trace the fiber from end to end through any interconnections to ensure that the path is properly installed, and that polarization and routing are correct and documented.

Insertion Loss
Insertion loss refers to the optical loss of the installed fibers when measured with a test source and power meter (OLTS). Test multimode cables using TIA/EIA 526-14, preferably Method B (but always document the method used), and singlemode cables using TIA/EIA 526-7 (single mode).
Test multimode fiber at 850 and 1300 nm, and singlemode fiber at 1310 and 1550 nm, unless otherwise required by other standards or customer requirements.
Test reference test cables before testing to verify quality and clean them often.
Cabling intended for use with high speed systems using laser sources may be tested with appropriate laser sources to ensure that tests verify performance with that type
of source.

OTDR Testing
The optical time domain reflectometer (OTDR) uses optical radar-like techniques to create a picture of a fiber in an installed fiber optic cable. The picture, called a signature or trace, contains data on the length of the fiber, loss in fiber segments, connectors, splices and loss caused by stress during installation. OTDRs are used to verify the quality of the installation or for troubleshooting. However, OTDR testing alone shall not be used to determine cable loss. OTDR testing should only performed by trained personnel, using certified equipment designed for the purpose. The technicians performing the tests should be trained not only in operation of the OTDR equipment, but also in the setup of OTDR test parameters and the interpretation of OTDR traces. OTDRs have limited distance resolution and may show confusing artifacts when testing short cables typical of premises applications. If OTDR testing of premises cables is desired, experienced personnel should evaluate the appropriateness of the tests.

More on testing.

Administration, Management, and Documentation

Documentation of the fiber optic cable plant is an integral part of the design, installation and maintenance process for the fiber optic network. Documenting the installation properly will facilitate installation, allow better planning for upgrading, simplify testing and future moves, adds and changes.
Unless the user specifies otherwise, documentation of the fiber optic cable plant should follow ANSI/TIA/EIA-606, Administration Standard for the Telecommunications Infrastructure of Commercial Buildings.
Fiber optic cables, especially those used for backbone cables, may contain many fibers that connect a number of different links going to several different locations with interconnections at patch panels or splice closures. The fiber optic cable plant should be documented as to the exact path that every fiber in each cable follows, including intermediate connections and every connector type. Documentation should also include insertion loss data and optional OTDR traces.

Read more on installation.

Test Your Comprehension

References

The FOA Reference Guide to Outside Plant Fiber Optics

The FOA Online Reference Guide to Fiber Optics

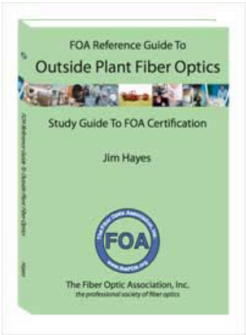

You can buy the printed version of the The FOA Reference Guide to Outside Plant Fiber Optics from the FOA eStore or Amazon.

Table of Contents: The FOA Reference Guide To Fiber Optics

(C)2010, The Fiber Optic Association, Inc.

EXHIBIT B

https://web.archive.org/web/20091104072416/http://www.thefoa.org:80/tech/guides/INSTL.pdf

The Fiber Optic Association, Inc.

1119 S. Mission Road #355, Fallbrook, CA 92028
1-760-451-3655 Fax 1-781-207-2421
Email: info@thefoa.org http://www.TheFOA.org

FOA Technical Bulletin –2008C

Guide To Fiber Optic Installation

Contents

		Page
Part 1	Introduction	1
Part 2	Planning for the install	3
Part 3	Installation Requirements / General Guidelines	5
Part 4	Fiber Optic Components: Cables	7
Part 5	Installing Fiber Optic Cable	11
Part 6	Fiber Optic Splicing and Termination Hardware	14
Part 7	Testing the Installed Fiber Optic Cable Plant	18
Part 8	Administration, Management, and Documentation	20
Part 9	References:	20

Part 1: Introduction

This FOA Technical Bulletin describes recommended procedures for installing and testing cabling networks that use fiber optic cables and related components to carry signals for communications, security, control and similar purposes. It defines a procedures that should provide a high level of quality for fiber optic cable installations. This document covers fiber optic cabling installed indoors (premises installations) with the addition of outside plant (OSP) applications involved in campus installations where the fiber optic cabling extends between buildings.

Reference Documents

There are other FOA Technical Bulletins that should be used as references for the design and planning of the network. These documents can be downloaded from the FOA Tech Topics website.

Guide To Fiber Optic Network Design, Tech Bulletin 2008B: What is fiber optic network design? This document covers the entire process from understanding fiber networks, choosing components, planning the network route and the installation process. It is an overview of the entire process. This document complements it in terms of addressing the details of the installation process.

User's Guide To Fiber Optics, Tech Bulletin 2006C: This Tech Bulletin answers many questions often asked by users of fiber optic networks and provides gideelines for their implementation. Should you use fiber optics for your communications system? What are its advantages and disadvantages? Is it hard to design and install fiber optic networks? Do they require maintenance?

Guide To Fiber Optic Network Restoration, Tech Bulletin 2008A. *What problems can be anticipated in planning fiber optic networks? How does the* user determine the cause of the problem? How is the best and fastest way to restore communications?

Guide To Testing And Troubleshooting Fiber Optic Installation, Tech Bulletin 2006B. This is intended as an overview and installation checklist for all managers, engineers and installers on the overall process of testing and troubleshooting a fiber optic communications system.

Part 2: Planning for the install

Final planning for the installation is a critical phase of any project as it involves coordinating activites of many people and companies. The best way to keep everything straight is probably to develop a checklist based on the design path:

Pre-install checklist:

a) Main point of contact/project manager chosen
b) Link communications requirements set
c) Equipment requirements set and vendors chosen
d) Link route chosen, permits obtained
e) Cable plant components and vendors chosen
f) Coordination with facilities and electrical personnel complete
g) Documentation ready for installation, preliminary restoration plans ready
h) Test plan complete
i) Schedule and start date set for installation, all parties notified
j) Components ordered and delivery date set, plans made for receiving materials (time, place,) arrange security if left outside or on construction site
k) Contractor/installer chosen and start date set
l) Link route tour with contractor(s)
m) Construction plans reviewed with contractor(s)
n) Components chosen reviewed with contractor(s)
o) Schedule reviewed with contractor(s)
p) Safety rules reviewed with contractor(s)
q) Excess materials being kept for restoration reviewed with contractor(s)
r) Test plan reviewed with contractor(s)

Before starting the install:

a) All permits available for inspection
b) Sites prepared, power available
c) All components on site, inspected, security arranged if necessary
d) Contractor available
e) Relevant personnel notified
f) Safety rules posted on the job site(s) and reviewed with all supervisors and installation personnel

During The Installation:

a) Inspect workmanship
b) Daily review of process, progress, test data
c) Immediate notification and solution of problems, shortages, etc.

After completion of cable plant installation:

a) Inspect workmanship
b) Review test data on cable plant
c) Set up and test communications system
d) Update and complete documentation
e) Update and complete restoration plan
f) Store restoration plan, documentation, components, etc.

Part 3: Installation Requirements / General Guidelines

Receiving Fiber Optic Cabling and Equipment on Site

a) Fiber Optic equipment and components are subject to damage by improper handling and must be handled accordingly.

b) When initially received on the job site all fiber optic components should be carefully inspected for damage and tested for continuity or loss if damage is suspected.

c) Ensure that all components and parts have been shipped~~,~~ received, match quantities ordered (e.g. fiber optic cable contains the number and type of fiber ordered and is the length ordered), and that any discrepancies or damaged goods are noted, the supplier notified and replaced as required.

d) All equipment and cabling shall be stored in a clean and dry location, protected from harsh environments and extremes of cold and heat.

Handling Fiber Optic Cables

a) Handle reels of fiber optic cable with care. All reels, regardless of size or length, must have both ends of the cable available for the testing. A fiber tracer or visual fault locator and bare fiber adapters can be used for continuity testing.

b) Move small, lightweight spools of fiber optic cable by hand. Move larger reels with appropriate lifting equipment or using two or more installers skilled in the moving operation.

c) Lifting equipment shall only must reels with a matched set of slings or chokers, attached to an appropriately sized piece of pipe inserted into the hole in the center of the reel. Slings and chokers shall never be attached around the spooled area of the reel. The cable reels shall be moved carefully to avoid damage to the cable.

Support Structures

a) Install support structures for fiber optic cable installations before the installation of the fiber optic cable itself. These structures should follow the guidelines of TIA/EIA 569-A and NECA/BICSI 568-2001.

b) Allow for future growth in the quantity and size of cables when determining the size of the pathway bend radius requirements.

c) Do not install a fiber optic cable in a conduit or duct that already contains cabling, regardless of the cable type. Existing or new empty ductwork can be modified to accept several different installations by the placement of innerduct within it.

Removal of Abandoned Cables

Unless directed by the owner or other agency that unused cables are reserved for future use, remove abandoned optical fiber cable (cable that is not terminated at

equipment other than a connector and not identified for future use with a tag) as required by the National Electrical Code.

Fire Stopping

a) All telecommunications firestopping shall comply with applicable codes and standards, including TIA/EIA 569-A-Annex A and NECA/BICSI 568-2001.

b) All penetrations shall be protected by approved firestops. Fire stopping compounds and devices shall be used whenever a fire separation has been breached by an installation.

c) In most geographical locals the breaching of a fire separation will require physical monitoring until it has been repaired.

d) Check with the “Authority Having Jurisdiction” for specific requirements on the project before commencing work.

Grounding and Bonding

a) Ground systems shall be designed as specified by the NEC and other applicable codes and standards (ANSI/TIA/EIA 607-A, NECA-BICSI-568-2001).

b) Although most fiber optic cables are not conductive, any metallic hardware used in fiber optic cabling systems (such as wall-mounted termination boxes, racks, and patch panels) must be grounded.

c) Conductive cables require proper grounding and bonding for applicable conductors.

Part 4: Fiber Optic Components

Cables

Cable Types

Fiber optic cables are available in many types, for different applications. Premises cables are usually tight buffer designs that include jackets rated for flammability. OSP cables are generally loose tube designs with water blocking and may also have an armored jacket.

Some cables are usable for either OSP or premises applications. These include dry-water blocked tight buffered cables that can be used for short outdoor runs and double jacketed OSP cables that have a removable outside jacket and an inner jacket that is rated a flame retardant.

Fiber Optic Cables by Fiber Types

Fiber optic cables may contain multimode fibers, singlemode fibers or a combination of the two, in which case it is referred to as a “hybrid” cable. The type of cable shall be positively identified and , if hybrid, the type of each fiber, since multimode and singlemode fiber are terminated in different manners. See the section on termination below.

Fiber Optic Cables by Construction Type

a) Tight Buffered Cables

Tight buffered fiber optic cable contains fiber with a soft 900-micron diameter coating that protects the fiber and is color-coded for identification.

Simplex, Zip Cord: Tight buffered fibers are cabled with strength members (usually aramid fibers) in simplex or zip cord cables for use as patch cords.

Distribution: Multiple tight buffered fibers may be cabled with aramid fiber strength members and a central stiffener in a cable type called a distribution cable, often used for premises backbones, horizontal runs or general building cabling.

Breakout: Several simplex cables can be bundled in a single cable called a breakout cable.

Simplex, zipcord and breakout cables may be directly terminated for connection to a patch panel or network equipment as the cable provides adequate protection for the fibers.

Fibers in distribution cables are terminated directly, but the lack of protection for the individual fibers requires they be placed inside patch panels or wall-mounted boxes.

b) Loose Tube Cable

Loose tube (also called loose buffer) fiber optic cable consists of one or more protective tubes, each containing one or more fibers with only 250-micron primary coating over the fiber or ribbons typically containing 12 fibers per ribbon. Loose-tube cable is primarily used for outside plant installations where low attenuation and high cable pulling strength are required.

Many fibers can be incorporated into the same tube, providing a small-size, high-fiber density construction. The tubes are usually filled with a gel, which prevents water from entering the cable, although dry water-blocking compounds are becoming more common. The fibers in loose tube cables are protected from the outside environment and can be installed with higher pulling tensions than tight-buffered cables.

Fiber in loose tube cables may be spliced directly and placed in appropriate protective enclosures. Fibers in loose tube cables which have only the 250 micron primary coating should be sleeved with a break out kit for protection before termination and placed in patch panels or wall-mounted boxes for protection.

Flammability - Cable Ratings and Markings

All premises cables shall be listed and have flammability ratings per NEC 770.50. Cables without markings should never be installed inside buildings, as they do not comply with the National Electrical Code. Optical cable markings are as follows:

OFN	optical fiber nonconductive
OFC	optical fiber conductive
OFNG or OFCG	general purpose
OFNR or OFCR	riser rated cable for vertical runs
OFNP or OFCP	plenum rated cables for use in air-handling plenums
OFN-LS	low smoke densitity

Color Codes: Fiber Optic Cable

Cable Jackets

Colors of cable jackets for identifying indoor fiber optic cable are not standardized. Typical colors are as follows:

Premises cables (Per TIA-598C):

Fiber Types	Color Codes		
	Non-Military	Military	Printed On Cable
Multimode (50/125) (TIA-492AAAB) (OM2)	Orange	Orange	50/125
Multimode (50/125) (850 nm Laser-optimized) (TIA-492AAAC) (OM3)	Aqua	Undefined	850 LO 50/125
Multimode (62.5/125) (TIA-492AAAA) (OM1)	Orange	Slate	62.5/125
Multimode (100/140) (Obsolete)	Orange	Green	100/140
Single-mode (TIA-492C000 / TIA-492E000)	Yellow	Yellow	SM/NZDS or SM
Polarization Maintaining Single-mode	Blue	Undefined	Undefine

NOTES:

1) Natural jackets with colored tracers may be used instead of solid-color jackets.

2) Because of the limited number of applications for these fibers, print nomenclature are to be agreed upon between manufacturer and enduser

3) Other colors may be used providing that the print on the outer jacket identifies fiber classifications per subclause 4.3.3.

4) For some Premises Cable functional types (e.g., plenum cables), colored jacketing material may not be available. Distinctive jacket colors for other fiber types may be considered for addition to Table 3 at some future date.

Color Codes: Connectors
Since the earliest days of fiber optics, orange, black or gray was multimode and yellow singlemode. However, the advent of metallic connectors like the FC and ST made color

coding difficult, so colored boots were often used. The TIA 568 color code for connector bodies and/or boots is **Beige** for multimode fiber, **Blue** for singlemode fiber, and **Green** for APC (angled) connectors.

Outside plant cables:

These are typically black to prevent UV radiation damage.

Some indoor cables are black or other colors. Refer to manufacturer's datasheets or cable jacket markings to determine the fibers in the cable.

Color Codes: Fiber
Fiber color codes are specified by TIA/EIA 598-A. In loose tube cables, this color code will be used for tubes as well as fibers within the tubes and sub-groups.

Fiber No.	Color
1	Blue
2	Orange
3	Green
4	Brown
5	Slate
6	White
7	Red
8	Black
9	Yellow
10	Violet
11	Rose
12	Aqua

Part 5: Installing Fiber Optic Cable

Fiber optic cable may be installed indoors or outdoors using several different installation processes. Outdoor cable may be direct buried, pulled or blown into conduit or innerduct, or installed aerially between poles. Indoor cables can be installed in raceways, cable trays, placed in hangers, pulled into conduit or innerduct or blown though special ducts with compressed gas. The installation process will depend on the nature of the installation and the type of cable being used.

Installation methods for both wire and optical fiber communications cables are similar. Fiber cable is designed to be pulled with much greater force than copper wire if pulled correctly, but excess stress may harm the fibers, potentially causing eventual failure.

Installation Guidelines

a) Follow the cable manufacturer's recommendations. Fiber optic cable is often custom-designed for the installation and the manufacturer may have specific instructions on its installation.
b) Check the cable length to make sure the cable being pulled is long enough for the run to prevent having to splice fiber and provide special protection for the splices.
c) Try to complete the installation in one pull. Prior to any installation, assess the route carefully to determine the methods of installation and obstacles likely to be encountered.

Pulling tension

a) Cable manufacturers install special strength members, usually aramid yarn, for pulling. Fiber optic cable should only be pulled by these strength members. Any other method may put stress on the fibers and harm them.
b) Swivel pulling eyes should be used to attach the pulling rope or tape to the cable to prevent cable twisting during the pull.
c) Cables should not be pulled by the jacket unless it is specifically approved by the cable manufacturers and an approved cable grip is used.
d) Tight buffer cable can be pulled by the jacket in premises applications if a large (~40 cm, 8 in.) spool is used as a pulling mandrel. Wrap the cable around the spool 5 times and hold gently when pulling.
e) Do not exceed the maximum pulling tension rating. Consult the cable manufacturer and suppliers of conduit, innerduct, and cable lubricants for guidelines on tension ratings and lubricant use.
f) On long runs (up to approximately 3 miles or 5 kilometers), use proper lubricants and make sure they are compatible with the cable jacket. If possible, use an automated puller with tension control and/or a breakaway pulling eye. On very long runs (farther than approximately 2.5 miles or 4 kilometers), pull from the middle out to

both ends or use an automated fiber puller at intermediate point(s) for a continuous pull.

g) When laying loops of fiber on a surface during a pull, use “figure-8” loops to prevent twisting the cable.

Bend radius

a) Do not exceed the cable bend radius. Fiber optic cable can be broken when kinked or bent too tightly, especially during pulling.
b) If no specific recommendations are available from the cable manufacturer, the cable should not be pulled over a bend radius smaller than twenty (20) times the cable diameter.
c) After completion of the pull, the cable should not have any bend radius smaller than ten (10) times the cable diameter.

Twisting cable

a) Do not twist the cable. Twisting the cable can stress the fibers. Tension on the cable and pulling ropes can cause twisting.
b) Use a swivel pulling eye to connect the pull rope to the cable to prevent pulling tension causing twisting forces on the cable.
c) Roll the cable off the spool instead of spinning it off the spool end to prevent putting a twist in the cable for every turn on the spool.
d) When laying cable out for a long pull, use a "figure 8" on the ground to prevent twisting. The figure 8 puts a half twist in on one side of the 8 and takes it out on the other, preventing twists.

Vertical cable runs

a) Drop vertical cables down rather than pulling them up whenever possible.
b) Support cables at frequent intervals to prevent excess stress on the jacket. Support can be provided by cable ties (tightened snugly, not tightly enough to deform the cable jacket) or Kellems grips.
c) Use service loops can to assist in gripping the cable for support and provide cable for future repairs or rerouting.

Use Of Cable Ties

Fiber optic cables, like all communications cables, are sensitive to compressive or crushing loads. Cable ties used with many cables, especially when tightened with an installation tool, are harmful to fiber optic cables, causing attenuation and potential fiber breakage.

a) When used, cable ties should be hand tightened to be snug but loose enough to be moved along the cable by hand. Then the excess length of the tie should be cut off to prevent future tightening.

b) Hook-and-loop fastener ties are preferred for fiber optic cables, as they cannot apply crush loads sufficient to harm the cable.

Cable Plant Hardware

All premises hardware and support structures should follow the recommendations of TIA/EIA 569. Outside plant hardware and installation equipment should follow manufacturer's recommendations.

Cable Racks, Trays, Conduit and Innerduct

a) Outside plant cables can be installed nderground in conduit or innerduct or direct buried, depending on the cable type. Aerial cable installation may use cables lashed to a support messenger cable or be self-supporting. Underwater cable installation must follow manufacturer's directions.
b) Premises cabling can be installed in cable trays, ladder racks, J-hooks, or other appropriate support structures.
c) Building cables can be installed directly, but installing them inside plenum-rated innerduct provides extra protection for the fiber cable. Innerduct is bright orange and will provide a good way to identify fiber optic cable and protect it from damage.

Fiber Optic Splicing and Termination Hardware

a) Breakout kits: The fibers in loose tube cables have only the 250 micron primary buffer coating. Use breakout kits to separate and protect individual fibers in a loose tube cable for termination directly on the fibers.
b) Splice enclosures: For long cable runs outside, splices are necessary to connect lengths of cable. Splices require protection that is provided by a sealed splice closure. Choose closures with adequate space for the number of fibers in the cables and port locations appropriate for the final mounting. Splice closures can be sealed and buried in the ground, placed in a vault or suspended aerially. Outside plant cables terminted in buildings may also need closures if they are terminated by splicing on pre-terminated pigtails as is common.
c) Splice panels and patch panels: Terminate or splice distribution cables inside panels or boxes to protect the fibers from damage. Boxes or panels may be rack- or wall-mounted. All should have locks to prevent unauthorized entry.
d) Racks and cabinets: Enclosures for patch panels and splice panels are used to terminate and organize cables. Use appropriate cable management hardware on the racks to route and separate cables to minimize potential for damage and facilitate moves, adds and changes.
e) Take care with all splicing and termination hardware to maintain cable bend radiuses, prevent pinching or kinking of fibers and separate fibers to allow for future restoration, moves or other work.

Part 6: Fiber Optic Termination

Fiber optic termination processes vary according to the types of fiber being terminated, the style of connectors or splices used and the termination process appropriate for that connector. Fiber optic cable can be terminated in two ways, using:

1) Connectors that mate two fibers to create a temporary joint and/or connect the optical fiber to network equipment.
2) Splices which create a permanent joint between two fibers.

The decision whether to use connectors or splices depends on the application. All terminations must be of the right style, installed in a manner that provides low light loss and back reflection and protected against the expected environment, dirt or damage while in use.

Choice of connector

Fiber optic connectors are manufactured in a number of different styles (e.g., ST, SC, LC, MT-RJ) that attach to the fibers in a fiber optic cable by a number of different methods (e.g., epoxy polish, prepolished/splice, etc.)

The connectors used in the cable plant being installed should:
1) Be compatible with the fiber optic cabling,
1) Be compatible with the equipment intended for use on the cabling
2) Provide adequate optical performance (loss and return loss)
3) Be compatible with the operating environment (temperature, humidity, etc.) of the installation and
4) Be compatible with like style connectors. All fiber optic connectors used should have a reference FOCIS document (Fiber Optic Connector Intermateability Standard) published by TIA/EIA.

Fiber optic connectors may be field installed by direct attachment to the cable or by splicing preterminated pigtails onto the installed cable. Multimode connectors are generally installed directly onto fibers in the field while singlemode cables are more likely to be terminated by splicing on preterminated pigtails.

Termination types

Several different types of terminations are available for optical fibers. Follow the manufacturer's directions exactly for the termination process used to ensure best connector performance and reliability.

a) Adhesive Terminations

Many connectors use epoxies or other adhesives to hold the fiber in the connector. Use only the specified epoxy, as the fiber-to-ferrule bond is critical for low loss and long term reliability.

1. Epoxy/Polish: The fiber is glued into the connector with two-part epoxy and the end polished with special polishing film. This method provides the most reliable connection and lowest losses. The epoxy can be allowed to set overnight or cured in a special oven. A "heat gun" should not be used to cure the epoxy as the uneven heat may not cure all the epoxy or may overheat it which will prevent curing.
2. Hot Melt: This connector is similar to the epoxy/polish connector but already has the adhesive (a heat set glue) inside the connector. The adhesive is liquefied in an oven before the fiber can be inserted. The fiber is secured when the adhesive cools.
3. Anaerobic Adhesives: These connectors use a quick-setting adhesive instead of the epoxy. They may use a single part adhesive or an adhesive and setting agent. Some adhesives do not have the wide temperature range of epoxies, so they should only be used indoors unless otherwise specified.

b) Crimp/Polish or Crimp/Cleave Terminations

These connectors use a crimp on the fiber to hold it in the connector ferrule. The fiber can be polished like an adhesive connector or cleaved with a special tool. Ensure the crimp is made properly to prevent fiber pistoning (pulling back or pushing forward in the connector ferrule.)

c) Prepolished/Splice

These connectors have a short stub of fiber already epoxied into the ferrule and polished. Termination requires cleaving a fiber, inserting it into the back of the connector like a splice and crimping. The loss of these connectors will generally be higher than adhesive connectors, since they include a connector loss plus a splice loss in every connector. To achieve low loss, the fiber must be cleaved properly, which requires a good cleaver (prefereably the type used with fusion splicers) and good technique. Ensure the crimp is made properly to prevent fiber pistoning (pulling back in the connector ferrule.) The termination process can be monitored with a visual fault locator.

Termination process

a) Whichever process is used for termination, follow the manufacturer's instructions carefully.
b) Use only adhesives approved by the manufacturer, and employ adhesive curing times in accordance with the manufacturer's instructions.
c) When special tools are required, use them in the appropriate manner.
d) Once installation is completed, connectors should be covered with an appropriate dust cap and stored in a safe location awaiting testing or connection to network equipment.

Connector performance

Connector performance shall be within industry normal limits or as specified in TIA/EIA 568-B.3. Connector performance may be specified by end users at a different value, and if so, those values shall be used for acceptance. Since TIA 568 includes bothe adhesive/polish and prepolished/splice connectors, the limit is set high to accommodate all types at 0.75 dB. Adhesive polish connectors will generally have losses well under 0.5 dB.

Performance verification

Following completed installation and termination, all terminated cables must be tested. The section on testing below provides more detail on testing requirements at the conclusion of installation.

a) Examine all connectors requiring polishing with a microscope for proper end finish, cracks, scratches or dirt per FOTP-57.
b) Test all fibers in all cables for loss using an OLTS power meter and source. Test multimode cables using TIA/EIA 526-14 Method B, and singlemode cables using TIA/EIA 526-7 (single mode). Total loss shall be less than the calculated maximum loss for the cable based on appropriate standards or customer specifications as determined in a loss budget analysis done in the design phase.

Fiber polarization/End To End Connections

In fiber networks, separate fibers are typically used for transmission in each direction, therefore it is necessary to identify the fiber connected to the transmitter and receiver at each end.

a) Duplex connectors such as the duplex SC or MT-RJ are polarized, that is they are keyed to allow connection in only one orientation. Follow the polarization rules given in TIA/EIA 568-B3, Section 5.2.4.
b) Simplex connectors should be documented for connections and when allocated to the transceiver of networking equipment, marked for transmit and receive at each end of the link.

Fiber Optic Splices

Types of splices

Splices are a permanent joint or connection between two fibers. There are two basic types of splices, fusion and mechanical.

a) Fusion Splices
   These "weld" the two fibers together usually in an electric arc. Fusion splicers are generally automated and produce splices that have minimal losses. Fusion splicing

IPR2023-01363
Amphenol EX1031 Page 84

should not be performed in a dusty or explosive atmosphere as the electric arc may cause an explosion or fire.

b) Mechanical Splices
These align two fibers in a ferrule or v-groove with index-matching gel or adhesive between the fibers to reduce loss and back reflection. Mechanical splices are used for temporary restoration as well as permanent joints.

Splice performance

Splice performance shall be within industry accepted limits or as specified in TIA/EIA 568. While TIA-568 specifies 0.3 dB loss for both multimode and singlemode splices, singlemode fusion splices are typically under 0.1 dB. If splice performance may be specified by end users at a different value, and if so, those values shall be used for acceptance.

Splice performance verification

End-to-end tests of fiber optic cable loss include the losses caused by splices. If the cable loss exceeds the calculated maximum value, or if the customer requires splice loss verification, test the cable with an OTDR to analyze the loss of individual components (fiber, connectors, and splices) in the cable. Test splice loss in both directions and average the measured values to reduce the directional effects of OTDR measurements.

Part 7: Testing the Installed Fiber Optic Cable Plant

During the design phase, each cable run should have a “Loss Budget” calculated based on component specifications. After installation, test each fiber in all fiber optic cables for verification of proper installation by comparing measured loss to the calculated loss from the Loss Budget. Perform the following tests:

a) Continuity testing to determine that the fiber routing and/or polarization is correct and documentation is proper.
b) End-to-end insertion loss using an OLTS power meter and source. Test multimode cables using TIA/EIA 526-14 Method B, and singlemode cables using TIA/EIA 526-7 (single mode). Total loss shall be less than the calculated maximum loss for the cable based on Loss Budget calculations using appropriate standards or customer specifications.
c) Optional OTDR testing may be used to verify cable installation and splice performance. However, OTDR testing shall not be used to determine cable loss. Use of an OTDR in premises applications may be inappropriate if cables are short.
d) If the design documentation does not include cable plant length, and this is not recorded during installation, read the length from the distance markingd on the cbale jacket or test the length of the fiber using the length feature available on an OTDR, or some OLTSs.
e) If testing shows variances from expected losses, troubleshoot the problems and correct them.

Continuity Testing

Perform continuity testing of optical fibers using a visual fiber tracer, visual fault locator, or OLTS power meter and source. Trace the fiber from end to end through any interconnections to ensure that the path is properly installed, and that polarization and routing are correct and documented.

Insertion Loss

Insertion loss refers to the optical loss of the installed fibers when measured with a test source and power meter (OLTS). Test multimode cables using TIA/EIA 526-14 Method B, and singlemode cables using TIA/EIA 526-7 (single mode).

a) Test multimode fiber at 850 and 1300 nm, and singlemode fiber at 1310 and 1550 nm, unless otherwise required by other standards or customer requirements.
b) Test reference test cables to verify quality and clean them often.
c) Cabling intended for use with high speed systems using laser sources may be tested with appropriate laser sources to ensure that tests verify performance with that type of source.

OTDR Testing

The optical time domain reflectometer (OTDR) uses optical radar-like techniques to create a picture of a fiber in an installed fiber optic cable. The picture, called a signature or trace, contains data on the length of the fiber, loss in fiber segments, connectors, splices and loss caused by stress during installation.

OTDRs are used to verify the quality of the installation or for troubleshooting. However, OTDR testing shall not be used to determine cable loss.

OTDRs have limited distance resolution and may show confusing artifacts when testing short cables typical of premises applications. If OTDR testing of premises cables is desired, experienced personnel should evalute the appropriateness of the tests.

OTDR testing should only performed by trained personnel, using certified equipment designed for the purpose. The technicians performing the tests should be trained not only in operation of the OTDR equipment, but also in the interpretation of OTDR traces.

IPR2023-01363
Amphenol EX1031 Page 87

Part 8: Administration, Management, and Documentation

Documentation of the fiber optic cable plant is an integral part of the design, installation and maintenance process for the fiber optic network. Documenting the installation properly will facilitate installation, allow better planning for upgrading, simplify testing and future moves, adds and changes.

Documentation of the fiber optic cable plant should follow ANSI/TIA/EIA-606, Administration Standard for the Telecommunications Infrastructure of Commercial Buildings.

Fiber optic cables, especially those used for backbone cables, may contain many fibers that connect a number of different links going to several different locations with interconnections at patch panels or splice closures. The fiber optic cable plant should be documented as to the exact path that every fiber in each cable follows, including intermediate connections and every connector type.

Documentation should also include insertion loss data and optional OTDR traces.

Part 9: References:

The Fiber Optic Technicians Manual (FOTM) by Jim Hayes, Thomson Delmar Learning,
ISBN 1-4018-9699-5

NECA-301-2004 Standard For Installing And Testing Fiber Optic Cables (NECA-301), NECA Codes and Standards, 3 Bethesda Metro Center, Bethesda, MD 20814

The Fiber Optic Association, Inc. (FOA) web site, www.thefoa.org including "Tech Topics"

Note: This information is provided by The Fiber Optic Association, Inc. as a benefit to those interested in designing, manufacturing, selling, installing or using fiber optic communications systems or networks. It is intended to be used as a overview and guideline and in no way should be considered to be complete or comprehensive. These guidelines are strictly the opinion of the FOA and the reader is expected to use them as a basis for creating their own documentation, specifications, etc. The FOA assumes no liability for their use.

https://web.archive.org/web/20061022230951/http://www.vdvworks.com/LennieLw/llguide.pdf

VDV Works Presents

Lennie Lightwave's *New* Guide to Fiber Optics

Lennie has been involved in fiber optics since he first went to "Fiber U" - Fotec's fiber optic installer conference in 1993. Lennie is now working with "VDV Works," a company that provides training, training materials and web content on fiber optics, structured cabling, computer networking and telecommunications.

This guide is the outcome of more than 25 years of experience in fiber optics from Lennie and the VDV Works staff.

For you it's easy to learn more about fiber optics! All you have to do is keep reading.....

Also see Lennie online at www.LennieLightwave.com, where you can also see our program on OTDRs , "virtual hands-on" explanation of fiber optic termination and "virtual hands-on" explanation of fiber optic testing.

Check back often or visit VDV Academy at http://www.vdvacademy.com/ and see how we'll keep adding material to keep everything up to date. Feel free to send us your comments at lennie@lennielightwave.com - tell us how you like it and what you would like to see us change or add.

Lennie's Uncle Ted is the expert on structured cabling, including Cat 5. See Uncle Ted's online guide to communications cabling at http://www.vdvworks.com/UncleTed/.

Get certified in structured cabling and fiber optics. VDV Academy programs are pre-approved for FOA and SCA certification training, making it much easier to get yourself or your school approved by these organizations!

© 2002-6, VDV Works LLC

Fiber Optic Jargon

What is fiber optics?

Picture sending signals zipping along from one location to another in the form of light guided through thin fibers of glass or plastic. These signals can be analog or digital - voice, data or video information and fiber can transport more information longer distances in less time than any copper wire.

It's powerful and fast, fast, fast!

First get to know the language - the "jargon" - here's a list of terms you should get to know:

Metric System: Fiber Optics, as a universal technology, utilizes the metric system as the standard form of measurement. Several of the more common terms:

Meter: 39.37 inches.
Kilometer: 1000 meters / 3,281 feet / 0.62 miles.
Micron: 1/1,000,000 th of a meter. 25 microns equal 0.001 inch. This is the common term of measurement for fibers.
Nanometer: One billionth of one meter. This term is commonly used in the fiber optics industry to express wavelength (or color) of transmitted light.

Let's Start With Fiber

Optical Fiber: Thin strands of highly transparent glass or sometimes plastic that guide light.

Core: The center of the fiber where the light is transmitted.

Cladding: The outside optical layer of the fiber that traps the light in the core and guides it along - even through curves.

Buffer coating or primary coating: A hard plastic coating on the outside of the fiber that protects the glass from moisture or physical damage.

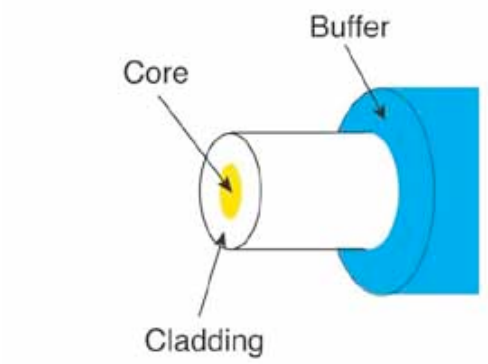

Mode: A single electromagnetic field pattern (think of a ray of light) that travels in fiber.

Multimode fiber: has a bigger core (almost always 62.5 microns - a micron is one one millionth of a meter - but sometimes 50 microns) and is used with LED sources at wavelengths of 850 and 1300 nm for short distance, lower speed networks like LANs.

Singlemode fiber: has a much smaller core, only about 9 microns, and is used for telephony and CATV with laser sources at 1300 and 1550 nm. It can go very long distances at very high speeds.

Both multimode and singlemode fiber have an outside diameter of 125 microns - about 5 thousandths of an inch - just slightly larger than a human hair.

Plastic optical fiber (POF): is a large core (about 1mm) multimode fiber that can be used for short, low speed networks. POF is used in consumer HiFi and starting to be used as part of a new standard for car communication systems called MOST (go to http://www.mostcooperation.com/)

Terms that describe fiber optic cable:

Cable: Fiber needs protection to survive all the places it gets installed and it's the cable that provides it. Cables may have from one to hundreds of fibers inside.

Jacket: The tough outer covering on the cable. Cables installed inside buildings must meet fire codes by using special jacketing materials.

Strength members: Aramid fibers (Kevlar is the duPont trade name) used to pull the cable. The term is also used for the fiberglass rod in some cables used to stiffen it to prevent kinking.

Armor: Discourages rodents from chewing through it.

Termination:

Connector: A non-permanent device for connecting two fibers or fibers to equipment where they are expected to be disconnected occasionally for testing or rerouting. It also provides protection to both fibers. (Parts for an ST connector are shown.)

Ferrule: A tube which holds a fiber for alignment, usually part of a connector

Splice: a permanent joint between two fibers

Mechanical Splice: A splice where the fibers are aligned created by mechanical means

Fusion Splice: A splice created by welding or fusing two fibers together

© 2002-6, VDV Works LLC www.vdvworks.com LLGuide6.doc, 9/16/06, 3

Fusion Splicer: An instrument that splices fibers by fusing or welding them, typically by electrical arc.

Hardware: Terminations and Splices require hardware for protection and management: patch panels, splice closures, etc.

Fiber Performance Specifications

Terms you use when you want to take your measurements:

Attenuation: The reduction in optical power as it passes along a fiber, usually expressed in decibels (dB). See optical loss

Bandwidth: The range of signal frequencies or bit rate within which a fiber optic component, link or network will operate.

Decibels (dB): A unit of measurement of optical power which indicates relative power. A -10 dB means a reduction in power by 10 times, -20 dB means another 10 times or 100 times overall, -30 means another 10 times or 1000 times overall and so on.

dB: Optical power referenced an arbitrary zero level

dBm: Optical power referenced to 1 milliwatt

Micron (m): A unit of measure used to measure wavelength of light.

Nanometer (nm): A unit of measure used to measure the wavelength of light (meaning one one-billilonth of a meter)

Optical Loss: The amount of optical power lost as light is transmitted through fiber, splices, couplers, etc, expressed in dB.

Optical Power: is measured in "dBm", or decibels referenced to one miliwatt of power. while loss is a relative reading, optical power is an absolute measurement, referenced to standards. You measure absolute power to test transmitters or receivers and relative power to test loss.

Scattering: The change of direction of light after striking small particles that causes loss in optical fibers and is used to make measurements by an OTDR

Wavelength: A term for the color of light, usually expressed in nanometers (nm) or microns (m). Fiber is mostly used in the infrared region where the light is invisible to the human eye.

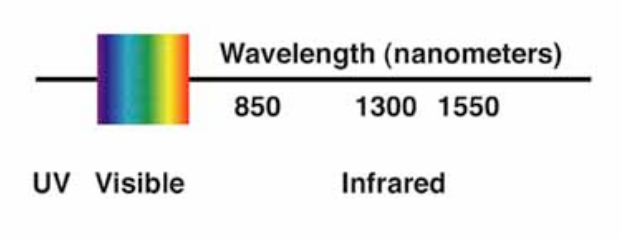

Terms that describe the tools you will need for installation and termination:

Jacket Slitter or Stripper: A cutter for removing the heavy outside jacket of cables

Fiber Stripper: A precise stripper used to remove the buffer coating of the fiber itself for termination. There at three types in common use, called by their trade names: "Miller Stripper", "No-Nik" and "Micro Strip."

Cleaver: A tool that precisely "breaks" the fiber to produce a flat end for polishing or splicing.

Scribe: A hard, sharp tool that scratches the fiber to allow cleaving.

Polishing Puck: for connectors that require polishing, the puck holds the connector in proper alignment to the polishing film.

Polishing Film: Fine grit film used to polish the end of the connector ferrule.

Crimper: A tool that crimps the connector to the aramid fibers in the cable to add mechanical strength.

Terms that describe test equipment you will need:

Optical Power Meter: An instrument that measures optical power from the end of a fiber

Test Source: an instrument that uses a laser or LED to send an optical signal into fiber for testing loss of the fiber

Optical Loss Test Set (OLTS): A measurement instrument for optical loss that includes both a meter and source

Reference Test Cables: short, single fiber cables with connectors on both ends, used to test unknown cables.

Mating Adapter: also called splice bushing or couplers, allow two cables with connectors to mate.

Fiber Tracer: An instrument that allows visual checking of continuity and tracing for correct connections

Visual Fault Locator: A device that allows visual tracing and testing of continuity.

Microscope: used to inspect the end surface of a connector for flaws or dirt.

OTDR: An instrument that uses backscattered light to find faults in optical fiber and infer loss from only one end of the cable.

© 2002-6, VDV Works LLC www.vdvworks.com LLGuide6.doc, 9/16/06, 6

The Basics of Fiber Optics

Getting Started in Fiber Optics - You need tools, test equipment and - most of all - training!

This guide will help you get started by providing very basic information (we will also point you to more advanced studies) and demonstrating that you don't need to break the bank to break into the field.

What is "Fiber Optics"? And a short history.
It's the communications technology that works by sending signals down hair thin strands of glass fiber (and sometimes plastic fiber.) It began about 30 years ago in the R&D labs (Corning, Bell Labs, ITT UK, etc.) and was first installed in Chicago in 1976. By the early 1980s, fiber networks connected the major cities on each coast.
Bu the mid-80s, fiber was replacing all the telco copper, microwave and satellite links. In the 90s, CATV discovered fiber and used it first to enhance the reliability of their networks, a big problem. Along the way, the discovered they could offer phone and Internet service on that same fiber and greatly enlarged their markets.
Computers and LANs started using fiber about the same time as the telcos. Industrial links were among the first as the noise immunity of fiber and its distance capability make it ideal for the factory floor. Mainframe storage networks came next, the predecessors of today's fiber SANs (storage area networks.)
Other applications developed too: aircraft, ship and automobile data busses, CCTV for security, even links for consumer digital stereo!
Today fiber optics is either the dominant medium or a logical choice for every communication system.

Which Fiber Optics?

Whenever you read an article or talk to someone about fiber optics, you need to know the point of view of the writer. Fiber optics, you see, is not all the same. Is the writer discussing "outside plant" fiber optics as used in telephone networks or CATV. Or is the article about "premises" fiber optics as found in buildings and campuses?
Just like "wire" which can mean lots of different things - power, security, HVAC, CCTV, LAN or telephone - fiber optics is not all the same. And this can be a big source of confusion to the novice. Lets define our terms.

Outside Plant (OSP)
Telephone companies, CATV and the Internet all use lots of fiber optics, most of which is outside buildings. It hangs from poles, is buried underground, pulled through conduit or is even submerged underwater. Most of it goes relatively long distances, from a few thousand feet to hundreds of miles.
Outside plant installations are all singlemode fiber (we'll define the fiber types in the next chapter),

IPR2023-01363
Amphenol EX1031 Page 96

and cables often have very high fiber counts, up to 288 fibers. Cable designs are optimized for resisting moisture and rodent damage. Installation requires special pullers or plows, and even trailers to carry giant spools of cable.
Long distances mean cables are spliced together, since cables are not longer than about 4 km (2.5 miles), and most splices are by fusion splicing. Connectors (SC, ST or FC styles) on factory made pigtails are spliced onto the end of the cable. After installation, every fiber and every splice is tested with an OTDR.
If this sounds like big bucks, you are right! The installer usually has a temperature controlled van or trailer for splicing and/or a bucket truck. Investments in fusion splicers and OTDRs can add up to over $100,000 alone.
Contractors doing outside plant work are few and far between. Most outside plant telephone installs are done by the telco themselves, while a small number of large, specialized installers do CATV work.

Premises Cabling
By contrast, premises cabling- cabling installed in a building or campus - involves short lengths, rarely longer than a few hundred feet, with 2 to 48 fibers per cable typically. The fiber is mostly multimode, except for the enlightened user who installs hybrid cable with both multimode and singlemode fibers.

Splicing is practically unknown in premises applications. Cables between buildings can be bought with double jackets, PE for outside plant protection over PVC for building applications requiring flame retardant cable jackets, so cables can be run continuously between buildings.
Today's connectors often have lower loss than splices, and patch panels give more flexibility for moves, adds and changes.
Most connectors are ST style with a few SCs here and there. Termination is by installing connectors directly on the ends of the fibers, primarily using adhesive technology or occasionally some other variety of termination method. Testing is done by a source and meter, but every installer should have a flashlight type tracer to check fiber continuity and connection.
Unlike the outside plant technician, the premises cabler (who is often also installing the power cable and Cat 5 for LANs too!) probably has an investment of less than $2,000 in tools and test equipment.
There are thousands of cabling installers who do fiber optic work. They've found out it isn't "rocket science," and their small initial investment in training, tools and test equipment is rapidly paid back.

The Installers
Few installers do both outside plant and premises cabling. The companies that do are usually very large and often have separate divisions doing each with different personnel. Most contractors do nothing but premises cabling.

Fiber vs Copper you may be surprised by who wins this contest!

IPR2023-01363
Amphenol EX1031 Page 97

If you are already terminating copper wire then you are well along in learning to install fiber.

Twenty years ago, fiber was just being introduced and required PhD's from Bell Labs to install it while copper wire was easy to install. Today it is often the opposite. Because fiber is so powerful, at today's network speeds fiber is hardly working hard at all and can look to the future of ten gigabit speeds with confidence. Copper on the other hand, can handle gigabit Ethernet but only if it is carefully installed and tested with very expensive test equipment and components. Even the experts have to be very careful because it has little "headroom".

Also, if you are currently working with copper, you also have to know that LAN copper cable is delicate. It only has a 25 pound pulling tension limit and kinks will ruin the high speed performance. With fiber - even though it's glass fiber - it has more strength and greater tolerance to abuse than copper wire. (What do you think gives the strength to your "fiberglass" boat?)

OK, you might say, I can buy everything you've said so far, but isn't fiber more expensive?
Telcos and CATV operators use fiber because it's much cheaper. Telcos are now using fiber instead of copper to directly connect homes! They optimize their network to take advantage of fiber's speed and distance advantages. In LANs, you need to follow the EIA/TIA 568 B.3 standard for centralized fiber to optimize the fiber usage, and then it can be cheaper than copper. How about test equipment? Guess again Fiber optic test equipment costs lots less than Cat 5e/6 testers. See Networks where we will show you how the setup for a fiber network has some surprising savings.

The Secret To Success In Fiber Optics Is Training!
You wouldn't try to drive a truck or fly a plane without taking lessons. Likewise for improving your golf or tennis game. Well, the secret to fiber optics is training too. With some basic knowledge and hands-on practice gained in a training course, fiber is pretty easy to install.

Where to get training?
Well, you can start right here, with Lennie of course! But this guide is only designed to get you started and you should have "hands-on" training leading to a recognized certification program to be qualified to install fiber. First, check the VDV Works website for information on advanced training and organizations that offer training. Also check the website of the Fiber Optic Association at http://www.TheFOA.org. for the leading fiber optic certification program in the industry. Finally, take advantage of the training offered by manufacturers and distributors whenever you can, often this training is free or cheap!

IPR2023-01363
Amphenol EX1031 Page 98

Standards

Most of what we call standards are voluntary standards, created by industry groups to insure product compatibility. They are not "codes" or actual laws that you must follow to be in compliance with local ordinances.
Standards like EIA/TIA 568B (from the Electronic Industries Alliance/ Telecommunications Industry Association) which covers all of the things you need to know to install a standard premises cabling network are good guidelines for designs, but just guidelines - they are not mandatory. Standards for fiber optic components and testing have been set by several groups, but most in the US follow the EIA/TIA developed FOTP's (fiber optic test procedures) for testing. Some of the EIA procedures are also called OFSTP (optical fiber system test procedures) like OFSTP-14 for the installed cable plant.
Standards for optical power measurements are set by NIST (the US National Institute of Standards and Technology) formerly the National Bureau of Standards.
The only common mandatory standard is the NEC 770 (National Electrical Code). The NEC specifies fire prevention standards for fiber optic cables. If a cable doesn't have a NEC rating - don't install it - it won't pass inspection!

A complete listing of the EIA/TIA standards is on the website of The Fiber Optic Association. Information on the EIA/TIA standards can be found on the website of most of he suppliers of structured cabling hardware.

Before we get started - Safety First!

You might think that eye damage from working with lasers would be the big concern in fiber optic installations. The reality is that high power lasers burning holes in metal or burning off warts mostly have little relevance to your typical fiber optic installation. Optical sources used in fiber optics are of much lower power levels (The exception is high power DWDM or CATV systems). Of course, you should always be careful with your eyes, especially when using a fiber optic microscope. NEVER look into a fiber unless you know no light is present - use a power meter to check it - and anyway, the light is in the infrared and you can't see anything anyway!

The real safety lecture will always be about small scraps of glass cleaved off the ends of the fibers being terminated or spliced. These scraps are very dangerous! The cleaved ends are extremely sharp and can easily penetrate your skin. If they get into your eyes, they are very hard to flush out. Don't even think about what happens if you eat one. Safety glasses are a must!

Always follow these rules when working with fiber.
1. Dispose of all scraps properly.
2. Always use a properly marked container to dispose of later and work on a black pad which makes the slivers of glass easier to spot.
3. Do not drop them on the floor where they will stick in carpets or shoes and be carried

IPR2023-01363
Amphenol EX1031 Page 99

elsewhere.
4. Do not eat or drink anywhere near the work area.

Fiber optic splicing and termination use various chemical adhesives and cleaners as part of the processes. Follow the instructions for use carefully. Remember, even simple isopropyl alcohol, used as a cleaner, is flammable.

Zero Tolerance for Dirt

With fiber optics, our tolerance to dirt is near zero. Airborne particles are about the size of the core of SM fiber- they absorb lots of light and may scratch connectors if not removed! Dirt on connectors is the biggest cause of scratches on polished connectors and high loss measurements!

1.Try to work in a clean area. Avoid working around heating outlets, as they blow dust all over you
2. Always keep dust caps on connectors, bulkhead splices, patch panels or anything else that is going to have a connection made with it.
3. Use lint free pads and isopropyl alcohol to clean the connectors.
4. Ferrules on the connectors/cables used for testing will get dirty by scraping off the material of the alignment sleeve in the splice bushing - creating a 1-2 dB attenuator. You can see the front edge of the connector ferrule getting black! Use the metal or ceramic alignment sleeve bulkheads only for testing.

Fiber

Fiber Specifications

The usual fiber specifications you will see are size, attenuation and bandwidth. While manufacturers have other specs that concern them, like numerical aperture (the acceptance angle of light into the fiber), ovality (how round the fiber is), concentricity of the core and cladding, etc., these specs do not affect you.

Fiber Itself

Fiber Optics, as we said, is sending signals down hair-thin strands of glass or plastic fiber. The light is "guided" down the center of the fiber called the "core". The core is surrounded by a optical material called the "cladding" that traps the light in the core using an optical technique called "total internal reflection." The core and cladding are usually made of ultra-pure glass, although some fibers are all plastic or a glass core and plastic cladding. The fiber is coated with a protective plastic covering called the "primary buffer coating" that protects it from moisture and other damage. More protection is provided by the "cable" which has the fibers and strength members inside an outer covering called a "jacket".

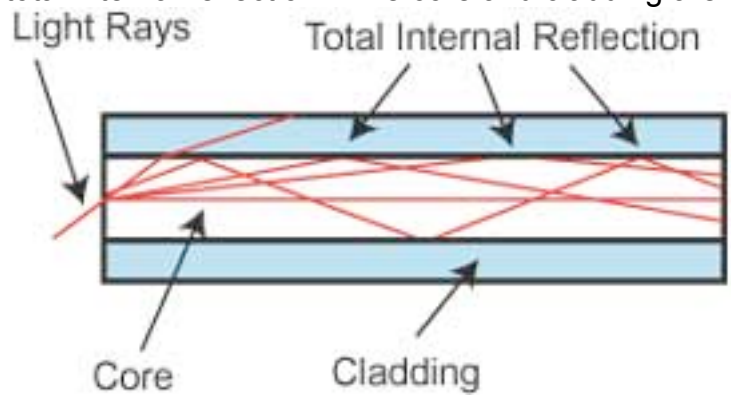

Multimode & Singlemode Fibers

Multimode & Singlemode fiber are the two types of fiber in common use. Both fibers are 125 microns in outside diameter - a micron is one one-millionth of a meter and 125 microns is 0.005 inches- a bit larger than the typical human hair.

Multimode fiber has light traveling in the core in many rays, called modes. It has a bigger core (almost always 62.5 microns, but sometimes 50 microns) and is used with LED sources at wavelengths of 850 and 1300 nm (see below!) for slower local area networks (LANs) and lasers at 850 and 1310 nm for networks running at gigabits per second or more.

Singlemode fiber has a much smaller core, only about 9 microns, so that the light travels in only one ray. It is used for telephony and CATV with laser sources at 1300 and 1550 nm.

Plastic Optical Fiber (POF) is large core (about 1mm) fiber that can only be used for

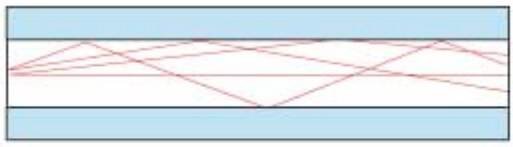
Multimode, Step-index

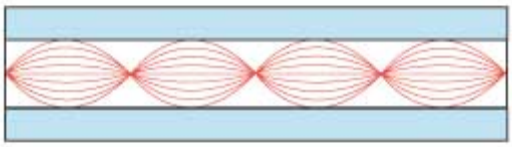
Multimode, Graded Index

Singlemode

© 2002-6, VDV Works LLC www.vdvworks.com LLGuide6.doc, 9/16/06, 12

short, low speed networks.

Step index multimode was the first fiber design but is too slow for most uses, due to the dispersion caused by the different path lengths of the various modes. Step index fiber is rare - only POF uses a step index design today.

Graded index multimode fiber uses variations in the composition of the glass in the core to compensate for the different path lengths of the modes. It offers hundreds of times more bandwidth than step index fiber - up to about 2 gigahertz.

Singlemode fiber shrinks the core down so small that the light can only travel in one ray. This increases the bandwidth to almost infinity - but it's practically limited to about 100,000 gigahertz - that's still a lot!

When It Comes To Fiber, Size Matters

Fiber, as we said, comes in two types, singlemode and multimode. Except for fibers used in specialty applications, singlemode fiber can be considered as one size and type. If you deal with long haul telecom customers, you may have to work with manufacturers on specialty singlemode fibers.

Multimode fibers originally came in several sizes, optimized for various networks and sources, but the data industry standardized on 62.5 core fiber in the mid-80s (62.5/125 fiber has a 62.5 micron core and a 125 micron cladding.) Recently, as gigabit and 10 gigabit networks have become widely used, an old fiber has been revived. The 50/125 fiber was used from the late 70s with lasers for telecom applications before singlemode fiber became available. It offers higher bandwidth with the laser sources used in the gigabit LANs and can go longer distances. While it still represents a smaller volume than 62.5/125, it is growing.

Fiber Types and Typical Specifications			
Core/Cladding	Attenuation	Bandwidth	Applications/Notes
Multimode Graded-Index			
	@850/1300 nm	@850/1300 nm	
50/125 microns	3/1 dB/km	500/500 MHz-km	Laser-rated for GbE LANs
50/125 microns Laser Optimized	3/1 dB/km	2000/500 MHz-km	Optimized for 850 nm VCSELs
62.5/125 microns	3/1 dB/km	160/500 MHz-km	Most common LAN fiber

IPR2023-01363
Amphenol EX1031 Page 102

100/140 microns	3/1 dB/km	150/300 MHz-km	Obsolete
Singlemode			
	@1310/1550 nm		
8-9/125 microns	0.4/0.25 dB/km	HIGH! ~100 Terahertz	Telco/CATV/long high speed LANs
Multimode Step-Index			
	@850 nm	@850 nm	
200/240 microns	4-6 dB/km	50 MHz-km	Slow LANs & links
POF (plastic optical fiber)			
	@ 650 nm	@ 650 nm	
1 mm	~ 1 dB/m	~5 MHz-km	Short Links & Cars

CAUTION: You cannot mix and match fibers! Trying to connect singlemode to multimode fiber can cause 20 dB loss - that's 99% of the power. Even connections between 62.5/125 and 50/125 can cause loss of 3 dB or more - over half the power.

Fiber Optic Cables

Fiber optic "cable" refers to the complete assembly of fibers, strength members and jacket. Fiber optic cables come in lots of different types, depending on the number of fibers and how and where it will be installed. Choose cable carefully as the choice will affect how easy it is to install, splice or terminate and, most important, what it will cost!

Choosing a cable - what hazards will it face?

Cable's job is to protect the fibers from the hazards encountered in an installation. Will the cables be exposed to chemicals or have to withstand a wide temperature range? What about being gnawed on by a woodchuck or prairie dog? Inside buildings, cables don't have to be so strong to protect the fibers, but they have to meet all fire code provisions. Outside the building, it depends on whether the cable is buried directly, pulled in conduit, strung aerially or whatever.

Your best bet is to contact a few cable manufacturers (two minimum, three preferred) and give them the specs. They will want to know where the cable is going, how many fibers you need and what kind (singlemode or multimode or both in what we call "hybrid" cables.) You can also have a "composite" cable that includes copper conductors for signals or power. The cable companies will evaluate your requirements and make suggestions. Then you can get competitive bids.

Since the plan will call for a certain number of fibers, consider adding spare fibers to the cable - fibers are cheap! That way, you won't be in trouble if you break a fiber or two when splicing, breaking-out or terminating fibers. And request the end user consider their future expansion needs. Most users install lots more fibers than needed, especially adding singlemode fiber to multimode fiber cables for campus or backbone applications.

Cable Types

Cables (L>R): Zipcord, Distribution, Loose Tube, Breakout

IPR2023-01363
Amphenol EX1031 Page 104

Simplex and zip cord: Simplex cables are one fiber, tight-buffered (coated with a 900 micron buffer over the primary buffer coating) with Kevlar (aramid fiber) strength members and jacketed for indoor use. The jacket is usually 3mm (1/8 in.) diameter. Zipcord is simply two of these joined with a thin web. It's used mostly for patch cord and backplane applications, but zipcord can also be used for desktop connections.

Distribution cables: They contain several tight-buffered fibers bundled under the same jacket with Kevlar strength members and sometimes fiberglass rod reinforcement to stiffen the cable and prevent kinking. These cables are small in size, and used for short, dry conduit runs, riser and plenum applications. The fibers are double buffered and can be directly terminated, but because their fibers are not individually reinforced, these cables need to be broken out with a "breakout box" or terminated inside a patch panel or junction box.

Breakout cables: They are made of several simplex cables bundled together. This is a strong, rugged design, but is larger and more expensive than the distribution cables. It is suitable for conduit runs, riser and plenum applications. Because each fiber is individually reinforced, this design allows for quick termination to connectors and does not require patch panels or boxes. Breakout cable can be more economic where fiber count isn't too large and distances too long, because is requires so much less labor to terminate.

Loose tube cables: These cables are composed of several fibers together inside a small plastic tube, which are in turn wound around a central strength member and jacketed, providing a small, high fiber count cable. This type of cable is ideal for outside plant trunking applications, as it can be made with the loose tubes filled with gel or water absorbent powder to prevent harm to the fibers from water. It can be used in conduits, strung overhead or buried directly into the ground. Since the fibers have only a thin buffer coating, they must be carefully handled and protected to prevent damage.

Ribbon Cable: This cable offers the highest packing density, since all the fibers are laid out in rows, typically of 12 fibers, and laid on top of each other. This way 144 fibers only has a cross section of about 1/4 inch or 6 mm! Some cable designs use a "slotted core" with up to 6 of these 144 fiber ribbon assemblies for 864 fibers in one cable! Since it's outside plant cable, it's gel-filled for water blocking.

Armored Cable: Cable installed by direct burial in areas where rodents are a problem usually have metal armoring between two jackets to prevent rodent penetration. This means the cable is conductive, so it must be grounded properly.

Aerial cable: Aerial cables are for outside installation on poles. They can be lashed to a messenger or another cable (common in CATV) or have metal or aramid strength members to make them self supporting.

Even More Types Are Available: Every manufacturer has it's own favorites, so it's a good idea to get literature from as many cable makers as possible. And check out the little guys; often they can save you a bundle by making special cable just for you, even in relative small quantities.

Cable Design Criteria

Pulling Strength: Some cable is simply laid into cable trays or ditches, so pull strength is not too important. But other cable may be pulled thorough 2 km or more of conduit. Even with lots of cable lubricant, pulling tension can be high. Most cables get their strength from an aramid fiber (Kevlar is the duPont trade name), a unique polymer fiber that is very strong but does not stretch - so pulling on it will not stress the other components in the cable. The simplest simplex cable has a pull strength of 100-200 pounds, while outside plant cable may have a specification of over 800 pounds.

Water Protection: Outdoors, every cable must be protected from water or moisture. It starts with a moisture resistant jacket, usually PE (polyethylene), and a filling of water-blocking material. The usual way is to flood the cable with a water-blocking gel. It's effective but messy - requiring a gel remover (use the commercial stuff - it's best- -but bottled lemon juice works in a pinch!). A newer alternative is dry water blocking using a miracle powder - the stuff developed to absorb moisture in disposable diapers. Check with your cable supplier to see if they offer it.

Fire Code Ratings: Every cable installed indoors must meet fire codes. That means the jacket must be rated for fire resistance, with ratings for general use, riser (a vertical cable feeds flames more than horizontal) and plenum (for installation in air-handling areas. Most indoor cables us PVC (polyvinyl chloride) jacketing for fire retardance. All premises cables must carry identification and flammability ratings per the NEC (National Electrical Code) paragraph 770. These ratings are:

NEC Rating	Description
OFN	optical fiber non-conductive
OFC	optical fiber conductive
OFNG or OFCG	general purpose
OFNR or OFCR	riser rated cable for vertical runs
OFNP or OFCP	plenum rated cables for use in air-handling plenums
OFN-LS	low smoke density

Cables without markings should never be installed as they will not pass inspections! Outdoor cables are not fire-rated and can only be used up to 50 feet indoors. If you need to bring an outdoor cable indoors, consider a double-jacketed cable with PE jacket over a PVC UL-rated indoor jacket. Simply remove the outdoor jacket when you come indoors and you will not have to terminate at the entry point.

Choosing A Cable

Lennie Lightwave's Guide to Fiber Optics

With so much choice in cables, it is hard to find the right one. The table below summarizes the choices, applications and advantages of each.

Cable Type	Application	Advantages
Tight Buffer	Premises	Makes rugged patchcords
Distribution	Premises	Small size for lots of fibers, inexpensive
Breakout	Premises	Rugged, easy to terminate, no hardware needed
Loose Tube	Outside Plant	Rugged, gel or dry water-blocking
Armored	Outside Plant	Prevents rodent damage
Ribbon	Outside Plant	Highest fiber count for small size

Pulling Fiber Optic Cable

Installation methods for both wire cables and optical fiber cables are similar. Fiber cable can be pulled with much greater force than copper wire if you pull it correctly. Just remember these rules:

Do not pull on the fibers, pull on the strength members only! The cable manufacturer gives you the perfect solution to pulling the cables, they install special strength members, usually duPont Kevlar aramid yarn or a fiberglass rod to pull on. Use it! Any other method may put stress on the fibers and harm them. Most cables cannot be pulled by the jacket. Do not pull on the jacket unless it is specifically approved by the cable manufacturers and you use an approved cable grip.

Do not exceed the maximum pulling load rating. On long runs, use proper lubricants and make sure they are compatible with the cable jacket. On really long runs, pull from the middle out to both ends. If possible, use an automated puller with tension control or at least a breakaway pulling eye.

Do not exceed the cable bend radius. Fiber is stronger than steel when you pull it straight, but it breaks easily when bent too tightly. These will harm the fibers, maybe immediately, maybe not for a few years, but you will harm them and the cable must be removed and thrown away!

Do not twist the cable. Putting a twist in the cable can stress the fibers too. Always roll the cable off the spool instead of spinning it off the spool end. This will put a twist in the cable for every turn on the spool! If you are laying cable out for a long pull, use a "figure 8" on the ground to prevent twisting (the figure 8 puts a half twist in on one side of the 8

and takes it out on the other, preventing twists.) And always use a swivel pulling eye because pulling tension will cause twisting forces on the cable.

Check the length. Make sure the cable is long enough for the run. It's not easly or cheap to splice fiber and it needs special protection. Try to make it in one pull, possible up to about 2-3 miles.

Conduit and Innerduct: Outside plant cables are either installed in conduit or innerduct or direct buried, depending on the cable type. Building cables can be installed directly, but you might consider putting them inside plenum-rated innerduct. This innerduct is bright orange and will provide a good way to identify fiber optic cable and protect it from damage, generally a result of someone cutting it by mistake! The innerduct can speed installation and maybe even cut costs. It can be installed quickly by unskilled labor, then the fiber cable can be pulled through in seconds. You can even get the innerduct with pulling tape already installed.

Cable Plant Hardware - fitting the pieces of the puzzle together!

These various enclosures, cabinets, racks and panels are used to protect and organize splice and termination points. The network designer should know the type of network, support systems, the routes to be taken. Then the connection/splice locations can be determined and the hardware planned.
There are lots of rules to follow, of course (the EIA/TIA 569 has something to say about all this).

Here are some examples of fiber optic hardware:

Breakout kits: They allow you to separate and protect individual fibers in a loose tube cable so it can be terminated.

Splice enclosures - for long cable runs outside, the point where cables are spliced, sealed up and buried in the ground, put in a vault of some kind or hung off a pole.

Splice panels- connect individual fibers from cables to pigtails

Patch panels - provides a centralized location for patching fibers, testing, monitoring and restoring cables.

Racks and cabinets: enclosures for patch panels and splice panels. Usually these also include cable management - without this the cables start looking like spaghetti flying everywhere in a short time!

There are tons of hardware and tons of manufacturers who make them. Be sure to choose panels that have the connections behind locked doors, since the biggest problem we see is connectors broken by people messing around in communications closets! Fiber doesn't need maintenance or inspection. Lock 'em up and only unlock it when you have to move something!

IPR2023-01363
Amphenol EX1031 Page 108

Termination

We terminate fiber optic cable two ways - with connectors that can mate two fibers to create a temporary joint and/or connect the fiber to a piece of network gear or with splices which create a permanent joint between the two fibers. These terminations must be of the right style, installed in a manner that makes them have little light loss and protected against dirt or damage in use.
No area of fiber optics has been given greater attention than termination. Manufacturers have come up with over 80 styles of connectors and and about a dozen ways to install them. There are two types of splices and many ways of implementing the splice. Fortunately for me and you, only a few types are used most applications.
Different connectors and splice termination procedures are used for singlemode and multimode connectors, so make sure you know what the fiber will be before you specify connectors or splices!

Connectors

We'll start our section on termination by considering connectors. Since fiber optic technology was introduced in the late 70s, numerous connector styles have been developed. Each new design was meant to offer better performance (less light loss and back reflection), easier and/or termination and lower cost. Of course, the marketplace determines which connectors are ultimately successful.

Connector and Splice Loss Mechanisms

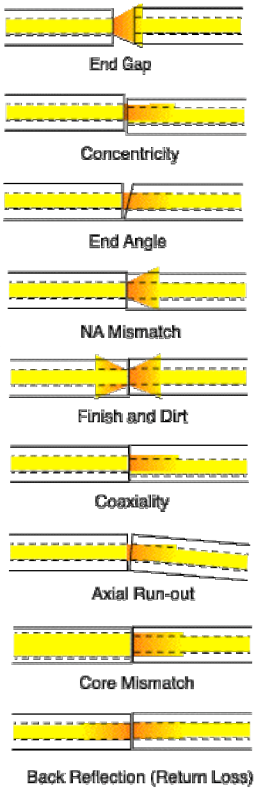

Connector and splice loss is caused by a number of factors. Loss is minimized when the two fiber cores are identical and perfectly aligned, the connectors or splices are properly finished and no dirt is present. Only the light that is coupled into the receiving fiber's core will propagate, so all the rest of the light becomes the connector or splice loss.

End gaps cause two problems, insertion loss and return loss. The emerging cone of light from the connector will spill over the core of the receiving fiber and be lost. In addition, the air gap between the fibers causes a reflection when the light encounters the change n refractive index from the glass fiber to the air in the gap. This reflection (called fresnel reflection) amounts to about 5% in typical flat polished connectors, and means that no connector with an air gap can have less than 0.3 dB loss. This reflection is also referred to as back reflection or optical return loss, which can be a problem in laser based systems. Connectors use a number of polishing techniques to insure physical contact of the fiber ends to minimize back reflection. On mechanical splices, it is possible to reduce back reflection by using non-perpendicular cleaves, which cause back reflections to be absorbed in the cladding of the fiber.

© 2002-6, VDV Works LLC www.vdvworks.com LLGuide6.doc, 9/16/06, 20

The end finish of the fiber must be properly polished to minimize loss. A rough surface will scatter light and dirt can scatter and absorb light. Since the optical fiber is so small, typical airborne dirt can be a major source of loss. Whenever connectors are not terminated, they should be covered to protect the end of the ferrule from dirt. One should never touch the end of the ferrule, since the oils on one's skin causes the fiber to attract dirt. Before connection and testing, it is advisable to clean connectors with lint-free wipes moistened with isopropyl alcohol.

Two sources of loss are directional; numerical aperture (NA) and core diameter. Differences in these two will create connections that have different losses depending on the direction of light propagation. Light from a fiber with a larger NA will be more sensitive to angularity and end gap, so transmission from a fiber of larger NA to one of smaller NA will be higher loss than the reverse. Likewise, light from a larger fiber will have high loss coupled to a fiber of smaller diameter, while one can couple a small diameter fiber to a large diameter fiber with minimal loss, since it is much less sensitive to end gap or lateral offset.

These fiber mismatches occur for two reasons. The occasional need to interconnect two dissimilar fibers and production variances in fibers of the same nominal dimensions. With two multimode fibers in usage today and two others which have been used occasionally in the past and several types of singlemode fiber in use, it is possible to sometimes have to connect dissimilar fibers or use systems designed for one fiber on another. Some system manufacturers provide guidelines on using various fibers, some don't. If you connect a smaller fiber to a larger one, the coupling losses will be minimal, often only the fresnel loss (about 0.3 dB). But connecting larger fibers to smaller ones results in substantial losses, not only due to the smaller cores size, but also the smaller NA of most small core fibers.

Guide to Fiber Optic Connectors

Check out the "spotters guide" below and you will see the most common fiber optic connectors. (All the photos are to the same scale, so you can get an idea of the relative size of these connectors.)

ST (an AT&T Trademark) has been the most popular connector for multimode networks, like most buildings and campuses. It has a bayonet mount and a long cylindrical ferrule to hold the fiber. Most ferrules are ceramic, but some are metal or plastic. It is being used less as the SC and LC gain in market share.	

SC is a snap-in connector that is widely used in singlemode systems for it's excellent performance. It's a snap-in connector that latches with a simple push-pull motion. It is also available in a duplex configuration. It is very popular in both OSP and premises networks, although the LC is becoming the connector of choice for fast (Gb/s) networks.	
LC is a new connector that uses a 1.25 mm ferrule, half the size of the ST. Otherwise, it's a standard ceramic ferrule connector, easily terminated with any adhesive. Good performance, highly favored for singlemode and fast (Gb/s) networks.	
FC/PC has been one of the most popular singlemode connectors for many years. It screws on firmly, but make sure you have the key aligned in the slot properly before tightening. It's being replaced by SCs and LCs.	
Below are some of the new Small Form Factor (SFF) connectors:	
MT-RJ is a duplex connector with both fibers in a single polymer ferrule. It uses pins for alignment and has male and female versions. Multimode only, field terminated only by prepolished/splice method.	

Opti-Jack is a neat, rugged duplex connector cleverly designed around two ST-type ferrules in a package the size of a RJ-45. It has male and female (plug and jack) versions.	
Volition is a slick, inexpensive duplex connector that uses no ferrule at all. It aligns fibers in a V-groove like a splice. Plug and jack versions, but field terminate jacks only. LX-5 is like a LC but with a shutter over the end of the fiber.	
MU looks a miniature SC with a 1.25 mm ferrule. It's more popular in Japan.	

MT is a 12 fiber connector for ribbon cable. It's main use is for preterminated cable assemblies.	

The ST/SC/FC/FDDI/ESON connectors have the same ferrule size - 2.5 mm or about 0.1 inch - so they can be mixed and matched to each other using hybrid mating adapters. This makes it convenient to test, since you can have a set of multimode reference test cables with ST connectors and adapt to all these connectors. Likewise, the LC, MU and E2000/LX-5 use the same ferrule but cross-mating adapters are not easy to find.

Connector Types

The ST is still the most popular multimode connector because it is cheap and easy to install. The SC connector was specified as a standard by the old EIA/TIA 568A specification, but its higher cost and difficulty of installation (until recently) has limited its popularity. However, newer SCs are much better in both cost and installation ease, so it has been growing in use. The duplex FDDI, ESCON and SC connectors are used for patchcords to equipment and can be mated to ST or SC connectors at wall outlets. Singlemode networks use FC or SC connectors in about the same proportion as ST and SC in multimode installations. There are some D4s out there too.

EIA/TIA 568 B allows any fiber optic connector as long as it has a FOCIS (Fiber Optic Connector Intermateability Standard) document behind it. This opened the way to the use of several new connectors, which we call the "Small Form Factor" (SFF) connectors, including AT&T LC, the MT-RJ, the Panduit "Opti-Jack," 3M's Volition, the E2000/LX-5 and MU. The LC has been particularly successful in the US.

Connector Ferrule Shapes & Polishes

Fiber optic connectors can have several different ferrule shapes or finishes, usually referred to as polishes. early connectors, because they did not have keyed ferrules and could rotate in mating adapters, always had an air gap between the connectors to prevent them rotating and grinding scratches into the ends of the fibers. Beginning with the ST and FC which had keyed ferrules, the connectors were designed to contact tightly, what we now call physical contact (PC) connectors.

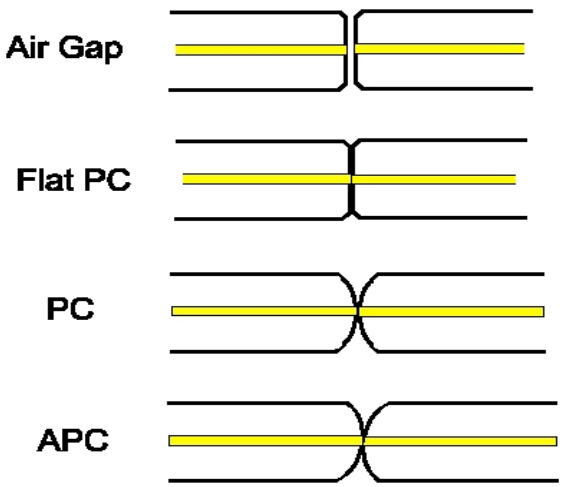

Reducing the air gap reduced the loss and back reflection (very important to laser-based singlemode systems), since light has a loss of about 5% (~0.25 dB) at each air gap and light is reflected back up the fiber. While air gap connectors usually had losses of 0.5 dB or more and return loss of 20 dB, PC connectors had typical losses of 0.3 dB and a return loss of 30 to 40 dB.
Soon thereafter, it was determined that making the connector ferrules convex would produce an even better connection. The convex ferrule guaranteed the fiber cores were in contact. Losses were under 0.3dB and return loss 40 dB or better. The final solution for singlemode systems extremely sensitive to reflections, like CATV or high bitrate telco links, was to angle the end of the ferrule 8 degrees to create what we call an APC or angled PC connector. Then any reflected light is at an angle that is absorbed in the cladding of the fiber.

Termination Procedures
***Whatever you do, follow the manufacturer's termination instructions closely*.**
Also see our "virtual hands-on" explanation of fiber optic termination.

Multimode connectors are usually installed in the field on the cables after pulling, while singlemode connectors are usually installed by splicing a factory-made "pigtail" onto the fiber. That is because the tolerances on singlemode terminations are much tighter and the polishing processes are more critical. You can install singlemode connectors in the field for low speed data networks, but you may not be able to get losses lower than 1 dB!
Cables can be pulled with connectors already on them if, and a big if, you can deal with these two problems: First, the length must be precise. Too short and you have to pull another longer one (its not cost effective to splice), too long and you waste money and have to store the extra cable length. Secondly, the connectors must be protected. Some cable and connector manufacturers offer protective sleeves to cover the connectors, but you must still be much more careful in pulling cables. You might consider terminating one end and pulling the unterminated end to not risk the connectors.
There is a growing movement to install preterminated systems but with the MT 12 multifiber connector. It's tiny not much bigger than a ST or SC, but has up to 12 fibers. Manufactures sell multifiber cables with MTs on them that connect to preterminated patch panels with STs or SCs. Works well if you have a good designer and can live with the higher loss (~1 dB) typical of these connectors.

Multimode Terminations: Several different types of terminations are available for multimode fibers. Each version has its advantages and disadvantages, so learning more about how each works helps decide which one to use.

A note on adhesives: Most connectors use epoxies or other adhesives to hold the fiber in the connector. Use only the specified epoxy, as the fiber to ferrule bond is critical for low loss and long term reliability! We've seen people use hardware store epoxies, Crazy Glue, you name it! And they regretted doing it.

Epoxy/Polish: Most connectors are the simple "epoxy/polish" type where the fiber is glued into the connector with epoxy and the end polished with special polishing film. These provide the most reliable connection, lowest losses (less than 0.5 dB) and lowest costs, especially if you are doing a lot of connectors. The epoxy can be allowed to set overnight or cured in an inexpensive oven. A "heat gun" should never be used to try to cure the epoxy faster as the uneven heat may not cure all the epoxy or may overheat some of it which will prevent it ever curing!

"Hot Melt": This is a 3M trade name for a connector that already has the epoxy (actually a heat set glue) inside the connector. You strip the cable, insert it in the connector, crimp it, and put it in a special oven. In a few minutes, the glue is melted, so you remove the connector, let it cool and it is ready to polish. Fast and easy, low loss, but not as cheap as the epoxy type, it has become the favorite of lots of contractors who install relatively small quantities of connectors.

Anaerobic Adhesives: These connectors use a quick setting adhesive to replace the epoxy. They work well if your technique is good, but often they do not have the wide temperature range of epoxies, so only use them indoors. A lot of installers are using Loctite 648, with or without the accellerator solution, that is neat and easy to use.

Crimp/Polish: Rather than glue the fiber in the connector, these connectors use a crimp on the fiber to hold it in. Early types offered "iffy" performance, but today they are pretty good, if you practice a lot. Expect to trade higher losses for the faster termination speed. And they are more costly than epoxy polish types. A good choice if you only install small quantities and your customer will accept them.

Prepolished/splice: Some manufacturers offer connectors that have a short stub fiber already epoxied into the ferrule and polished perfectly, so you just cleave a fiber and insert it like a splice. (See next section for splicing info.) While it sound like a great idea, it has several downsides. First it is very costly, five to ten times as much as an epoxy polish type. Second, you have to make a good cleave to make them low loss, and that is not as easy as you might think. Third, even if you do everything correctly, you loss will be higher, because you have a connector loss plus two splice losses at every connection! The best way to terminate them is to monitor the loss with a visual fault locator and "tweak" them.

Hints for doing field terminations

Here are a few things to remember when you are terminating connectors in the field. Following these guidelines will save you time, money and frustration.

Choose the connector carefully and clear it with the customer if it is anything other than an epoxy/polish type. Some customers have strong opinions on the types or brands of connectors used in their job. Find out first, not later!

Never, never, NEVER take a new connector in the field until you have installed enough of them in the office that you can put them on in your sleep. The field is no place to experiment or learn! It'll cost you big time!

Have the right tools for the job. Make sure you have the proper tools and they are in good shape before you head out for the job. This includes all the termination tools, cable tools and test equipment. Do you know your test cables are good? Without that, you will test good terminations as bad every time. More and more installers are owning their own tools like auto mechanics, saying that is the only way to make sure the tools are properly cared for.

Dust and dirt are your enemies. It's very hard to terminate or splice in a dusty place. Try to work in the cleanest possible location. Use lint-free wipes (not cotton swaps or rags made from old T-shirts!) to clean every connector before connecting or testing it. Don't work under heating vents, as they are blowing dirt down on you continuously.

Don't overpolish. Contrary to common sense, too much polishing is just as bad as too little. The ceramic ferrule in most of today's connector is much harder than the glass fiber. Polish too much and you create a concave fiber surface, increasing the loss. A few swipes is all it takes.

Remember singlemode fiber requires different connectors and polishing techniques. Most SM fiber is terminated by splicing on a preterminated pigtail, but you can put SM connectors on in the field if you know what you are doing. Expect much higher loss, approaching 1 dB and high back reflections, so don't try it for anything but data networks, not telco or CATV.

Change polishing film regularly. Polishing builds up residue and dirt on the film that can cause problems after too many connectors and cause poor end finish. Check the manufacturers' specs.

Put covers on connectors and patch panels when not in use. Keep them covered to keep them clean.

Inspect and test, then document. It is very hard to troubleshoot cables when you don't know how long they are, where they go or how they tested originally! So keep good records, smart users require it and expect to pay extra for good records.

Splicing

Splicing is only needed if the cable runs are too long for one straight pull or you need to mix a number of different types of cables (like bringing a 48 fiber cable in and splicing it to six 8 fiber cables - could you have used a breakout cable instead?) And of course, we use splices for restoration, after the number one problem of outside plant cables, a dig-up and cut of a buried cable, usually referred to as "backhoe fade" for obvious reasons!

Splices are "permanent" connections between two fibers. There are two types of splices, fusion and mechanical, and the choice is usually based on cost or location. Most splicing is on long haul outside plant SM cables, not multimode LANs, so if you do outside plant SM jobs, you will want to learn how to fusion splice. If you do mostly MM LANs, you may never see a splice.

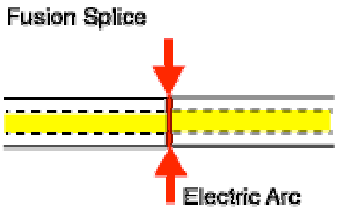

Fusion Splices are made by "welding" the two fibers together usually by an electric arc. Obviously, you don't do that in an explosive atmosphere (at least not more than once!), so

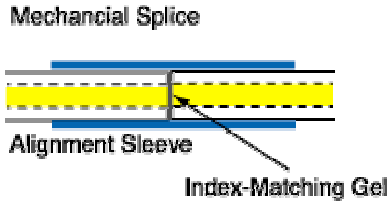

fusion splicing is usually done above ground in a truck or trailer set up for the purpose. Good fusion splicers cost $15,000 to $40,000, but the splices only cost a few dollars each. Today's singlemode fusion splicers are automated and you have a hard time making a bad splice. The biggest application is singlemode fibers in outside plant installations.

Mechanical Splices are alignment gadgets that hold the ends of two fibers together with some index matching gel or glue between them. There are a number of types of mechanical splices, like little glass tubes or V-shaped metal clamps. The tools to make mechanical splices are cheap, but the splices themselves are expensive. Many mechanical splices are used for restoration, but they can work well with both singlemode and multimode fiber, with practice.

Which Splice ?

If cost is the issue, fusion is expensive equipment and cheap splices, while mechanical is cheap equipment and expensive splices. So if you make a lot of splices (like thousands in an big telco or CATV network) use fusion splices. If you need just a few, use mechanical splices. Fusion splices give very low back reflections and are preferred for singlemode high speed digital or CATV networks. However, they don't work as well on multimode, so mechanical splices are preferred for MM, unless it is an underwater or aerial application, where the greater reliability of the fusion splice is preferred.

IPR2023-01363
Amphenol EX1031 Page 117

Fiber Optic Networks

In the telcos, singlemode fiber is used to connect long distance switches, central offices and SLCs (subscriber loop carriers, small switches in pedestals in subdivisions or office parks or in the basement of a larger building). Practically every telco's network is now fiber optics except the connection to the home. Fiber to the home (FTTH) is now cost effective - especially since most homes want the high speed services that would justify fiber optics. Look for FTTH first in new home construction.

CATV companies "overbuild" with fiber. They lash fiber cable onto the aerial "hardline" coax used for the rest of the network or pull it in the same conduit underground. The fiber allows them to break their network into smaller service areas that prevent large numbers of customers from being affected in an outage, making for better service and customer relations. The fiber also gives them a return path which they use for Internet and telephone connections, increasing their revenue potential.

LANs (local area networks) use fiber optics primarily in the backbone but increasingly to the desk. The LAN backbone often needs longer distance than copper cable (Cat 5/5e/6) can provide and of course, the fiber offers higher bandwidth for future expansion. Most large corporate LANs use fiber backbones with copper wire to the desktop. Fiber to the desk can be cost effective if properly designed.

Lots of other networks use fiber. CCTV is often on fiber for it's distance capability. Industrial plants use lots of fiber or distance and noise immunity. Utilities use it for network management, liking its immunity to noise also. The military uses it because it's hard to tap or jam. Airplanes use it for that reason too, but also like the lighter weight of fiber.

Designing Cabling Networks

I guess this is too big a topic for a overview! But we'll pass along some hints to make life easier. First and foremost, visit the work site and check it out thoroughly. Know the "standards" but use common sense in designing the installation. Don't cut corners which may affect performance or reliability. Consider what are the possible problems and work around or prevent them. There ain't no substitute for common sense here!

Fiber's extra distance capability makes it possible to do things not possible with copper wire. For example, you can install all the electronics for a network in one communications closet for a building and run straight to the desktop with fiber. With copper, you can only go about 90 meters (less than 300 feet), so you need to keep the electronics close to the desk. With fiber, you only need passive patch panels locally to allow for moves. Upgrades are easy, since the fiber is only loafing at today's network speed!

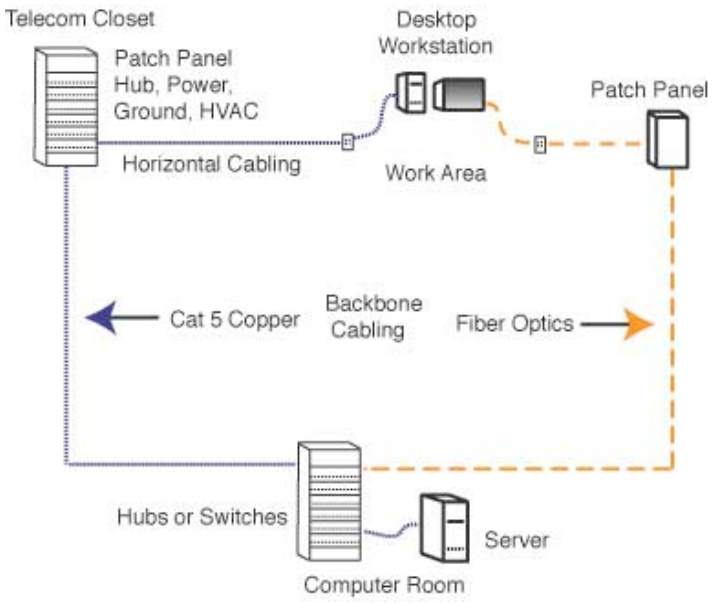

Is Copper Really Cheaper Than Fiber?

When it comes to costs, fiber optics is always assumed to be much more expensive than copper cabling. Whatever you look at - cable, terminations or networking electronics - fiber costs more, although as copper gets faster (e.g. Cat 6) it gets more expensive, almost as much as fiber. So isn't it obvious that fiber networks are more expensive than copper? Maybe not! There is more to consider in making the decision.

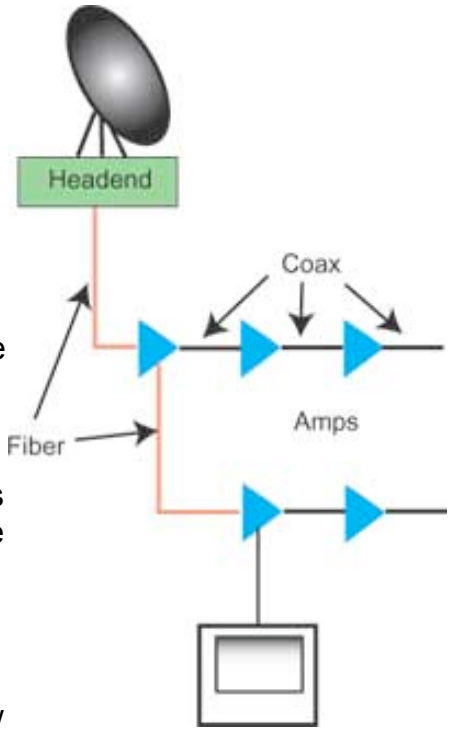

Why Use Fiber?

If fiber is more expensive, why have all the telephone networks been converted to fiber? And why are all the CATV systems converting to fiber too? Are their networks that different? Is there something they know we don't?

Telcos use fiber to connect all their central offices and long distance switches because it has thousands of times the bandwidth of copper wire and can carry signals hundreds of times further before needing a repeater. The CATV companies use fiber because it give them greater reliability and the opportunity to offer new services, like phone service and Internet connections.

Both telcos and CATV operators use fiber for economic reasons, but their cost justification requires adopting new network architectures to take advantage of fiber's strengths. A properly designed premises cabling network can also be less expensive when done in fiber instead of copper. There are several good examples of fiber being less expensive, so lets examine them.

IPR2023-01363
Amphenol EX1031 Page 119

Industrial Networks

In an industrial environment, electromagnetic interference (EMI) is often a big problem. Motors, relays, welders and other industrial equipment generate a tremendous amount of electrical noise that can cause major problems with copper cabling, especially unshielded cable like Cat 5. In order to run copper cable in an industrial environment, it is often necessary to pull it through conduit to provide adequate shielding.

With fiber optics, you have complete immunity to EMI. You only need to choose a cable type that is rugged enough for the installation, with breakout cable being a good choice for it's heavy-duty construction. The fiber optic cable can be installed easily from point to point, passing right next to major sources of EMI with no effect. Conversion from copper networks is easy with media converters, gadgets that convert most types of systems to fiber optics. Even with the cost of the media converters, the fiber optic network will be less than copper run in conduit.

Long Cable Runs

Most networks are designed around structured cabling installed per EIA/TIA 568 standards. This standard calls for 90 meters (295 feet) of permanently installed unshielded twisted pair (UTP) cable and 10 meters (33 feet) of patchcords. But suppose you need to connect two buildings or more? The distance often exceeds the 90 meters by the time you include the runs between the buildings plus what you need inside each building.

By the time you buy special aerial or underground waterproof copper cable and repeaters, you will usually spend more than if you bought some outside plant fiber optic cable and a couple of inexpensive media converters. It's guaranteed cheaper if you go more than two links (180 meters.)

Centralized Fiber LANs

When most contractors and end users look at fiber optics versus Cat 5e cabling for a LAN, they compare the same old copper LAN with fiber directly replacing the copper links. The fiber optic cable is a bit more expensive than Cat 5e and terminations are a little more too, but the big difference is the electronics which are $200 or more per link extra for fiber.

However, the real difference comes if you use a centralized fiber optic network - shown on the right of the diagram above. Since fiber does not have the 90 meter distance limitation of UTP cable, you can place all electronics in one location in or near the computer room. The telecom closet is only used for passive connection of backbone fiber optic cables, so no power, UPS, ground or air conditioning is needed. These auxiliary services, necessary with Cat 5 hubs, cost a tremendous amount of money in each closet.

In addition, having all the fiber optic hubs in one location means better utilization of the hardware, with fewer unused ports. Since ports in modular hubs must be added in modules of 8 or 16, it's not uncommon with a hub in a telecom closet to have many of the ports in a module empty . With a centralized fiber system, you can add modules more efficiently as you are supporting many more desktop locations but need never have more than a one module with open ports.

IPR2023-01363
Amphenol EX1031 Page 120

High Speed Networking

It was over a year after Gigabit Ethernet (GbE) became available on fiber optics that it finally become available on Cat 5e. It took another couple of years before GbE on copper became significantly less expensive. In order to get GbE to work over Cat 5e, the electronics must be very complicated, and consequently as expensive as fiber. A newer version is in the wings, awaiting a Cat 6 standard, but that means the version running over Cat 5e will be obsolete before it even gets started! Finally, we went to a major distributor's seminar on advanced cabling recently and the copper marketing guy told us to go fiber for GbE.

Bottom Line

So when it comes to costs, looking at the cabling component costs may not be a good way to analyze total network costs. Consider the total system and you may find fiber looks a lot more attractive.

Estimating and Bidding

Estimating is necessary to figure out what the job will cost you. First of all you'll need to set up a simple chart of all the details: the items you will need to purchase (i.e. cable, connectors, etc) and their costs. You will also need to add labor cost.

Do your homework - be sure to have an accurate idea of how long it takes for each step of the installation .

For instance, when dealing with connectors, if a manufacturer says you can terminate his connector in 3 minutes, test it for yourself in the office before you go to the site. Not only do you want to know how long it will take, but also how many good ones you get. Are you working on a "tried and true" method such as using epoxy or anaerobic adhesive with ST or SC connectors where installation estimates are well documented or a new system such as MTRJ connectors or a "cleave and leave" connector you have never done before? Big difference! The newer or more specialized the connector or the installation process, the more unpredictable the timing can be. This rule can apply to all the materials and equipment you will be using. Try to identify who will answer your questions from the companies who sold the connectors, cable and the other materials *before* you go to the job site. This will help avoid serious delays if you run into trouble.

Consider yield. You will never get every connector or splice right the first time. If you get 90% good in the field, you are a hero! Magazines periodically publish articles about the yield of various connectors tested in the field - the yield for certain connectors can be as low as 30%!

Be sure to visit the job site - you have to see for yourself what the job looks like. Get as much information as you can - walk the route carefully and note things such as what other cables are there and will they have to be removed, the condition of the building and any potential problems with moisture or excessive heat or cold, any inconsistencies from the architectural drawings, what other work is being done at the same time and how it will effect what you're doing, can you easily get your equipment where it needs to be. Bring a camera if the customer will let you - take lots of pictures! Trust us, we have seen every mistake made and more! Double - then triple check everything. You won't regret it.

Talk to the customer - be sure to understand exactly what will be required of you. You must know what types of cable, connectors, splices, hardware, etc. the customer wants (including brands - if specified). Does the customer want employees to be trained? Get all the details on this up front also. Don't be afraid to suggest alternatives that will save him (and you) money. Research the customer - how long have they been in business? Do they pay their contractors on time? Ask around - if there is a problem, it will probably surface.
Read the specifications carefully - if you see something that doesn't make sense (like the all too common one of asking for OTDR test data on short LAN cable runs), tell the customer your concerns before you bid. Don't bid blindly.

IPR2023-01363
Amphenol EX1031 Page 122

Once you have gathered all your information, you will need to bring your math skills into play and create a document (usually a spreadsheet) that allows you to transfer all this information into a "map" of the job that you and your workers can follow. Refer to chapter 14 of "The Fiber Optic Technician's Manual" for an excellent guide on how to create this document.

Bidding

Bidding is closely related to estimating, but adds in the profit margin you need to stay in business - don't forget that! If you bid accurately, you will never regret losing a job to a lower bidder, because you know that the winning bid is close to or losing money and that is not the goal of running a business. Bid accurately and you will stay in business!

Documentation

Knowing where every cable, connector, splice, patch panel, etc goes and the length of every cable is more than helpful. It can help you in bidding, buying, installation, testing, and restoration. After installation, keep test data to refer back to when you have problems.
Smart installers understand the value of documentation and understand it can lead to higher bids, but good documentation pays for itself. Smart users understand it too and are willing to pay for good documentation.

Estimating Software

Today you can get several great programs that automate the estimation process. They can access databases of costs, aggregate components and do lots more to simplify the process. Evaluate all these products - a contractors trade show is a good place to start looking at them - to see if they meet your needs.

IPR2023-01363
Amphenol EX1031 Page 123

Testing

After the cables are installed and terminated, it's time for testing. For every fiber optic cable plant, you will need to test for continuity, end-to-end loss and then troubleshoot the problems. If it's a long outside plant cable with intermediate splices, you will probably want to verify the individual splices with an OTDR also, since that's the only way to make sure that each one is good. If you are the network user, you will also be interested in testing power, as power is the measurement that tells you whether the system is operating properly.

You'll need a few special tools and instruments to test fiber optics. See Jargon in the beginning of Lennie's Guide to see a description of each instrument.

Getting Started

Even if you're an experienced installer, make sure you remember these things.

1. Have the right tools and test equipment for the job...
You will need:
Source and power meter, optical loss test set or test kit with proper equipment adapters for the cable plant you are testing.
Reference test cables that match the cables to be tested and mating adapters, including hybrids if needed
Fiber Tracer or Visual Fault Locator
Cleaning materials - lint free cleaning wipes and pure alcohol
OTDR and launch cable for outside plant jobs

2. Know how to use your test equipment
Before you start, get together all your tools and make sure they are all working properly and you and your installers know how to use them. It's hard to get the job done when you have to call the manufacturer from the job site on your cell phone to ask for help. Try all your equipment in the office before you take it into the field. Use it to test every one of your reference test jumper cables in both directions using the single-ended loss test to make sure they are all good. If your power meter has internal memory to record data be sure you know how to use this also. You can often customize these reports to your specific needs - figure all this out before you go it the field - it could save you time and on installations, time is money!

3. Know the network you're testing...
This is an important part of the documentation process we discussed earlier. Make sure you have cable layouts for every fiber you have to test. Prepare a spreadsheet of all the cables and fibers before you go in the field and print a copy for recording your test data. You may record all your test data either by hand or if your meter has a memory feature, it will keep test results in on-board memory that can be printed or transferred to a computer when you return to the office.

A note on using a fiber optic source eye safety...

Fiber optic sources, including test equipment, are generally too low in power to cause any eye damage, but it's still a good idea to check connectors with a power meter before looking into it. Some telco DWDM and CATV systems have very high power and they could be harmful, so better safe than sorry.

Fiber optic testing includes three basic tests that we will cover separately:
Visual inspection for continuity or connector checking
Loss testing
Network Testing

Visual Inspection

Visual Tracing

Continuity checking makes certain the fibers are not broken and to trace a path of a fiber from one end to another through many connections. Use a visible light "fiber optic tracer" or "pocket visual fault locator". It looks like a flashlight or a pen-like instrument with a lightbulb or LED soure that mates to a fiber optic connector. Attach a cable to test to the visual tracer and look at the other end to see the light transmitted through the core of the fiber. If there is no light at the end, go back to intermediate connections to find the bad section of the cable.

A good example of how it can save time and money is testing fiber on a reel before you pull it to make sure it hasn't been damaged during shipment. Look for visible signs of damage (like cracked or broken reels, kinks in the cable, etc.) . For testing, visual tracers help also identify the next fiber to be tested for loss with the test kit. When connecting cables at patch panels, use the visual tracer to make sure each connection is the right two fibers! And to make certain the proper fibers are connected to the transmitter and receiver, use the visual tracer in place of the transmitter and your eye instead of the receiver (remember that fiber optic links work in the infrared so you can't see anything anyway.)

Visual Fault Location

A higher power version of the tracer uses a laser that can also find faults. The red laser light is powerful enough to show breaks in fibers or high loss connectors. You can actually see the loss of the bright red light even through many yellow or orange simplex cable jackets except black or gray jackets. You can also use this gadget to optimize mechanical splices or prepolished-splice type fiber optic connectors. In fact- don't even think of doing one of those connectors without one no other method will assure you of high yield with them.

Visual Connector Inspection

Fiber optic microscopes are used to inspect connectors to check the quality of the termination procedure and diagnose problems. A well made connector will have a smooth , polished, scratch free finish and the fiber will not show any signs of cracks, chips or areas where the fiber is either protruding from the end of the ferrule or pulling back into it.

IPR2023-01363
Amphenol EX1031 Page 125

The magnification for viewing connectors can be 30 to 400 power but it is best to use a medium magnification. The best microscopes allow you to inspect the connector from several angles, either by tilting the connector or having angle illumination to get the best picture of what's going on. Check to make sure the microscope has an easy-to-use adapter to attach the connectors of interest to the microscope.

And remember to check that no power is present in the cable before you look at it in a microscope protect your eyes!

Optical Power - Power or Loss? ("Absolute" vs. "Relative")

Practically every measurement in fiber optics refers to optical power. The power output of a transmitter or the input to receiver are "absolute" optical power measurements, that is, you measure the actual value of the power. Loss is a "relative" power measurement, the difference between the power coupled into a component like a cable or a connector and the power that is transmitted through it. This difference is what we call optical loss and defines the performance of a cable, connector, splice, etc.

Measuring power

Power in a fiber optic system is like voltage in an electrical circuit - it's what makes things happen! It's important to have enough power, but not too much. Too little power and the receiver may not be able to distinguish the signal from noise; too much power overloads the receiver and causes errors too.

Measuring power requires only a power meter (most come with a screw-on adapter that matches the connector being tested) and a little help from the network electronics to turn on the transmitter. Remember when you measure power, the meter must be set to the proper range (usually dBm, sometimes microwatts, but never "dB" that's a relative power range used only for testing loss!) and the proper wavelengths matching the source being used. Refer to the instructions that come with the test equipment for setup and measurement instructions (and don't wait until you get to the job site to try the equipment)!

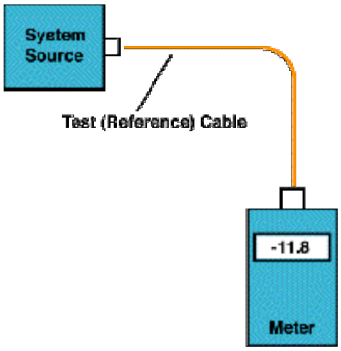

To measure power, attach the meter to the cable that has the output you want to measure. That can be at the receiver to measure receiver power, or to a reference test cable (tested and known to be good) that is attached to the transmitter, acting as the "source", to measure transmitter power. Turn on the transmitter/source and note the power the meter measures. Compare it to the specified power for the system and make sure it's enough power but not too much.

Testing loss

Be sure to see our "virtual hands-on" explanation of fiber optic testing.
Loss testing is the difference between the power coupled into the cable at the transmitter end and what comes out at the receiver end. Testing for loss requires measuring the optical power lost in a cable (including connectors ,splices, etc.) with a

fiber optic source and power meter by mating the cable being tested to known good reference cable.

In addition to our power meter, we will need a test source. The test source should match the type of source (LED or laser) and wavelength (850, 1300, 1550 nm). Again, read the instructions that come with the unit carefully.

We also need one or two reference cables, depending on the test we wish to perform. The accuracy of the measurement we make will depend on the quality of your reference cables. Always test your reference cables by the single ended method shown below to make sure they're good before you start testing other cables!

Next we need to set our reference power for loss our "0 dB" value. Correct setting of the launch power is critical to making good loss measurements!

Clean your connectors and set up your equipment like this:

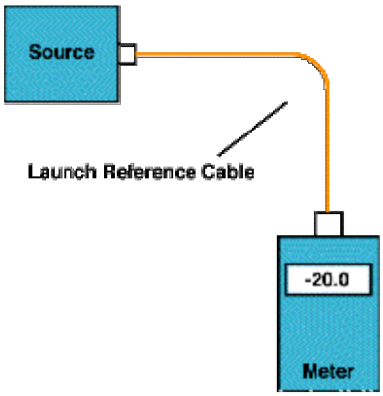

Turn on the source and select the wavelength you want for the loss test. Turn on the meter, select the "dBm" or "dB" range and select the wavelength you want for the loss test. Measure the power at the meter. This is your reference power level for all loss measurements. If your meter has a "zero" function, set this as your "0" reference.

Some reference books and manuals show setting the reference power for loss using both a launch and receive cable mated with a mating adapter. This method is acceptable for some tests, but will reduce the loss you measure by the amount of loss between your reference cables when you set your "0dB loss" reference. Also, if either the launch or receive cable is bad, setting the reference with both cables hides the fact. Then you could begin testing with bad launch cables making all your loss measurements wrong. EIA/TIA 568 calls for a single cable reference, while OFSTP-14 allows either method.

Testing Loss

There are two methods that are used to measure loss, which we call "single-ended loss" and "double-ended loss". Single-ended loss uses only the launch cable, while double-ended loss uses a receive cable attached to the meter also.

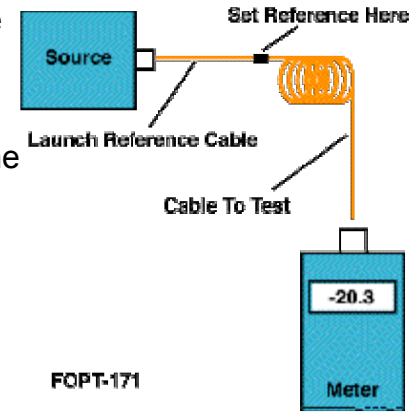

Single-ended loss is measured by mating the cable you want to test to the reference launch cable and measuring the power out the far end with the meter. When you do this you measure 1. the loss of the connector mated to the launch cable and 2. the loss of any fiber, splices or other connectors in the cable you are testing. This method is described in FOTP-171 and is shown in the drawing. Reverse the cable to test the connector on the other end.

In a double-ended loss test, you attach the cable to test between two reference cables, one attached to the source and one to the meter. This way, you measure two connectors' loses, one on each end, plus the loss of all the cable or cables in between. This is the method specified in OFSTP-14, the test for loss in an installed cable plant.

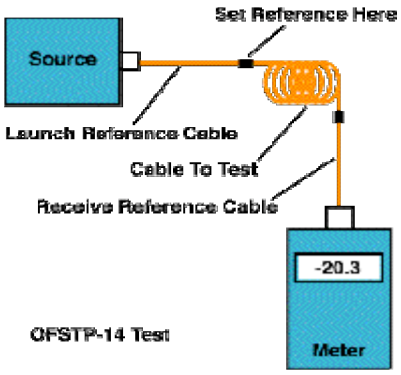

What Loss Should You Get When Testing Cables?
While it is difficult to generalize, here are some guidelines:

-For each connector, figure 0.5 dB loss (0.7 max)
-For each splice, figure 0.2 dB
-For multimode fiber, the loss is about 3 dB per km for 850 nm sources, 1 dB per km for 1300 nm. This roughly translates into a loss of 0.1 dB per 100 feet for 850 nm, 0.1 dB per 300 feet for 1300 nm.
-For singlemode fiber, the loss is about 0.5 dB per km for 1300 nm sources, 0.4 dB per km for 1550 nm. This roughly translates into a loss of 0.1 dB per 600 feet for 1300 nm, 0.1 dB per 750 feet for 1550 nm.
So for the loss of a cable plant, calculate the approximate loss as:

(0.5 dB X # connectors) + (0.2 dB x # splices) + fiber loss on the total length of cable

Troubleshooting Hints
If you have high loss in a cable, make sure to reverse it and test in the opposite direction using the single-ended method. Since the single ended test only tests the connector on one end, you can isolate a bad connector - it's the one at the launch cable end (mated to the launch cable) on the test when you measure high loss.
High loss in the double ended test should be isolated by retesting single-ended and reversing the direction of test to see if the end connector is bad. If the loss is the same, you need to either test each segment separately to isolate the bad segment or, if it is long enough, use an OTDR.
If you see no light through the cable (very high loss - only darkness when tested with your visual tracer), it's probably one of the connectors, and you have few options. The best one is to isolate the problem cable, cut the connector of one end (flip a coin to choose) and hope it was the bad one (well, you have a 50-50 chance!)

OTDR Testing
As we mentioned earlier, OTDRs are always used on OSP cables to verify the loss of each splice. But they are also used as troubleshooting tools. Let's look at how an OTDR works and see how it can help testing and troubleshooting. When you finish this section, see Understanding OTDRs on the web for a more detailed explanation.

How OTDRs Work
Unlike sources and power meters which measure the loss of the fiber optic cable plant directly, the OTDR works indirectly. The source and meter duplicate the transmitter and receiver of the fiber optic transmission link, so the measurement correlates well with

IPR2023-01363
Amphenol EX1031 Page 128

actual system loss.
The OTDR, however, uses backscattered light of the fiber to imply loss. The OTDR works like RADAR, sending a high power laser light pulse down the fiber and looking for return signals from backscattered light in the fiber itself or reflected light from connector or splice interfaces.

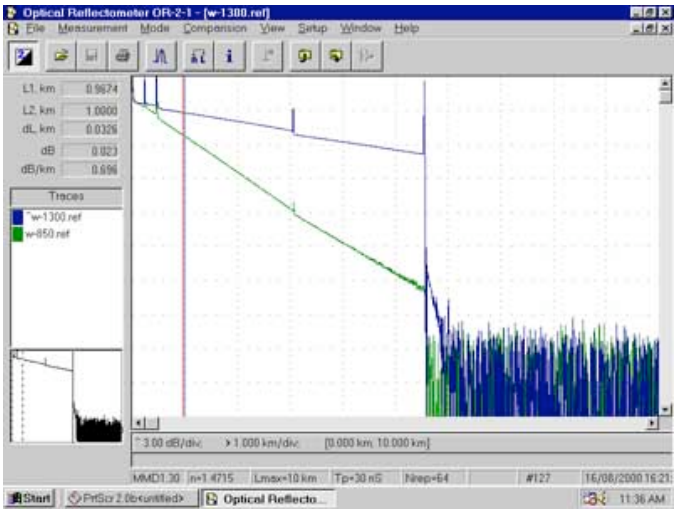

At any point in time, the light the OTDR sees is the light scattered from the pulse passing through a region of the fiber. Only a small amount of light is scattered back toward the OTDR, but with sensitive receivers and signal averaging, it is possible to make measurements over relatively long distances. Since it is possible to calibrate the speed of the pulse as it passes down the fiber, the OTDR can measure time, calculate the pulse position in the fiber and correlate what it sees in backscattered light with an actual location in the fiber. Thus it can create a display of the amount of backscattered light at any point in the fiber.
Since the pulse is attenuated in the fiber as it passes along the fiber and suffers loss in connectors and splices, the amount of power in the test pulse decreases as it passes along the fiber in the cable plant under test. Thus the portion of the light being backscattered will be reduced accordingly, producing a picture of the actual loss occurring in the fiber. Some calculations are necessary to convert this information into a display, since the process occurs twice, once going out from the OTDR and once on the return path from the scattering at the test pulse.

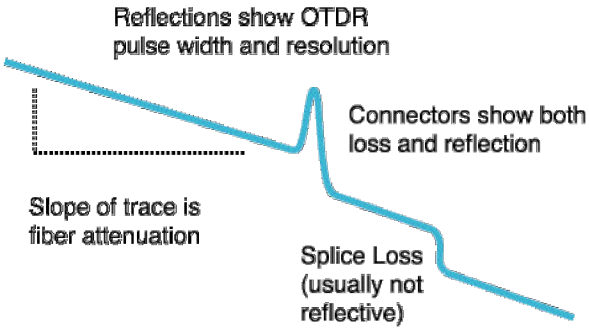

There is a lot of information in an OTDR display. The slope of the fiber trace shows the attenuation coefficient of the fiber and is calibrated in dB/km by the OTDR. In order to measure fiber attenuation, you need a fairly long length of fiber with no distortions on either end from the OTDR resolution or overloading due to large reflections. If the fiber looks nonlinear at either end, especially near a reflective event like a connector, avoid that section when measuring loss. Connectors and splices are called "events" in OTDR jargon. Both should show a loss, but connectors and mechanical splices will also show a reflective peak so you can distinguish them from fusion splices. Also, the height of that peak will indicate the amount of reflection at the event, unless it is so large that it saturates the OTDR receiver. Then peak will have a flat top and tail on the far end, indicating the receiver

was overloaded. The width of the peak shows the distance resolution of the OTDR, or how close it can detect events.

OTDRs can also detect problems in the cable caused during installation. If a fiber is broken, it will show up as the end of the fiber much shorter than the cable or a high loss splice at the wrong place. If excessive stress is placed on the cable due to kinking or too tight a bend radius, it will look like a splice at the wrong location.

OTDR Limitations
The limited distance resolution of the OTDR makes it very hard to use in a LAN or building environment where cables are usually only a few hundred meters long. The OTDR has a great deal of difficulty resolving features in the short cables of a LAN and is likely to show "ghosts" from reflections at connectors, more often than not simply confusing the user.

Using The OTDR
When using an OTDR, there are a few cautions that will make testing easier and more understandable. First always use a long launch cable, which allows the OTDR to settle down after the initial pulse and provides a reference cable for testing the first connector on the cable. Always start with the OTDR set for the shortest pulse width for best resolution and a range at least 2 times the length of the cable you are testing. Make an initial trace and see how you need to change the parameters to get better results.

The VDV Works online OTDR tutorial will teach you a lot more about OTDRs!

Restoration
The time may come when you have to troubleshoot and fix the cable plant. If you have a critical application or lots of network cable, you should be ready to do it yourself. Smaller networks can rely on a contractor. If you plan to do it yourself, you need to have equipment ready (extra cables, mechanical splices, quick termination connectors, etc., plus test equipment.) and someone who knows how to use it.
We cannot emphasize more strongly the need to have good documentation on the cable plant. If you don't know where the cables go, how long they are or what they tested for loss, you will be spinning you wheels from the get-go. And you need tools to diagnose problems and fix them, and spares including a fusion splicer or some mechanical splices and spare cables. In fact, when you install cable, save the leftovers for restoration!
And the first thing you must decide is if the problem is with the cables or the equipment using it. A simple power meter can test sources for output and receivers for input and a visual tracer will check for fiber continuity. If the problem is in the cable plant, the OTDR is the next tool needed to locate the fault.

IPR2023-01363
Amphenol EX1031 Page 130

Getting More Training

Now that Lennie's Guide has provided you with the basics, you're probably ready to figure out where to go from here. There are many options for further training but first you need to figure out what your career choice is.

If you want to work in engineering for a component manufacturer, you will need to learn the theory behind the technology, so you will probably need to start with university level classes in physics and add classes in electronics, optics and fiber optics. If you want to design networks, you probably need a university education in electronics and communications system design.

If you just want to understand the technology so you can design, install and maintain cable plants and networks for LANS, CATV systems, utilities, etc. you need to know very little about the theory itself, but lots about cables, connectors and hardware and how cable plants are designed, installed and tested. Your training should focus on practical knowledge and lots of hands-on exercises. Work toward getting your Certified Fiber Optic Technican certification from The FOA.

Whatever your interest, make sure the courses you take are appropriate for your interests or you'll be wasting time and money. Here are some options to consider:

Jim Hayes of VDV Works teaches a seminar at NECA's VDV Expo

Seminars - can run from one day to two weeks and cost nothing to several thousand dollars. Make sure any seminar you attend is focused on what aspect of fiber optics you want to learn and has lots of hands-on exercises. Also remember that company-sponsored seminars can be narrowly focussed on their products only. If you plan on using this equipment it can be a real deal!

Continuing Education - Technical schools are now offering cable installation courses, usually one or two nights a week for ten to twelve sessions. The big advantage of these courses is the extra time involved, usually more than twice as much as would be available in a seminar. As a result, you get more time to ask questions, practice hands-

IPR2023-01363
Amphenol EX1031 Page 131

on lessons seminars. And if classes are in the evening, you do not have to take days off work for class.

Self Study Programs - Some of us just learn better on our own. A well organized self-study program will help us learn new technologies like cable installation easily and quickly. A self-study program needs to have explanatory text, assignments and probably hands-on exercises to get the basic concepts across, and then recommendations for additional practicing to gain skills.

Jim Hayes of VDV Works is the author of two of the most widely used books about fiber optics and cabling, *The Fiber Optic Technicians Manual* and *Data, Voice And Video Cabling*. They are good reading for those interested in fiber optics and the Technicians Manual is the text used for the FOA CFOT exam.

Good videos can help too, especially with hands-on topics like cable pulling and termination. Some videos are more entertainment than teaching, and they are sometimes out of date, but they can be helpful nonetheless.

Don't overlook online resources either. Lots of websites are like Lennie's Guide - chock-full of good technical information for free!

What Makes a Good Cable Installation Seminar or Course ?

We've had lots of experience in running seminars, beginning in 1982 with one-day introductory seminars, and more recently, running big training conferences for tradeshows and major government and corporate clients. Our goal has always been to provide training that can help next week on the job.

Classroom courses should give you a good back-ground on all the basics of cabling and all the components that make up a cabling network. Any premises cabling course should include a session on structured cabling standards as it applies to both fiber and copper cabling. Then in hands-on workshops, you should actually prepare cables, pull, terminate and test them. A good course offers lots of hands-on time so you really learn how to handle cabling components.

How can you find a good course to take?
First, try to find out if any local schools are offering continuing education programs on cable installation. The cabling and contractor magazines all have calendars of training in every issue. That will tell you a lot about course offerings and schedules. Call some schools and ask for a brochure on their program and a current schedule. Also see our

IPR2023-01363
Amphenol EX1031 Page 132

VDV Works website to see where our programs are being given or for recommendations on other programs. Also, get recommendations from students that have taken courses or talk to instructors in related fields. Training can be a big investment, so be thorough!

How can you get certification ?

Who certifies cabling technicians? Well, it seems every trainer, manufacturer and vendor offers a "certificate" to everybody who completes their class. None of them, of course, recognize the other's certificate and neither do most of your customers! Fortunately, there is a professional society for fiber optics, The Fiber Optic Association, that offers certification to those who pass a qualifying test and can show related work experience. The FOA also approves training schools that meet their academic criteria. To be recognized as a professional in fiber optics, becoming a member of the FOA and passing certification exam, see the FOA website: www.thefoa.org. For structured cabling, the SCA, www.scausa.org, is the place to go.

IPR2023-01363
Amphenol EX1031 Page 133

Glossary

Here's an alphabetical glossary of fiber optic terms.

A
Absorption: That portion of fiber optic attenuation resulting of conversion of optical power to heat.
Analog: Signals that are continually changing, as opposed to being digitally encoded.
Attenuation Coefficient: Characteristic of the attenuation of an optical fiber per unit length, in dB/km.
Attenuation: The reduction in optical power as it passes along a fiber, usually expressed in decibels (dB). See optical loss.
Attenuator: A device that reduces signal power in a fiber optic link by inducing loss.
Average power: The average over time of a modulated signal.

B
Back reflection, optical return loss: Light reflected from the cleaved or polished end of a fiber caused by the difference of refractive indices of air and glass. Typically 4% of the incident light. Expressed in dB relative to incident power.
Backscattering: The scattering of light in a fiber back toward the source, used to make OTDR measurements. Bandwidth: The range of signal frequencies or bit rate within which a fiber optic component, link or network will operate.
Bending loss, microbending loss: Loss in fiber caused by stress on the fiber bent around a restrictive radius. Bit-error rate (BER): The fraction of data bits transmitted that are received in error.
Bit: An electrical or optical pulse that carries information.
Buffer: A protective coating applied directly on the fiber.

C
Cable: One or more fibers enclosed in protective coverings and strength members.
Cable Plant, Fiber Optic: The combination of fiber optic cable sections, connectors and splices forming the optical path between two terminal devices.
CATV: An abbreviation for Community Antenna Television or cable TV.
Chromatic dispersion: The temporal spreading of a pulse in an optical waveguide caused by the wavelength dependence of the velocities of light.
Cladding: The lower refractive index optical coating over the core of the fiber that "traps" light into the core. Connector: A device that provides for a demountable connection between two fibers or a fiber and an active device and provides protection for the fiber.
Core: The center of the optical fiber through which light is transmitted.
Coupler: An optical device that splits or combines light from more than one fiber.
Cutback method: A technique for measuring the loss of bare fiber by measuring the optical power transmitted through a long length then cutting back to the source and measuring the initial coupled power.
Cutoff wavelength: The wavelength beyond which singlemode fiber only supports one mode of propagation.

D

dBm: Optical power referenced to 1 milliwatt.
Decibel (dB): A unit of measurement of optical power which indicates relative power on a logarithmic scale, sometimes called dBr. dB=10 log (power ratio)
Detector: A photodiode that converts optical signals to electrical signals.
Digital: Signals encoded into discrete bits.
Dispersion: The temporal spreading of a pulse in an optical waveguide. May be caused by modal or chromatic effects.

E

EDFA: Erbium-doped fiber amplifier, an all optical amplifier for 1550 nm SM transmissionsystems.
Edge-emitting diode (E-LED): A LED that emits from the edge of the semiconductor chip, producing higher power and narrower spectral width.
End finish: The quality of the end surface of a fiber prepared for splicing or terminated in a connector.
Equilibrium modal distribution (EMD): Steady state modal distribution in multimode fiber, achieved some distance from the source, where the relative power in the modes becomes stable with increasing distance.
ESCON: IBM standard for connecting peripherals to a computer over fiber optics. Acronym for Enterprise System Connection.
Excess loss: The amount of light lost in a coupler, beyond that inherent in the splitting to multiple output fibers.

F

Fiber Amplifier: an all optical amplifier using erbium or other doped fibers and pump lasers to increase signal output power without electronic conversion.
Fiber Distributed Data Interface, FDDI: 100 Mb/s ring architecture data network.
Ferrule: A precision tube which holds a fiber for alignment for interconnection or termination. A ferrule may be part of a connector or mechanical splice.
Fiber tracer: An instrument that couples visible light into the fiber to allow visual checking of continuity and tracing for correct connections.
Fiber identifier: A device that clamps onto a fiber and couples light from the fiber by bending, to identify the fiber and detect high speed traffic of an operating link or a 2 kHz tone injected by a test source.
Fiber optics: Light transmission through flexible transmissive fibers for communications or lighting.
FO: Common abbreviation for "fiber optic."
Fresnel reflection, back reflection, optical return loss: Light reflected from the cleaved or polished end of a fiber caused by the difference of refractive indices of air and glass. Typically 4% of the incident light.
Fusion splicer: An instrument that splices fibers by fusing or welding them, typically by electrical arc.

G

Graded index (GI): A type of multimode fiber which used a graded profile of refractive index in the core material to correct for dispersion.

I

Index of refraction: A measure of the speed of light in a material.
Index matching fluid: A liquid used of refractive index similar to glass used to match the materials at the ends of two fibers to reduce loss and back reflection.
Index profile: The refractive index of a fiber as a function of cross section.
Insertion loss: The loss caused by the insertion of a component such as a splice or connector in an optical fiber.

J

Jacket: The protective outer coating of the cable.
Jumper cable: A short single fiber cable with connectors on both ends used for interconnecting other cables or testing.

L

Laser diode, ILD: A semiconductor device that emits high powered, coherent light when stimulated by an electrical current. Used in transmitters for singlemode fiber links.
Launch cable: A known good fiber optic jumper cable attached to a source and calibrated for output power used used as a reference cable for loss testing. This cable must be made of fiber and connectors of a matching type to the cables to be tested.
Light-emitting diode, LED: A semiconductor device that emits light when stimulated by an electrical current. Used in transmitters for multimode fiber links.
Link, fiber optic: A combination of transmitter, receiver and fiber optic cable connecting them capable of transmitting data. May be analog or digital.
Long wavelength: A commonly used term for light in the 1300 and 1550 nm ranges.
Loss,optical: The amount of optical power lost as light is transmitted through fiber, splices, couplers, etc.
Loss budget: The amount of power lost in the link. Often used in terms of the maximum amount of loss that can be tolerated by a given link.

M

Margin: The additional amount of loss that can be tolerated in a link.
Mechanical splice: A semi-permanent connection between two fibers made with an alignment device and index matching fluid or adhesive.
Micron (*m): A unit of measure, 10-6 m, used to measure wavelength of light.
Microscope, fiber optic inspection: A microscope used to inspect the end surface of a connector for flaws or contamination or a fiber for cleave quality.
Modal dispersion: The temporal spreading of a pulse in an optical waveguide caused by modal effects.
Mode field diameter: A measure of the core size in singlemode fiber.
Mode filter: A device that removes optical power in higher order modes in fiber.
Mode scrambler: A device that mixes optical power in fiber to achieve equal power distribution in all modes. Mode stripper: A device that removes light in the cladding of an

optical fiber.
Mode: A single electromagnetic field pattern that travels in fiber.
Multimode fiber: A fiber with core diameter much larger than the wavelength of light transmitted that allows many modes of light to propagate. Commonly used with LED sources for lower speed, short distance links.

N
Nanometer (nm): A unit of measure , 10-9 m, used to measure the wavelength of light.
Network: A system of cables, hardware and equipment used for communications.
Numerical aperture (NA): A measure of the light acceptance angle of the fiber.

O
Optical amplifier: A device that amplifies light without converting it to an electrical signal.
Optical fiber: An optical waveguide, comprised of a light carrying core and cladding which traps light in the core.
Optical loss test set (OLTS): An measurement instrument for optical loss that includes both a meter and source.
Optical power: The amount of radiant energy per unit time, expressed in linear units of Watts or on a logarithmic scale, in dBm (where 0 dB = 1 mW) or dB* (where 0 dB*=1 microWatt).
Optical return loss, back reflection: Light reflected from the cleaved or polished end of a fiber caused by the difference of refractive indices of air and glass. Typically 4% of the incident light. Expressed in dB relative to incident power.
Optical switch: A device that routes an optical signal from one or more input ports to one or more output ports.
Optical time domain reflectometer (OTDR): An instruments that used backscattered light to find faults in optical fiber and infer loss.
Overfilled launch: A condition for launching light into the fiber where the incoming light has a spot size and NA larger than accepted by the fiber, filling all modes in the fiber.

P
Photodiode: A semiconductor that converts light to an electrical signal, used in fiber optic receivers.
Pigtail: A short length of fiber attached to a fiber optic component such as a laser or coupler.
Plastic optical fiber (POF): An optical fiber made of plastic.
Plastic-clad silica (PCS) fiber: A fiber made with a glass core and plastic cladding.
Power budget: The difference (in dB) between the transmitted optical power (in dBm) and the receiver sensitivity (in dBm).
Power meter, fiber optic: An instrument that measures optical power emanating form the end of a fiber.
Preform: The large diameter glass rod from which fiber is drawn.

R
Receive cable: A known good fiber optic jumper cable attached to a power meter used as a reference cable for loss testing. This cable must be made of fiber and connectors

of a matching type to the cables to be tested.
Receiver: A device containing a photodiode and signal conditioning circuitry that converts light to an electrical signal in fiber optic links.
Refractive index: A property of optical materials that relates to the velocity of light in the material.
Repeater, regenerator: A device that receives a fiber optic signal and regenerates it for retransmission, used in very long fiber optic links.

S
Scattering: The change of direction of light after striking small particles that causes loss in optical fibers.
Short wavelength: A commonly used term for light in the 665, 790, and 850 nm ranges.
Singlemode fiber: A fiber with a small core, only a few times the wavelength of light transmitted, that only allows one mode of light to propagate. Commonly used with laser sources for high speed, long distance links.
Source: A laser diode or LED used to inject an optical signal into fiber.
Splice (fusion or mechanical): A device that provides for a connection between two fibers, typically intended to be permanent.
Splitting ratio: The distribution of power among the output fibers of a coupler.
Steady state modal distribution: Equilibrium modal distribution (EMD) in multimode fiber, achieved some distance from the source, where the relative power in the modes becomes stable with increasing distance.
Step index fiber: A multimode fiber where the core is all the same index of refraction.
Surface emitter LED: A LED that emits light perpendicular to the semiconductor chip. Most LEDs used in datacommunications are surface emitters.

T
Talkset, fiber optic: A communication device that allows conversation over unused fibers.
Termination: Preparation of the end of a fiber to allow connection to another fiber or an active device, sometimes also called "connectorization".
Test cable: A short single fiber jumper cable with connectors on both ends used for testing. This cable must be made of fiber and connectors of a matching type to the cables to be tested.
Test kit: A kit of fiber optic instruments, typically including a power meter, source and test accessories used for measuring loss and power.
Test source: A laser diode or LED used to inject an optical signal into fiber for testing loss of the fiber or other components.
Total internal reflection: Confinement of light into the core of a fiber by the reflection off the core-cladding boundary.
Transmitter: A device which includes a LED or laser source and signal conditioning electronics that is used to inject a signal into fiber.

V
VCSEL: vertical cavity surface emitting laser, a type of laser that emits light vertically out of the chip, not out the edge.

IPR2023-01363
Amphenol EX1031 Page 138

Visual fault locator: A device that couples visible light into the fiber to allow visual tracing and testing of continuity. Some are bright enough to allow finding breaks in fiber through the cable jacket.

W

Watts: A linear measure of optical power, usually expressed in milliwatts (mW), microwatts (*W) or nanowatts (nW).
Wavelength: A measure of the color of light, usually expressed in nanometers (nm) or microns (*m).
Wavelength division multiplexing (WDM): A technique of sending signals of several different wavelengths of light into the fiber simultaneously.
Working margin: The difference (in dB) between the power budget and the loss budget (i.e. the excess power margin).

IPR2023-01363
Amphenol EX1031 Page 139