US009408220B2

(12) **United States Patent**
Gore et al.

(10) **Patent No.: US 9,408,220 B2**
(45) **Date of Patent: Aug. 2, 2016**

(54) **CHANNEL QUALITY REPORTING FOR ADAPTIVE SECTORIZATION**

(75) Inventors: **Dhananjay Ashok Gore**, San Diego, CA (US); **Alexei Gorokhov**, San Diego, CA (US); **Tingfang Ji**, San Diego, CA (US); **Aamod Khandekar**, San Diego, CA (US); **Tamer Kadous**, San Diego, CA (US)

(73) Assignee: **QUALCOMM Incorporated**, San Diego, CA (US)

(*) Notice: Subject to any disclaimer, the term of this patent is extended or adjusted under 35 U.S.C. 154(b) by 278 days.

(21) Appl. No.: **11/261,822**

(22) Filed: **Oct. 27, 2005**

(65) **Prior Publication Data**

US 2006/0233131 A1 Oct. 19, 2006

Related U.S. Application Data

(60) Provisional application No. 60/672,575, filed on Apr. 19, 2005, provisional application No. 60/710,419, filed on Aug. 22, 2005.

(51) **Int. Cl.**
H04Q 7/00 (2006.01)
H04W 72/08 (2009.01)
(Continued)

(52) **U.S. Cl.**
CPC ***H04W 72/08*** (2013.01); ***H04B 1/7143*** (2013.01); ***H04B 7/043*** (2013.01); ***H04B 7/0689*** (2013.01); ***H04L 1/0026*** (2013.01); ***H04L 1/0027*** (2013.01); ***H04L 1/20*** (2013.01); ***H04L 5/006*** (2013.01); ***H04L 5/0037*** (2013.01);
(Continued)

(58) **Field of Classification Search**
CPC ... H04L 1/0071; H04L 1/1864; H04L 5/0053; H04B 7/2606; H04B 74/006; H04B 72/044
USPC 375/295, 340; 455/522, 9, 452.1, 422.1; 370/328, 252, 329, 312
See application file for complete search history.

(56) **References Cited**

U.S. PATENT DOCUMENTS

4,393,276 A 7/1983 Steele
4,554,668 A 11/1985 Deman et al.
(Continued)

FOREIGN PATENT DOCUMENTS

AU 2005319084 4/2010
CA 2348137 11/2001
(Continued)

OTHER PUBLICATIONS

Dinis, et al., "A Multiple Access Scheme for the Uplink of Broadband Wireless Systems," IEEE Global Telecommunications Conference, 2004, Globecom '04, vol. 6, Nov. 29-Dec. 3, 2004, pp. 3808-3812.
(Continued)

Primary Examiner — Phuoc H Doan

(57) **ABSTRACT**

Apparatuses and methodologies are described that enhance performance in a wireless communication system using beamforming transmissions. According to one aspect, the channel quality is monitored. Channel quality indicators can be used to select a scheduling technique, such as space division multiplexing (SDM), multiple-input multiple output (MIMO) transmission and opportunistic beamforming for one or more user devices. In addition, the CQI can be used to determine the appropriate beam assignment or to update the beam pattern.

36 Claims, 9 Drawing Sheets

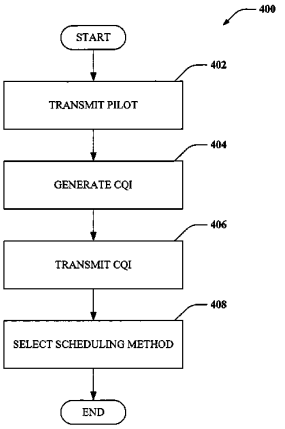

(51) **Int. Cl.**

H04B 1/7143	(2011.01)
H04B 7/04	(2006.01)
H04L 1/20	(2006.01)
H04L 1/00	(2006.01)
H04B 7/06	(2006.01)
H04L 5/00	(2006.01)

(52) **U.S. Cl.**

CPC *H04B 7/065* (2013.01); *H04B 7/0632* (2013.01); *H04B 7/0697* (2013.01); *H04L 5/0023* (2013.01); *H04L 5/0051* (2013.01); *H04L 5/0057* (2013.01)

(56) **References Cited**

U.S. PATENT DOCUMENTS

4,747,137	A	5/1988	Matsunaga
4,783,779	A	11/1988	Takahata et al.
4,783,780	A	11/1988	Alexis
4,975,952	A	12/1990	Mabey et al.
5,008,900	A	4/1991	Critchlow et al.
5,115,248	A	5/1992	Roederer et al.
5,268,694	A	12/1993	Jan et al.
5,282,222	A	1/1994	Fattouche et al.
5,363,408	A	11/1994	Paik et al.
5,371,761	A	12/1994	Daffara et al.
5,384,810	A	1/1995	Amrany
5,406,551	A	4/1995	Saito et al.
5,410,538	A	4/1995	Roche et al.
5,455,839	A	10/1995	Eyubogiu
5,465,253	A	11/1995	Rahnema
5,491,727	A	2/1996	Petit
5,513,379	A	4/1996	Benveniste et al.
5,539,748	A	7/1996	Raith et al.
5,548,582	A	8/1996	Brajal et al.
5,553,069	A	9/1996	Ueno et al.
5,583,869	A	12/1996	Grube et al.
5,594,738	A	1/1997	Crisler et al.
5,604,744	A	2/1997	Andersson et al.
5,612,978	A	3/1997	Blanchard et al.
5,625,876	A	4/1997	Gilhousenn et al.
5,684,491	A	11/1997	Newman et al.
5,726,978	A	3/1998	Frodigh et al.
5,732,113	A	3/1998	Schmidl et al.
5,745,487	A	4/1998	Hamaki
5,768,276	A	6/1998	Diachina et al.
5,790,537	A	8/1998	Yoon et al.
5,812,938	A	9/1998	Gilhousen et al.
5,815,488	A	9/1998	Williams et al.
5,822,368	A	10/1998	Wang
5,828,650	A	10/1998	Malkamaki et al.
5,838,268	A	11/1998	Frenkel
5,867,478	A	2/1999	Baum et al.
5,870,393	A	2/1999	Yano et al.
5,887,023	A	3/1999	Mabuchi
5,907,585	A	5/1999	Suzuki et al.
5,920,571	A	7/1999	Houck et al.
5,926,470	A	7/1999	Tiedemann, Jr. et al.
5,933,421	A	8/1999	Alamouti et al.
5,949,814	A	9/1999	Odenwalder et al.
5,953,325	A	9/1999	Willars
5,955,992	A	9/1999	Shattil
5,956,642	A	9/1999	Larsson et al.
5,995,992	A	11/1999	Eckard
5,999,826	A	12/1999	Whinnett
6,002,942	A	12/1999	Park et al.
6,016,123	A	1/2000	Barton et al.
6,038,263	A	3/2000	Kotzin et al.
6,038,450	A	3/2000	Brink et al.
6,052,364	A	4/2000	Chalmers et al.
6,061,337	A	5/2000	Light et al.
6,067,315	A	5/2000	Sandin
6,075,350	A	6/2000	Peng et al.
6,075,797	A	6/2000	Thomas
6,076,114	A	6/2000	Wesley et al.
6,088,345	A	7/2000	Sakoda et al.
6,088,592	A	7/2000	Doner et al.
6,108,323	A	8/2000	Gray et al.
6,108,550	A	8/2000	Wiorek et al.
6,112,094	A	8/2000	Dent
6,128,776	A	10/2000	Kang
6,138,037	A	10/2000	Jaamies
6,141,317	A	10/2000	Marchok et al.
6,154,484	A	11/2000	Lee et al.
6,169,910	B1	1/2001	Tamil et al.
6,172,993	B1	1/2001	Kim et al.
6,175,550	B1	1/2001	van Nee
6,175,650	B1	1/2001	Sindhu et al.
6,176,550	B1	1/2001	Lamart et al.
6,198,775	B1	3/2001	Khayrallah et al.
6,215,983	B1	4/2001	Dogan et al.
6,226,280	B1	5/2001	Roark et al.
6,232,918	B1	5/2001	Wax et al.
6,240,129	B1	5/2001	Reusens et al.
6,249,683	B1	6/2001	Lundby et al.
6,256,478	B1	7/2001	Allen et al.
6,271,946	B1	8/2001	Chang et al.
6,272,122	B1	8/2001	Wee et al.
6,310,704	B1	10/2001	Dogan et al.
6,317,435	B1	11/2001	Tiedemann, Jr. et al.
6,335,922	B1	1/2002	Tiedemann, Jr. et al.
6,337,659	B1	1/2002	Kim et al.
6,337,983	B1	1/2002	Bonta et al.
6,353,637	B1	3/2002	Mansour et al.
6,363,060	B1	3/2002	Sarkar
6,374,115	B1	4/2002	Barnes et al.
6,377,539	B1	4/2002	Kang et al.
6,377,809	B1	4/2002	Rezaiifar et al.
6,388,998	B1	5/2002	Kasturia
6,393,008	B1	5/2002	Cheng et al.
6,393,012	B1	5/2002	Pankaj
6,401,062	B1	6/2002	Murashima
6,438,369	B1	8/2002	Huang et al.
6,449,246	B1	9/2002	Barton et al.
6,466,800	B1	10/2002	Sydon et al.
6,473,467	B1	10/2002	Wallace et al.
6,477,317	B1	11/2002	Itokawa
6,478,422	B1	11/2002	Hansen
6,483,820	B1	11/2002	Davidson et al.
6,487,243	B1	11/2002	Hwang et al.
6,496,790	B1	12/2002	Kathavate et al.
6,501,810	B1	12/2002	Karim et al.
6,507,601	B2	1/2003	Parsa et al.
6,519,462	B1	2/2003	Lu et al.
6,529,525	B1	3/2003	Pecen et al.
6,535,666	B1	3/2003	Dogan et al.
6,539,008	B1	3/2003	Ahn et al.
6,539,213	B1	3/2003	Richards et al.
6,542,485	B1	4/2003	Mujtaba
6,542,743	B1	4/2003	Soliman
6,563,806	B1	5/2003	Yano et al.
6,563,881	B1	5/2003	Sakoda et al.
6,577,739	B1	6/2003	Hurtig et al.
6,584,140	B1	6/2003	Lee
6,590,881	B1	7/2003	Wallace et al.
6,597,746	B1	7/2003	Amrany et al.
6,601,206	B1	7/2003	Marvasti
6,614,857	B1	9/2003	Buehrer et al.
6,625,172	B2	9/2003	Odenwalder et al.
6,636,568	B2	10/2003	Kadous
6,654,339	B1	11/2003	Bohnke et al.
6,654,431	B1	11/2003	Barton et al.
6,657,949	B1	12/2003	Jones, IV et al.
6,658,258	B1	12/2003	Chen et al.
6,674,787	B1	1/2004	Dick et al.
6,674,810	B1	1/2004	Cheng
6,675,012	B2	1/2004	Gray et al.
6,678,318	B1	1/2004	Lai
6,690,951	B1	2/2004	Cuffaro et al.
6,693,952	B1	2/2004	Chuah et al.
6,701,165	B1	3/2004	Ho et al.
6,704,571	B1	3/2004	Moon
6,711,400	B1	3/2004	Aura et al.
6,717,908	B2	4/2004	Vijayan et al.

(56) **References Cited**

U.S. PATENT DOCUMENTS

6,721,568 B1 4/2004 Gustavsson et al.
6,724,719 B1 4/2004 Tong et al.
6,731,602 B1 5/2004 Watanabe et al.
6,735,244 B1 5/2004 Hasegawa et al.
6,744,743 B2 6/2004 Walton et al.
6,748,220 B1 6/2004 Chow et al.
6,751,444 B1 6/2004 Meiyappan
6,751,456 B2 6/2004 Bilgic et al.
6,754,511 B1 6/2004 Halford et al.
6,763,009 B1 7/2004 Bedekar et al.
6,765,969 B1 7/2004 Vook et al.
6,776,165 B2 8/2004 Jin et al.
6,776,765 B2 8/2004 Soukup et al.
6,778,513 B2 8/2004 Kasapi et al.
6,785,341 B2 8/2004 Walton et al.
6,798,736 B1 9/2004 Black et al.
6,799,043 B2 9/2004 Tiedemann, Jr. et al.
6,802,035 B2 10/2004 Catreux et al.
6,804,307 B1 10/2004 Popovic
6,813,284 B2 11/2004 Vayanos et al.
6,821,535 B2 11/2004 Nurmi et al.
6,828,293 B1 12/2004 Hazenkamp et al.
6,829,293 B2 12/2004 Jones et al.
6,831,943 B1 12/2004 Dabak et al.
6,842,487 B1 1/2005 Larsson
6,850,481 B2 2/2005 Wu et al.
6,850,509 B2 2/2005 Lee et al.
6,862,271 B2 3/2005 Medvedev et al.
6,870,808 B1 3/2005 Liu
6,870,826 B1 3/2005 Ishizu
6,904,097 B2 6/2005 Agami et al.
6,904,283 B2 6/2005 Li et al.
6,904,550 B2 6/2005 Sibecas et al.
6,907,020 B2 6/2005 Periyalwar et al.
6,907,269 B2 6/2005 Yamaguchi et al.
6,909,707 B2 6/2005 Rotstein et al.
6,909,797 B2 6/2005 Romsdahl et al.
6,917,602 B2 7/2005 Toskala et al.
6,917,821 B2 7/2005 Kadous et al.
6,927,728 B2 8/2005 Vook et al.
6,928,047 B1 8/2005 Xia
6,934,266 B2 8/2005 Dulin et al.
6,934,275 B1 8/2005 Love et al.
6,934,340 B1 8/2005 Dollard et al.
6,940,827 B2 9/2005 Li et al.
6,940,842 B2 9/2005 Proctor, Jr.
6,940,845 B2 9/2005 Benveniste et al.
6,954,448 B2 10/2005 Farley et al.
6,954,481 B1 10/2005 Laroia et al.
6,954,622 B2 10/2005 Nelson et al.
6,961,364 B1 11/2005 Laroia et al.
6,963,543 B2 11/2005 Diep et al.
6,970,682 B2 11/2005 Crilly, Jr. et al.
6,975,868 B2 12/2005 Joshi et al.
6,980,540 B1 12/2005 Laroia et al.
6,985,434 B2 1/2006 Wu et al.
6,985,453 B2 1/2006 Lundby et al.
6,985,466 B1 1/2006 Yun et al.
6,985,498 B2 1/2006 Laroia et al.
6,987,746 B1 1/2006 Song
6,993,342 B2 1/2006 Kuchibhotla et al.
7,002,900 B2 2/2006 Walton et al.
7,006,529 B2 2/2006 Alastalo et al.
7,006,557 B2 2/2006 Subrahmanya et al.
7,006,848 B2 2/2006 Ling et al.
7,009,500 B2 3/2006 Rao et al.
7,010,048 B1 3/2006 Shattil
7,013,143 B2 3/2006 Love et al.
7,016,318 B2 3/2006 Pankaj et al.
7,016,319 B2 3/2006 Baum et al.
7,016,425 B1 3/2006 Kraiem
7,020,110 B2 3/2006 Walton et al.
7,039,356 B2 5/2006 Nguyen et al.
7,039,370 B2 5/2006 Laroia et al.
7,042,856 B2 5/2006 Walton et al.
7,042,857 B2 5/2006 Krishnan et al.
7,047,006 B2 5/2006 Classon et al.
7,050,402 B2 5/2006 Schmidl et al.
7,050,405 B2 5/2006 Attar et al.
7,050,759 B2 5/2006 Gaal et al.
7,054,301 B1 5/2006 Sousa et al.
7,061,898 B2 6/2006 Hashmen et al.
7,069,009 B2 6/2006 Li et al.
7,072,315 B1 7/2006 Liu et al.
7,079,867 B2 7/2006 Chun et al.
7,085,574 B2 8/2006 Gaal et al.
7,095,708 B1 8/2006 Alamouti et al.
7,095,709 B2 8/2006 Walton et al.
7,099,299 B2 8/2006 Liang et al.
7,099,630 B2 8/2006 Brunner et al.
7,103,384 B2 9/2006 Chun
7,106,319 B2 9/2006 Ishiyama
7,113,808 B2 9/2006 Hwang et al.
7,120,134 B2 10/2006 Tiedemann, Jr. et al.
7,120,395 B2 10/2006 Tong et al.
7,126,928 B2 10/2006 Tiedemann, Jr. et al.
7,133,460 B2 11/2006 Bae et al.
7,139,328 B2 11/2006 Thomas et al.
7,142,864 B2 11/2006 Laroia et al.
7,145,940 B2 12/2006 Gore et al.
7,145,959 B2 12/2006 Harel et al.
7,149,199 B2 12/2006 Sung et al.
7,149,238 B2 12/2006 Agee et al.
7,151,761 B1 12/2006 Palenius et al.
7,151,936 B2 12/2006 Wager et al.
7,154,936 B2 12/2006 Bjerke et al.
7,155,236 B2 12/2006 Chen et al.
7,157,351 B2 1/2007 Cheng et al.
7,161,971 B2 1/2007 Tiedemann, Jr. et al.
7,164,649 B2 1/2007 Walton et al.
7,164,696 B2 1/2007 Sano et al.
7,167,916 B2 1/2007 Willen et al.
7,170,937 B2 1/2007 Zhou
7,177,297 B2 2/2007 Agrawal et al.
7,177,351 B2 2/2007 Kadous
7,180,627 B2 2/2007 Moylan et al.
7,181,170 B2 2/2007 Love et al.
7,184,426 B2 2/2007 Padovani et al.
7,184,713 B2 2/2007 Kadous et al.
7,188,300 B2 3/2007 Eriksson et al.
7,197,282 B2 3/2007 Dent et al.
7,200,177 B2 4/2007 Miyoshi
7,209,712 B2 4/2007 Holtzman et al.
7,215,979 B2 5/2007 Nakagawa et al.
7,230,942 B2 6/2007 Laroia et al.
7,233,634 B1 6/2007 Hassell Sweatman et al.
7,236,747 B1 6/2007 Meacham et al.
7,242,722 B2 7/2007 Krauss et al.
7,243,150 B2 7/2007 Sher et al.
7,248,559 B2 7/2007 Ma et al.
7,248,841 B2 7/2007 Agee et al.
7,254,158 B2 8/2007 Agrawal et al.
7,257,167 B2 8/2007 Lau et al.
7,257,406 B2 8/2007 Ji et al.
7,257,423 B2 8/2007 Iochi
7,260,153 B2 8/2007 Nissani et al.
7,280,467 B2 10/2007 Smee et al.
7,289,570 B2 10/2007 Schmidl et al.
7,289,585 B2 10/2007 Sandhu et al.
7,290,195 B2 10/2007 Guo et al.
7,292,651 B2 11/2007 Li
7,292,863 B2 11/2007 Chen et al.
7,295,509 B2 11/2007 Laroia et al.
7,313,086 B2 12/2007 Aizawa et al.
7,313,126 B2 12/2007 Yun et al.
7,313,174 B2 12/2007 Alard et al.
7,313,407 B2 12/2007 Shapira
7,327,812 B2 2/2008 Auer
7,330,701 B2 2/2008 Mukkavilli et al.
7,336,727 B2 2/2008 Mukkavilli et al.
7,349,371 B2 3/2008 Schein
7,349,667 B2 3/2008 Magee et al.
7,356,000 B2 4/2008 Oprescu-Surcobe et al.
7,356,005 B2 4/2008 Derryberry et al.

(56) **References Cited**

U.S. PATENT DOCUMENTS

7,356,073	B2	4/2008	Heikkila
7,359,327	B2	4/2008	Oshiba
7,363,055	B2	4/2008	Castrogiovanni et al.
7,366,223	B1	4/2008	Chen et al.
7,366,253	B2	4/2008	Kim et al.
7,366,520	B2	4/2008	Haustein et al.
7,369,531	B2	5/2008	Cho et al.
7,372,911	B1	5/2008	Lindskog et al.
7,372,912	B2	5/2008	Seo et al.
7,379,489	B2	5/2008	Zuniga et al.
7,382,764	B2	6/2008	Uehara et al.
7,392,014	B2	6/2008	Baker et al.
7,394,865	B2	7/2008	Borran et al.
7,403,745	B2	7/2008	Dominique et al.
7,403,748	B1	7/2008	Keskitalo et al.
7,406,119	B2	7/2008	Yamano et al.
7,406,336	B2	7/2008	Astely et al.
7,411,898	B2	8/2008	Erlich et al.
7,412,212	B2	8/2008	Hottinen
7,418,043	B2	8/2008	Shattil
7,418,246	B2	8/2008	Kim et al.
7,423,991	B2	9/2008	Cho et al.
7,426,426	B2	9/2008	Van Baren et al.
7,428,426	B2	9/2008	Kiran et al.
7,433,661	B2	10/2008	Kogiantis et al.
7,437,164	B2	10/2008	Agrawal et al.
7,443,835	B2	10/2008	Lakshmi Narayanan et al.
7,447,270	B1	11/2008	Hottinen et al.
7,450,532	B2	11/2008	Chae et al.
7,450,548	B2	11/2008	Haustein et al.
7,460,466	B2	12/2008	Lee et al.
7,463,698	B2	12/2008	Fujii et al.
7,468,943	B2	12/2008	Gu et al.
7,469,011	B2	12/2008	Lin et al.
7,471,963	B2	12/2008	Kim et al.
7,483,408	B2	1/2009	Bevan et al.
7,483,719	B2	1/2009	Kim et al.
7,486,408	B2	2/2009	Van Der Schaar et al.
7,486,735	B2	2/2009	Dubuc et al.
7,492,788	B2	2/2009	Zhang et al.
7,499,393	B2	3/2009	Ozluturk et al.
7,508,748	B2	3/2009	Kadous
7,508,842	B2	3/2009	Baum et al.
7,512,096	B2	3/2009	Kuzminskiy et al.
7,545,867	B1	6/2009	Lou et al.
7,548,506	B2	6/2009	Ma et al.
7,551,546	B2	6/2009	Ma et al.
7,551,564	B2	6/2009	Mattina
7,558,293	B2	7/2009	Choi et al.
7,567,621	B2	7/2009	Sampath et al.
7,573,900	B2	8/2009	Kim et al.
7,599,327	B2	10/2009	Zhuang
7,616,955	B2	11/2009	Kim et al.
7,627,051	B2	12/2009	Shen et al.
7,664,061	B2	2/2010	Hottinen
7,676,007	B1	3/2010	Choi et al.
7,684,507	B2	3/2010	Levy
7,724,777	B2	5/2010	Sutivong et al.
7,768,979	B2	8/2010	Sutivong et al.
7,899,497	B2	3/2011	Kish et al.
7,916,624	B2	3/2011	Laroia et al.
7,924,699	B2	4/2011	Laroia et al.
7,990,843	B2	8/2011	Laroia et al.
7,990,844	B2	8/2011	Laroia et al.
8,031,583	B2	10/2011	Classon et al.
8,045,512	B2	10/2011	Khandekar et al.
8,095,141	B2	1/2012	Teague
8,098,568	B2	1/2012	Laroia et al.
8,098,569	B2	1/2012	Laroia et al.
8,199,634	B2	6/2012	Laroia et al.
8,218,425	B2	7/2012	Laroia et al.
8,223,627	B2	7/2012	Laroia et al.
8,462,859	B2	6/2013	Sampath et al.
8,477,684	B2	7/2013	Khandekar et al.
8,582,509	B2	11/2013	Khandekar et al.
8,582,548	B2	11/2013	Gore et al.
2001/0021180	A1	9/2001	Lee et al.
2001/0021650	A1	9/2001	Bilgic et al.
2001/0024427	A1	9/2001	Suzuki
2001/0030948	A1	10/2001	Tiedemann, Jr.
2001/0047424	A1	11/2001	Alastalo et al.
2001/0053140	A1	12/2001	Choi et al.
2001/0055294	A1	12/2001	Motoyoshi et al.
2001/0055297	A1	12/2001	Benveniste et al.
2002/0000948	A1	1/2002	Chun et al.
2002/0015405	A1	2/2002	Sepponen et al.
2002/0018157	A1	2/2002	Zhang et al.
2002/0039912	A1	4/2002	Yamaguchi et al.
2002/0044524	A1	4/2002	Laroia et al.
2002/0058525	A1	5/2002	Kasapi et al.
2002/0061742	A1	5/2002	Lapaille et al.
2002/0077152	A1	6/2002	Johnson et al.
2002/0085521	A1	7/2002	Tripathi et al.
2002/0090004	A1	7/2002	Rinchiuso
2002/0090024	A1	7/2002	Tan et al.
2002/0101839	A1	8/2002	Farley et al.
2002/0122381	A1	9/2002	Wu et al.
2002/0122400	A1	9/2002	Vayanos et al.
2002/0122403	A1	9/2002	Hashem et al.
2002/0128035	A1	9/2002	Jokinen et al.
2002/0147953	A1	10/2002	Catreux et al.
2002/0159422	A1	10/2002	Li et al.
2002/0160769	A1	10/2002	Gray et al.
2002/0160781	A1	10/2002	Bark et al.
2002/0168946	A1	11/2002	Aizawa et al.
2002/0172293	A1	11/2002	Kuchi et al.
2002/0176398	A1	11/2002	Nidda
2002/0181571	A1	12/2002	Yamano et al.
2002/0191569	A1	12/2002	Sung et al.
2002/0193146	A1	12/2002	Wallace et al.
2003/0002464	A1	1/2003	Rezaiifar et al.
2003/0020651	A1	1/2003	Crilly, Jr. et al.
2003/0027579	A1	2/2003	Sydon
2003/0035491	A1	2/2003	Walton et al.
2003/0036359	A1	2/2003	Dent et al.
2003/0040283	A1	2/2003	Kawai et al.
2003/0043732	A1	3/2003	Walton et al.
2003/0043764	A1	3/2003	Kim et al.
2003/0063579	A1	4/2003	Lee
2003/0068983	A1	4/2003	Kim et al.
2003/0072254	A1	4/2003	Ma et al.
2003/0072255	A1	4/2003	Ma et al.
2003/0072280	A1	4/2003	McFarland et al.
2003/0072395	A1	4/2003	Jia et al.
2003/0073409	A1	4/2003	Nobukiyo et al.
2003/0073464	A1	4/2003	Giannakis et al.
2003/0076890	A1	4/2003	Hochwald et al.
2003/0086371	A1	5/2003	Walton et al.
2003/0086393	A1	5/2003	Vasudevan et al.
2003/0096579	A1	5/2003	Ito et al.
2003/0103520	A1	6/2003	Chen et al.
2003/0109226	A1	6/2003	Brunner et al.
2003/0109266	A1	6/2003	Rafiah et al.
2003/0112745	A1	6/2003	Zhuang et al.
2003/0123414	A1	7/2003	Tong et al.
2003/0125040	A1	7/2003	Walton et al.
2003/0128658	A1	7/2003	Walton et al.
2003/0133426	A1	7/2003	Schein et al.
2003/0142648	A1	7/2003	Semper
2003/0142729	A1	7/2003	Subrahmanya et al.
2003/0147371	A1	8/2003	Choi et al.
2003/0161281	A1	8/2003	Dulin et al.
2003/0161282	A1	8/2003	Medvedev et al.
2003/0165189	A1	9/2003	Kadous et al.
2003/0181163	A1	9/2003	Ofuji et al.
2003/0181170	A1	9/2003	Sim
2003/0185310	A1	10/2003	Ketchum et al.
2003/0190897	A1	10/2003	Lei et al.
2003/0193915	A1	10/2003	Lee et al.
2003/0202491	A1	10/2003	Tiedemann, Jr. et al.
2003/0202560	A1	10/2003	Tiedemann, Jr. et al.
2003/0216156	A1	11/2003	Chun et al.
2003/0228850	A1	12/2003	Hwang
2003/0235255	A1	12/2003	Ketchum et al.

(56) **References Cited**

U.S. PATENT DOCUMENTS

2004/0001429 A1 1/2004 Ma et al.
2004/0001460 A1 1/2004 Bevan et al.
2004/0002364 A1 1/2004 Trikkonen et al.
2004/0009783 A1 1/2004 Miyoshi et al.
2004/0010623 A1 1/2004 Sher et al.
2004/0015692 A1 1/2004 Green et al.
2004/0017785 A1 1/2004 Zelst
2004/0032443 A1 2/2004 Moylan et al.
2004/0042558 A1 3/2004 Hwang et al.
2004/0048609 A1 3/2004 Kosaka et al.
2004/0048630 A1 3/2004 Shapira et al.
2004/0054999 A1 3/2004 Willen et al.
2004/0057394 A1 3/2004 Holtzman et al.
2004/0058687 A1 3/2004 Kim et al.
2004/0066754 A1* 4/2004 Hottinen 370/252
2004/0066761 A1 4/2004 Giannakis et al.
2004/0066772 A1 4/2004 Moon et al.
2004/0067756 A1 4/2004 Wager et al.
2004/0072565 A1 4/2004 Nobukiyo et al.
2004/0076185 A1 4/2004 Kim et al.
2004/0077345 A1 4/2004 Turner et al.
2004/0077379 A1 4/2004 Smith et al.
2004/0081073 A1 4/2004 Walton et al.
2004/0081195 A1 4/2004 El-Maleh et al.
2004/0087325 A1 5/2004 Cheng et al.
2004/0095907 A1 5/2004 Agee et al.
2004/0097215 A1 5/2004 Abe et al.
2004/0097240 A1 5/2004 Chen et al.
2004/0098505 A1 5/2004 Clemmensen
2004/0105489 A1 6/2004 Kim et al.
2004/0114618 A1 6/2004 Tong et al.
2004/0120411 A1 6/2004 Walton et al.
2004/0125792 A1 7/2004 Bradbury et al.
2004/0128605 A1 7/2004 Sibecas et al.
2004/0131007 A1 7/2004 Smee et al.
2004/0131008 A1 7/2004 Zuniga et al.
2004/0131038 A1 7/2004 Kim et al.
2004/0131110 A1 7/2004 Alard et al.
2004/0136344 A1 7/2004 Kim et al.
2004/0136349 A1 7/2004 Walton et al.
2004/0156328 A1 8/2004 Walton et al.
2004/0160914 A1 8/2004 Sarkar et al.
2004/0160933 A1 8/2004 Odenwalder et al.
2004/0162083 A1 8/2004 Chen et al.
2004/0165564 A1 8/2004 Kim et al.
2004/0166867 A1 8/2004 Hawe et al.
2004/0166887 A1* 8/2004 Laroia et al. 455/522
2004/0170152 A1 9/2004 Nagao et al.
2004/0170157 A1 9/2004 Kim et al.
2004/0171384 A1 9/2004 Holma et al.
2004/0171385 A1 9/2004 Haustein et al.
2004/0178954 A1 9/2004 Vook et al.
2004/0179480 A1 9/2004 Attar et al.
2004/0179494 A1 9/2004 Attar et al.
2004/0179506 A1 9/2004 Padovani et al.
2004/0179627 A1 9/2004 Ketchum et al.
2004/0181569 A1 9/2004 Attar et al.
2004/0185792 A1 9/2004 Alexiou et al.
2004/0190640 A1 9/2004 Dubuc et al.
2004/0202257 A1 10/2004 Mehta et al.
2004/0208138 A1 10/2004 Hayashi et al.
2004/0218520 A1 11/2004 Aizawa et al.
2004/0219819 A1 11/2004 Di Mascio et al.
2004/0219919 A1 11/2004 Whinnett et al.
2004/0224711 A1 11/2004 Panchal et al.
2004/0228267 A1 11/2004 Agrawal et al.
2004/0228313 A1 11/2004 Cheng et al.
2004/0229615 A1 11/2004 Agrawal et al.
2004/0240419 A1 12/2004 Abrishamkar et al.
2004/0240572 A1 12/2004 Brutel et al.
2004/0248604 A1 12/2004 Vaidyanathan et al.
2004/0252529 A1 12/2004 Huber et al.
2004/0252629 A1 12/2004 Hasegawa et al.
2004/0252655 A1 12/2004 Lim et al.
2004/0252662 A1 12/2004 Cho
2004/0257979 A1 12/2004 Ro et al.
2004/0264507 A1 12/2004 Cho et al.
2004/0264585 A1 12/2004 Borran et al.
2004/0264593 A1 12/2004 Shim et al.
2005/0002412 A1 1/2005 Sagfors et al.
2005/0002440 A1 1/2005 Alamouti et al.
2005/0002467 A1 1/2005 Seo et al.
2005/0002468 A1 1/2005 Walton et al.
2005/0003782 A1 1/2005 Wintzell
2005/0008091 A1 1/2005 Boutros et al.
2005/0009486 A1 1/2005 Al-Dhahir et al.
2005/0013263 A1 1/2005 Kim et al.
2005/0025093 A1 2/2005 Yun et al.
2005/0030886 A1 2/2005 Wu et al.
2005/0030964 A1 2/2005 Tiedemann, Jr. et al.
2005/0034079 A1 2/2005 Gunasekar et al.
2005/0041611 A1 2/2005 Sandhu
2005/0041618 A1 2/2005 Wei et al.
2005/0041750 A1 2/2005 Lau et al.
2005/0041775 A1 2/2005 Batzinger et al.
2005/0044206 A1 2/2005 Johansson et al.
2005/0047517 A1 3/2005 Georgios et al.
2005/0052991 A1 3/2005 Kadous et al.
2005/0053081 A1 3/2005 Andersson et al.
2005/0053151 A1 3/2005 Lin et al.
2005/0063298 A1 3/2005 Ling et al.
2005/0068921 A1 3/2005 Liu
2005/0073976 A1 4/2005 Fujii
2005/0084000 A1 4/2005 Krauss et al.
2005/0085195 A1 4/2005 Tong et al.
2005/0085197 A1 4/2005 Laroia et al.
2005/0085236 A1 4/2005 Gerlach et al.
2005/0111397 A1 5/2005 Attar et al.
2005/0113100 A1 5/2005 Oprescu-Surcobe et al.
2005/0122898 A1 6/2005 Jang et al.
2005/0128683 A1 6/2005 Watanabe et al.
2005/0128983 A1 6/2005 Kim et al.
2005/0135324 A1 6/2005 Kim et al.
2005/0135498 A1 6/2005 Yee
2005/0141624 A1 6/2005 Lakshmipathi et al.
2005/0147024 A1 7/2005 Jung et al.
2005/0147025 A1 7/2005 Auer et al.
2005/0152484 A1 7/2005 Sandhu et al.
2005/0157807 A1 7/2005 Shim et al.
2005/0159162 A1 7/2005 Park
2005/0164709 A1 7/2005 Balasubramanian et al.
2005/0165949 A1 7/2005 Teague
2005/0174981 A1 8/2005 Heath et al.
2005/0175070 A1 8/2005 Grob et al.
2005/0180311 A1 8/2005 Wang et al.
2005/0180313 A1 8/2005 Kim et al.
2005/0181799 A1 8/2005 Laroia et al.
2005/0192011 A1 9/2005 Hong et al.
2005/0195733 A1 9/2005 Walton et al.
2005/0195852 A1 9/2005 Vayanos et al.
2005/0195886 A1 9/2005 Lampinen et al.
2005/0201296 A1 9/2005 Vannithamby et al.
2005/0204247 A1 9/2005 Guo et al.
2005/0207367 A1 9/2005 Onggosanusi et al.
2005/0215196 A1 9/2005 Krishnan et al.
2005/0215251 A1 9/2005 Krishnan et al.
2005/0226204 A1 10/2005 Uehara et al.
2005/0239465 A1 10/2005 Lee et al.
2005/0243791 A1 11/2005 Park et al.
2005/0246548 A1 11/2005 Laitinen et al.
2005/0249266 A1 11/2005 Brown et al.
2005/0254416 A1 11/2005 Laroia et al.
2005/0254467 A1 11/2005 Li et al.
2005/0254477 A1 11/2005 Lee et al.
2005/0254556 A1 11/2005 Fujii et al.
2005/0259005 A1 11/2005 Chiang et al.
2005/0259723 A1 11/2005 Blanchard et al.
2005/0259757 A1 11/2005 Wu et al.
2005/0265220 A1 12/2005 Erlich et al.
2005/0265293 A1 12/2005 Ro et al.
2005/0265470 A1 12/2005 Kishigami et al.
2005/0271012 A1 12/2005 Agrawal et al.
2005/0276347 A1 12/2005 Mujtaba et al.
2005/0276348 A1 12/2005 Vandenameele

(56) **References Cited**

U.S. PATENT DOCUMENTS

2005/0277423 A1 12/2005 Sandhu et al.
2005/0281029 A1 12/2005 Inamoto et al.
2005/0281290 A1 12/2005 Khandekar et al.
2005/0282500 A1 12/2005 Wang et al.
2005/0286408 A1 12/2005 Jin et al.
2005/0289256 A1 12/2005 Cudak et al.
2006/0002451 A1 1/2006 Fukuta et al.
2006/0013285 A1 1/2006 Kobayashi et al.
2006/0018336 A1 1/2006 Sutivong et al.
2006/0018347 A1 1/2006 Agrawal et al.
2006/0018397 A1 1/2006 Sampath et al.
2006/0026344 A1 2/2006 Sun Hsu et al.
2006/0029289 A1 2/2006 Yamaguchi et al.
2006/0034164 A1 2/2006 Ozluturk et al.
2006/0034173 A1 2/2006 Teague et al.
2006/0039332 A1 2/2006 Kotzin
2006/0039344 A1 2/2006 Khan
2006/0039500 A1 2/2006 Yun et al.
2006/0040655 A1 2/2006 Kim et al.
2006/0045003 A1 3/2006 Choi et al.
2006/0050770 A1 3/2006 Wallace et al.
2006/0056340 A1 3/2006 Hottinen et al.
2006/0057958 A1 3/2006 Ngo et al.
2006/0067421 A1 3/2006 Walton et al.
2006/0078075 A1 4/2006 Stamoulis et al.
2006/0083159 A1 4/2006 Laroia et al.
2006/0083183 A1 4/2006 Teague et al.
2006/0089104 A1 4/2006 Kaikkonen et al.
2006/0092054 A1 5/2006 Li et al.
2006/0093065 A1 5/2006 Thomas et al.
2006/0104333 A1 5/2006 Rainbolt et al.
2006/0104381 A1 5/2006 Menon et al.
2006/0107171 A1 5/2006 Skraparlis
2006/0109814 A1 5/2006 Kuzminskiy et al.
2006/0111054 A1 5/2006 Pan et al.
2006/0114858 A1 6/2006 Walton et al.
2006/0120469 A1 6/2006 Maltsev et al.
2006/0120471 A1 6/2006 Learned et al.
2006/0126491 A1 6/2006 Ro et al.
2006/0133455 A1 6/2006 Agrawal et al.
2006/0133521 A1 6/2006 Sampath et al.
2006/0140289 A1 6/2006 Mandyam et al.
2006/0146867 A1 7/2006 Lee et al.
2006/0153239 A1 7/2006 Julian et al.
2006/0155534 A1 7/2006 Lin et al.
2006/0156199 A1 7/2006 Palanki et al.
2006/0172704 A1 8/2006 Nishio et al.
2006/0189321 A1 8/2006 Oh et al.
2006/0203708 A1 9/2006 Sampath et al.
2006/0203794 A1 9/2006 Sampath et al.
2006/0203891 A1 9/2006 Sampath et al.
2006/0203932 A1 9/2006 Palanki et al.
2006/0209670 A1 9/2006 Gorokhov et al.
2006/0209732 A1 9/2006 Gorokhov et al.
2006/0209754 A1 9/2006 Ji et al.
2006/0209764 A1 9/2006 Kim et al.
2006/0209973 A1 9/2006 Gorokhov et al.
2006/0215777 A1 9/2006 Krishnamoorthi
2006/0218459 A1 9/2006 Hedberg
2006/0223449 A1 10/2006 Sampath et al.
2006/0233124 A1 10/2006 Palanki
2006/0233222 A1 10/2006 Reial et al.
2006/0262754 A1 11/2006 Andersson et al.
2006/0270427 A1 11/2006 Shida et al.
2006/0274836 A1 12/2006 Sampath et al.
2006/0280114 A1 12/2006 Osseiran et al.
2006/0285485 A1 12/2006 Agrawal et al.
2006/0285515 A1 12/2006 Julian et al.
2006/0286974 A1 12/2006 Gore et al.
2006/0286982 A1 12/2006 Prakash et al.
2006/0286995 A1 12/2006 Onggosanusi et al.
2006/0291371 A1 12/2006 Sutivong et al.
2006/0292989 A1 12/2006 Gerlach et al.
2007/0004430 A1 1/2007 Hyun et al.
2007/0005749 A1 1/2007 Sampath
2007/0009011 A1 1/2007 Coulsonn et al.
2007/0019596 A1 1/2007 Barriac et al.
2007/0025345 A1 2/2007 Bachl et al.
2007/0041404 A1 2/2007 Palanki et al.
2007/0041457 A1 2/2007 Kadous et al.
2007/0047485 A1 3/2007 Gorokhov et al.
2007/0047495 A1 3/2007 Ji et al.
2007/0049218 A1 3/2007 Gorokhov et al.
2007/0053282 A1 3/2007 Tong et al.
2007/0053383 A1 3/2007 Choi et al.
2007/0060178 A1 3/2007 Gorokhov et al.
2007/0064669 A1 3/2007 Classon et al.
2007/0070952 A1 3/2007 Yoon et al.
2007/0071147 A1 3/2007 Sampath et al.
2007/0097853 A1 5/2007 Khandekar et al.
2007/0097889 A1 5/2007 Wang et al.
2007/0097897 A1 5/2007 Teague et al.
2007/0097908 A1 5/2007 Khandekar et al.
2007/0097909 A1 5/2007 Khandekar et al.
2007/0097910 A1 5/2007 Ji et al.
2007/0097922 A1 5/2007 Parekh et al.
2007/0097927 A1 5/2007 Gorokhov et al.
2007/0097942 A1 5/2007 Gorokhov et al.
2007/0097981 A1 5/2007 Papasakellariou
2007/0098050 A1 5/2007 Khandekar et al.
2007/0098120 A1 5/2007 Wang et al.
2007/0099666 A1 5/2007 Astely et al.
2007/0110172 A1 5/2007 Faulkner et al.
2007/0115795 A1 5/2007 Gore et al.
2007/0149194 A1 6/2007 Das et al.
2007/0149228 A1 6/2007 Das
2007/0159969 A1 7/2007 Das et al.
2007/0160115 A1 7/2007 Palanki et al.
2007/0165738 A1 7/2007 Barriac et al.
2007/0177631 A1 8/2007 Popovic et al.
2007/0177681 A1 8/2007 Choi et al.
2007/0183303 A1 8/2007 Pi et al.
2007/0183386 A1 8/2007 Muharemovicc et al.
2007/0207812 A1 9/2007 Borran et al.
2007/0211616 A1 9/2007 Khandekar et al.
2007/0211667 A1 9/2007 Agrawal et al.
2007/0230324 A1 10/2007 Li et al.
2007/0242653 A1 10/2007 Yang et al.
2007/0263743 A1 11/2007 Lee et al.
2007/0280336 A1 12/2007 Zhangg et al.
2007/0281702 A1 12/2007 Lim et al.
2008/0039129 A1 2/2008 Li et al.
2008/0063099 A1 3/2008 Laroia et al.
2008/0095223 A1 4/2008 Tong et al.
2008/0095262 A1 4/2008 Hoo et al.
2008/0151829 A1 6/2008 Khandekar et al.
2008/0181139 A1 7/2008 Rangarajan et al.
2008/0214222 A1 9/2008 Atarashi et al.
2008/0253279 A1 10/2008 Ma et al.
2008/0267157 A1 10/2008 Lee et al.
2008/0299983 A1 12/2008 Kwak et al.
2009/0003466 A1 1/2009 Taherzadehboroujeni et al.
2009/0010351 A1 1/2009 Laroia et al.
2009/0022098 A1 1/2009 Novak et al.
2009/0041150 A1 2/2009 Tsai et al.
2009/0110103 A1 4/2009 Maltsev et al.
2009/0129501 A1 5/2009 Mehta et al.
2009/0180459 A1 7/2009 Orlikk et al.
2009/0197646 A1 8/2009 Tamura et al.
2009/0201826 A1 8/2009 Gorokhov et al.
2009/0201872 A1 8/2009 Gorokhov et al.
2009/0213750 A1 8/2009 Gorokhov et al.
2009/0213950 A1 8/2009 Gorokhov et al.
2009/0262641 A1 10/2009 Laroia et al.
2009/0262699 A1 10/2009 Wengerterr et al.
2009/0285163 A1 11/2009 Zhang et al.
2009/0287977 A1 11/2009 Chang et al.
2010/0002570 A9 1/2010 Walton et al.
2010/0135242 A1 6/2010 Nam et al.
2010/0220800 A1 9/2010 Erell et al.
2010/0232384 A1 9/2010 Farajidana et al.
2010/0238902 A1 9/2010 Ji et al.
2010/0254263 A1 10/2010 Chen et al.
2011/0064070 A1 3/2011 Gore et al.

(56) **References Cited**

U.S. PATENT DOCUMENTS

2011/0235733	A1	9/2011	Laroia et al.
2011/0235745	A1	9/2011	Laroia et al.
2011/0235746	A1	9/2011	Laroia et al.
2011/0235747	A1	9/2011	Laroia et al.
2011/0255518	A9	10/2011	Agrawal et al.
2011/0306291	A1	12/2011	Ma et al.
2012/0002623	A1	1/2012	Khandekar et al.
2012/0063441	A1	3/2012	Palanki
2012/0120925	A1	5/2012	Kadous et al.
2012/0140798	A1	6/2012	Kadous et al.
2012/0140838	A1	6/2012	Kadous et al.
2013/0016678	A1	1/2013	Laroia et al.
2013/0208681	A1	8/2013	Gore et al.
2013/0287138	A1	10/2013	Ma et al.
2013/0315200	A1	11/2013	Gorokhov et al.
2014/0247898	A1	9/2014	Laroia et al.
2014/0376518	A1	12/2014	Palanki et al.

FOREIGN PATENT DOCUMENTS

CA	2477536		9/2003
CA	2540688		5/2005
CA	2577369	A1	3/2006
CL	19931400		12/1994
CL	1997846		1/1998
CL	009531997		1/1998
CL	1386344		12/2002
CL	1424835		6/2003
CL	27102004		8/2005
CL	22892004		9/2005
CL	30862004		10/2005
CL	29932005		5/2006
CL	15202006		12/2006
CL	22032006		2/2007
CL	15212006		3/2007
CL	14922006		4/2007
CL	14892006		5/2007
CL	14902006		5/2007
CL	29032006		5/2007
CL	29062006		5/2007
CL	29042006		6/2007
CL	29022006		7/2007
CL	29082006		10/2007
CL	46151		12/2009
CL	29012006		1/2010
CL	29072006		1/2010
CN	1252919		5/2000
CN	1267437		9/2000
CN	1284795		2/2001
CN	1296682		5/2001
CN	1344451		4/2002
CN	1346221		4/2002
CN	1383631		12/2002
CN	1402916	A	3/2003
CN	1132474	C	12/2003
CN	1467938	A	1/2004
CN	1487755	A	4/2004
CN	1520220		8/2004
CN	1525678		9/2004
CN	1636346		7/2005
CN	1642051	A	7/2005
CN	1642335	A	7/2005
CN	1647436	A	7/2005
DE	19800653	A1	7/1999
DE	19800953	C1	7/1999
DE	19957288	C1	5/2001
DE	10240138		8/2003
DE	10254384	A1	6/2004
EP	0488976	A2	6/1992
EP	0568291	A2	11/1993
EP	0740431	A1	10/1996
EP	0786889		7/1997
EP	0805576	A2	11/1997
EP	0807989	A1	11/1997
EP	0844796	A2	5/1998
EP	0981222		2/2000
EP	1001570	A2	5/2000
EP	1047209	A1	10/2000
EP	1061687	A1	12/2000
EP	1091516		4/2001
EP	1093241	A1	4/2001
EP	1148673		10/2001
EP	1172983	A2	1/2002
EP	1180907	A2	2/2002
EP	1 187 506		3/2002
EP	1204217	A1	5/2002
EP	1255369	A1	11/2002
EP	1267513	A2	12/2002
EP	1074099	B1	2/2003
EP	1286490	A2	2/2003
EP	1335504	A2	8/2003
EP	1351538	A1	10/2003
EP	1376920	A1	1/2004
EP	1392073	A1	2/2004
EP	1434365	A2	6/2004
EP	1441469	A2	7/2004
EP	1445873		8/2004
EP	1465449	A1	10/2004
EP	1478204	A2	11/2004
EP	1507421	A1	2/2005
EP	1513356		3/2005
EP	1513356	A2	3/2005
EP	1531575	A2	5/2005
EP	1533950	A1	5/2005
EP	1536584	A1	6/2005
EP	1538863	A1	6/2005
EP	1542488		6/2005
EP	1601149		11/2005
EP	1643669		4/2006
EP	1898542	A1	3/2008
EP	1941693		7/2011
FR	2584884	A1	1/1987
GB	2279540		1/1995
GB	2279540	A	1/1995
GB	2348776	A	10/2000
GB	2412541		9/2005
IL	167573		2/2011
IL	201872		5/2012
JP	H04111544	A	4/1992
JP	04301931	A	10/1992
JP	H0746248	A	2/1995
JP	7336323	A	12/1995
JP	8116329	A	5/1996
JP	08288927		11/1996
JP	9008725	A	1/1997
JP	H09501548	A	2/1997
JP	9131342	A	5/1997
JP	9182148	A	7/1997
JP	09214404		8/1997
JP	9284200	A	10/1997
JP	10117162		5/1998
JP	H10210000	A	8/1998
JP	10322304	A	12/1998
JP	H11168453	A	6/1999
JP	11191756	A	7/1999
JP	11196109	A	7/1999
JP	11508417	T	7/1999
JP	11239155	A	8/1999
JP	11298954	A	10/1999
JP	11331927	A	11/1999
JP	2000022618	A	1/2000
JP	2000102065	A	4/2000
JP	2000184425	A	6/2000
JP	2000511750	A	9/2000
JP	2000-332724		11/2000
JP	2001016644	A2	1/2001
JP	2001045573	A	2/2001
JP	2001057545	A	2/2001
JP	2001156732	A	6/2001
JP	2001238269		8/2001
JP	2001245355	A	9/2001
JP	2001249802	A	9/2001
JP	2001285927	A	10/2001

(56) **References Cited**

FOREIGN PATENT DOCUMENTS

JP	2001521698	A	11/2001
JP	2001526012	T	12/2001
JP	2002026790	A	1/2002
JP	2002111556	A	4/2002
JP	2002515203	T	5/2002
JP	2002290148	A	10/2002
JP	2002534925	A	10/2002
JP	2002534941		10/2002
JP	2002538696	A	11/2002
JP	200318054		1/2003
JP	2003032218		1/2003
JP	2003500909		1/2003
JP	200369472		3/2003
JP	2003101515		4/2003
JP	2003169367	A	6/2003
JP	2003174426		6/2003
JP	2003199173	A	7/2003
JP	2003520523		7/2003
JP	2003235072	A	8/2003
JP	2003249907	A	9/2003
JP	2003292667	A	10/2003
JP	2003318857	A	11/2003
JP	2003347985	A	12/2003
JP	2003348047		12/2003
JP	2003536308	A	12/2003
JP	2004007643	A	1/2004
JP	2004023716		1/2004
JP	2004048716		2/2004
JP	200472457		3/2004
JP	2004072157	A	3/2004
JP	2004096142	A	3/2004
JP	2004507151	A	3/2004
JP	2004507950	A	3/2004
JP	2004153676		5/2004
JP	2004158901	A	6/2004
JP	2004162388	A	6/2004
JP	2004194262	A	7/2004
JP	2004201296	A	7/2004
JP	2004215022	A	7/2004
JP	2004221972		8/2004
JP	2004266818	A	9/2004
JP	2004529524	T	9/2004
JP	2004297276	A	10/2004
JP	2004297370	A	10/2004
JP	2004297756		10/2004
JP	2004534456		11/2004
JP	2004535106	A	11/2004
JP	2005-020530		1/2005
JP	2005006337	A	1/2005
JP	2005502218	T	1/2005
JP	2005506757		3/2005
JP	2005110130	A	4/2005
JP	2005130491	A	5/2005
JP	2005167502	A	6/2005
JP	2005197772		7/2005
JP	2005203961		7/2005
JP	2005521327	T	7/2005
JP	2005521358		7/2005
JP	2005236678	A	9/2005
JP	2006505172		2/2006
JP	2006505230	A	2/2006
JP	2006506860	A	2/2006
JP	2006211537	A	8/2006
JP	2006518173	A	8/2006
JP	2006524930	A	11/2006
JP	2007500486	A	1/2007
JP	2007503790		2/2007
JP	2007519281		7/2007
JP	2007525043	T	8/2007
JP	2007527127		9/2007
JP	2008505587	A	2/2008
JP	2008535398		8/2008
JP	4188372	B2	11/2008
JP	2008546314		12/2008
JP	04694628	B2	6/2011
KR	0150275	B1	11/1998
KR	20000060428		10/2000
KR	100291476	B1	3/2001
KR	20010056333		4/2001
KR	20010087715	A	9/2001
KR	20030007965		1/2003
KR	20030035969	A	5/2003
KR	20040063057		7/2004
KR	200471652		8/2004
KR	20040103441	A	12/2004
KR	20050061559		6/2005
KR	20050063826	A	6/2005
KR	100606099		7/2006
RU	95121152		12/1997
RU	2141168	C1	11/1999
RU	2141706	C1	11/1999
RU	2159007	C2	11/2000
RU	2162275	C2	1/2001
RU	2183387	C2	6/2002
RU	2192094	C1	10/2002
RU	2197778	C2	1/2003
RU	2201033	C2	3/2003
RU	2207723	C1	6/2003
RU	2207723	C1	6/2003
RU	2208913		7/2003
RU	2210866	C2	8/2003
RU	2216101	C2	11/2003
RU	2216103	C2	11/2003
RU	2216105		11/2003
RU	2225080		2/2004
RU	2235432	C2	8/2004
RU	22235429		8/2004
RU	2237379	C2	9/2004
RU	22238611	C1	10/2004
RU	2242091D2		12/2004
RU	2003125268		2/2005
RU	2285388		3/2005
RU	2250564		4/2005
RU	2257008		7/2005
RU	2267224		12/2005
RU	2005129079		2/2006
RU	2285338	C2	10/2006
RU	2285351	C2	10/2006
RU	2292655		1/2007
RU	2335864	C2	10/2008
RU	2349043	C2	3/2009
SU	1320883		6/1987
TW	508960		11/2002
TW	510132		11/2002
TW	200302642		8/2003
TW	200401572		1/2004
TW	I232040		5/2005
TW	1248266		1/2006
TW	200718128		5/2007
WO	WO2004004370		1/1920
WO	WO9408432	A1	4/1994
WO	9521494		8/1995
WO	WO-9613920	A1	5/1996
WO	WO9701256		1/1997
WO	WO9737456	A1	10/1997
WO	WO-9746033	A2	12/1997
WO	9800946		1/1998
WO	WO-9814026	A1	4/1998
WO	WO9837706	A2	8/1998
WO	WO9848581	A1	10/1998
WO	WO9853561		11/1998
WO	WO9854919	A2	12/1998
WO	9941871		8/1999
WO	WO-9944313	A1	9/1999
WO	WO-9944383	A1	9/1999
WO	9952250		10/1999
WO	WO9953713	A2	10/1999
WO	9960729		11/1999
WO	WO-9959265	A1	11/1999
WO	WO9960729	A1	11/1999
WO	0004728		1/2000
WO	WO0002397		1/2000
WO	WO0033503	A1	6/2000
WO	WO-0033848	A1	6/2000

(56) **References Cited**

FOREIGN PATENT DOCUMENTS

WO	0051389	A1	8/2000
WO	WO0070897		11/2000
WO	WO0101596		1/2001
WO	WO0117125	A1	3/2001
WO	WO0126269	A1	4/2001
WO	WO-0139523	A2	5/2001
WO	WO0145300		6/2001
WO	WO-0148969	A2	7/2001
WO	WO-0158054	A1	8/2001
WO	WO-0160106	A1	8/2001
WO	0165637	A2	9/2001
WO	WO0169814	A1	9/2001
WO	WO0182543	A2	11/2001
WO	WO-0182544	A2	11/2001
WO	WO-0189112	A1	11/2001
WO	0195427	A2	12/2001
WO	WO0193505		12/2001
WO	0204936		1/2002
WO	WO0207375	A1	1/2002
WO	0215432	A1	2/2002
WO	WO0215616	A2	2/2002
WO	WO-0219746	A1	3/2002
WO	0231991		4/2002
WO	0233848		4/2002
WO	0245293	A2	6/2002
WO	WO0245456	A1	6/2002
WO	WO0249305		6/2002
WO	WO-0249306	A2	6/2002
WO	WO0249385	A2	6/2002
WO	WO02060138	A2	8/2002
WO	WO02065675		8/2002
WO	WO02082689	A2	10/2002
WO	WO-02082743	A2	10/2002
WO	WO0293819		11/2002
WO	WO02089434	A1	11/2002
WO	WO02093782	A1	11/2002
WO	WO02100027	A1	12/2002
WO	03001981		1/2003
WO	03007965		1/2003
WO	WO-03001696	A2	1/2003
WO	WO03001696	A2	1/2003
WO	WO03001761	A1	1/2003
WO	WO-03003617	A2	1/2003
WO	WO03019819		3/2003
WO	WO03030414	A1	4/2003
WO	WO03034644	A1	4/2003
WO	WO03043262	A1	5/2003
WO	WO03043369		5/2003
WO	03049409	A2	6/2003
WO	03058871		7/2003
WO	WO03058871	A1	7/2003
WO	03069816	A2	8/2003
WO	WO03067783		8/2003
WO	WO03069832	A1	8/2003
WO	WO03073646		9/2003
WO	WO03075479	A1	9/2003
WO	WO03085876		10/2003
WO	WO03088538	A1	10/2003
WO	WO03094384		11/2003
WO	2004002011	A1	12/2003
WO	WO03103331		12/2003
WO	WO2004002047	A1	12/2003
WO	2004008681		1/2004
WO	WO2004008671	A1	1/2004
WO	WO2004015912		2/2004
WO	WO2004016007		2/2004
WO	WO2004021605	A1	3/2004
WO	WO2004023834	A1	3/2004
WO	2004028037	A1	4/2004
WO	2004032443		4/2004
WO	WO 2004/030238		4/2004
WO	2004038972		5/2004
WO	2004038984	A2	5/2004
WO	2004040825		5/2004
WO	WO2004038954		5/2004
WO	WO-2004038988	A2	5/2004
WO	WO-2004040690	A2	5/2004
WO	WO-2004040827	A2	5/2004
WO	WO 2004/051872		6/2004
WO	WO2004047354	A1	6/2004
WO	WO2004049618	A1	6/2004
WO	2004056022	A2	7/2004
WO	WO2004062255		7/2004
WO	WO2004064294		7/2004
WO	WO2004064295		7/2004
WO	WO2004066520		8/2004
WO	WO2004068721	A2	8/2004
WO	WO2004075023		9/2004
WO	WO2004075442		9/2004
WO	WO2004075448		9/2004
WO	WO2004075468		9/2004
WO	WO2004075596		9/2004
WO	WO2004077850	A2	9/2004
WO	WO2004084509		9/2004
WO	WO-2004086706	A1	10/2004
WO	WO-2004086711	A1	10/2004
WO	WO2004095730	A1	11/2004
WO	WO-2004095851	A2	11/2004
WO	WO2004095854		11/2004
WO	WO-2004098072	A2	11/2004
WO	WO2004098222		11/2004
WO	WO2004102815		11/2004
WO	WO2004102816	A2	11/2004
WO	2004114564	A1	12/2004
WO	2004114615	A1	12/2004
WO	WO2004105272	A1	12/2004
WO	WO2004114549		12/2004
WO	2005002253		1/2005
WO	WO2005002253	A1	1/2005
WO	WO-2005005527	A1	1/2005
WO	2005015797		2/2005
WO	2005018270		2/2005
WO	WO2005011163	A1	2/2005
WO	WO-2005015795	A1	2/2005
WO	WO2005015810		2/2005
WO	WO-2005015941	A2	2/2005
WO	WO2005020488	A1	3/2005
WO	WO2005020490		3/2005
WO	WO2005022811		3/2005
WO	WO2005025110	A2	3/2005
WO	WO2005032004	A1	4/2005
WO	2005043780	A1	5/2005
WO	WO2005043855		5/2005
WO	WO2005046080	A1	5/2005
WO	2005055465	A1	6/2005
WO	WO2005055484	A1	6/2005
WO	WO-2005055527	A1	6/2005
WO	WO2005060192	A1	6/2005
WO	WO-2005065062	A2	7/2005
WO	WO-2005069538	A1	7/2005
WO	WO-2005096538	A1	7/2005
WO	WO2005074184		8/2005
WO	2005086440	A1	9/2005
WO	WO2005122628		12/2005
WO	2006007292	A2	1/2006
WO	WO2006019710		2/2006
WO	WO-2006026344	A1	3/2006
WO	WO2006044487		4/2006
WO	2006062356	A1	6/2006
WO	2006069301		6/2006
WO	WO2006069300		6/2006
WO	WO2006069397		6/2006
WO	WO2006077696		7/2006
WO	2004073276		8/2006
WO	2006099545		9/2006
WO	2006099577		9/2006
WO	WO-2006096784	A1	9/2006
WO	WO-2006099349	A1	9/2006
WO	2006127544		11/2006
WO	WO-2006134032	A1	12/2006
WO	WO-2006138196	A1	12/2006
WO	WO-2006138573	A2	12/2006
WO	WO2006138581	A2	12/2006
WO	2007022430	A2	2/2007

(56) **References Cited**

FOREIGN PATENT DOCUMENTS

WO	2007024935	3/2007
WO	WO-2007024934	3/2007
WO	WO2007025160	3/2007
WO	WO-2007051159 A2	5/2007

OTHER PUBLICATIONS

Fuchs, et al., "A Novel Tree-Based Scheduling Algorithm for the Downlink of Multi-User MIMO Systems with ZF Beamforming," IEEE International Conference on Acoustics, Speech, and Signal Processing, 2005, Proceedings, Philadelphia, PA, pp. 1121-1124.
Schnell, et al., "A Promising New Wideband Multiple-Access Scheme for Future Mobile Communications Systems," European Transactions on Telecommunications, Wiley & Sons, Chichester, GB, vol. 10, No. 4, Jul. 1999, pp. 417-427.
International Search Report—PCT/US06/014878, International Search Authority—European Patent Office, Aug. 25, 2006.
Written Opinion—PCT/US06/014878, International Search Authority—European Patent Office, Aug. 25, 2006.
International Preliminary Report on Patentability—PCT/US06/014878, The International Bureau of WIPO—Geneva, Switzerland, Oct. 23, 2007.
3rd Generation Partnership Project; Technical Specification Group Radio Access Network; Physical Layer Aspects for Evolved UTRA (Release 7), 3GPP TR 25.814 v0.3.1 (Nov. 2005).
Bahai, Saltzberg, "System Architecture," Multi-Carrier Digital Communications, Kluwer Academic, New York, NY, XP-002199501, 1999, pp. 17-21.
Bingham, "Other Types of MCM," ADSL, VDSL, and Multicarrier Modulation, John Wiley & Sons, New York, XP-002199502. 2000, pp. 111-113.
Chennakeshu, et al. "A Comparision of Diversity Schemes for a Mixed-Mode Slow Frequency-Hopped Cellular System," IEEE, 1993, pp. 1749-1753.
Chennakeshu, et al. "Capacity Analysis of a TDMA-Based Slow-Frequency-Hopped Cellular System," IEEE Transaction on Vehicular Technology, vol. 45., No. 3 Aug. 1996, pp. 531-542.
Chiani, et al. "Outage Evaluation for Slow Frequency-Hopping Mobile Radio Systems" IEEE Transactions on Communications, vol. 47, No. 12, pp. 1865-1874, Dec. 1999.
Choi, et al., "Design of the Optimum Pilot Pattern for Channel Estimation in OFDM Systems," Global Telecommunications Conference, IEEE Communications Society, pp. 3661-3665, Globecom, Dallas, Texas (2004).
Czylwik, "Comparison Between Adaptive OFDM and Single Carrier Modulation with Frequency Domain Equalization," IEEE 47th Vehicular Technology Conference, vol. 2, May 4-7, 1997, pp. 865-869.
Das, et al. "On the Reverse Link Interference Structure for Next Generation Cellular Systems," European Microwave Conference, Oct. 11, 2004, pp. 3068-3072.
Hill, et al., "Cyclic Shifting and Time Inversion of Partial Transmit Sequences to Reduce the Peak-to-Average Power Ratio in OFDM," IEEE International Symposium on Personal, Indoor and Mobile Radio Communications, vol. 2, Sep. 18, 2000, Piscataway, NJ, pp. 1256-1259.
Je, et al. "A Novel Multiple Access Scheme for Uplink Cellular Systems," IEEE Vehicular Technology Conference, Sep. 26, 2004 pp. 984-988.
Kaleh, "Channel Equalization for Block Transmission Systems," IEEE Journal on Selected Areas in Communications, vol. 13, No. 1, Jan. 1995, pp. 110-121.
Kappes, J.M., and Sayegh, S.I., "Programmable Demultiplexer/Demodulator Processor," COMSAT Laboratories, IEEE, 1990, pp. 230-234.
Keller, et al., "Adaptive Multicarrier Modulation: A Convenient Framework for Time-Frequency Processing in Wireless Communications," Proceedings of the IEEE, vol. 88, No. 5, May 2000, pp. 611-640.
Kim, et al. "Performance of TDMA System With SFH and 2-Bit Differentially Detected GMSK Over Rayleigh Fading Channel," IEEE Vehicular Technology Conference, Apr. 28, 1996, pp. 789-793.
Kishiyama Y et al: "Investigation of Optimum Pilot Channel Structure for VSF-OFCDM Broadband Wireless Access in Forward Link", IEEE Vehicular Technology Conference, New York, NY, US, vol. 4, pp. 139-144, Apr. 22, 2003.
Kostic, et al. "Dynamic Frequency Hopping in Wireless Cellular Systems-Simulations of Full-Replacement and Reduced-Overhead Methods," IEEE Vehicular Technology Conference, May 16, 1999, pp. 914-918.
Kostic, et al. "Fundamentals of Dynamic Frequency Hopping in Cellular Systems," IEEE Journal on Selected Areas in Communications, vol. 19, No. 11, Nov. 2001 pp. 2254-2266.
LaCroix, et al., "A Study of OFDM Parameters for High Data Rate Radio LAN's," 2000 IEEE 51st Vehicular Technology Conference Proceedings, vol. 2, May 15-18, 2000, pp. 1075-1079.
Leon, et al., "Cyclic Delay Diversity for Single Carrier-Cyclic Prefix Systems," Conference Record of the Thirty-Ninth Asilomar Conference on Signals, Systems and Computers, Oct. 28, 2005, Piscataway, NJ, pp. 519-523.
Lott, "Comparison of Frequency and Time Domain Differential Modulation in an OFDM System for Wireless ATM," 1999 IEEE 49th Vehicular Technology Conference, vol. 2, Jul. 1999, pp. 877-883.
Mignone, et al., "CD3-OFDM: A New Channel Estimation Method to Improve the Spectrum Efficiency in Digital Terrestrial Television Systems," International Broadcasting Convention, Sep. 14-18, 1995 Conference Publication No. 413, IEE 1995, pp. 122-128.
Naofal Al-Dhahir: "A Bandwidth-Optimized Reduced-Complexity Equalized Multicarrier Transceiver", IEEE Transactions on Communications, vol. 45, No. 8, Aug. 1997.
Naofal Al-Dhahir: "Optimum Finite-Length Equalization for Multicarrier Transceivers", IEEE Trans. On Comm., pp. 56-64, Jan. 1996.
Nassar, Carl R., et al., "High-Performance MC-CDMA via Carrier Interferometry Codes", IEEE Transactions on Vehicular Technology, vol. 50, No. 6, Nov. 2001.
Nassar, Carl R., et al., Introduction of Carrier Interference to Spread Spectrum Multiple Access, Apr. 1999, IEEE, pp. 1-5.
NTT DoCoMo, et al.: "Orthogonal Common Pilot Channel and Scrambling Code in Evolved UTRA Downlink," 3GPP TSG RAN WG1 #42 on LTE, pp. 1-8 (Aug.-Sep. 2005).
Sari, et al., "Transmission Techniques for Digital Terrestrial TV Broadcasting," IEEE Communications Magazine, Feb. 1995, pp. 100-109.
Schnell, et al, "Application of IFDMA to Mobile Radio Transmission," IEEE 1998 International Conference on Universal Personal Communications, vol. 2, Oct. 5-9, 1998, pp. 1267-1272.
Shattil et al., "Array Control Systems for Multicarrier Protocols Using a Frequency-Shifted Feedback Cavity", IEEE, 1999.
Sklar: "Formatting and Baseband Transmission", Chapter 2, pp. 54, 104-106.
Sklar: "The process of thus correcting the channel-induced distortion is called equalization", Digital Communications, PTR Prentice Hall, Upper Saddle River, New Jersey, 1998, Formatting and Baseband Transmission, Chap. 2, Section 2.11.2, pp. 104-105.
Sorger U et al.: "Interleave FDMA-A New Spread-Spectrum Multiple-Access Scheme",Communications, Conference Record, IEEE, Atlanta, GA, Jun. 1998, pp. 1013-1017, XP010284733.
Tellado, "Multicarrier Modulation with Low Par," Kluwer Academic, Dordrecht, NL, XP-002199500, 2000, pp. 6-11 and 55-60.
Tellambura, "Use of m-sequences for OFDM Peak-to-Average Power Ratio Reduction," Electronics Letters, vol. 33, No. 15, Jul. 17, 1997, pp. 1300-1301.
Torrieri, "Cellular Frequency-Hopping CDMA Systems," IEEE Vehicular Technology Conference, May 16, 1999, pp. 919-925.
Xiaodong, et al., "M-Sequences for OFDM Peak-to-Average Power Ratio Reduction and Error Correction," Electronics Letters, vol. 33, Issue 7, Mar. 27, 1997, pp. 554-555.
Zekri, et al., "DMT Signals with Low Peak-to-Average Power Ratio," Proceedings, IEEE International Symposium on Computers and Communications, 1999, Jul. 6-8, 1999, pp. 362-368.

(56) **References Cited**

OTHER PUBLICATIONS

Wang, et al., "Improving performance of multi-user OFDM systems using bit-wise interleaver" Electronics Letters, IEE Stevenage, GB, vol. 37, No. 19, Sep. 13, 2001. pp. 1173-1174. XP006017222.
Yun, et al., "Perforrnanbe of an LDPC-Cooled Frequency-Hopping OFDMA System Based on Resource Allocation in the Uplink" Vehicular Technology Conference, 2004. VTC 2004-Spring. 2004 IEEE 59th Milan, Italy, May 17-19, 2004, Piscataway, NJ, USA, vol. 4, May 17, 2004, pp. 1925-1928, XP010766497.
Wang at al., "Improving performance of multi-user OFDM Systems using bit-wise interleaver" Electronics Letters IEE Stevenage, GB, vol. 37. No. 19, Sep. 13, 2001, pp. 1173-1174 XP006017222.
Yun et al., "Performance of an LDPC-Coded Frequency-Hopping QFDMA System Based on Resource Allocation in the Uplink" Vehicular Technology-Conference 2004. VTO 2004-Spring, 2004 IEEE 59th Milan, Italy May 17-19, 2004, Piscataway, NJ, USA, vol. 4, May 17, 2004. pp. 1925-1928. XP010766497.
Digital cellular telecommunications system (Phase 2+); Mobile radio interface layer 3 specification (GSM 04.08 version 7.7.1 Release 1998); ETSI EN 300 940 V7.7.1 (Oct. 2000), pp. 1,2,91-93.
3GPP TS 33.220 V.1.1.0 XX.XX, "3rd Generation Partnership Projects; Technical Specification Group Services And System Aspects; Generic Authentication Architecture (Gaa); Generic Bootstrapping Architecture (Release 6)" Feb. 9, 2004, pp. 1-17, figure 4, XP002996023.
Das, Arnab, et al. "Adaptive, asynchronous incremental redundancy (A-IR) with fixed transmission time intervals TTI for HSDPA." IEEE, pp. 10-83-1087.
Favre et al: "Self-Adaptive Transmission Procedure" IBM Technical Disclosure Bulletin, IBM Corporation, Sep. 1976, vol. 19, No. 4, pp. 1283-1284, New York, New York.
Groe, et al., "CDMA Mobile Radio Design," Sep. 26, 2001, Artech House, Norwood, MA 02062, pp. 257-259.
Hermann Rohling et al.,: "Performance Comparison Of Different Multiple Access Schemes For the Downlink of an OFDM Communication System", Vehicular Technology Conference, 1997, 47th IEEE, vol. 3, May 4-7, 1997, pp. 1365-1369.
J.S. Chow and J.M. Cioffi: "A cost-effective maximum likelihood receiver for multicarrier systems", Proc. IEEE Int. Conf. On Comm., pp. 948-952, Jun. 1992.
John B. Groe, Lawrence E. Larson, "CDMA Mobile Radio Design" Sep. 26, 2001, Artech House, Norwood, MA02062 580530, XP002397967, pp. 157-159.
Karsten Bruninghaus et al.,: "Multi-Carrier Spread Spectrum and It'relationship to Single-Carrier Transmission", Vehicular technology Conference, 1998, VTC 98, 48th IEEE, vol. 3, May 18-21, 1998, pp. 2329-2332.
Laroia, R. et al: "An integrated approach based on cross-layer optimization—Designing a mobile broadband wireless access network" IEEE Signal Processing Magazine, IEEE Service Center Piscataway, NJ, US, vol. 21, No. 5, Sep. 2004, pp. 20-28, XP011118149.
Lau, et al., "On the Design of MIMO Block-Fading Channels with Feedback-Link Capacity Constraint," IEEE Transactions on Communications, IEEE Service Center, Piscataway, NJ, US, vol. 52, No. 1, Jan 2004, pp. 62-70, XP001189908.
Lettieri et al. "Adaptive frame length control for improving wireless link throughput, range, and energy efficiency", INFOCOM 98, 17th Annual Joint Conference of the IEEE Computer and Communications Societies, Mar. 29-Apr. 2, 1998, pp. 564-571, vol. 2, IEEE San Francisco, CA, New York, New York.
Molisch, et al., MIMO systems with antenna selection, IEEE Microwave Magazine, URL: http://ieeexplore.ieee.org/ieee.org/iel5/6668/28677/01284943.pdf, Retrieved on Dec. 8, 2006, pp. 46-56 (2004).
Net Working Group, T. Dierks, C Allen, CERTICOM; The TLS Protocol Version 1.0; Jan. 1999.
Shattil, Steven, Multiple Access Method and system, Aug. 1999, PCT, pp. 1-25.
TIA/EIA/IS-2000 "Standards For CDMA2000 Spread Spectrum Systems" Version 1.0 Jul. 1999.
TIA/EIA/IS-95 "Mobile Station-Base Station Compatibility Standard For Dual-Mode Wideband Spread Spectrum Cellular System" Jul. 1993.
TIA-1121.001 "Physical Layer for Ultra Mobile Broadband (UMB) Air Interface Specification," 3GPP2 C.S0084-001-0, Version 2.0 (Aug. 2007).
TIA-1121.002 "Medium Access Control Layer for Ultra Mobile Broadband (UMB) Air Interface Specification," 3GPP2 C.S0084-002-0, Version 2.0 (Aug. 2007).
Tomcik, J.: "MBFDD and MBTDD Wideband Mode: Technology Overview," IEEE 802.20 Working Group Mobile Broadband Wireless Access, Jan. 2006, pp. 1-109, XP002429968.
Tomcik, J., "QFDD Technology Overview Presentation," . IEEE 802.20 Working Group on Mobile Broadband Wireless Access, Slides/pp. 1-73, Nov. 15, 2005 and Oct. 28, 2005.
Toufik I et al., "Channel allocation algorithms for multi-carrier systems", Vehicular Technology Conference, 2004. VTC2004-FALL. 2004 IEEE 60th Los Angeles, CA, USA Sep. 26-29, 2004, pp. 1129-1133, XP010786798. ISBN: 07-7803-8521-7.
S. Nishimura et al., "Downlink Null-Formation Using Receiving Antenna Selection in MIMO/SDMA", Technical Search Report of Electric Information Communication Academic Conference, February 28, 2002, vol. 101, No. 683, pp. 17-22, RCS 2001-286.
Blum et al, "On Optimum MIMO with antenna selection," IEEE International Conference on Communications; Conference Proceedings, vol. 1, Apr. 28, 2002, pp. 386-390.
Catreux, S. et al.: "Simulation results for an interference-limited multiple input multiple output cellular system"., Global Telecommunications Conference, 2000. GLOBECOM '00. IEEE. Dec. 1, 2000. vol. 2, pp. 1094-1096 http://ieeexplore.ieee.org/ie15/7153/19260/00891306.pdf?tp=& isnumber=19260&arnumber =8913063 &punumber=7153.
Chiani, et al. "Outage Evaluation for Slow Frequency-Hopping Mobile Radio Systems" IEEE Transactions on Communications, vol. 47, No. 12, Dec. 1999, pp. 1865-1874,. Note: no dated, month and year only.
Chung, S. et al.: "Low complexity algorithm for rate and power quantization in extended V-BLAST" VTC Fall 2001, IEEE 54th. Vehicular Technology Conference Proceedings. Alantic City, NJ, Oct. 7-11, 2001, vol. 1 of 4, pp. 910-914, Conf. 54.
El Gamal, et al.: "Universal Space-Time Coding," IEEE Transactions on Information Theory, vol. 49, Issue 5, pp. 1097-1119, XP011074756, ISSN: 0018-9448, May 2003.
Hochwald et al., "Achieving near-capacity on a multiple-antenna channel," IEEE Transactions on Communications, IEEE Service Center, Piscataway, New Jersey, vol. 51, No. 3, pp. 389-399 (2003).
Kiessling et al, "Short-term and long-term diagonalization of correlated MIMO channels with adaptive modulation" IEEE International Symposium on Personal, Indoor and Mobile Radio Communications, vol. 2, Sep. 15, 2002, pp. 593-597.
Kousa, M. et al: "Adaptive Binary Coding For Diversity Communication Systems" IEEE International Conference on Personal Wireless Communications Proceedings, pp. 80-84, XP000992269, 1997.
Nokia, "Uplink Considerations for UTRA LTE", 3GPP TSG RAN WG1#40bis, Beijing, CN, R1-050251, 3GPP, Apr. 4, 2005, pp. 1-9.
NTT DoCoMo, "Downlink Multiple Access Scheme for Evolved UTRA", 3GPP R1-050249, 3GPP, Apr. 4, 2005, pp. 1-8.
Prasad, N. et al.: "Analysis of Decision Feedback Detection for MIMO Rayleigh Fading Channels and Optimum Allocation of Transmitter Powers and QAM Constellations," pp. 1-10, 39th Annual Conference on Comm. Control and Comput., Monticello, IL Oct. 2001.
Qualcomm Europe: "Description and link simulations for OFDMA based E-UTRA uplink" 3GPP Draft; R1-051100, 3rd Generation Partnership Project (3GPP), Mobile Competence Centre; 650, Route Des Lucioles; F-06921 Sophia-Antipolis Cedex; France, vol. RAN WG1, No. San Diego, USA; 20051004, Oct. 4, 2005, pp. 1-10, XP050100715.
Schnell at al., "Application of IFDMA to Mobile Radio Transmission", IEEE 1998 International Conference on Universal Personal Communications, vol. 2, Oct 5-9, 1998, pp. 1267-1272.

(56) **References Cited**

OTHER PUBLICATIONS

Widdup, B. at al., "A highly-parallel VLSI architecture for a list sphere detector," IEEE International Conference, Paris, France, vol. 5, pp. 2720-2725 (2004).
Wiesel, A. et al.: "Efficient implementation of sphere demodulation" Signal Processing Advances in Wireless Communications, 2003. SPAWC 2003. 4th IEEE Workshop on Rome. Italy Jun. 15-18, 2003, Piscataway, NJ, USA, IEEE, US, Jun. 15, 2003, pp. 36-40, XP010713463.
European Search Report—EP10011743, Search Authority—Munich Patent Office, Dec. 20, 2010.
European Search Report—EP10012081, Search Authority—Munich Patent Office, Dec. 17, 2010.
European Search Report—EP10012082, Search Authority—Munich Patent Office, Dec. 20, 2010.
European Search Report—EP10012083, Search Authority—Munich Patent Office, Dec. 30, 2010.
Guo, K. Et al.: "Providing end-to-end QoS for multimedia applications in 3G wireless networks," Proceedings vol. 5242, SPIE ITCom 2003 Conf. Internet Multimedia Management Systems IV, Nov. 26, 2003, pp. 1-14, DOI: 10.1117/12.514061.
Maniatis, I. et al., "Pilots for joint channel estimation in multi-user OFDM mobile radio systems," 2002 IEEE Seventh International Symposium on Spread Spectrum Techniques and Applications, Prague, Czech Republic, Sep. 2, 2002, pp. 44-48, XP010615562.
Sumii, Kenji et al.: "A Study on Computational Complexity Reduction of Iterative Decoding for Turbo-coded MIMO-SDM Using Sphere Decoding," Technical Report ref IEICE, RCS, Nov. 9, 2010, vol. 104, No. 675, pp. 43-48.
Taiwanese Search Report—095139893—TIPO—Dec. 30, 2010.
Tomcik, T.: "QTDD Performance Report 2," IEEE 0802.20-05/88, IEEE 802.20 Working Group on Mobile Broadband Wireless Access, <http://ieee802.org/20/>, pp. 1-56, XP002386798 (Nov. 15, 2005).
Translation of Office Action in Chinese Application 2006800295980 corresponding to U.S. Appl. No. 11/260,895, citing CN1346221 and CN1383631 dated Feb. 16, 2011.
Translation of Office Action in Japan application 2008-538193 corresponding to U.S. Appl. No. 11/261,065, citing JP11196109, JP10322304 and JP9008725 dated Mar. 8, 2011.
Translation of Office Action in Korean application 10-2007-7031029 corresponding to U.S. Appl. No. 11/260,931, citing US20030202491 and KR20040063057 dated Jan. 28, 2011.
Translation of Office Action in Canadian application 2625987 corresponding to U.S. Appl. 11/261,065, citing CA2577369 dated Apr. 12, 2011.
Translation of Office Action in Chinese application 200680040236.1 corresponding to U.S. Appl. No. 11/261,065, citing US20040048609 and CN1402916 dated Feb. 18, 2011.
Translation of Office Action in Chinese application 200680048832.4 corresponding to U.S. Appl. No. 11/261,158, citing CN1132474 dated Dec. 31, 2010.
Translation of Office Action in Japanese Application 2008-514880 corresponding to U.S. Appl. No. 11/445,377, citing JP2007519281 and JP2006505172 dated Nov. 9, 2010.
Translation of Office Action in Japanese application 2008-528103 corresponding to U.S. Appl. No. 11/260,924, citing JP2005502218, JP2004534456, JP2003348047, JP2003199173, JP2004529524, JP11508417, JP2001238269, JP2005130491 and JP2003500909 dated Feb. 8, 2011.
Translation of Office Action in Japanese Application 2008-529216 corresponding to U.S. Appl. No. 11/261,159, citing GB2348776, WO2004098222, WO2005065062 and WO2004102815.Dated Jan. 11, 2011.
Translation of Office Action in Japanese application 2008-538181 corresponding to U.S. Appl. No. 11/511,735, citing WO2004064295, JP2002515203, JP8288927, JP7336323 and JP200157545 dated Jan. 25, 2011.
Yongmei Dai; Sumei Sun; Zhongding Lei; Yuan Li,: "A List Sphere Decoder based turbo receiver for groupwise space time trellis coded (GSTTC) systems," 2004 IEEE 59th Vehicular Technology Conference, vol. 2, pp. 804-808, May 17, 2004, doi: 10.1109/VETECS.2004.1388940.
B. Sklar: "The process of thus correcting the channel-induced distortion is called equalization", Digital Communications, PTR Prentice Hall, Upper Saddle River, New Jersey, 1998, Formatting and Baseband Transmission, Chap. 2, Section 2.11.2, pp. 104-106.
Taiwan Search Report—TW095129021—TIPO—May 24, 2011.
Voltz, P. J.,"Characterization of the optimum transmitter correlation matrix for MIMO with antenna subset selection", IEEE Transactions on Communications, vol. 51, No. 11, pp. 1779-1782, (Nov. 1, 2003).
Alcatel-Lucent, et al., "Dedicated Reference Signals for Precoding in E-UTRA Downlink" 3GPP Draft; R1-071718, 3rd Generation Partnership Project (3GPP), Mobile Competence Centre; 650, Route Des Lucioles; F-06921 Sophia-Antipolis Cedex; France, vol. RAN WG1, No. St. Julian; Apr. 3, 2007, XP050105640 [retrieved on Apr. 3, 2007].
Bengtsson, M. et at, "A Generalization of Weighted Subspace Fitting to Full-Rank Models", IEEE Transactions on Signal Processing, IEEE Service Center, New York, NY, US, vol. 49, No. 5, pp. 1002-1012, May 1, 2001.
Dammann, A. et al., "Beamforming in Combination with Space-Time Diversity for Broadband OFDM Systems", ICC 2002. 2002 IEEE International Conference on Communications. Apr. 28-May 2, 2002, pp. 165-171, XP010589479.
European Search Report—EP10184156—Search Authority—Munich—Jun. 14, 2012.
Ken Murakami et al., "Status Toward Standardization at IEEE 802.3ah and items on the construction of GE-PON system ," Technical Report of the Institute of Electronics, Information and Communication Engineers, Jun. 13, 2003, vol. 103, No. 124, pp. 1-6, IN2003-24.
Physical Channels and Multiplexing in Evolved UTRA Downlink TSG-RAN Working Group 1 Meeting, XX, XX, vol. RI-050590, Jun. 20, 2005, pp. 1-24, XP003006923 the whole document.
Siemens, "Evolved UTRA uplink scheduling and frequency reuse" [online], 3GPP TSG-RAN WG1 # 41 R1-050476, Internet <URL:http://www.3gpp.org/ftp/tsg_ran/WG1_RL1/TSGR1_41/Docs/R1-050476.zip>, May 9, 2005.
Viswanath, P. et al, "Opportunistic Beamforming Using Dumb Antennas" IEEE Transactions on Information Theory, IEEE USA, vol. 48, No. 6, Jun. 2002, pp. 1277-1294, XP002314708 ISSN: 0018-9448 abstract right-hand column, paragraph 1.
Yatawatta, S. et al., "Energy Efficient Channel Estimation in MIMO Systems", 2005 IEEE International Conference on Acoustics, Speech, and Signal Processing, Mar. 18-23, 2005, Philadelphia, vol. 4, pp. 317-320, Mar. 18, 2005.
Miorandi D., et al., "Analysis of master-slave protocols for real-time industrial communications over IEEE 802.11 WLANs" Industrial Informatics, 2004. INDIN '04, 2nd IEEE International Conference on Berlin, Germany Jun. 24-26, 2004. Piscataway, NJ, USA IEEE, Jun. 24, 2004, pp. 143-148, XP010782619, ISBN 0789385136, Para 3, point B.
Anonymous: "3GPP TS 36.211 V8.0.0; Evolved Universal Terrestrial Radio Access (E-UTRA); Physical channels and modulation (Release 8)" 3rd Generation Partnership Project; Technical Specification Group Radio Access Network, [Online] 2007, XP002520076 Retrieved from the Internet: URL:http://www.Sgpp.org/ftp/Specs/html-info/36211.htm> [retrieved on Sep. 27, 2007] Section 5.
Jim Tomcik, QFDD and QTDD: Technology Overview, IEEE 802.20 Working Group on Mobile Broadband Wireless Access, October 28, 2005, pp. 48-50, URL, HTTP://www.IEEE802.org/20/CONTRIBS/C802.20-05-68.ZIP.
Nokia: "Compact signalling of multi-code allocation for HSDPA", version 2,3GPP R1-02-0018, Jan. 11, 2002.
Sethi M, et al., "Code Reuse DS-CDMA—A Space Time Approach", Proceedings of the 2002 IEEE International Conference on Acoustics, Speech, and Signal Processing (ICASSP), pp. 2297-2300, May 13-17, 2002.
Bhushan N., "UHDR Overview", C30-20060522-037, Denver, CO, May 22, 2006, pp. 1-115.

(56) **References Cited**

OTHER PUBLICATIONS

Samsung: "Uplink Transmission and Multiplexing for EUTRA", 3GPP Draft; R1-050605 UL Multiplexing, Jun. 16, 2005, XP050111420.
Tachikawa (Editor); "W-CDMA Mobile Communication Systems," John Wiley & Sons Ltd., Japan, Maruzen: pp. 82-213, Jun. 25, 2001.
LG Electronics: "PAPR comparison of uplink MA schemes", 3GPP TSG RAN WG1 Meeting #41, R1-050475, May 9-13, 2005, pp. 6.
Motorola,"Uplink Numerology and Frame Structure", 3GPP TAG RAN1 #41 Meeting R1-050397, May 13, 2005.
Samsung Electonics Co. Ltd.; "Uplink Multiple Access and Multiplexing for Evolved UTRA", R1-050439, May 3, 2005, pp. 1-22, XP55018616, Retrieved from the Internet: URL:http://www.3gpp.org/ftp/tsg_ran/WG1_R1/TSGR1/DOCS/ [retrieved on Jul. 2, 2012].
Tomcik J., "QFDD and QTDD: Proposed Draft Air Interface Specification," IEEE C802.20-05/69, IEEE 802.20 Working Group on Mobile Broadband Wireless Access, Oct. 28, 2005, P.1-6,1-7,1-16,6-65,7-11,7-33,7-37~7-55,9-21,9-22,9-24~9-32.
Digital cellular telecommunications system (Phase 2+); General Packet Radio Service (GPRS); Mobile Station (MS)-Base Station System (BSS)interface; Radio Link Control/Medium Access Control (RLC/MAC) protocol (GSM 04.60 version 8.4.1 Release 1999), 3GPP Standard; ETSI EN 301 349, 3rd Generation Partnership Project (3GPP), Mobile Competence Centre; 650, Route Des Lucioles; F-06921 Sophia-Antipolis Cedex; France, No. V8.4.1, Oct. 1, 2000, pp. 1-243, XP050358534.
Institute for Infocom Research et al., "Intra-Node B Macro Diversity based on Cyclic Delay Transmissions", 3GPP TSG RAN WG1 #42 on LTE, R1-050795, Aug. 29-Sep. 2, 2005, pp. 1-5.
Sommer D., et al., "Coherent OFDM transmission at 60 GHz", Vehicular Technology Conference, 1999, VTC 1999—Fall, IEEE VTS 50th Amsterdam, Netherlands Sep. 19-22, 1999, Piscataway, NJ, USA, IEEE, US, vol. 3, Sep. 19, 1999, pp. 1545-1549, XP010353233, DOI: 10.1109/VETECF.1999.801553, ISBN: 978-0-7803-5435-7.
Zhang H., "A new space-time-frequency MIMO-OFDM scheme with cyclic delay diversity", Frontiers of Mobile and Wireless Communication, 2004. Proceedings of the IEEE 6th Circuits and Systems Symposium on vol. 2, Jun. 2, 2004, pp. 647 to 650.

* cited by examiner

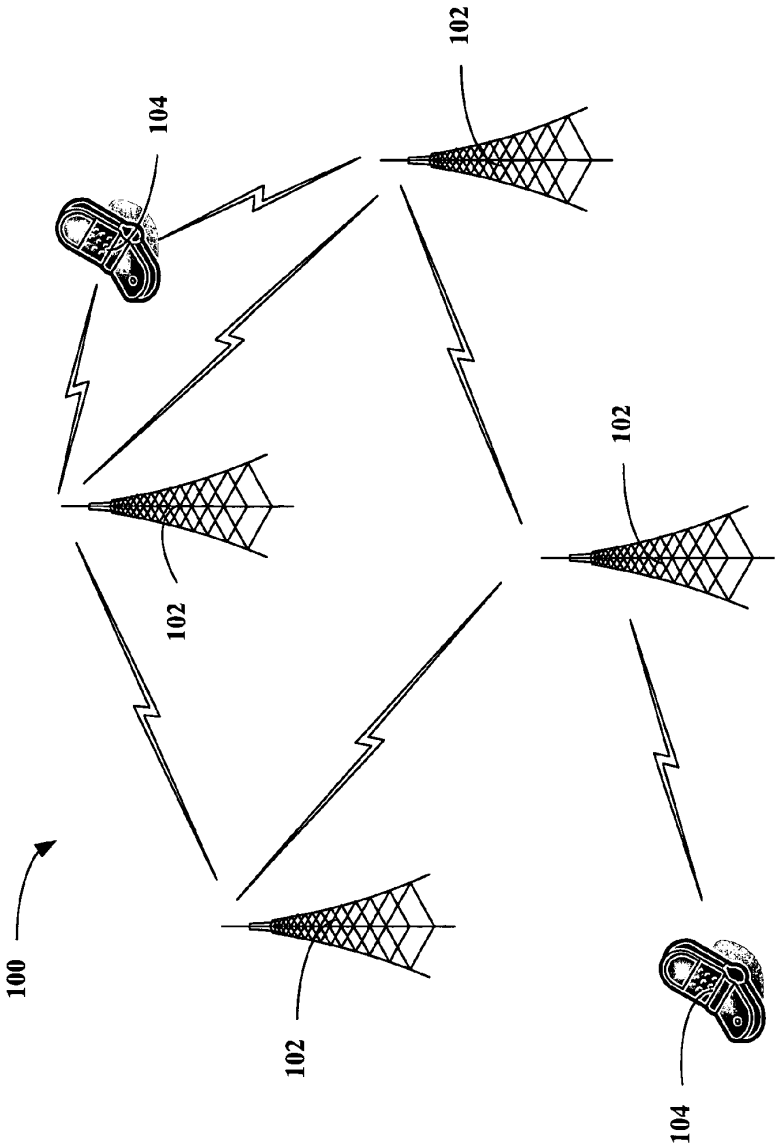

FIG. 1

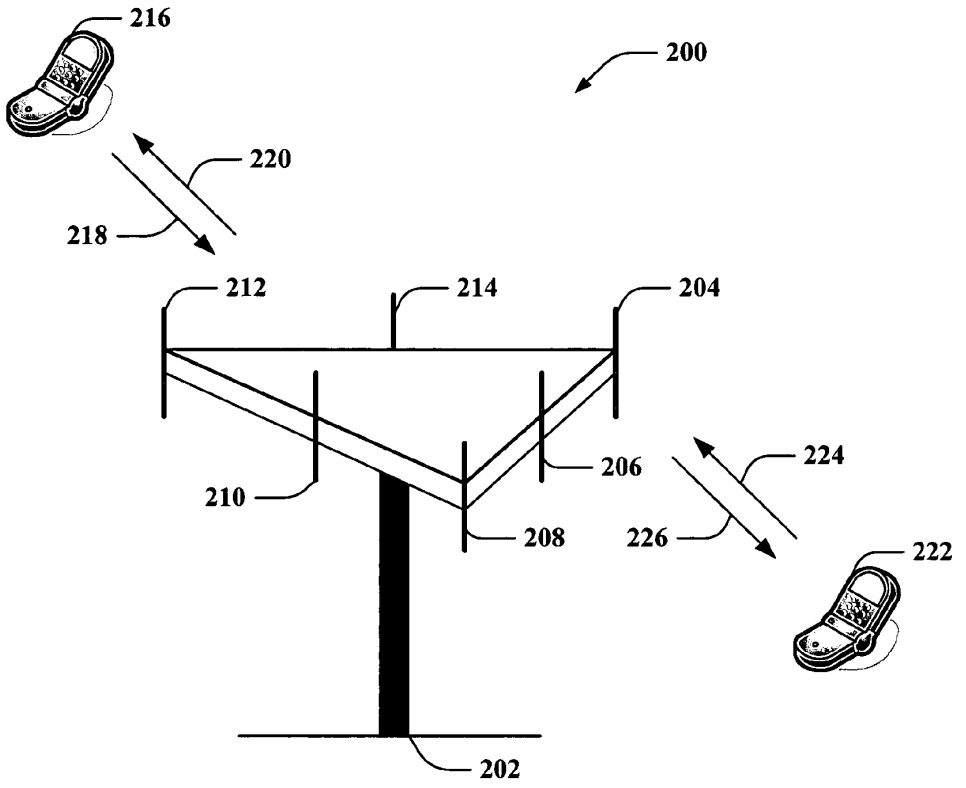

FIG. 2

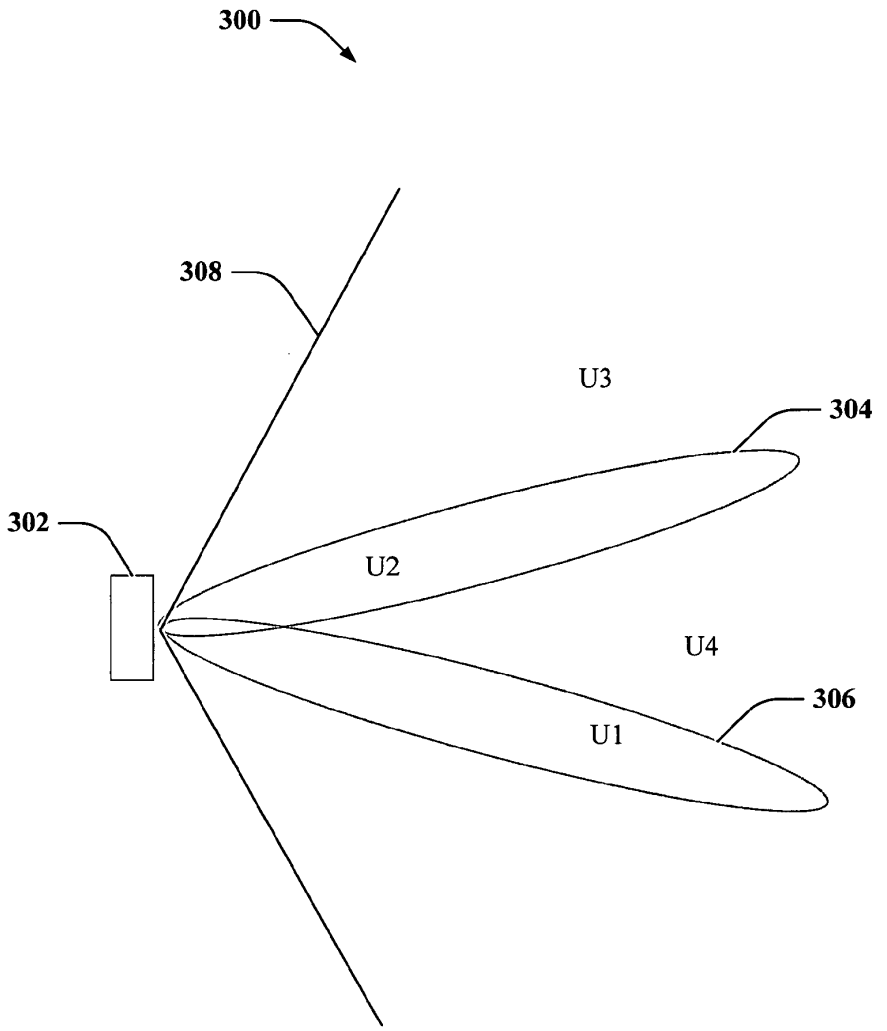

FIG. 3

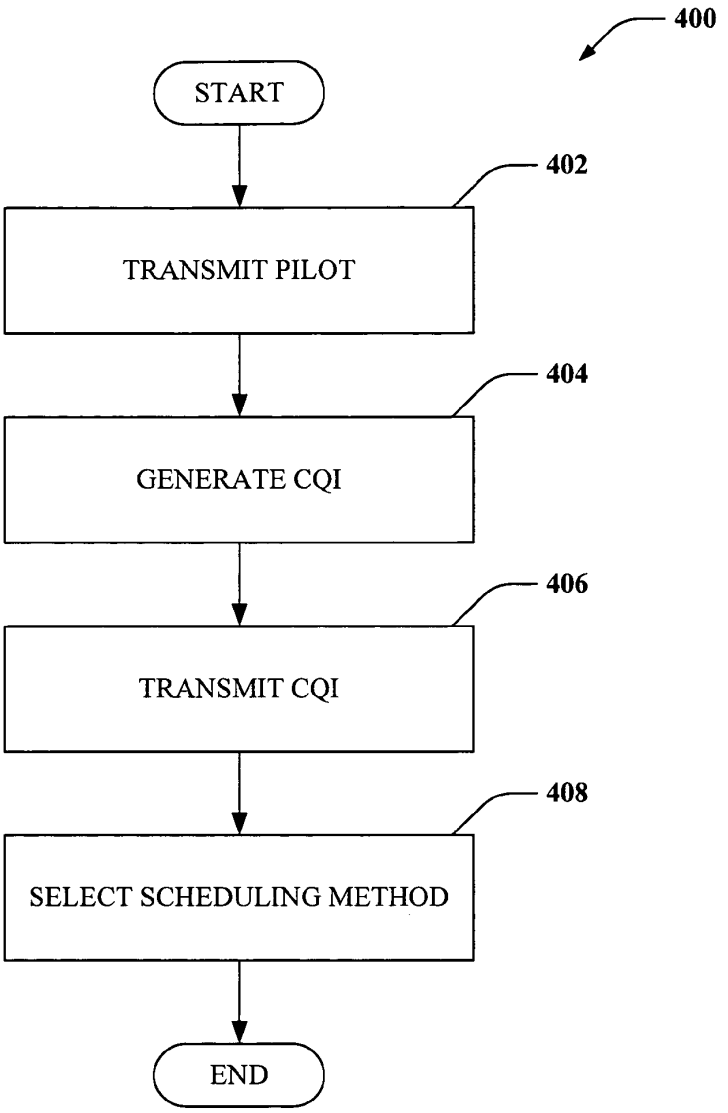
400
START
402
TRANSMIT PILOT
404
GENERATE CQI
406
TRANSMIT CQI
408
SELECT SCHEDULING METHOD
END

FIG. 4

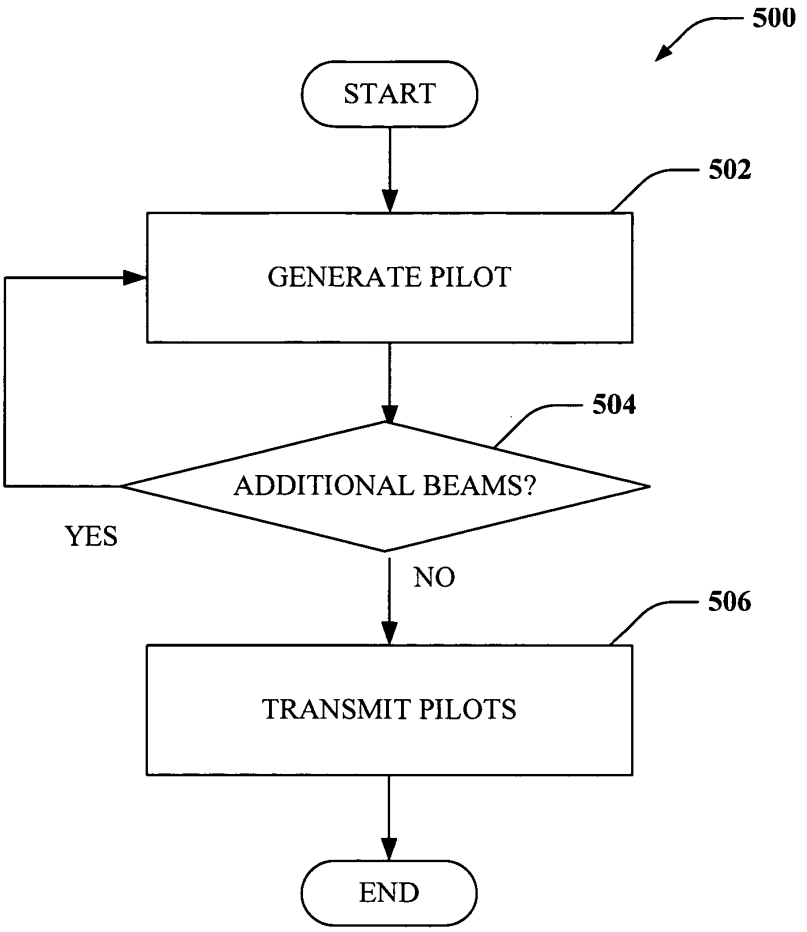
500
START
502
GENERATE PILOT
504
ADDITIONAL BEAMS?
YES
NO
506
TRANSMIT PILOTS
END

FIG. 5

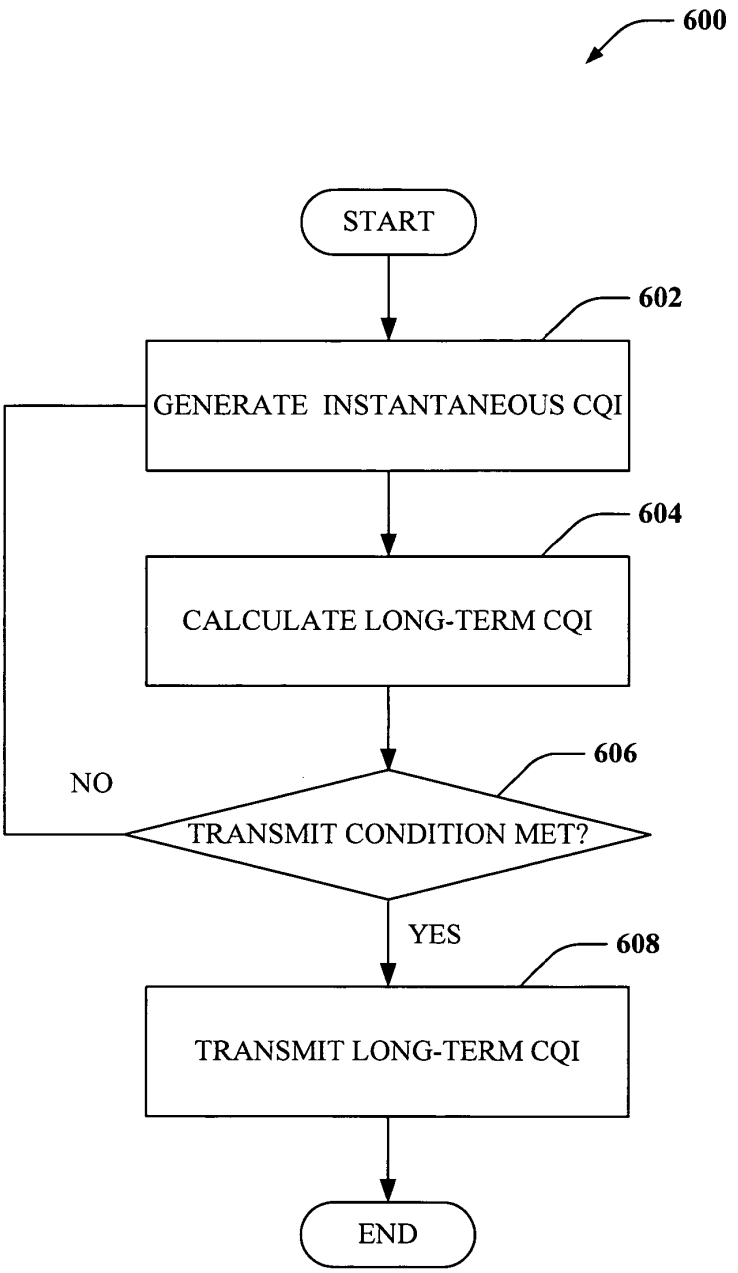
600
START
602
GENERATE INSTANTANEOUS CQI
604
CALCULATE LONG-TERM CQI
606
NO
TRANSMIT CONDITION MET?
YES
608
TRANSMIT LONG-TERM CQI
END

FIG. 6

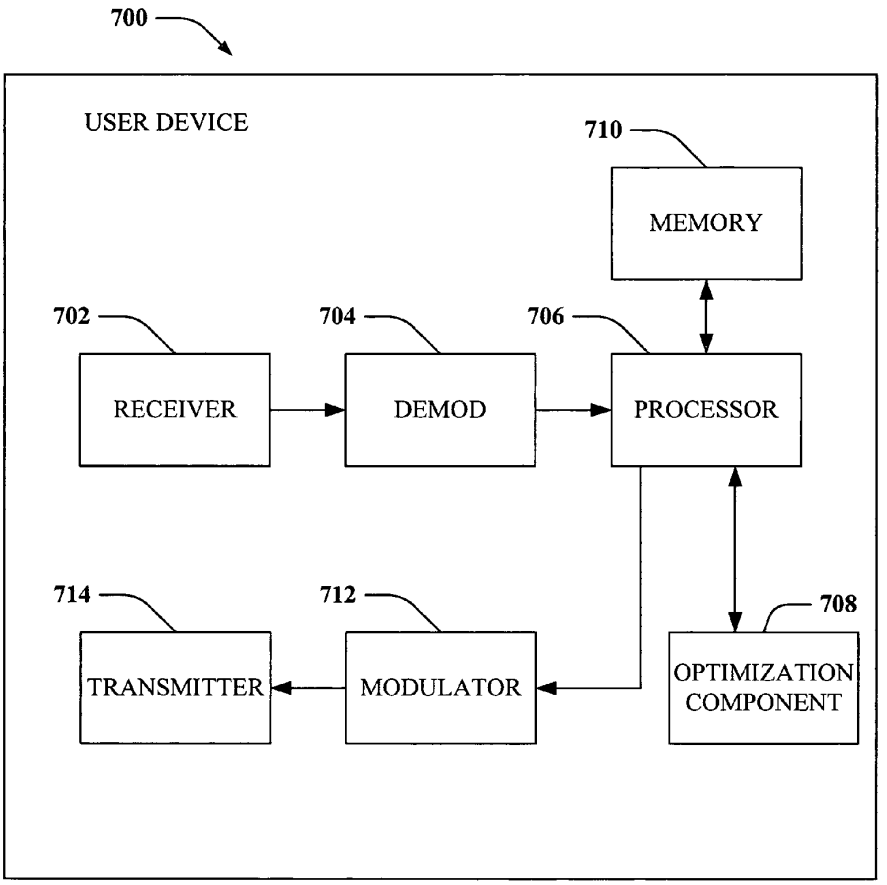
700
USER DEVICE
710
MEMORY
702
704
706
RECEIVER
DEMOD
PROCESSOR
714
712
708
TRANSMITTER
MODULATOR
OPTIMIZATION COMPONENT

FIG. 7

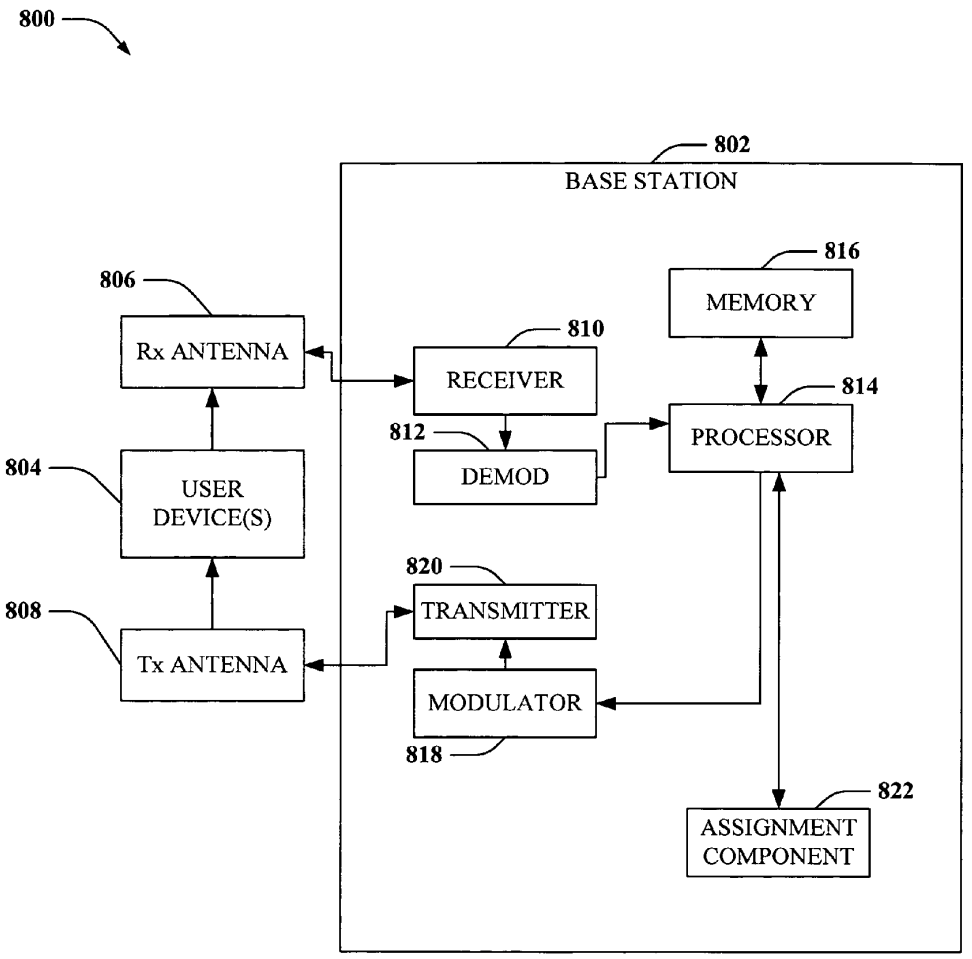
800
802
BASE STATION
816
MEMORY
806
Rx ANTENNA
810
RECEIVER
814
PROCESSOR
812
DEMOD
804
USER DEVICE(S)
820
TRANSMITTER
808
Tx ANTENNA
MODULATOR
818
822
ASSIGNMENT COMPONENT

FIG. 8

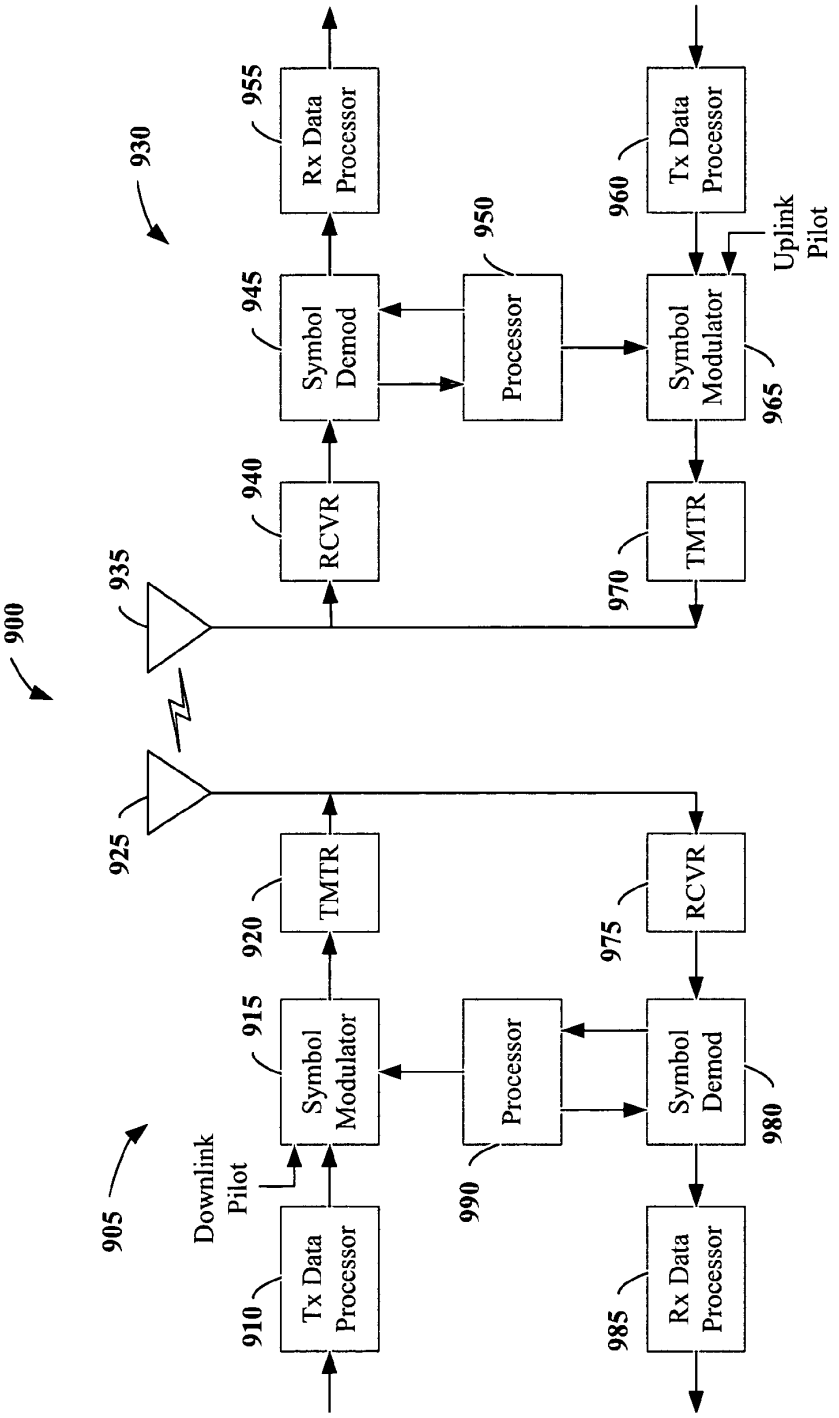
900
905
910
Tx Data Processor
Downlink Pilot
915
Symbol Modulator
920
TMTR
925
935
930
940
RCVR
945
Symbol Demod
955
Rx Data Processor
950
Processor
990
Processor
960
Tx Data Processor
Uplink Pilot
965
Symbol Modulator
970
TMTR
975
RCVR
980
Symbol Demod
985
Rx Data Processor

FIG. 9

CHANNEL QUALITY REPORTING FOR ADAPTIVE SECTORIZATION

CLAIM OF PRIORITY UNDER 35 U.S.C. §119

The present Application for Patent claims priority to Provisional Application Nos. 60/672,575 entitled "CHANNEL QUALITY REPORTING FOR ADAPTIVE SECTORIZATION IN WIRELESS COMMUNICATION SYSTEMS" filed Apr. 19, 2005, and 60/710,419 filed Aug. 22, 2005 which are assigned to the assignee hereof and hereby expressly incorporated by reference herein.

BACKGROUND

Reference to Co-pending Applications for Patent

The present Application for Patent is related to the following co-pending U.S. Patent Applications:

"ADAPTIVE SECTORIZATION IN CELLULAR SYSTEMS", filed concurrently herewith, assigned to the assignee hereof, and expressly incorporated by reference herein; and

"Beam-Space Precoding For Sdma Wireless Communication Systems", filed concurrently herewith, assigned to the assignee hereof, and expressly incorporated by reference herein. "SDMA Resource Management", filed concurrently herewith, assigned to the assignee hereof, and expressly incorporated by reference herein; and

"Mobile Wireless Access System", filed concurrently herewith, assigned to the assignee hereof, and expressly incorporated by reference herein.

BACKGROUND

I. Field

The following description relates generally to wireless communications, and, amongst other things, to communication schemes for wireless communication systems.

II. Background

Wireless networking systems have become a prevalent means by which a majority of people worldwide has come to communicate. Wireless communication devices have become smaller and more powerful in order to meet consumer needs and to improve portability and convenience. Consumers have found many uses for wireless communication devices such as cellular telephones, personal digital assistants (PDAs) and the like, demanding reliable service and expanded areas of coverage.

A typical wireless communication network (e.g., employing frequency, time, and code division techniques) includes one or more base stations that provide a coverage area and one or more mobile (e.g., wireless) user devices that can transmit and receive data within the coverage area. A typical base station can simultaneously transmit multiple data streams for broadcast, multicast, and/or unicast services, wherein a data stream is a stream of data that can be of independent reception interest to a user device. A user device within the coverage area of that base station can be interested in receiving one, more than one or all the data streams carried by the composite stream. Likewise, a user device can transmit data to the base station or another user device. Such communication between base station and user device or between user devices can be degraded due to channel variations and/or interference power variations. For example, the aforementioned variations can affect base station scheduling, power control and/or rate prediction for one or more user devices.

Performance for a wireless communication system may be enhanced by using beamformed transmissions to communicate from the base station to the mobile devices. Multiple transmit antennas located at a base station can be used to form beamformed transmissions. Beamformed transmissions, also referred to as beams, typically cover a narrower area than transmissions using a single transmit antenna. A beam can be considered a virtual sector allowing a virtual six-sector system to be generated from a conventional three-sector system. However, the signal to interference and noise ratio (SINR) is enhanced within the area covered by the beams. The communication system can utilize a fixed or predetermined set of beams. Although the fixed beam pattern can be updated or adapted, in contrast to a beam steering system, the beams in a fixed beam system are not dynamically updated based on individual user devices.

Typically, user devices should be assigned to appropriate beams to optimize channel performance. In addition, the beamforming system can utilize a variety of scheduling techniques based upon spatial, frequency or time divisions. The system should select the technique or combination of techniques to optimize channel performance, and consequently system performance. Thus, there exists a need in the art for a system and/or methodology for monitoring channel quality to optimize selection of beams and transmission techniques.

SUMMARY

The following presents a simplified summary of one or more embodiments in order to provide a basic understanding of such embodiments. This summary is not an extensive overview of all contemplated embodiments, and is intended to neither identify key or critical elements of all embodiments nor delineate the scope of any or all embodiments. Its sole purpose is to present some concepts of one or more embodiments in a simplified form as a prelude to the more detailed description that is presented later.

In accordance with one or more embodiments and corresponding disclosure thereof, various aspects are described in connection with enhancing performance in a wireless communication system using beamforming transmissions. According to one aspect, the channel quality is monitored. Channel quality indicators can be used to select a scheduling technique, such as space division multiplexing (SDM), multiple-input multiple output (MIMO) transmission and opportunistic beamforming for one or more user devices. In addition, the CQI can be used to determine the appropriate beam assignment or to update the beam pattern.

To that end, a method for enhancing performance for a wireless communication environment is described herein. The method can include generating a first pilot, transmitting the first pilot and receiving at least one channel quality indicator (CQI) based at least in part upon the first pilot. The method can also comprise scheduling at least one user device based at least in part upon the at least one CQI. Additionally, the method can comprise assigning a user device to a beam based upon the at least one CQI. The method can also comprise generating a second pilot, transmitting the second pilot on a second beam and receiving a second CQI based at least in part upon the second pilot. Moreover, the method can comprise receiving a pilot, determining a CQI based at least in part upon the pilot and transmitting the CQI to a base station.

According to yet another aspect, an apparatus for wireless communication can comprise a processor configured to generate a first pilot, transmit the first pilot and receive at least one CQI based at least in part upon the first pilot and a memory coupled with the processor. The processor can also be con-

figured to schedule at least one user device based at least in part upon the at least one CQI. Additionally, an apparatus can comprise a processor configured to receive a pilot, determine at least one CQI based at least in part upon the pilot and transmit the CQI to a base station.

According to another aspect, an apparatus for enhancing performance for a wireless communication environment can comprise a means for generating a first pilot, a means for transmitting the first pilot and a means for receiving at least one channel quality indicator (CQI) based at least in part upon the first pilot. The apparatus can also comprise a means for generating a second pilot, a means for transmitting the second pilot on a second beam and means for receiving a second CQI based at least in part upon the second pilot.

Yet another aspect relates to a computer-readable medium having stored thereon computer-executable instructions for generating a first pilot, transmitting the first pilot, receiving at least one channel quality indicator (CQI) based at least in part upon the first pilot and scheduling at least one user device based at least in part upon the at least one CQI. In addition, the instructions can comprise generating a second pilot, transmitting the second pilot on a second beam and receiving a second CQI based at least in part upon the second pilot.

Yet another aspect relates to a processor that executes instructions for enhancing performance for a wireless communication environment, the instructions can comprise generating a first pilot, transmitting the first pilot, receiving at least one channel quality indicator (CQI) based at least in part upon the first pilot and scheduling at least one user device based at least in part upon the at least one CQI. Additionally, the instructions can comprise generating a second pilot, transmitting the second pilot on a second beam and receiving a second CQI based at least in part upon the second pilot.

A further aspect sets forth a mobile device that can comprise a component that generates a first pilot, a component that transmits the first pilot and a component that receives at least one channel quality indicator (CQI) based at least in part upon the first pilot. Moreover, the mobile device is at least one of a cellular phone, a smartphone, a handheld communication device, a handheld computing device, a satellite radio, a global positioning system, a laptop, and a PDA.

To the accomplishment of the foregoing and related ends, the one or more embodiments comprise the features hereinafter fully described and particularly pointed out in the claims. The following description and the annexed drawings set forth in detail certain illustrative aspects of the one or more embodiments. These aspects are indicative, however, of but a few of the various ways in which the principles of various embodiments may be employed and the described embodiments are intended to include all such aspects and their equivalents.

BRIEF DESCRIPTION OF THE DRAWINGS.

FIG. **1** is an illustration of a wireless communication system according to one or more aspects presented herein.

FIG. **2** is an illustration of a wireless communication system according to one or more aspects presented herein.

FIG. **3** illustrates a beam pattern for a wireless communication system in accordance with various aspects presented herein.

FIG. **4** illustrates a methodology for monitoring channel quality in accordance with one or more aspects presented herein.

FIG. **5** illustrates a methodology using a dedicated pilot to monitor channel quality in accordance with one or more aspects presented herein.

FIG. **6** illustrates a methodology for monitoring channel quality using a long term CQI in accordance with one or more aspects presented herein.

FIG. **7** is an illustration of a system that monitors channel quality to improve performance in a wireless communication environment in accordance with various aspects presented herein.

FIG. **8** is an illustration of a system that monitors channel quality to improve performance in a wireless communication environment in accordance with various aspects presented herein.

FIG. **9** is an illustration of a wireless communication environment that can be employed in conjunction with the various systems and methods described herein.

DETAILED DESCRIPTION

Various embodiments are now described with reference to the drawings, wherein like reference numerals are used to refer to like elements throughout. In the following description, for purposes of explanation, numerous specific details are set forth in order to provide a thorough understanding of one or more embodiments. It may be evident, however, that such embodiment(s) may be practiced without these specific details. In other instances, well-known structures and devices are shown in block diagram form in order to facilitate describing one or more embodiments.

Furthermore, various embodiments are described herein in connection with a user device. A user device can also be called a system, a subscriber unit, subscriber station, mobile station, mobile device, remote station, access point, base station, remote terminal, access terminal, user terminal, terminal, user agent, or user equipment (UE). A user device can be a cellular telephone, a cordless telephone, a Session Initiation Protocol (SIP) phone, a wireless local loop (WLL) station, a PDA, a handheld communications or computing device having wireless connection capability, a smartphone, a satellite radio, a global position system, a laptop, or other processing device connected to a wireless modem.

Moreover, various aspects or features described herein may be implemented as a method, apparatus, or article of manufacture using standard programming and/or engineering techniques. The term "article of manufacture" as used herein is intended to encompass a computer program accessible from any computer-readable device, carrier, or media. For example, computer readable media can include but are not limited to magnetic storage devices (e.g., hard disk, floppy disk, magnetic strips . . .), optical disks (e.g., compact disk (CD), digital versatile disk (DVD) . . .), smart cards, and flash memory devices (e.g., card, stick, key drive . . .).

While the disclosure discusses beamforming as a mode of operation, the disclosure and its contents may substantially be applied to precoded or beam-steered transmissions. This may be performed by, for example, utilizing fixed or predetermined matrices or vectors for which a user is scheduled.

Referring now to FIG. **1**, a wireless communication system **100** in accordance with various embodiments presented herein is illustrated. System **100** can comprise one or more base stations **102** in one or more sectors that receive, transmit, repeat, etc., wireless communication signals to each other and/or to one or more mobile devices **104**. Each base station **102** can comprise multiple transmitter chains and receiver chains, e.g. one for each transmit and receive antenna, each of which can in turn comprise a plurality of components associated with signal transmission and reception (e.g., processors, modulators, multiplexers, demodulators, demultiplexers, antennas, etc.). Mobile devices **104** can be, for example,

cellular phones, smart phones, laptops, handheld communication devices, handheld computing devices, satellite radios, global positioning systems, PDAs, and/or any other suitable device for communicating over wireless system **100**. In addition, each mobile device **104** can comprise one or more transmitter chains and a receiver chains, such as used for a multiple input multiple output (MIMO) system. Each transmitter and receiver chain can comprise a plurality of components associated with signal transmission and reception (e.g., processors, modulators, multiplexers, demodulators, demultiplexers, antennas, etc.), as will be appreciated by one skilled in the art.

Referring now to FIG. **2**, a multiple access wireless communication system **200** according to one or more embodiments is illustrated. A 3-sector base station **202** includes multiple antenna groups, one including antennas **204** and **206**, another including antennas **208** and **210**, and a third including antennas **212** and **214**. According to the figure, only two antennas are shown for each antenna group, however, more or fewer antennas may be utilized for each antenna group. Typically, beamforming techniques require multiple transmit antennas to transmit beams. Mobile device **216** is in communication with antennas **212** and **214**, where antennas **212** and **214** transmit information to mobile device **216** over forward link **220** and receive information from mobile device **216** over reverse link **218**. Forward link (or downlink) refers to the communication link from the base stations to mobile devices, and the reverse link (or uplink) refers to the communication link from mobile devices to the base stations. Mobile device **222** is in communication with antennas **204** and **206**, where antennas **204** and **206** transmit information to mobile device **222** over forward link **226** and receive information from mobile device **222** over reverse link **224**.

Each group of antennas and/or the area in which they are designated to communicate may be referred to as a sector of base station **202**. In one or more embodiments, antenna groups each are designed to communicate to mobile devices in a sector or the areas covered by base station **202**. A base station may be a fixed station used for communicating with the terminals and may also be referred to as an access point, a Node B, or some other terminology.

A wireless communication system can include one or more base stations in contact with one or more user devices. Each base station provides coverage for a plurality of sectors. In communication with a user device, the transmitting antennas of a base station can utilize beam-forming techniques in order to improve the signal-to-noise ratio of forward links for the different mobile devices. Additionally, a base station using beamforming to transmit to mobile devices scattered randomly through its coverage area can cause less interference to mobile devices in neighboring cells/sectors than a base station transmitting through a single antenna to all mobile devices in its coverage area. Generally, beams generated by multiple transmit antennas are narrower than the coverage area of a single antenna. While user devices in the areas covered by beams experience an enhanced SINR, user devices within the null region experience a low SINR, possibly leading to loss of data. In general, user devices in the null region are worse off than if a single transmit antenna had been utilized to transmit data. In addition, if a user device located within a beam selects the wrong beam for communications, the user device will experience the same decrease in performance as user devices located in the null region.

FIG. **3** illustrates a beam pattern **300** for use in a wireless communication system in accordance with one or more embodiments presented herein. Base station transmit antennas can generate beams covering predetermined areas, resulting in a fixed beam pattern. The beam pattern can be adjusted periodically or adjustment of the pattern can be event driven. For example, the beam pattern can be modified based upon patterns of communication between the user devices and the base station. In the beam pattern illustrated in FIG. **3**, multiple antennas at a base station **302** emit a first fixed beam **304** and a second fixed beam **306** for a sector **308**. The number of beams shown has been limited to two for the sake of simplicity; however, multiple, additional fixed beams may be generated. Beams may be generally orthogonal as shown in FIG. **3** or the coverage area of the beams may overlap. Users U**1** and U**2** are located within the coverage area of beams **306** and **304**, respectively. Consequently, Users U**1** and U**2** experience an enhanced SINR, similar to the benefits experienced by users in a beam-steering system. In contrast, Users U**3** and U**4** will experience an extremely low SNR since they are located within the null region of the beams **306** and **304**. In fact, the performance for users U**3** and U**4** may be worse than if a single transmit antenna had been utilized. In addition, user devices may experience reduced SINR if the user device selects the wrong beam. For example, user device U**1** is located within the coverage are of second beam **306**. However, if user device U**1** were to incorrectly elect transmissions over first beam **304** or if the user device U**1** is assigned to first beam **304** by the base station, the user device will experience the same performance as if the user device was located in the null region.

Beamforming techniques can be used to provide fixed transmit directions in sectors or may be used in lieu of sectors. For example, beam patterns may provide multiple transmit directions in the sectors of a 3-sector base station, resulting in a virtual 6-sector base station. This ability to subdivide sectors when combined with various scheduling techniques results in increased system capacity.

Beamformed transmissions may be used with a number of different scheduling schemes, including space division multiplexing (SDM). SDM is a technique used in a multiple antenna communication system that utilizes the spatial dimensions to support additional user devices for data transmissions. In a space division multiple access system (SDMA) system, the base station can use the same frequencies to transmit to multiple user devices at the same time where the user devices are assigned to separate beams.

The multiple input multiple output (MIMO) and opportunistic beamforming scheduling techniques can be used with fixed beamforming patterns. In particular, user devices with well-conditioned matrix channels can be scheduled using MIMO. In a MIMO system, multiple data streams corresponding to a single user device are scheduled at the same time and frequency on multiple beams, thereby increasing the data rate. In contrast, in opportunistic beamforming, also referred to as beam selection, the base station transmits to a single user device over a given set of frequencies and time using a single beam. No other beams are used for transmission to any other user over those frequencies and at those times.

SDM, MIMO and opportunistic beamforming can be used with frequency division systems such as an orthogonal frequency division multiple access (OFDMA) system. An OFDMA system partitions the overall system bandwidth into multiple orthogonal subbands. These subbands are also referred to as tones, carriers, subcarriers, bins, and/or frequency channels. Each subband is associated with a subcarrier that can be modulated with data. An OFDMA system may use time and/or frequency division multiplexing to achieve orthogonality among multiple data transmissions for multiple user devices. Groups of user devices can be allocated separate

subbands, and the data transmission for each user device may be sent on the subband(s) allocated to this user device. SDMA, MIMO and opportunistic beamforming can be implemented for user device allocated to different frequency regions.

In a beamformed transmission system, beamforming techniques can be utilized to provide fixed transmit directions in sectors or may be used in lieu of sectors. For example, beam patterns may provide multiple transmit directions in the sectors of a 3-sector base station, resulting in a virtual 6-sector base station. This ability to subdivide sectors results in increased system capacity. User devices served by a base station sector can indicate a preference for a given beam. The base station may schedule transmission with the user device on the given beam using SDM, MIMO, opportunistic beamforming or any other scheduling method. In addition, beamforming with a fixed beam pattern allows a base station to utilize SDM, MIMO and opportunistic beamforming scheduling techniques simultaneously. For example, spatially orthogonal user devices may be scheduled using SDM, user devices with well-conditioned matrix channels could be scheduled using MIMO and additional users could be scheduled using opportunistic beamforming. It should be noted that in the case of precoding or beam steering, the directions shown may be one direction or the dominant direction of the beam.

Referring to FIGS. **4-7**, methodologies relating to increasing performance and capacity in wireless communication systems are illustrated. For example, methodologies can relate to using beamforming and channel quality monitoring in an SDMA environment, in an FDMA environment, an OFDMA environment, a CDMA environment, a WCDMA environment, a TDMA environment or any other suitable wireless environment. While, for purposes of simplicity of explanation, the methodologies are shown and described as a series of acts, it is to be understood and appreciated that the methodologies are not limited by the order of acts, as some acts may, in accordance with one or more embodiments, occur in different orders and/or concurrently with other acts from that shown and described herein. For example, those skilled in the art will understand and appreciate that a methodology could alternatively be represented as a series of interrelated states or events, such as in a state diagram. Moreover, not all illustrated acts may be utilized to implement a methodology in accordance with one or more embodiments.

Referring now to FIG. **4**, a methodology **400** for monitoring channel quality in accordance with one or more aspects is illustrated. At **402**, a pilot can be transmitted to the user devices. A pilot, as used herein is a signal, generally transmitted over a communication system and can be used for control, synchronization or reference purposes. A channel quality indicator (CQI) can be determined or estimated based upon the received pilot at **404**. Typically, a CQI can be a quantity such as the SINR for the channel or the supportable rate over the channel. After the CQI is determined, it can be communicated to the base station at **406**. At **408**, the CQI can be used to determine scheduling technique and/or the beam assignment for one or more user devices. Using CQI in scheduling and assignment determination can optimize individual channel and overall system performance.

Referring now to FIG. **5**, a methodology **500** for transmitting a dedicated pilot in accordance with one or more aspects is illustrated. In a dedicated pilot system, the base station transmits a separate pilot for each beam in the sector. Use of dedicated beams allows the CQI for each beam to be determined. At **502**, a pilot is generated for a particular beam. At **504**, it is determined whether there are additional beams within the sector. If yes, the method returns to **502** to generate a pilot for the next beam. If no, all of the pilots can be transmitted on their respective beams at **506**. Alternatively, all pilots can be calculated and transmitted one at a time. In one or more aspects, the pilots can be stored in a lookup table. The pilots can be read from the lookup table prior to transmission on the beams, as opposed to generating the pilots each time the pilots are to be transmitted. The pilots can be recalculated and the lookup table updated periodically or recalculation and update of the table can be event driven. For example, pilots can be updated based upon changes to the beam pattern.

Transmitting the pilot to the user devices provides the user devices with the data necessary to determine a CQI per beam or virtual sector. The pilots allow broadband channel measurements to be made. The pilot can also be used to reconstruct the channel when beams are used simultaneously. For example, when the SDMA scheduling technique is used, the pilot allows the channel to be reconstructed and the SDMA CQI to be computed. Using dedicated pilots can be particularly effective when the number of beams is less than the number of transmit antennas in the sector.

In one or more aspects, a common pilot can be used to determine CQIs. A common pilot is transmitted on every transmit antenna for the sector. The transmit antennas can be trained in several directions. The user devices can reconstruct the beams based upon a set of beam weights. Use of a common pilot is particularly useful when there are more beams in the beam pattern than available transmit antennas. For example, where there are three transmit antennas and eight beams in the sector, the antennas can be trained in three separate directions and the user devices can use a set of beam weights for each of the eight beams to reconstruct the beams. The user devices can receive the common pilot and estimate the broadband channel on each transmit antenna based upon the common pilot. The user devices can reconstruct the channels and interference and then calculate the CQI based upon the channel estimates and a set of beam weights for the appropriate beam. In one or more embodiments, beams are formed using a set of weights, that alter the phase, amplitude, or phase and amplitude of a particular transmission symbol or sample. These weights can be stored in a lookup table in memory. The beam pattern can be updated by modifying the weights stored in the lookup table. The beam weights can be stored in a lookup table for use in CQI calculations. The beams can be fixed or the base station can signal a set of beam weights to the user devices using the overhead channels. Use of the common pilot can be particularly effective when the beams either are fixed or change very slowly, such that the beam weights do not need to be updated frequently. If the beam pattern is updated, the base station should signal the user device and send/signal the updated set of beam weights. It should be understood that if the beam weights are known by the user device, they need not be transmitted to the user device.

User devices can utilize either common or dedicated pilot to estimate a beam selection, SDMA and/or MIMO CQI for the sector that services the user device. The beam selection, SDMA and MIMO CQIs can be compared to determine the optimal scheduling method for a user device. In addition, the user device can estimate the CQIs for beams from other sectors. The CQIs for beams from other sectors can be reported at a slower rate than the CQI for the sector that services the user device to reduce overhead. In addition, the user device can track the control channel CQI. In general, the control channel is transmitted on the beam with the largest area of coverage. The CQI for the control channel is particularly important for purposes such as power control.

In one or more aspects, the user device reports one or more CQIs to the base station. The base station can use the CQI feedback to determine the appropriate scheduling technique for the user devices. The user device can report CQIs within the signal, such that the base station receives CQIs continually. For example, the user device can report the CQI for all scheduling techniques within every frame or data packet transmitted to the base station. However, this may result in excessive overhead for the system. Alternatively, the user devices can send the CQI for the mode in which the user device is scheduled. For example, a user device scheduled using beam selection can transmit the beam selection CQI based upon the beam selection schedule; a user device using SDMA can transmit the SDMA CQI based on SDMA schedule and so forth. In addition, user devices can transmit using punctured coding. The control channel CQI can be punctured with some combination of the non-control channel CQIs.

Referring now to FIG. **6**, a methodology **600** for monitoring channel quality using a long term CQI in accordance with one or more aspects is illustrated. In one or more aspects, the system can utilize a long term CQI to select scheduling techniques and/or beam assignments for user devices. Using a long term CQI rather than an instantaneous CQI can prevent a user device from being switched between beams or scheduling techniques due to temporary fluctuations in the instantaneous CQI. At **602**, an instantaneous CQI is calculated. A long term CQI can be calculated based upon the instantaneous CQI, at **604**. The long term CQI can be calculated by averaging the instantaneous CQI with prior CQIs values. A table of prior CQI values and/or average of prior values can be stored and the values or average used to calculate the long term CQI. In addition, weighted averaging can be used to calculate the long term CQI. At **606**, it is determined whether the conditions have been met to report the long term CQI to the base station. If yes, the long term CQI is transmitted at **608**. If no, the next instantaneous CQI is calculated at **602**. The CQI can be reported periodically based upon a predetermined period of time or based upon the number of instantaneous CQIs calculated. Alternatively, transmission of the long term CQIs can be event driven. For example, the long term CQIs can be reported to the base station when the beam pattern changes, when a user device transitions from a region covered by one beam to a region covered by a second beam or when the CQI falls below a certain predetermined threshold. In addition, the user devices can report both long term and instantaneous CQIs to the base station.

User devices can be reassigned to beams or the entire beam pattern can be modified depending upon the CQI values. In general, user devices are capable of relocating or being relocated during voice or data transmission, and may move into or out of the coverage area provided by the beam to which they area assigned. User devices should be reassigned as they move through the sector from the coverage area of one beam to another. In addition, based upon the CQIs reported by multiple users, the base station can adjust the beam pattern to better service the group of user devices.

It will be appreciated that, in accordance with one or more embodiments described herein, inferences can be made regarding transmission formats, frequencies, etc. As used herein, the term to "infer" or "inference" refers generally to the process of reasoning about or inferring states of the system, environment, and/or user from a set of observations as captured through events and/or data. Inference can be employed to identify a specific context or action, or can generate a probability distribution over states, for example. The inference can be probabilistic—that is, the computation of a probability distribution over states of interest based on a consideration of data and events. Inference can also refer to techniques employed for composing higher-level events from a set of events and/or data. Such inference results in the construction of new events or actions from a set of observed events and/or stored event data, whether or not the events are correlated in close temporal proximity, and whether the events and data come from one or several event and data sources.

According to an example, one or methods presented above can include making inferences regarding the scheduling technique or beam assignment for one or more user devices. For example, it can be determined that the user device has left the region covered by a first beam and entered a region covered by a second beam and therefore, the user device should be reassigned to the second beam. In addition, it can be determined that the beam pattern is suboptimal for multiple user devices and the beam pattern can be modified.

According to another example, inferences can be made relating to the scheduling techniques to employ during various times of the day, week, etc., such as peak hours and the like. It will be appreciated that the foregoing examples are illustrative in nature and are not intended to limit the number of inferences that can be made or the manner in which such inferences are made in conjunction with the various embodiments and /or methods described herein.

FIG. **7** is an illustration of a system **700** that facilitates beamforming in a wireless communication environment to increase system capacity limits in accordance with one or more embodiments set forth herein. System **700** can reside in a base station and/or in a user device, as will be appreciated by one skilled in the art. System **700** comprises a receiver **702** that receives a signal and from, for instance one or more receive antennas, and performs typical actions thereon (e.g., filters, amplifies, downconverts, etc.) the received signal and digitizes the conditioned signal to obtain samples. A demodulator **704** can demodulate and provide received pilot symbols to a processor **706** for channel estimation.

Processor **706** can be a processor dedicated to analyzing information received by receiver component **702** and/or generating information for transmission by a transmitter **714**. Processor **706** can be a processor that controls one or more components of user device **700**, and/or a processor that analyzes information received by receiver **702**, generates information for transmission by a transmitter **714**, and controls one or more components of user device **700**. Processor **806** can utilize any of the methodologies described herein, including those described with respect to FIGS. **4-6**, to coordinate communications. In addition, user device **700** can include an optimization component **708** that coordinates beam assignments and/or selects scheduling techniques. Optimization component **708** may be incorporated into the processor **706**. It is to be appreciated that optimization component **708** can include optimization code that performs utility based analysis in connection with assigning user devices to beams and/or scheduling techniques. The optimization code can utilize artificial intelligence based methods in connection with performing inference and/or probabilistic determinations and/or statistical-based determinations in connection with optimizing user device beam assignments.

User device **700** can additionally comprise memory **710** that is operatively coupled to processor **706** and that can store information related to beam pattern information, CQI data, lookup tables comprising information related thereto, and any other suitable information related to beamforming and channel monitoring as described herein. Memory **710** can additionally store protocols associated with generating lookup tables, etc., such that user device **700** can employ stored

protocols and/or algorithms to increase system capacity and performance. It will be appreciated that the data store (e.g., memories) components described herein can be either volatile memory or nonvolatile memory, or can include both volatile and nonvolatile memory. By way of illustration, and not limitation, nonvolatile memory can include read only memory (ROM), programmable ROM (PROM), electrically programmable ROM (EPROM), electrically erasable ROM (EEPROM), or flash memory. Volatile memory can include random access memory (RAM), which acts as external cache memory. By way of illustration and not limitation, RAM is available in many forms such as synchronous RAM (SRAM), dynamic RAM (DRAM), synchronous DRAM (SDRAM), double data rate SDRAM (DDR SDRAM), enhanced SDRAM (ESDRAM), Synchlink DRAM (SLDRAM), and direct Rambus RAM (DRRAM). The memory **710** of the subject systems and methods is intended to comprise, without being limited to, these and any other suitable types of memory. The processor **706** is connected to a symbol modulator **712** and transmitter **714** that transmits the modulated signal.

FIG. **8** is an illustration of a system **800** that facilitates increasing system capacity or performance in a communication environment in accordance with various embodiments. System **800** comprises a base station **802** with a receiver **810** that receives signal(s) from one or more user devices **804** through one or more receive antennas **806**, and transmits to the one or more user devices **804** through a plurality of transmit antennas **808**. In one or more embodiments, receive antennas **806** and transmit antennas **808** can be implemented using a single set of antennas. Receiver **810** can receive information from receive antennas **806** and is operatively associated with a demodulator **812** that demodulates received information. Receiver **810** can be, for example, a Rake receiver (e.g., a technique that individually processes multi-path signal components using a plurality of baseband correlators, . . .), an MMSE-based receiver, or some other suitable receiver for separating out user devices assigned thereto, as will be appreciated by one skilled in the art. According to various aspects, multiple receivers can be employed (e.g., one per receive antenna), and such receivers can communicate with each other to provide improved estimates of user data. Demodulated symbols are analyzed by a processor **814** that is similar to the processor described above with regard to FIG. **7**, and is coupled to a memory **816** that stores information related to user device assignments, lookup tables related thereto and the like. Receiver output for each antenna can be jointly processed by receiver **810** and/or processor **814**. A modulator **818** can multiplex the signal for transmission by a transmitter **820** through transmit antennas **808** to user devices **804**.

Base station **802** further comprises an assignment component **822**, which can be a processor distinct from or integral to processor **814**, and which can evaluate a pool of all user devices in a sector served by base station **804** and can assign user devices to beams and/or scheduling techniques based at least in part upon the CQIs for the channel of the individual user devices.

FIG. **9** shows an exemplary wireless communication system **900**. The wireless communication system **900** depicts one base station and one user device for sake of brevity. However, it is to be appreciated that the system can include more than one base station and/or more than one user device, wherein additional base stations and/or user devices can be substantially similar or different from the exemplary base station and user device described below. In addition, it is to be appreciated that the base station and/or the user device can employ the systems (FIGS. **7-9**) and/or methods (FIGS. **4-6**) described herein to facilitate wireless communication there between.

Referring now to FIG. **9**, on a downlink, at access point **905**, a transmit (TX) data processor **910** receives, formats, codes, interleaves, and modulates (or symbol maps) traffic data and provides modulation symbols ("data symbols"). A symbol modulator **915** receives and processes the data symbols and pilot symbols and provides a stream of symbols. Symbol modulator **915** multiplexes data and pilot symbols and provides them to a transmitter unit (TMTR) **920**. Each transmit symbol may be a data symbol, a pilot symbol, or a signal value of zero. The pilot symbols may be sent continuously in each symbol period. The pilot symbols can be frequency division multiplexed (FDM), orthogonal frequency division multiplexed (OFDM), time division multiplexed (TDM), frequency division multiplexed (FDM), or code division multiplexed (CDM).

TMTR **920** receives and converts the stream of symbols into one or more analog signals and further conditions (e.g., amplifies, filters, and frequency upconverts) the analog signals to generate a downlink signal suitable for transmission over the wireless channel. The downlink signal is then transmitted through an antenna **925** to the user devices. At user device **930**, an antenna **935** receives the downlink signal and provides a received signal to a receiver unit (RCVR) **940**. Receiver unit **940** conditions (e.g., filters, amplifies, and frequency downconverts) the received signal and digitizes the conditioned signal to obtain samples. A symbol demodulator **945** demodulates and provides received pilot symbols to a processor **950** for channel estimation and CQI calculations. Symbol demodulator **945** further receives a frequency response estimate for the downlink from processor **950**, performs data demodulation on the received data symbols to obtain data symbol estimates (which are estimates of the transmitted data symbols), and provides the data symbol estimates to an RX data processor **955**, which demodulates (i.e., symbol demaps), deinterleaves, and decodes the data symbol estimates to recover the transmitted traffic data. The processing by symbol demodulator **945** and RX data processor **955** is complementary to the processing by symbol modulator **915** and TX data processor **910**, respectively, at access point **905**.

On the uplink, a TX data processor **960** processes traffic data and provides data symbols. The data symbols can include CQI data based upon the received pilot. A symbol modulator **965** receives and multiplexes the data symbols with pilot symbols, performs modulation, and provides a stream of symbols. A transmitter unit **970** then receives and processes the stream of symbols to generate an uplink signal, which is transmitted by the antenna **935** to the access point **905**.

At access point **905**, the uplink signal from user device **930** is received by the antenna **925** and processed by a receiver unit **975** to obtain samples. A symbol demodulator **980** then processes the samples and provides received pilot symbols and data symbol estimates for the uplink. An RX data processor **985** processes the data symbol estimates to recover the traffic data transmitted by user device **930**. A processor **990** performs channel estimation for each active user device transmitting on the uplink. Multiple user devices may transmit pilot concurrently on the uplink on their respective assigned sets of pilot subbands, where the pilot subband sets may be interlaced.

Processors **990** and **950** direct (e.g., control, coordinate, manage, etc.) operation at access point **905** and user device **930**, respectively. Respective processors **990** and **950** can be associated with memory units (not shown) that store program

codes and data. Processors **990** and **950** can utilize any of the methodologies described herein, including those illustrated in FIGS. **4-6** to select a scheduling technique or beam assignment for the user device **930**. Respective Processors **990** and **950** can also perform computations to derive frequency and impulse response estimates for the uplink and downlink, respectively.

For a multiple-access system (e.g., FDMA, OFDMA, CDMA, TDMA, SDMA, etc.), multiple user devices can transmit concurrently on the uplink. For such a system, the pilot subbands may be shared among different user devices. The channel estimation techniques may be used in cases where the pilot subbands for each user device span the entire operating band (possibly except for the band edges). Such a pilot subband structure would be desirable to obtain frequency diversity for each user device. The techniques described herein may be implemented by various means. For example, these techniques may be implemented in hardware, software, or a combination thereof. For a hardware implementation, the processing units used for channel estimation may be implemented within one or more application specific integrated circuits (ASICs), digital signal processors (DSPs), digital signal processing devices (DSPDs), programmable logic devices (PLDs), field programmable gate arrays (FPGAs), processors, controllers, micro-controllers, microprocessors, other electronic units designed to perform the functions described herein, or a combination thereof. With software, implementation can be through modules (e.g., procedures, functions, and so on) that perform the functions described herein. The software codes may be stored in memory unit and executed by the processors **990** and **950**.

For a software implementation, the techniques described herein may be implemented with modules (e.g., procedures, functions, and so on) that perform the functions described herein. The software codes may be stored in memory units and executed by processors. The memory unit may be implemented within the processor or external to the processor, in which case it can be communicatively coupled to the processor by various means as is known in the art.

What has been described above includes examples of one or more embodiments. It is, of course, not possible to describe every conceivable combination of components or methodologies for purposes of describing the aforementioned embodiments, but one of ordinary skill in the art may recognize that many further combinations and permutations of various embodiments are possible. Accordingly, the described embodiments are intended to embrace all such alterations, modifications and variations that fall within the spirit and scope of the appended claims. Furthermore, to the extent that the term "includes" is used in either the detailed description or the claims, such term is intended to be inclusive in a manner similar to the term "comprising" as "comprising" is interpreted when employed as a transitional word in a claim.

What is claimed is:

1. A method for enhancing performance for a wireless communication environment, comprising:

generating a first pilot;

transmitting the first pilot;

receiving first and second channel quality indicators (CQIs) based at least in part upon the first pilot;

scheduling a first user device based at least in part upon the first CQI, said scheduling being selected from a plurality of scheduling techniques including spatial division multiplexing (SDM) and (MIMO) and opportunistic beamforming scheduling techniques to schedule the first user device; and

scheduling a second user device based at least in part upon the second CQI with a scheduling technique different than that selected to schedule the first user device.

2. The method of claim **1**, further comprising assigning a user device to a beam based upon the at least one of the CQIs.

3. The method of claim **1**, further comprising using a signal to interference to noise ratio (SINR) as one or more of the CQIs.

4. The method of claim **1**, further comprising using a supportable rate over the channel as one or more of the CQIs.

5. The method of claim **1**, wherein the first pilot is transmitted on a first beam and further comprising: generating a second pilot; transmitting the second pilot on a second beam; and receiving a third CQI based at least in part upon the second pilot.

6. The method of claim **1**, wherein the first pilot is transmitted over an area including a plurality of beams.

7. The method of claim **6**, wherein at least one of the CQIs is based at least in part upon a set of beam weights.

8. The method of claim **7**, further comprising utilizing the set of beam weights.

9. The method of claim **1**, wherein at least one of the CQIs is received every frame.

10. The method of claim **1**, wherein at least one of the CQIs is received based upon at least one of spatial division multiplexing (SDM), multiple input multiple output (MIMO) and opportunistic beamforming scheduling.

11. The method of claim **1**, further comprising receiving a control channel CQI.

12. The method of claim **11**, wherein the first pilot is transmitted on an antenna.

13. The method of claim **1**, further comprising modifying a beam based at least in part upon the at least one of the CQIs.

14. A wireless communication apparatus comprising:

a processor configured to generate a first pilot, transmit the first pilot,

receive first and second channel quality indicators (CQIs) based at least in part upon the first pilot,

a first user device based at least in part upon the first CQI, said scheduling being selected from a plurality of scheduling techniques including spatial division multiplexing (SDM) and (MIMO) and opportunistic beamforming scheduling techniques to schedule the first user device, and

schedule a second user device based at least in part upon the second CQI with a scheduling technique different than that selected to schedule the first user device; and

a memory coupled with the processor.

15. The wireless apparatus of claim **14**, wherein the processor is configured to assign assigns a user device to a beam based upon the at least one CQI.

16. The wireless apparatus of claim **14**, wherein at least one of the CQIs is at least one of a signal to interference to noise ratio (SINR) and a supportable rate over the channel.

17. The wireless apparatus of claim **14**, wherein the processor is configured to generate a second pilot, transmit the second pilot and receive a third CQI based at least in part upon the second pilot.

18. The wireless apparatus of claim **14**, the processor is configured to transmit the first pilot over an area including a plurality of beams.

19. The wireless apparatus of claim **18**, wherein at least one of the CQIs is based at least in part upon a set of beam weights stored in the memory.

20. The wireless apparatus of claim **19**, wherein the processor is configured to utilize the set of beam weights.

21. The wireless apparatus of claim **14**, wherein the processor is configured to receive at least one of the CQIs in every frame.

22. The wireless apparatus of claim **14**, wherein the processor is configured to receive at least one of the CQIs based upon at least one of spatial division multiplexing (SDM), multiple input multiple output (MIMO) and opportunistic beamforming scheduling.

23. The wireless apparatus of claim **14**, wherein the processor is configured to receive a control channel CQI.

24. The wireless apparatus of claim **23**, wherein the processor is configured to transmit the first pilot through an antenna.

25. A wireless communication apparatus for enhancing performance for a wireless communication environment, comprising:

means for generating a first pilot;

means for transmitting the first pilot;

means for receiving first and second channel quality indicators (CQIs) based at least in part upon the first pilot;

means for scheduling a first user device based at least in part upon the first CQI, said scheduling being selected from a plurality of scheduling techniques including spatial division multiplexing (SDM) and (MIMO) and opportunistic beamforming scheduling techniques to schedule the first user device; and

means for scheduling a second user device based at least in part upon the second CQI with a scheduling technique different than that selected to schedule the first user device.

26. The apparatus of claim **25**, further comprising:

means for generating a second pilot;

means for transmitting the second pilot on a second beam; and

means for receiving a third CQI based at least in part upon the second pilot.

27. The apparatus of claim **25**, further comprising means for receiving a control channel CQI.

28. The apparatus of claim **25**, further comprising means for utilizing a set of beam weights, wherein at least one of the CQIs is based at least in part upon the set of beam weights.

29. The apparatus of claim **25**, further comprising means for modifying a beam based at least in part upon the at least one of the CQIs.

30. A non-transitory computer-readable medium having stored thereon computer-executable instructions for:

generating a first pilot;

transmitting the first pilot;

receiving first and second channel quality indicators (CQIs) based at least in part upon the first pilot;

scheduling a first user device based at least in part upon the first CQI, said scheduling being selected from a plurality of scheduling techniques including spatial division multiplexing (SDM) and (MIMO) and opportunistic beamforming scheduling techniques to schedule the first user device; and

scheduling a second user device based at least in part upon the second CQI with a scheduling technique different than that selected to schedule the first user device.

31. The computer-readable medium of claim **30**, further comprising instructions for assigning a user device to a beam based upon at least one of the CQIs.

32. The computer-readable medium of claim **30**, further comprising instructions for:

generating a second pilot;

transmitting the second pilot on a second beam; and

receiving a third CQI based at least in part upon the second pilot.

33. A processor that executes instructions for enhancing performance for a wireless communication environment, the instructions comprising:

generating a first pilot;

transmitting the first pilot;

receiving first and second channel quality indicators (CQIs) based at least in part upon the first pilot;

scheduling a first a user device based at least in part upon the first CQI, said scheduling being selected from a plurality of scheduling techniques including spatial division multiplexing (SDM) and (MIMO) and opportunistic beamforming scheduling techniques to schedule the first user device; and

scheduling a second user device based at least in part upon the second CQI with a scheduling technique different than that selected to schedule the first user device.

34. The processor of claim **33**, further comprising:

generating a second pilot;

transmitting the second pilot on a second beam; and

receiving a third CQI based at least in part upon the second pilot.

35. A mobile device that facilitates communicating over a wireless network, comprising:

a component that generates a first pilot;

a component that transmits the first pilot;

a component that receives first and second channel quality indicators (CQIs) based at least in part upon the first pilot; and

a component that schedules a first user device based at least in part upon the first CQI, said scheduling being selected from a plurality of scheduling techniques including spatial division multiplexing (SDM) and (MIMO) and opportunistic beamforming scheduling techniques to schedule the first user device; and

a component that schedules a second user device based at least in part upon the second CQI with a scheduling technique different than that selected to schedule the first user device.

36. The mobile device of claim **35**, wherein the device is at least one of a cellular phone, a smartphone, a handheld communication device, a handheld computing device, a satellite radio, a global positioning system, a laptop, and a PDA.

* * * * *