IEEE P802.11
Wireless LANs

Joint Proposal: High throughput extension to the 802.11 Standard: PHY

Date: 2006-01-13

Author(s):

Name	Company	Address	Phone	email
Sean Coffey	Realtek Semiconductor	16269 Laguna Canyon Rd, Suite 100 Irvine, CA 92121 USA	+1 415 572 6221	coffey@realtek-us.com
Assaf Kasher	Intel Corporation	Matam Industrial Park, POB 1659 Haifa, 31015, Israel	+972-4-8651547	assaf.kasher@intel.com
Adrian Stephens	Intel Corporation	15 JJ Thompson Avenue, Cambridge, CB3 0FD, United Kingdom	+44 1223 763457	adrian.p.stephens@intel.com

Abstract

This document contains the PHY layer parts of the 802.11 TGn Joint Proposal Technical Specification.

Notice: This document has been prepared to assist IEEE 802.11. It is offered as a basis for discussion and is not binding on the contributing individual(s) or organization(s). The material in this document is subject to change in form and content after further study. The contributor(s) reserve(s) the right to add, amend or withdraw material contained herein.

Release: The contributor grants a free, irrevocable license to the IEEE to incorporate material contained in this contribution, and any modifications thereof, in the creation of an IEEE Standards publication; to copyright in the IEEE's name any IEEE Standards publication even though it may include portions of this contribution; and at the IEEE's sole discretion to permit others to reproduce in whole or in part the resulting IEEE Standards publication. The contributor also acknowledges and accepts that this contribution may be made public by IEEE 802.11.

Patent Policy and Procedures: ***The contributor is familiar with the IEEE 802 Patent Policy and Procedures <Error! Hyperlink reference not valid.>, including the statement "IEEE standards may include the known use of patent(s), including patent applications, provided the IEEE receives assurance from the patent holder or applicant with respect to patents essential for compliance with both mandatory and optional portions of the standard." Early disclosure to the Working Group of patent information that might be relevant to the standard is essential to reduce the possibility for delays in the development process and increase the likelihood that the draft publication will be approved for publication. Please notify the Chair <stuart.kerry@philips.com> as early as possible, in written or electronic form, if patented technology (or technology under patent application) might be incorporated into a draft standard being developed within the IEEE 802.11 Working Group.*** *If you have questions, contact the IEEE Patent Committee Administrator at <patcom@ieee.org>*

1

Exhibit 1015
Ericsson Inc. v. Woodbury Wireless LLC
Page 000002

Additional Author(s):				
Name	**Company**	**Address**	**Phone**	**email**
Bill Abbott	TI			w-abbott@ti.com
Santosh Abraham	Qualcomm			sabraham@qualcomm.com
Tomoko Adachi	Toshiba			tomo.adachi@toshiba.co.jp
Dmitry Akhmetov	Intel			Dmitry.Akhmetov@intel.com
Tsuguhide Aoki	Toshiba			tsuguhide.aoki@toshiba.co.jp
Yusuke Asai	NTT			asai.yusuke@lab.ntt.co.jp
Geert Awater	Airgo			awater@airgonetworks.com
David Bagby	Sanyo			david.bagby@ieee.org
Gal Basson	Intel			gal.basson@intel.com
Anuj Batra	TI			batra@ti.com
John Benko	France Telecom			john.benko@francetelecom.com
Bjorn Bjerke	Qualcomm			bbjerke@qualcomm.com
Jerry Chang	Ralink			jerry_chang@ralinktech.com.tw
Jerry Chang	Realtek			jerrychang@realtek.com.tw
John Chang	Ralink			**john_chang@ralinktech.com.tw**
Jeng-Hong Chen	Winbond			jhchen2@winbond.com
Stephen Chen	Zydas			stephen@zydas.com.tw
Yi-Ming Chen	Winbond			ymchen0@winbond.com
Pei-ju Chiang	Realtek			pjchiang@realtek.com.tw
Emily Chou	Realtek			sychou@realtek.com.tw
Keith Chugg	Trellisware			kchugg@trellisware.com
Brian Classon	Motorola			Brian.Classon@motorola.com
Sean Coffey	Realtek			coffey@realtek-us.com
Gabriella Convertino	ST			Gabriella.Convertino@st.com
Marc de Courville	Motorola			marc.de.courville@motorola.com
Rolf De Vegt	Airgo			rolf@airgonetworks.com
Franz Dielacher	Infineon			franz.dielacher@infineon.com
Yoshiharu Doi	Sanyo			doi@gf.hm.rd.sanyo.co.jp
Takagi Eiji	Airgo			eijitakagi@airgonetworks.com
Leonid Epstein	Metalink			leonide@metalinkbb.com
Mustafa Eroz	HNS			meroz@hns.com
Stefan Fechtel	Infineon			stefan.fechtel@infineon.com
Paul Feinberg	Sony			Paul.Feinberg@am.sony.com
Guido Frederiks	Airgo			guido@airgonetworks.com
Takashi Fukagawa	Panasonic			fukagawa.takashi@jp.panasonic.com
Edoardo Gallizio	ST			edoardo.gallizio@st.com
James Gardner	Airgo			jamesgardner@airgonetworks.com
Monisha Ghosh	Philips			monisha.ghosh@philips.com
Jeremy Gosteau	Motorola			jeremy.gosteau@motorola.com
Sudheer Grandhi	InterDigital			sudheer.grandhi@interdigital.com
Paul Gray	Trellisware			pgray@trellisware.com
Daqing Gu	Mitsubishi			dgu@merl.com
Emre Gunduzhan	Nortel			egunduzh@nortel.com
Jin-Meng Ho	TI			jinmengho@ti.com
Dale Hocevar	TI			hocevar@ti.com
Muhammad Ikram	TI			mzi@ti.com

Exhibit 1015
Ericsson Inc. v. Woodbury Wireless LLC
Page 000003

Additional Author(s):				
Name	**Company**	**Address**	**Phone**	**email**
Yasuhiko Inoue	NTT			yinoue@ansl.ntt.co.jp
Kaz Ishida	Qualcomm			kishida@qualcomm.com
Takashi Ishidoshiro	Buffalo Inc.			doshir@melcoinc.co.jp
Lakshmi Iyer	HNS			liyer@hns.com
Eric Jacobson	Intel			eric.a.jacobsen@intel.com
Yuh-Ren Jauh	Zydas			yrjauh@zydas.com.tw
Taehyun Jeon	ETRI			thjeon@etri.re.kr
VK Jones	Airgo			vkjones@airgonetworks.com
Naveen Kakani	Nokia			naveen.kakani@nokia.com
Srinivas Kandala	Airgo			srini@airgonetworks.com
Assaf Kasher	Intel			assaf.kasher@intel.com
Masato Kato	Buffalo Inc.			mkato@melcoinc.co.jp
John Ketchum	Qualcomm			johnk@qualcomm.com
Pansop Kim	Winbond			pkim@winbond.com
Youngsoo Kim	Samsung			kimyoungsoo@samsung.com
Guenter Kleindl	Siemens AG			guenter.kleindl@siemens.com
Kiyotaka Kobayashi	Panasonic			kobayashi.kiyotaka@jp.panasonic.com
Cenk Kose	Conexant			cenk_kose@conexant.com
Takushi Kunihiro	Sony			kuni@wcs.sony.co.jp
Edwin Kwon	Samsung			cy.kwon@samsung.com
Patrick Labbe	Motorola			patrick.labbe@motorola.com
Dongjun (DJ) Lee	Samsung			djthekid.lee@samsung.com
Lin-Nan Lee	HNS			llee@hns.com
Sheng Lee	Ralink			shenghlee@ralinktech.com
Sok-kyu Lee	ETRI			sk-lee@etri.re.kr
Pen Li	Philips			pen.li@philips.com
Yuan Li	Infocomm			liyuan@i2r.a-star.edu.sg
Kevin Liao	Ralink			kevin_liao@ralink.com.tw
Isaac Lim	Panasonic			isaac.limwl@sg.panasonic.com
Alfred Lin	Winbond			halin@winbond.com
Albert Liu	Infineon			Albert.Liu@infineon.com
Der-Zheng Liu	Realtek			dzliu@realtek.com.tw
Michael Livshitz	Nortel			livshitz@nortel.com
Peter Loc	Marvell			ploc@marvell.com
Peter Lojko	Qualcomm			c_plojko@qualcomm.com
Hui-Ling Lou	Marvell			hlou@marvell.com
Siti Massimiliano	ST			massimiliano.siti@st.com
Adina Matache	Marvell			amatache@marvell.com
Laurent Mazet	Motorola			laurent.mazet@crm.mot.com
Darren McNamara	Toshiba			Darren.McNamara@toshiba-trel.com
Irina Medvedev	Qualcomm			irinam@qualcomm.com
Arnaud Meylan	Qualcomm			ameylan@qualcomm.com
Morgan Miki	Sharp			miki@slab.tnr.sharp.co.jp
Seungwook Min	ETRI			swmin@etri.re.kr
Andy Molisch	Mitsubishi			molisch@merl.com
Mike Moreton	ST			mike.moreton@st.com
Yuichi Morioka	Sony			morioka@wcs.sony.co.jp

Exhibit 1015
Ericsson Inc. v. Woodbury Wireless LLC
Page 000004

Additional Author(s):				
Name	**Company**	**Address**	**Phone**	**email**
Markus Muck	Motorola			markus.muck@motorola.com
Aon Mujtaba	Agere			mujtaba@agere.com
Yukimasa Nagai	Mitsubishi			yuki-n@isl.melco.co.jp
Seigo Nakao	Sanyo			snakao@gf.hm.rd.sanyo.co.jp
Sanjiv Nanda	Qualcomm			snanda@qualcomm.com
Chiu Ngo	Samsung			cngo@sisa.samsung.com
Huaning Niu	Samsung			huaning.niu@samsung.com
Ivan Oakes	ST			ivan.oakes@st.com
Yoshihiro Ohtani	Sharp			ohtani@slab.tnr.sharp.co.jp
Takeshi Onizawa	NTT			onizawa@ansl.ntt.co.jp
Job Oostveen	Philips			job.oostveen@philips.com
Fabio Osnato	ST			fabio.osnato@st.com
Pratima Pai	ST			Pratima.Pai@st.com
Thomas Pare	Ralink			tpare@ralinktech.com
Jean-Noel Patillon	Motorola			jean-noel.patillon@motorola.com
Wei-Chung Peng	Winbond			WCPeng0@winbond.com
Eldad Perahia	Intel			eldad.perahia@intel.com
Jim Petranovich	Conexant			jim.petranovich@conexant.com
Neeraj Poojary	TI			npoojary@ti.com
Aleksandar Purkovic	TI			apurkovic@ti.com
Ali Raissinia	Airgo			AliRaissinia@AirgoNetworks.com
Sthanunathan Ramakrishnan	TI			sthanu@ti.com
Sridhar Ramesh	TI			rsridhar@india.ti.com
Jon Rosdahl	Samsung			jon.rosdahl@partner.samsung.com
Stephanie Rouquette-Leveil	Motorola			stephanie.rouquette@motorola.com
Mike Rude	Metalink			mike@metalinkbb.com
Vincenzo Scarpa	ST			Vincenzo.Scarpa@st.com
Erik Schylander	Philips			erik.schylander@philips.com
Michael Seals	Conexant			michael.seals@conexant.com
Huai-Rong Shao	Samsung			hr.shao@samsung.com
Steve Shellhammer	Qualcomm			sshellha@qualcomm.com
Masaaki Shida	Hitachi			shida@crl.hitachi.co.jp
Takashi Shono	Intel			takashi.shono@intel.com
Sebastien Simoens	Motorola			simoens@motorola.com
Matt Smith	Atheros			msmith@atheros.com
Robert Stacey	Intel			robert.j.stacey@intel.com
Adrian Stephens	Intel			adrian.p.stephens@intel.com
Victor Stolpman	Nokia			victor.stolpman@nokia.com
Sumei Sun	Infocomm			sunsm@i2r.a-star.edu.sg
Shravan Surineni	Qualcomm			shravans@qualcomm.com
Masahiro Takagi	Toshiba			masahiro3.takagi@toshiba.co.jp
Seiichiro Takahashi	Sanyo			stakahashi@stec.sanyo.com
Daisuke Takeda	Toshiba			daisuke.takeda@toshiba.co.jp
Teik-Kheong Tan	Philips			teik-kheong.tan@philips.com
Yasuhiro Tanaka	Sanyo			y_tanaka@gf.hm.rd.sanyo.co.jp
Stephan ten Brink	Realtek			stenbrink@realtek-us.com

Exhibit 1015
Ericsson Inc. v. Woodbury Wireless LLC
Page 000005

Additional Author(s):				
Name	**Company**	**Address**	**Phone**	**email**
Ganesan Thiagarajan	TI			gana@ti.com
Eric Tokubo	Symbol			eric.tokubo@symbol.com
Solomon Trainin	Intel			solomon.trainin@intel.com
David Tung	Ralink			dtung@ralinktech.com
Stefano Valle	ST			stefano.valle@st.com
Richard Van Nee	Airgo			vannee@airgonetworks.com
Nico van Waes	Nokia			nico.vanwaes@nokia.com
Allert van Zelst	Airgo			allertvanzelst@airgonetworks.com
George Vlantis	ST			george.vlantis@st.com
Timothy Wakeley	HP			tim.wakeley@hp.com
Rod Walton	Qualcomm			rwalton@qualcomm.com
Xiaowen Wang	Agere			xiaowenw@agere.com
Mark Webster	Conexant			mark.webster@conexant.com
Menzo Wentink	Conexant			menzo.wentink@conexant.com
Mike Wilhoyte	TI			wilhoyte@ti.com
Ariton Xhafa	TI			axhafa@ti.com
Tomoya Yamaura	Sony			yamaura@wcs.sony.co.jp
Eric Yang	InterDigital			eric.yang@interdigital.com
Wen-Chang Yeh	Zydas			wcyeh@zydas.com.tw
Heejung Yu	ETRI			heejung@etri.re.kr
Eldad Zeira	InterDigital			eldad.zeira@interdigital.com
Jin Zhang	Mitsubishi			jzhang@merl.com
Ning Zhang	Atheros			ning@atheros.com

Exhibit 1015
Ericsson Inc. v. Woodbury Wireless LLC
Page 000006

Contents

1 Introduction 10
2 PHY Interface 10
3 PLCP packet format 10
3.1 Operating Mode 11
3.2 Modulation and Coding Scheme (MCS) 12
3.3 Transmitter Block Diagram (this section is informative) 13
3.4 Mathematical description of signals 15
3.4.1 Transmission in the upper/lower 20MHz of a 40MHz channel 21
3.5 Legacy Field Transmission 21
3.5.1 Cyclic shift definition for the legacy fields 21
3.5.2 Legacy Short Training Field 22
3.5.3 Legacy Long Training Field 23
3.5.4 The Legacy Signal Field 24
3.6 The High Throughput Preamble 26
3.6.1 Cyclic shift for the High Throughput preamble 26
3.6.2 The High Throughput Signal Field 26
3.6.3 CRC calculation 31
3.6.4 The HT STF training symbol 32
3.6.5 The HT-LTF long training Field 33
4 The Data Field 37
4.1 The service field 38
4.2 Scrambler 38
4.3 Coding 38
4.3.1 Encoder Parsing operation 38
4.3.2 Coding and puncturing 39
4.3.3 Low density parity check codes (optional ECC) 39
4.4 Data Interleaver 44
4.4.1 Stream Parser 45
4.4.2 Frequency interleaver 45
4.5 QAM Mapping 47

Exhibit 1015
Ericsson Inc. v. Woodbury Wireless LLC
Page 000007

4.5.1 Space-Time-Block-Coding (STBC) ... 47
4.6 Pilot Subcarriers ... 49
4.7 OFDM Modulation ... 50
4.7.1 Spatial Mapping ... 51
4.7.2 20MHz HT transmission ... 53
4.7.3 Transmission in 40MHz HT mode ... 54
4.7.4 Transmission in HT duplicate mode. ... 55
4.7.5 Transmission with a short guard interval ... 56
4.8 Legacy duplicate transmission ... 56
5 Channel Numbering and Channelization ... 56
5.1 Channel Allocation in the 5 GHz Band ... 57
5.2 Channel Allocation in the 2.4 GHz Band ... 57
6 Transmit Spectrum Mask ... 58
6.1 Spectral Flatness ... 59
6.2 Transmit Power ... 60
6.3 Transmit center frequency tolerance ... 60
7 Packet alignment ... 60
7.1 Packet alignment ... 60
7.2 Reduced Interframe Space (RIFS) ... 61
8 Beamforming ... 61
8.1 CSI Matrices Feedback ... 62
8.2 Non Compressed Steering Matrix Feedback ... 63
8.3 Compressed Steering Matrix Feedback ... 63
9 High Throughput Preamble Format for Sounding PPDUs ... 65
9.1 Sounding with a zero length packet ... 66
9.2 Sounding PPDU for calibration ... 66
9.3 Sounding PPDU for channel quality assessment (informative) ... 67
10 Optional Features ... 67
11 References ... 68
Appendix A: Rate Dependent Parameters for High Throughput Modulation and Coding Schemes (MCS) ... 69
Appendix B – LDPC Matrix Definitions ... 78

Exhibit 1015
Ericsson Inc. v. Woodbury Wireless LLC
Page 000008

Appendix C – Acronyms 82

Exhibit 1015
Ericsson Inc. v. Woodbury Wireless LLC
Page 000009

1 Introduction

This document specifies those features of a device that are necessary to achieve interoperability. It specifies the signals that may be transmitted by the device and received by the device's receivers. This device is referred to as an HT (High Throughput) device.

The HT device is assumed to be compliant with 802.11a/b/g/j standards. This document describes the extensions needed in the physical layer for high throughput transmission.

2 PHY Interface

The PHY interfaces to the MAC through the TX vector and the RX vector. The TX vector supplies the PHY with per-packet [1] TX parameters. Using the RX vector, the PHY informs the MAC of the received packet parameters. The specification of this interface is outside the scope of this document.

3 PLCP packet format

Two new formats are defined for the PLCP (PHY Layer Convergence Protocol): Mixed mode and Green Field. These two formats are called HT formats. Figure 1 shows the legacy format and the HT formats. In addition to the HT formats, there is a legacy duplicate format (specified in section 4.8) that duplicates the 20MHz legacy packet in two 20MHz halves of a 40MHz channel.

[1] *Packet* is equivalent to PPDU in this document.

Exhibit 1015
Ericsson Inc. v. Woodbury Wireless LLC
Page 000010

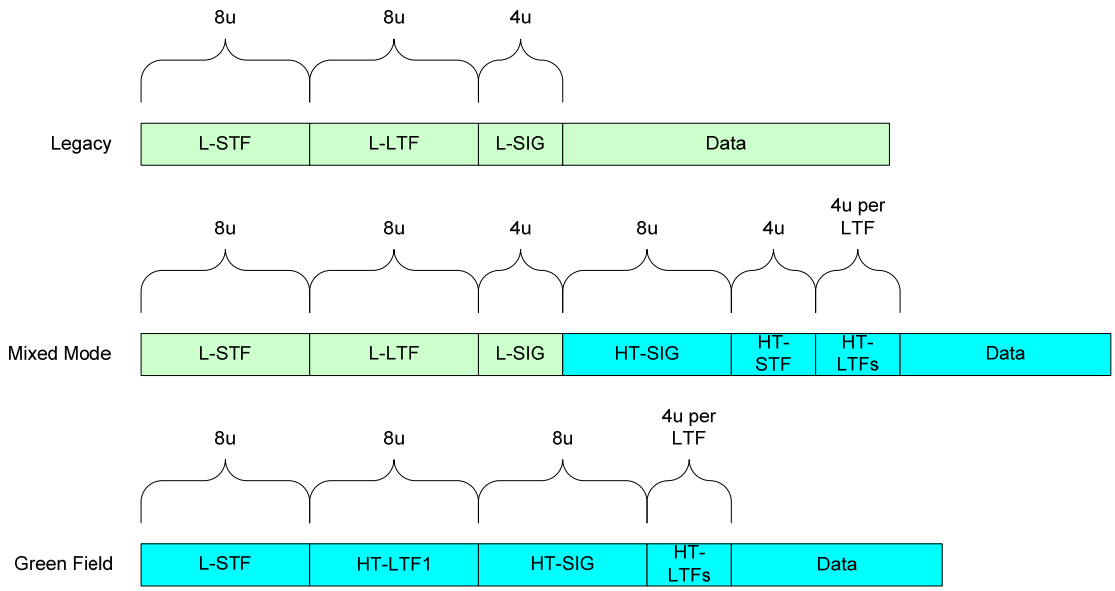

Figure 1- PLCP packet format

The elements of the PCLP packet are:

L-STF: Legacy Short Training Field

L-LTF: Legacy Long Training Field

L-SIG: Legacy Signal Field

HT-SIG: High Throughput Signal Field

HT-STF: High Throughput Short Training Field

HT-LTF1: First High Throughput Long Training Field

HT-LTF's: Additional High Throughput Long Training Fields

Data – The data field includes the PSDU (PHY sub-layer Service Data Unit)

The HT-SIG, HT-STF and HT-LTF's exist only in HT packets. In legacy and legacy duplicate formats only the L-STF, L-LTF, L-SIG and Data fields exist.

3.1 Operating Mode

The PHY will operate in one of 3 modes –

- **Legacy Mode** – in this mode packets are transmitted in the legacy 802.11a/g format.
- **Mixed Mode –** in this mode packets are transmitted with a preamble compatible with the legacy 802.11a/g – the legacy Short Training Field (STF), the legacy Long Training Field (LTF) and the legacy signal field are transmitted so they can be decoded by legacy 802.11a/g devices. The rest of the packet has a new format**.** In this mode the receiver shall be able to decode both the Mixed Mode packets and legacy packets.

Exhibit 1015
Ericsson Inc. v. Woodbury Wireless LLC
Page 000011

- **Green Field –** in this mode high throughput packets are transmitted without a legacy compatible part. This mode is optional. In this mode the receiver shall be able to decode both Green Field mode packets, Mixed Mode packets and legacy format packets. An HT device which does not support the reception of a GF packet shall be able to detect that GF transmissions are HT transmissions (as opposed to legacy transmissions) and treat them as HT packets with a failing HT-SIG CRC.

The operation of PHY in the frequency domain is divided to the following modes:

- **LM –** Legacy Mode – equivalent to 802.11a/g
- **HT-Mode –** In HT mode the device operates in either 40MHz bandwidth or 20MHz bandwidth and with one to four spatial streams. This mode includes the HT-duplicate mode.
- **Duplicate Legacy Mode –** in this mode the device operates in a 40MHz channel composed of two adjacent 20MHz channel. The packets to be sent are in the legacy 11a format in each of the 20MHz channels. To reduce the PAPR the upper channel (higher frequency) is rotated by 90º relative to the lower channel.
- **40 MHz Upper Mode –** used to transmit a legacy or HT packet in the upper 20MHz channel of a 40MHz channel.

40 MHz Lower Mode – used to transmit a legacy or HT packet in the lower 20MHz channel of a 40MHz channel

LM is mandatory and HT-Mode for 1 and 2 spatial streams at 20MHz are mandatory at the AP. LM is mandatory and HT-Mode for 1 spatial stream at 20MHz is mandatory for non-AP STAs.

3.2 Modulation and Coding Scheme (MCS)

The Modulation and Coding Scheme (MCS) is a value that determines the modulation, coding and number of spatial channels. It is a compact representation that is carried in the high throughput signal field.

Rate dependent parameters for the full set of modulation and coding schemes (MCS) are shown in Appendix A in Tables A-1 through A-15. These tables give rate dependent parameters for MCSs with indices 0 through 76. MCS indices 77-127 are reserved.

MCS Tables A-1 through A-4 show rate-dependent parameters for equal-modulation MCSs in one, two, three, and four streams for 20 MHz operation. Tables A-5 through A-8 show rate-dependent parameters for equal-modulation MCSs in one, two, three, and four streams for 40 MHz operation. The same equal modulation MCSs are used for 20 MHz and 40 MHz operation. Table A-9 shows rate-dependent parameters for the 40 MHz, 6 Mbps HT duplicate mode.

Exhibit 1015
Ericsson Inc. v. Woodbury Wireless LLC
Page 000012

The remaining Tables, 10 through 15, show rate-dependent parameters for the MCSs with unequal modulation for use with TxBF and unbalanced STBC modes including the N_SS=2, N_STS=3 case, and N_SS=3, N_STS=4 case as specified in Table 15. Tables A-10 through A-12 are for 20 MHz operation. Tables A-13 through A-15 are for 40 MHz operation. The same unequal modulation MCSs are used in 20 MHz and 40 MHz operation.

MCS 0 through 15 are mandatory in 20 MHz with 800 nsec guard interval at an AP STA. MCS 0 through 7 are mandatory in 20MHz with 800ns guard interval at all STAs. All other MCSs and modes are optional, specifically including Tx and Rx support of 400 nsec guard interval, operation in 40 MHz, and support of MCSs with indices 16 through 76. The parameters in the table are:

- Rate: Coding Rate
- N_{SS}: Number of Spatial Streams
- N_{SD}: Number of Data Subcarriers
- N_{SP}: Number of pilot subcarriers
- N_{BPSC}: Number of coded bits per subcarrier per spatial stream
- N_{CBPS}: Number of Code Bits Per OFDM Symbol (total of all spatial streams)
- N_{DBPS}: Number of data bits per MIMO-OFDM symbol
- N_{TBPS}: Total number of coded bits per subcarrier

3.3 Transmitter Block Diagram (this section is informative)

The transmitter is composed of the following blocks:

- **Scrambler** – scrambles the data to prevent long sequences of zeros or ones – see section 4.2.
- **Encoder Parser** – de-multiplexes the scrambled bits among N_{ES} FEC encoders, in a round robin manner.
- **FEC encoders** – encodes the data to enable error correction – an FEC encoder may include a binary convolutional encoder followed by a puncturing device, or an LDPC encoder
- **Stream Parser** – divides the output of the encoders into blocks that will be sent to different interleaver and mapping devices. The sequences of the bits sent to the interleaver are called **spatial streams**.
- **Interleaver** – interleaves the bits of each spatial stream (changes order of bits) to prevent long sequences of noisy bits from entering the FEC decoder.

Exhibit 1015
Ericsson Inc. v. Woodbury Wireless LLC
Page 000013

- **QAM mapping** – maps the sequence of bit in each spatial stream to constellation points (complex numbers).
- **Spatial Mapping** – maps spatial streams to different transmit chains. This may include one of the following:
    - **Direct mapping** – each sequence of constellation points is sent to a different transmit chain.
    - **Spatial expansion** – each vector of constellation points from all the sequences is multiplied by a matrix to produce the input to the transmit chains.
    - **Space Time Block coding** – constellation points from one spatial stream are spread into two spatial streams using a space time block code.
    - **Beam Forming -** similar to spatial expansion: each vector of constellation points from all the sequences is multiplied by a matrix of steering vectors to produce the input to the transmit chains.
- **Inverse Fast Fourier Transform** – converts a block of constellation points to a time domain block.
- **Cyclic shift insertion** – inserts the cyclic shift into the time domain block. In the case that spatial expansion is applied that increases the number of transmit chains, the cyclic shift may be applied in the frequency domain as part of spatial expansion.
- **Guard interval insertion** – inserts the guard interval.
- **Optional windowing** – smoothing the edges of each symbol to increase spectral decay

Exhibit 1015
Ericsson Inc. v. Woodbury Wireless LLC
Page 000014

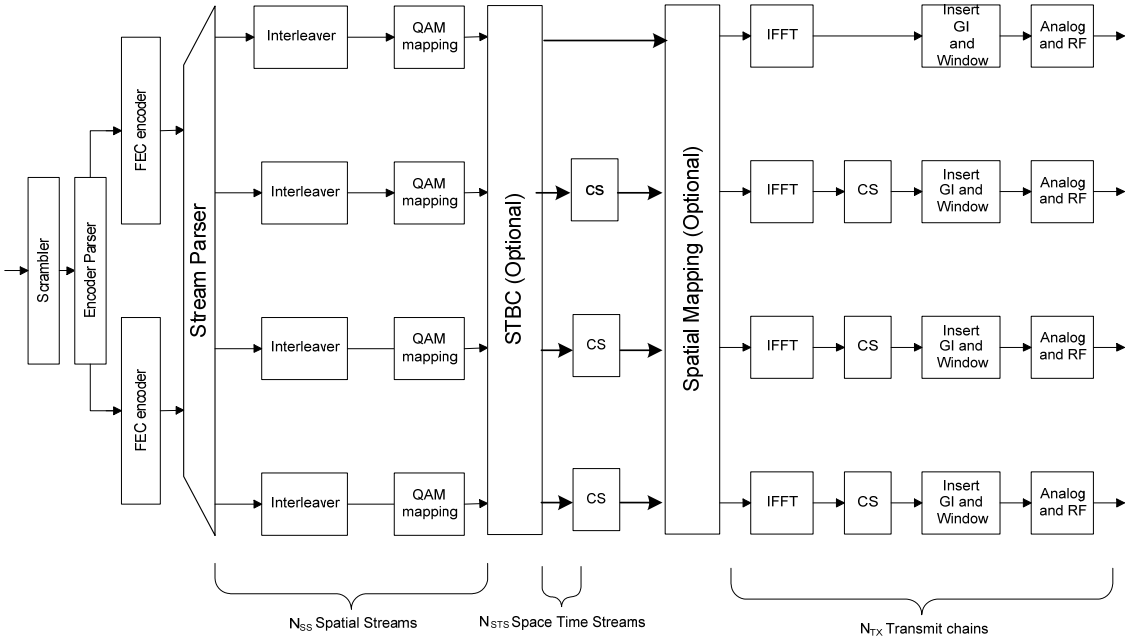

Figure 2 - Transmitter block diagram

Figure 2 shows a block diagram of the transmitter. Different implementation are possible as long as they are mathematically equivalent.

3.4 Mathematical description of signals

For the description of the convention on mathematical description of signals see section 17.3.2.4 of [1]

In the case of a legacy mode and HT mode transmission over a 20MHz channel, the channel is divided into 64 sub-carriers. In the legacy mode, signal is transmitted on sub-carriers -26 to -1 and 1 to 26, with 0 being the center (DC) carrier. In the HT modes signal is transmitted on sub-carriers -28 to -1 and 1 to 28.

In the case of a 40MHz HT transmission, two adjacent 20MHz channels are used. The channel is divided into 128 sub-carriers. Signal is transmitted on sub-carriers -58 to -2 and 2 to 58.

In the case of the legacy duplicate mode over 40MHz, the same data are transmitted over two adjacent 20MHz channels. In this case the 40MHz channel is divided into 128 sub-carriers and the data are transmitted on carriers -58 to -6 and 6 to 58.

Exhibit 1015
Ericsson Inc. v. Woodbury Wireless LLC
Page 000015

1

2 **Table 1 - Timing related constants**

Parameter	Value in legacy 20MHz channel	Value in 20MHz HT channel	Value in 40MHz channel	
			HT format	Legacy Duplicate
N_{SD}: Number of data subcarriers	48	52	108	48[2]
N_{SP}: Number of pilot subcarriers	4	4	6	4[1]
N_{ST}: Total Number of subcarriers	52	56	114	
N_{SR}: Number of subcarriers occupying half of the overall BW	26	28	58	
Δ_F : subcarrier frequency spacing	312.5kHz (20MHz/64)	312.5kHz	312.5kHz (40MHz/128)	
T_{FFT}: IFFT/FFT period	3.2μsec	3.2μsec	3.2μsec	
T_{GI}: Guard Interval length	0.8μsec= $T_{FFT}/4$	0.8μsec	0.8μsec	
T_{GI2}: Double GI	1.6μsec	1.6μsec	1.6μsec	
T_{GIS}: Short Guard Interval length	0.4μsec= $T_{FFT}/8$	0.4μsec	0.4μsec	
$T_{L\text{-}STF}$: Legacy Short training sequence length	8μsec=10× $T_{FFT}/4$	8μsec	8μsec	
$T_{L\text{-}LTF}$: Legacy Long training sequence length	8μsec=2× $T_{FFT}+T_{GI2}$	8μsec	8μsec	
T_{SYM}: Symbol	4μsec= $T_{FFT}+T_{GI}$	4μsec	4μsec	

[2] This value used for HT duplicate mode

Exhibit 1015
Ericsson Inc. v. Woodbury Wireless LLC
Page 000016

Parameter	Value in legacy 20MHz channel	Value in 20MHz HT channel	Value in 40MHz channel	
			HT format	Legacy Duplicate
Interval				
T_{SYMS}: Short GI Symbol Interval	3.6µsec= $T_{FFT}+T_{GIS}$	3.6µsec	3.6µsec	
$T_{L\text{-}SIG}$	4µsec= T_{SYM}	4µsec	4µsec	
$T_{HT\text{-}SIG}$	NA	8µsec= $2T_{SYM}$	8µsec	
$T_{HT\text{-}STF}$: HT STF time	NA	4µsec	4µsec	
$T_{HT\text{-}LTF1}$: HT first long training field length	NA	4µsec in mixed mode, 8usec in green field	4µsec in mixed mode, 8usec in green field	
$T_{HT\text{-}LTFs}$: HT second, and subsequent, long training fields length	NA	4µsec	4µsec	

Table 2 - frequently used parameters

Symbol	Explanation
N_{CBPS}	Number of coded bits per symbol
N_{CBPSS}	Number of coded bits per symbol per spatial stream
N_{DBPS}	Number of data bits per symbol
N_{BPSC}	Number of coded bits per single carrier
N_{STS}	Number of space time streams
N_{SS}	Number of spatial streams
N_{ESS}	Number of extension spatial streams
N_{TX}	Number of transmit chains.
N_{ES}	Number of FEC encoders
N_{LTF}	Number of HT long training fields

Exhibit 1015
Ericsson Inc. v. Woodbury Wireless LLC
Page 000017

The transmitted signal is described in a complex base-band signal notation. The actual transmitted signal is related to the complex signal by the following relation:

$$r_{RF}(t) = \mathrm{Re}\left\{ r(t)\exp\left(j2\pi f_c t\right)\right\} \quad (1)$$

where

$\mathrm{Re}\{\cdot\}$ represents the real part of a complex variable;

f_c denotes the center frequency of the carrier.

The transmitted baseband signal consists of several fields. The timing boundaries for the various fields are shown in Figure 3.

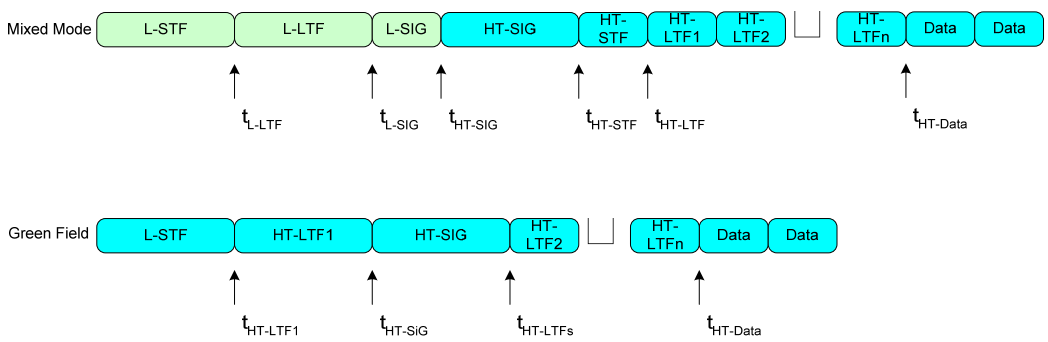

Figure 3: Timing boundaries for PPDU Fields

The time offsets t_{Field} determines the starting time of the corresponding field.

In Mixed mode, the signal transmitted on transmit chain i_{TX} is

Exhibit 1015
Ericsson Inc. v. Woodbury Wireless LLC
Page 000018

$$
\begin{aligned}
r_{PPDU}^{(i_{TX})}(t) \;=\; & r_{L-STF}^{(i_{TX})}(t) + r_{L-LTF}^{(i_{TX})}\left(t - t_{L-LTF}\right) \\
& + r_{L-SIG}^{(i_{TX})}\left(t - t_{L-SIG}\right) \\
& + r_{HT-SIG}^{(i_{TX})}\left(t - t_{HT-SIG}\right) \\
& + r_{HT-STF}^{(i_{TX})}\left(t - t_{HT-STF}\right) \\
& + \sum_{i_{LTF}=1}^{N_{LTF}} r_{HT-LTF}^{(i_{TX},i_{LTF})}\left(t - t_{HT-LTF} - \left(i_{LTF} - 1\right)T_{HT-LTFs}\right) \\
& + r_{HT\ DATA}^{(i_{TX})}(t - t_{HT\ DATA})
\end{aligned}
\tag{2}
$$

where

$$t_{L-LTF} = T_{L-STF}\,, \tag{3}$$

$$t_{L-SIG} = t_{L-LTF} + T_{L-LTF}\,, \tag{4}$$

$$t_{HT-SIG} = t_{L-SIG} + T_{L-SIG}\,, \tag{5}$$

$$t_{HT-STF} = t_{HT-SIG} + T_{HT-SIG}\,,$$

$$t_{HT-LTF} = t_{HT-STF} + T_{HT-STF} \tag{6}$$

and

$$t_{HT-Data} = t_{HT-LTF} + N_{LTF} \cdot T_{HT-LTFs}\,. \tag{7}$$

In the case of Green Field mode the transmitted signal on transmit chain i_{TX} is:

$$
\begin{aligned}
r_{PPDU}^{(i_{TX})}(t) \;=\; & r_{L-STF}^{(i_{TX})}(t) + r_{HT-LTF1}^{(i_{TX})}\left(t - t_{HT-LTF1}\right) \\
& + r_{HT-SIG}^{(i_{TX})}\left(t - t_{HT-SIG}\right) \\
& + \sum_{i_{LTF}=2}^{N_{LTF}} r_{HT-LTF}^{(i_{TX},i_{LTF})}\left(t - t_{HT-LTFs} - \left(i_{LTF} - 2\right)T_{HT-LTFs}\right) \\
& + r_{HT\ DATA}^{(i_{TX})}(t - t_{HT\ DATA})
\end{aligned}
$$

where

Exhibit 1015
Ericsson Inc. v. Woodbury Wireless LLC
Page 000019

$$t_{HT-LTF1} = T_{L-STF}\,, \tag{8}$$

$$t_{HT-SIG} = t_{HT-LTF1} + T_{HT-LTF1}\,, \tag{9}$$

$$t_{HT-LTFs} = t_{HT-SIG} + T_{HT-SIG} \tag{10}$$

and

$$t_{HT-Data} = t_{HT-LTFs} + (N_{LTF} - 1)gT_{HT-LTFs}\,, \tag{11}$$

Each baseband waveform $r_{Field}^{(i)}(t)$ is defined via the discrete Fourier transform as

$$r_{Field}^{(i)}(t) = \frac{1}{\sqrt{N_{Field}^{Tone}}}\, w_{T_{Field}}(t) \sum_k X_k^{(i)} \exp\left(j 2\pi k \Delta_F t \right) \tag{12}$$

This general representation holds for all fields. The definition of $w_{T_{Field}}(t)$ is given in section 17.3.2.4 of [1]. The frequency domain symbols $X_k^{(i_{TX})}$ define the field, as shall be specified in the following subsections.

The $1/\sqrt{N_{Field}^{Tone}}$ scale factor in (12) ensures that the total power of the time domain signal as summed over all transmit chains is either 1 or lower than 1 when required. The following table summarizes the various values of N_{Field}^{Tone}:

Field	N_{Field}^{Tone}	
	20 MHz	40 MHz
L-STF	12	24
L-LTF	52	104
L-SIG	52	104
HT-SIG	52/56*	104/114*
HT-STF	12	24
HT-LTF	56	114
HT-Data	56	114
HT-Data- 40 MHz Dup. Format	-	104

Exhibit 1015
Ericsson Inc. v. Woodbury Wireless LLC
Page 000020

Field	N_{Field}^{Tone}	
	20 MHz	40 MHz

Notes:

*56 and 114 are for green field mode, 52 and 104 are for mixed mode.

The numbers in the table refer only to the value of N_{Field}^{Tone} as it appears in equation (12) and in subsequent specification of various fields. It may be different from the actual number of tones being transmitted.

Table 3 - number of tones in each field

3.4.1 Transmission in the upper/lower 20MHz of a 40MHz channel

When transmitting in the upper/lower 20MHz portion of a 40MHz channel, the mathematical definition of transmission shall follow that of a 20MHz channel with f_c in equation (1) replaced by $f_c \pm 10MHz$.

3.5 Legacy Field Transmission

The following section describes the transmission of the legacy training field and the legacy signal field as part of a mixed mode packet.

3.5.1 Cyclic shift definition for the legacy fields.

In the rest of the document cyclic shift is used to prevent unintentional beamforming when the same signal or similar signals are transmitted through different spatial streams. A cyclic shift of length τ on a signal $s(t)$ on interval $0 \le t \le T$ is defined by replacing $s(t)$ with $s(t-\tau)$ when $\tau < t \le T$[3] and with $s(t-\tau+T)$ when $0 \le t \le \tau$. Cylic shift is applied to each OFDM symbol in the packet separately. The following table specifies the values for the cyclic shift that is applied in the legacy short training field (in a MM packet), the legacy long training field, and legacy signal field. It also applies to the HT signal field in a mixed mode packet.

$T_{CS}^{i_{TX}}$ values for the legacy portion of the packet				
Number of Tx	cyclic shift for	cyclic shift for	cyclic shift for	cyclic shift for

[3] $s_{CS}(t) = \begin{cases} s(t-\tau) & \tau < t \le T \\ s(t-\tau+T) & 0 \le t \le \tau \end{cases}$

Exhibit 1015
Ericsson Inc. v. Woodbury Wireless LLC
Page 000021

Chains	Tx chain 1	Tx chain 2	Tx chain 3	Tx chain 4
1	0ns	-	-	-
2	0ns	-200ns	-	-
3	0ns	-100ns	-200ns	-
4	0ns	-50ns	-100ns	-150ns

Table 4 - Cyclic shift for legacy portion of the packet

3.5.2 Legacy Short Training Field

The L-STF is identical to the 802.11a short training symbol. The legacy short training OFDM symbol in the 20MHz mode is

$$S_{-26,26} = \sqrt{1/2}\ \{0,0,1+j,0,0,0,-1-j,0,0,0,1+j,0,0,0,-1-j,0,0,0,-1-j,0,0,0,1+j,0,0,0, \\ 0,0,0,0,-1-j,0,0,0,-1-j,0,0,0,1+j,0,0,0,1+j,0,0,0,1+j,0,0,0,1+j,0,0\}. \quad (13)$$

The normalization factor $\sqrt{1/2}$ is the QPSK normalization.

The legacy short training OFDM symbol in 40MHz mode is based on:

$$S_{-58,58} = \sqrt{1/2}\,\{0,0,1+j,0,0,0,-1-j,0,0,0,1+j,0,0,0,-1-j,0,0,0,-1-j,0,0,0,1+j,0,0,0, \\ 0,0,0,0,-1-j,0,0,0,-1-j,0,0,0,1+j,0,0,0,1+j,0,0,0,1+j,0,0,0,1+j,0,0,0,0,0, \\ 0,0,0,0,0,0,0,0,0,0,1+j,0,0,0,-1-j,0,0,0,1+j,0,0,0,-1-j,0,0,0,-1-j,0,0,0,+1+j, \\ 0,0,0,0,0,0,0,-1-j,0,0,0,-1-j,0,0,0,1+j,0,0,0,1+j,0,0,0,1+j,0,0,0,+1+j,0,0\} \quad (14)$$

The tones in the upper sub-channel (sub-carriers 6-58) are phase rotated by +90º. The 90º rotation helps keep the PAPR of the STF in 40MHz comparable to that in 20MHz.

In mixed mode the L-STF on the i_{TX} 'th transmit chain is

$$r_{L-STF}^{(i_{TX})}(t) = \frac{1}{\sqrt{N_{TX} \cdot N_{L-STF}^{Tone}}}\, w_{T_{L-STF}}(t) \cdot \\ \left(\sum_{k=-N_{SR}}^{0} S_k \exp\left(j2\pi k\Delta_F \left(t - T_{CS}^{i_{TX}}\right)\right) + \right. \\ \left. \Upsilon \sum_{k=1}^{N_{SR}} S_k \exp\left(j2\pi k\Delta_F \left(t - T_{CS}^{i_{TX}}\right)\right)\right) \quad (15)$$

Exhibit 1015
Ericsson Inc. v. Woodbury Wireless LLC
Page 000022

In green field the L-STF on the i_{TX} 'th transmit chain is

$$r_{L-STF}^{(i_{TX})}(t) = \frac{1}{\sqrt{N_{STS} \cdot N_{L-STF}^{Tone}}} w_{T_{L-STF}}(t) \cdot \left(\sum_{k=-N_{SR}}^{0} \sum_{i_{STS}=1}^{N_{STS}} [Q_k]_{i_{TX} i_{STS}} [P_{HTLTF}]_{i_{STS},1} S_k \exp\left(j 2\pi k \Delta_F \left(t - T_{CS}^{i_{STS}} \right) \right) + \Upsilon \sum_{k=1}^{N_{SR}} \sum_{i_{STS}=1}^{N_{STS}} [Q_k]_{i_{TX} i_{STS}} [P_{HTLTF}]_{i_{STS},1} S_k \exp\left(j 2\pi k \Delta_F \left(t - T_{CS}^{i_{STS}} \right) \right) \right) \quad (16)$$

In the case of Mixed Mode operation $T_{CS}^{i_{TX}}$ takes values from Table 4. In the case of Green Field operation $T_{CS}^{i_{STS}}$ takes values from Table 6. The value of Υ is 1 for 20MHz and j in 40MHz. Q_k is defined in section 4.7.1. The L-STF has a period of 0.8 µs. The entire short training field includes ten such periods, with a total duration of T_{L-STF} = 8 µs.

3.5.3 Legacy Long Training Field

The legacy long training OFDM symbol is identical to the 802.11a long training OFDM symbol. In the 20MHz mode, the long training OFDM symbol is given by

$$L_{-26,26} = \{1,1,-1,-1,1,1,-1,1,-1,1,1,1,1,1,1,-1,-1,1,1,-1,1,-1,1,1,1,1,1,0, 1,-1,-1,1,1,-1,1,-1,1,-1,-1,-1,-1,-1,1,1,-1,-1,1,-1,1,-1,1,1,1,1\} . \quad (17)$$

The legacy long training OFDM signal in the 40MHz mode is based on:

$$L_{-58,58} = \{1,1,-1,-1,1,1,-1,1,-1,1,1,1,1,1,1,-1,-1,1,1,-1,1,-1,1,1,1,1,1,0, 1,-1,-1,1,1,-1,1,-1,1,-1,-1,-1,-1,-1,1,1,-1,-1,1,-1,1,-1,1,1,1,1,0,0,0,0,0 \quad (18)$$
$$0,0,0,0,0,0,1,1,-1,-1,1,1,-1,1,-1,1,1,1,1,1,1,-1,-1,1,1,-1,1,-1,1,1,1,1,0, 1,-1,-1,1,1,-1,1,-1,1,-1,-1,-1,-1,-1,1,1,-1,-1,1,-1,1,-1,1,1,1,1\}$$

The tones in the upper sub-channel (sub-carriers 6-58) are phase rotated by +90º (see equation (19)).

The sub-carriers at ±32 in 40MHz, which are the DC sub-carriers for the legacy 20MHz transmission, are both nulled in the L-LTF. Such an arrangement allows proper synchronization of the 20MHz legacy device.

The L-LTF waveform is

Exhibit 1015
Ericsson Inc. v. Woodbury Wireless LLC
Page 000023

$$r_{L-LTF}^{(i_{TX})}(t) = \frac{1}{\sqrt{N_{TX} \cdot N_{L-LTF}^{Tone}}} w_{T_{L-LTF}}(t) \cdot \left(\sum_{k=-N_{SR}}^{0} L_k \exp\left(j 2\pi k \Delta_F \left(t - T_{GI2} - T_{CS}^{i_{TX}} \right) \right) + \Upsilon \sum_{k=1}^{N_{SR}} L_k \exp\left(j 2\pi k \Delta_F \left(t - T_{GI2} - T_{CS}^{i_{TX}} \right) \right) \right) \quad (19)$$

where T_{G12} = 1.6 μ sec. The value of Υ is 1 for 20MHz and j in 40MHz.

3.5.4 The Legacy Signal Field

The signal field is used to transfer rate and length information. It has different meaning when used in legacy transmission and when used in a non legacy transmission. When transmitted in a legacy 20MHz mode, it is transmitted using the same method and meaning as specified in section 17.3.4 of the IEEE 802.11a standard [1].

Rate (4 bits)				R	Length (12 bits)											P	Tail 6bits					
R1	R2	R3	R4														"0"	"0"	"0"	"0"	"0"	"0"
0	1	2	3	4	5	6	7	8	9	10	11	12	13	14	15	16	17	18	19	20	21	22	23

Figure 4 - The signal field

When the transmission is not a legacy transmission the fields in the signal field have different meaning. The bits in the rate field are [1,1,0,1] – corresponding to a rate of 6Mbps in legacy representation. The value in the length field is given through the TX vector. This value is used to spoof legacy devices to defer transmission for a period of corresponding to the length of the rest of the packet. When L-SIG TXOP Protection is not used (see "L-SIG TXOP Protection" section of the MAC spec), the value to be transmitted is $l = 3\left(\lceil N_{\text{data}} \rceil + N_{LTF} + 3\right) - 3$ where N_{data} is the number of **4usec** symbols in the data part of the packet. While using short GI N_{data} is equal to the actual number of symbols in the data part of the packet multiplied by $\frac{9}{10}$. N_{LTF} is the number of HT training symbols. The symbol $\lceil x \rceil$ denotes the lowest integer greater or equal to x.

When L-SIG TXOP Protection is used the value of l is defined in the "L-SIG TXOP Protection" section of the MAC spec.

If the Length field of the HT-SIG (see Table 7) is set to zero N_{data} shall be set zero in the formula for calculating l.

The length field is transmitted LSB first.

Exhibit 1015
Ericsson Inc. v. Woodbury Wireless LLC
Page 000024

The reserved bit shall be set to 0.

The parity field has the even parity of bits 0-16.

The signal field shall be encoded, interleaved and mapped, and have pilots inserted following the steps described in sections 17.3.5.5, 17.3.5.6, 17.3.5.8 of the IEEE802.11a standard [1]. The stream of 48, complex numbers generated by these steps is $d_k, \quad k = 0\text{K}\ 47$. The conversion of these into a time domain signal is described in the following table

Table 5 - generation of the signal field

Modulation Method	Conversion to Time Domain signal
20MHz transmission on several transmit chains – *i_{TX}*'th tx chain	$r_{L-SIG}^{(i_{TX})}(t) = w_{T_{SYM}}(t)\frac{1}{\sqrt{N_{TX}\cdot N_{L-SIG}^{Tone}}}\cdot \left(\sum_{k=0}^{47} d_k \exp\left(j2\pi M(k)\Delta_F\left(t-T_{GI}-T_{CS}^{i_{TX}}\right)\right)+ p_0\sum_{k=-N_{SR}}^{N_{SR}} P_k \exp(j2\pi k\Delta_F\left(t-T_{GI}-T_{CS}^{i_{TX}}\right)\right)$
40MHz transmission on several transmit chains – *i_{TX}*'th Tx chain.	$r_{L-SIG}^{(i_{TX})}(t) = w_{T_{SYM}}(t)\frac{1}{\sqrt{N_{TX}\cdot N_{L-SIG}^{Tones}}}\cdot \left(\sum_{k=0}^{47} d_k \exp\left(j2\pi\left(M(k)-32\right)\Delta_F\left(t-T_{GI}-T_{CS}^{i_{TX}}\right)\right)+ + j\sum_{k=0}^{47} d_k \exp\left(j2\pi\left(M(k)+32\right)\Delta_F\left(t-T_{GI}-T_{CS}^{i_{TX}}\right)\right)+ p_0\sum_{k=-N_{SR}}^{N_{SR}} P_k\left(\exp\left(j2\pi(k-32)\Delta_F\left(t-T_{GI}-T_{CS}^{i_{TX}}\right)\right)+ j\exp\left(j2\pi(k+32)\Delta_F\left(t-T_{GI}-T_{CS}^{i_{TX}}\right)\right)\right)$

$M(k), P_k$ are defined in section 17.3.5.9 of the 802.11a standard [1].

p_0 is the first pilot value in the sequence defined in section 17.3.5.9 of the 802.11a standard [1].

Exhibit 1015
Ericsson Inc. v. Woodbury Wireless LLC
Page 000025

3.6 The High Throughput Preamble

The high throughput preamble consists of the HT signal field, the HT short training field and the HT long training fields.

3.6.1 Cyclic shift for the High Throughput preamble

Throughout the high throughput preamble, cyclic shift is applied to prevent beamforming when similar signals are transmitted in different spatial streams. The same cyclic shift is applied to these streams during the transmission of the data portion of the packet. The values of the cyclic shift to be used during the HT preamble and the data portion of the packet (except the HT-SIG in a MM packet), are specified in Table 6:

$T_{CS}^{i_{STS}}$ values for HT portion of the packet				
Number of spatial streams	Cyclic shift for Spatial stream 1	Cyclic shift for spatial stream 2	Cyclic shift for spatial stream 3	Cyclic shift for spatial stream 4
1	0ns	-	-	-
2	0ns	-400ns	-	-
3	0ns	-400ns	-200ns	-
4	0ns	-400ns	-200ns	-600ns

Table 6 – Cyclic shift values of HT portion of the packet

3.6.2 The High Throughput Signal Field

The high throughput signal field is used to carry information required to interpret the HT packet formats. The high throughput signal field (HT_SIG) includes the following fields:

Table 7 - Fields of High Throughput Signal Field

Field Name	Num of Bits	Explanation and coding
Modulation and Coding Scheme	7	Index into The MCS table, LSB first
BW 20/40	1	0 if 20MHz or 40 MHz upper/lower; 1 if 40MHz
Length	16	The number of bytes of data in the PSDU – 0*-65535

Exhibit 1015
Ericsson Inc. v. Woodbury Wireless LLC
Page 000026

Field Name	Num of Bits	Explanation and coding
Smoothing	1	1 – channel estimate smoothing is allowed 0 – Only per-carrier independent (unsmoothed) channel estimate is recommanded.
Not Sounding	1	Indicates that the packet is a sounding packet. 0 –Sounding Packet 1 – Not a sounding packet
reserved one	1	set to 1
Aggregation	1	Set to 1 to indicate that the PPDU in the data portion of the packet contains an A-MPDU. Set to 0 otherwise
STBC	2	Indicates the difference between either the number of space time streams **N_{STS}** and the number of spatial streams **N_{SS}** indicated by the MCS 00 – No STBC (**N_{STS}=N_{SS})**
Advanced Coding	1	1 - LDPCC 0 - BCC.
Short GI	1	Set to 1 to Indicate that the short GI is used after the HT training. Set to 0 otherwise
Number of extension HT-LTF	2	Number of extension spatial stream(s) N_{ESS} . –b'00 – no extension spatial stream, b'01 – 1 additional spatial stream, b'10 2 additional spatial streams, b'11 3 additional spatial streams.
CRC	8	CRC of bits 0-23 in HT-SIG1 and bits 0-9 in HT-SIG2 – see section 3.6.3. The first bit to be transmitted is bit C7 as explained in aforementioned section.
Tail Bits	6	Used to terminate the trellis of the convolution coder. Set to 0.
Integer fields are transmitted least significant bit first. A value of 0 in the Length Field indicates a PPDU which does not include a data field. The packets ends after the last HT-LTF or the HT-SIG.		

Exhibit 1015
Ericsson Inc. v. Woodbury Wireless LLC
Page 000027

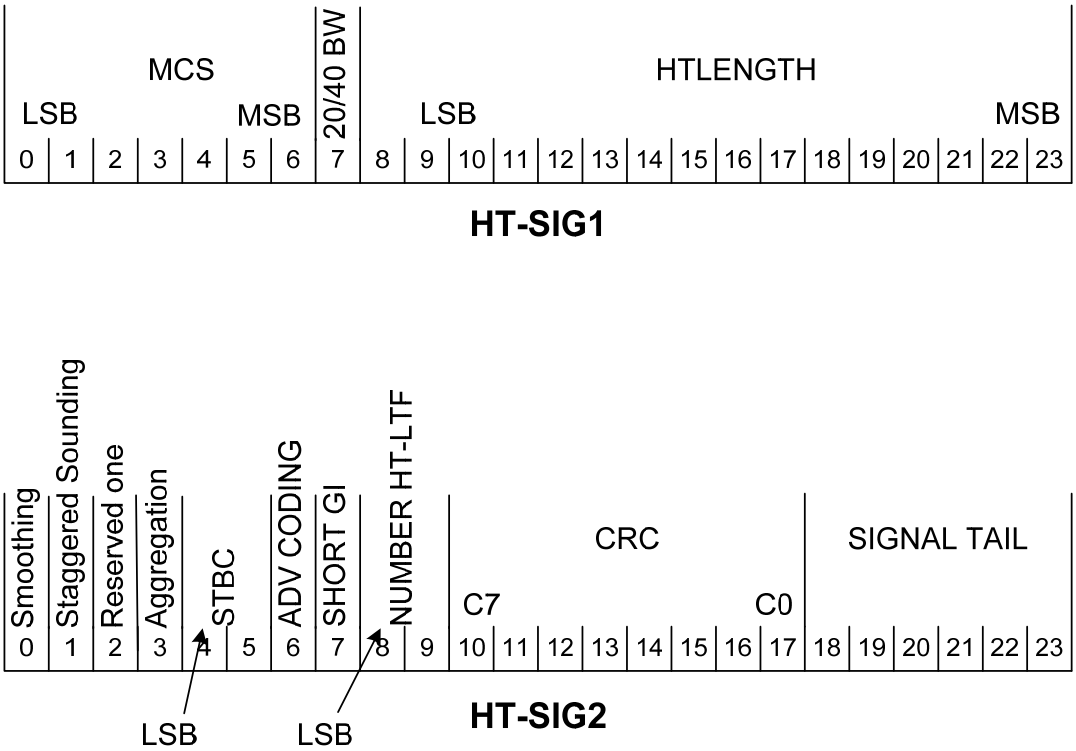

Figure 5 - HT SIG breakdown to HT-SIG1 and HT-SIG2

The HT-SIG is composed of two parts $HTSIG_1$ and $HTSIG_2$ each containing 24 bits. All the fields in the HT-SIG are transmitted LSB first.

The HT-SIG parts are encoded, interleaved, mapped, and have pilots inserted following the steps described in sections 17.3.5.5, 17.3.5.6, 17.3.5.8 of the IEEE802.11a standard [1]. The stream of 96, complex numbers generated by these steps are divided into two groups of 48 complex numbers: $d_{k,n}, \quad k = 0\text{K } 47, n = 0,1$ see Figure 5. The conversion of these into the time domain signal is according to the next tables:

Exhibit 1015
Ericsson Inc. v. Woodbury Wireless LLC
Page 000028

Table 8 - Modulation for the High Throughput Signal Field in a Mixed Mode Packet

Modulation Method	Conversion to Time Domain signal
20MHz transmission - i_{TX} 'th stream	$r_{HT-SIG}^{i_{TX}}(t)=\frac{1}{\sqrt{N_{TX}\cdot N^{Tones}}}\sum_{n=0}^{1}w_{T_{SYM}}(t-nT_{SYM})\cdot \left(j\sum_{k=0}^{47}d_{k,n}\exp\left(j2\pi M(k)\Delta_F\left(t-nT_{SYM}-T_{GI}-T_{CS}^{i_{TX}}\right)\right)+p_{n+z}\sum_{k=-N_{SR}}^{N_{SR}}P_k\exp\left(j2\pi k\Delta_F\left(t-nT_{SYM}-T_{GI}-T_{CS}^{i_{TX}}\right)\right)\right)$
40MHz Tx on several streams – i_{TX}'th stream	$r_{HT\_SIG}^{i_{TX}}(t)=\frac{1}{\sqrt{N_{TX}\cdot N^{Tones}}}\sum_{n=0}^{1}w_{T_{SYM}}(t-nT_{SYM})\cdot \left(j\sum_{k=0}^{47}d_{k,n}\exp\left(j2\pi\left(M(k)-32\right)\Delta_F\left(t-nT_{SYM}-T_{GI}-T_{CS}^{i_{TX}}\right)\right)-\sum_{k=0}^{47}d_{k,n}\exp\left(j2\pi\left(M(k)+32\right)\Delta_F\left(t-nT_{SYM}-T_{GI}-T_{CS}^{i_{TX}}\right)\right)+p_{n+z}\sum_{k=-N_{SR}}^{N_{SR}}P_k\exp\left(j2\pi(k-32)\Delta_F\left(t-nT_{SYM}-T_{GI}-T_{CS}^{i_{TX}}\right)\right)+jp_{n+z}\sum_{k=-N_{SR}}^{N_{SR}}P_k\exp\left(j2\pi(k+32)\Delta_F\left(t-nT_{SYM}-T_{GI}-T_{CS}^{i_{TX}}\right)\right)\right)$

Table 9 - Modulation for the High Throughput Signal Field in a Green Field Packet

Modulation Method	Conversion to Time Domain signal
20MHz transmission - i_{TX} 'th stream	$r_{HT-SIG}^{i_{TX}}(t)=\frac{1}{\sqrt{N_{STS}\cdot N^{Tones}}}\sum_{n=0}^{1}w_{T_{SYM}}(t-nT_{SYM})\cdot \left(j\sum_{k=0}^{47}\sum_{i_{STS}=1}^{N_{STS}}\left[Q_{M(k)}\right]_{i_{TX},i_{STS}}\left[P_{HTLTF}\right]_{i_{STS},1}d_{k,n}\exp\left(j2\pi M(k)\Delta_F\left(t-nT_{SYM}-T_{GI}-T_{CS}^{i_{STS}}\right)\right)+p_{n+z}\sum_{k=-N_{SR}}^{N_{SR}}\sum_{i_{STS}=1}^{N_{STS}}\left[Q_k\right]_{i_{TX},i_{STS}}\left[P_{HTLTF}\right]_{i_{STS},1}P_k\exp\left(j2\pi k\Delta_F\left(t-nT_{SYM}-T_{GI}-T_{CS}^{i_{STS}}\right)\right)\right)$

Exhibit 1015
Ericsson Inc. v. Woodbury Wireless LLC
Page 000029

40MHz Tx on several streams – i_{TX}'th stream	$r_{HT-SIG}^{i_{TX}}(t)=\frac{1}{\sqrt{N_{STS}\cdot N^{Tones}}}\sum_{n=0}^{1}w_{T_{SYM}}(t-nT_{SYM})\cdot$ $\Big(j\sum_{k=0}^{47}\sum_{i_{STS}=1}^{N_{STS}}\left[Q_{M(k)-32}\right]_{i_{TX},i_{STS}}\left[P_{HTLTF}\right]_{i_{STS},1}d_{k,n}\exp\left(j2\pi\left(M(k)-32\right)\Delta_F\left(t-nT_{SYM}-T_{GI}-T_{CS}^{i_{STS}}\right)\right)$ $-\sum_{k=0}^{47}\sum_{i_{STS}=1}^{N_{STS}}\left[Q_{M(k)+32}\right]_{i_{TX},i_{STS}}\left[P_{HTLTF}\right]_{i_{STS},1}d_{k,n}\exp\left(j2\pi\left(M(k)+32\right)\Delta_F\left(t-nT_{SYM}-T_{GI}-T_{CS}^{i_{STS}}\right)\right)$ $+p_{n+z}\sum_{k=-N_{SR}}^{N_{SR}}\sum_{i_{STS}=1}^{N_{STS}}\left[Q_{k-32}\right]_{i_{TX},i_{STS}}\left[P_{HTLTF}\right]_{i_{STS},1}P_k\exp\left(j2\pi\left(k-32\right)\Delta_F\left(t-nT_{SYM}-T_{GI}-T_{CS}^{i_{STS}}\right)\right)$ $+jp_{n+z}\sum_{k=-N_{SR}}^{N_{SR}}\sum_{i_{STS}=1}^{N_{STS}}\left[Q_{k+32}\right]_{i_{TX},i_{STS}}\left[P_{HTLTF}\right]_{i_{STS},1}P_k\exp\left(j2\pi\left(k+32\right)\Delta_F\left(t-nT_{SYM}-T_{GI}-T_{CS}^{i_{STS}}\right)\right)\Big)$

$M(k), p_n, P_k$ are defined in section 17.3.5.9 of the 802.11a standard. [1]

N^{Tones} is equal to the number of tones in the HT-SIG.

The value of *z* is zero in a GF packet and 1 in a mixed mode packets.

Values for $T_{CS}^{i_{TX}}$ are taken from Table 4 in the case of MM. In the case of a GF packet the values of $T_{CS}^{i_{STS}}$ are taken from Table 6.

P_{HTLTF} is defined is section 3.6.5.

Q_k is defined in section 4.7.1.

The value of N_{SR} used in these equations, both for 20MHz and 40MHz, is 26 tones.

Note: this definition results in a BPSK modulation in which the constellation of the data tones is rotated by 90º relative to the legacy signal field.

Exhibit 1015
Ericsson Inc. v. Woodbury Wireless LLC
Page 000030

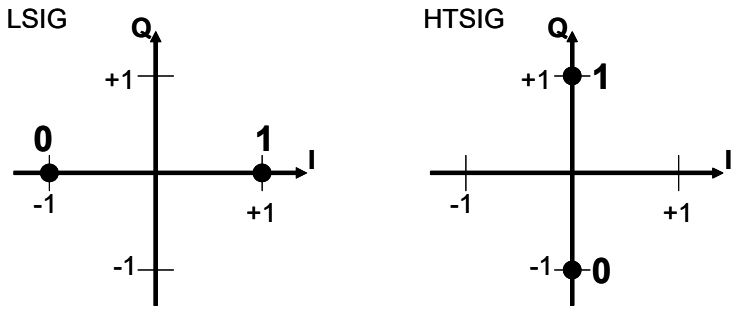

Figure 6 - constellation for the legacy signal field and the HT signal field

3.6.3 CRC calculation

The CRC protects bits 0-33 of the HT-SIG. The value of the CRC field is the ones complement of

$crc(D)=M(D)D^8$ modulo $G(D)$

where the shift register is initialized to all ones and

$M(D)=m_0D^{k-1}+m_1D^{k-2}+\ldots+m_{k-2}D+m_{k-1}$ is the HT-SIG represented as polynomial where m_0 is bit 0 of HT-SIG1 and m_{33} is bit 9 of HT-SIG2,

$G(D)=D^8+D^2+D+1$ is the CRC generating polynomial, and

$crc(D)=c_0D^7+c_1D^6+\ldots+c_6D+c_7$

The CRC field is transmitted with c_7 first

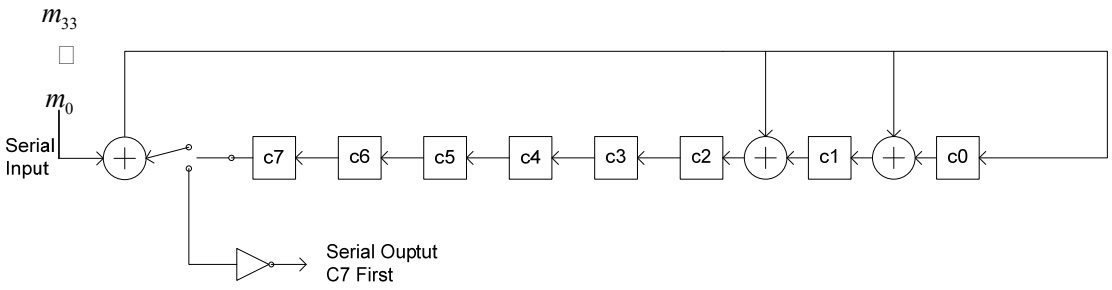

Figure 7 - HT-SIG CRC calculation

Exhibit 1015
Ericsson Inc. v. Woodbury Wireless LLC
Page 000031

Figure 7 shows the operation of the CRC. First the shift register is reset to all ones. The bits are then passed through the XOR at the input. When the last bit have entered, the bits are outputted, C7 first, through an inverter.

3.6.4 The HT STF training symbol

The purpose of the HT STF training field is to improve AGC training in a multi-transmit and multi-receive system. The duration of the HT-STF is 4μsec; the frequency sequence used to construct the HT-STF in 20MHz transmission is identical to legacy STF; in 40MHz transmission the HT-STF is constructed from the 20MHz version by frequency shifting and duplicating, and rotating the upper sub-carriers by 90°. The frequency sequences are:

For 20MHz:

$$HTS_{-28,28} = \sqrt{1/2}\ \{0,0,0,0,1+j,0,0,0,-1-j,0,0,0,1+j,0,0,0,-1-j,0,0,0,-1-j,0,0,0,1+j,0,0,0,$$
$$0,0,0,0,-1-j,0,0,0,-1-j,0,0,0,1+j,0,0,0,1+j,0,0,0,1+j,0,0,0,1+j,0,0,0,0\}$$

The HT-STF in 40MHz is based on:

$$HTS_{-58,58} = \sqrt{1/2}\,\{0,0,1+j,0,0,0,-1-j,0,0,0,1+j,0,0,0,-1-j,0,0,0,-1-j,0,0,0,1+j,0,0,0,$$
$$0,0,0,0,-1-j,0,0,0,-1-j,0,0,0,1+j,0,0,0,1+j,0,0,0,1+j,0,0,0,1+j,0,0,0,0,0,$$
$$0,0,0,0,0,0,0,0,0,0,1+j,0,0,0,-1-j,0,0,0,1+j,0,0,0,-1-j,0,0,0,-1-j,0,0,0,+1+j,$$
$$0,0,0,0,0,0,0,-1-j,0,0,0,-1-j,0,0,0,1+j,0,0,0,1+j,0,0,0,1+j,0,0,0,+1+j,0,0\}$$

The time domain representation of the transmission in the i_{TX} *'th* transmit chain is:

$$r_{HT-STF}^{i_{TX}}(t) = w_{\mathrm{T}_{HT-STF}}(t)\frac{1}{\sqrt{N_{STS}N_{HT-STF}^{Tones}}}\mathrm{g}$$
$$\left(\sum_{k=-N_{SR}}^{0}\sum_{i_{STS}=1}^{N_{STS}}\left[Q_k\right]_{i_{TX},i_{STS}} HTS(k)\exp\left(j2\pi k\Delta_F\left(t-T_{CS}^{i_{STS}}\right)\right)\right.$$
$$\left.+\Upsilon\sum_{k=1}^{N_{SR}}\sum_{i_{STS}=1}^{N_{STS}}\left[Q_k\right]_{i_{TX},i_{STS}} HTS(k)\exp\left(j2\pi k\Delta_F\left(t-T_{CS}^{i_{STS}}\right)\right)\right)$$

Exhibit 1015
Ericsson Inc. v. Woodbury Wireless LLC
Page 000032

The value of Υ is 1 for 20MHz and j in 40MHz. The values for $T_{CS}^{i_{STS}}$ are given in Table 6. Q_k is defined in section 4.7.1.

3.6.5 The HT-LTF long training Field

The HT long training field provides means for the receiver to estimate the channel between each spatial mapper input (or spatial stream transmitter if no STBC is applied) and receive chain; the number of training symbols N_{LTF} is equal or greater than the number of space time streams (with an exception in the case of 3 space time streams). The number of training symbols is greater than the number of space time streams if the transmitter is providing training for more spatial streams (spatial mapper inputs) than the number used for the transmission of the PSDU. This happens in a sounding PPDU.

The HT long training field portion has one or two parts. The first part consists of from one to four HT long training fields (HT-LTFs) that are necessary for demodulation of the HT-Data portion of the PPDU. These HT-LTFs are referred to as Data HT-LTFs. The optional second part consists of from zero to four HT-LTFs that may be used to probe extra spatial dimensions of the MIMO channel that are not utilized by the HT-Data portion of the PPDU. These HT-LTFs are referred to as Extension HT-LTFs. If a receiver has not advertised its ability to receive Extension HT-LTFs, it may discard a frame including Extension HT-LTFs as an unknown frame type. The number of Data HT-LTFs is denoted N_{DLTF}. The number of extension HT-LTFs is denoted N_{ELTF}. The total number of HT-LTFs is $N_{LTF} = N_{DLTF} + N_{ELTF}$.

N_{LTF} shall not exceed 5.

Table 10 shows the determination of the number of space time streams from the MCS and STBC HT-SIG fields. Table 11 shows the number of data and extension LTFs as a function of either number of space time streams N_{STS} or number of extension spatial streams N_{ESS}.

Exhibit 1015
Ericsson Inc. v. Woodbury Wireless LLC
Page 000033

Number of Spatial Streams (from MCS) N_{SS}	STBC field	Number of space time streams N_{STS}
1	0	1
1	1	2
2	0	2
2	1	3
2	2	4
3	0	3
3	1	4
4	0	4

Table 10 - Determining the number of space time streams

N_{STS} or N_{ESS}	N_{DLTF} or N_{ELTFs}
1	1
2	2
3	4
4	4

Table 11 - Number of LTFs required to probe spatial streams

When Extension HT-LTFs are used, the result is referred to as a segmented HT-LTF. When a PPDU includes a segmented HT-LTF, or if the number of LTF is greater than the number of space time streams it is optional for a receiver to decode the data portion of the PPDU.

The following HT-LTF sequence is transmitted in the case of 20MHz operation:

$$HTLTF_{-28:28} = \begin{bmatrix} 1,1,1,1,-1,-1,1,1,-1,1,-1,1,1,1,1,1,1,-1,-1,1,1,-1,1,-1,1,1,1,1,0, \\ 1,-1,-1,1,1,-1,1,-1,1,-1,-1,-1,-1,-1,1,1,-1,-1,1,-1,1,-1,1,1,1,1,-1,-1 \end{bmatrix}$$

Note that this sequence is an extension of the legacy LTF where the 4 extra sub-carriers are filled with +1 for negative frequencies and -1 for positive frequencies

In a 40MHz transmission the sequence to be transmitted is based on:

Exhibit 1015
Ericsson Inc. v. Woodbury Wireless LLC
Page 000034

$$
\begin{aligned}
HTLTF_{-58,58} = \{ & 1,1,-1,-1,1,1,-1,1,-1,1,1,1,1,1,1,-1,-1,1,1,-1,1,-1,1,1,1,1,1, \\
& 1,-1,-1,1,1,-1,1,-1,1,-1,-1,-1,-1,-1,1,1,-1,-1,1,-1,1,-1,1,1,1,1,-1,-1,-1,1,0 \\
& 0,0,-1,1,1,-1,1,1,-1,-1,1,1,-1,1,-1,1,1,1,1,1,1,-1,-1,1,1,-1,1,-1,1,1,1,1,1, \\
& 1,-1,-1,1,1,-1,1,-1,1,-1,-1,-1,-1,-1,1,1,-1,-1,1,-1,1,-1,1,1,1,1 \}
\end{aligned}
$$

Note that this sequence is also constructed by extending the legacy LTF in the following way: first of all, the legacy LTF is shifted and duplicated as explained in 3.5.3 for the duplicate legacy mode; then the missing sub-carriers are filled: sub-carriers [-32 -5 -4 -3 -2 2 3 4 5 32] are filled with the values [1 -1 -1 -1 1 -1 1 1 -1 1] respectively.

This sequence is used even if the HT-duplicate mode (MCS 32) is used in the data.

The duration of each long training field HT-LTF is 4 µsec and it consists of a single occurance of the sequence plus a GI insertion. An exception is the first HT-LTF in a GF packet which is 8µsec long consisting of two instances of the sequence plus a double GI insertion. In case of multiple space time streams cyclic shift is invoked as specified in Table 6

The generation of Data HT-LTFs is shown in Figure 8. The generation of Extension HT-LTFs is shown in Figure 9. In these figures, and in the following text, the following notational conventions are used:

- $[Q]_{m,n}$ indicates the element of in row m and column n of matrix Q
- $[Q]_{N}$ indicates a matrix consisting of the first N columns of matrix Q
- $[Q]_{M:N}$ indicates a matrix consisting of columns M through N of matrix Q

Exhibit 1015
Ericsson Inc. v. Woodbury Wireless LLC
Page 000035

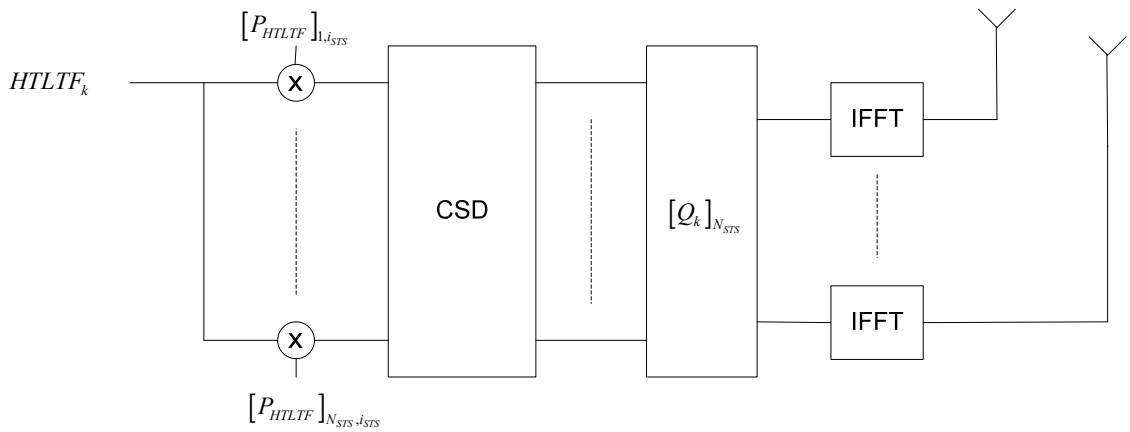

Figure 8 - Generation of data HT-LTFs

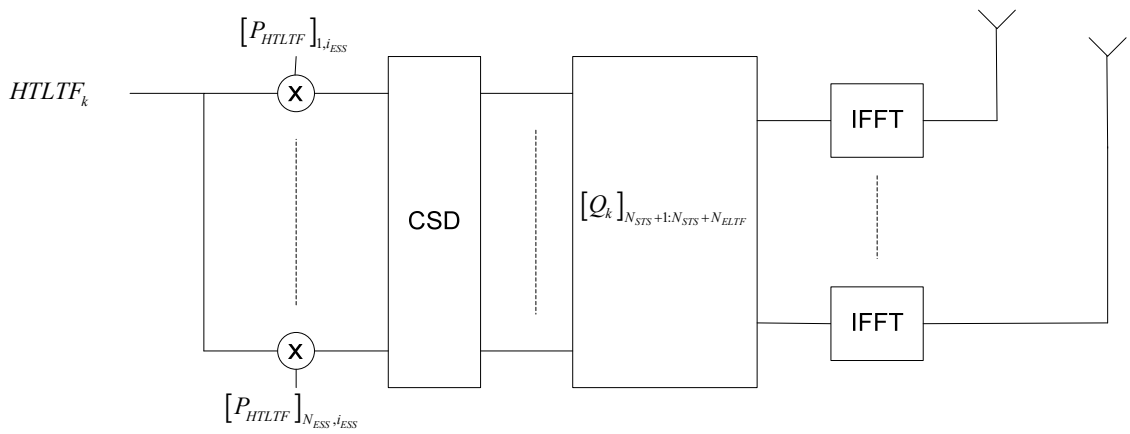

Figure 9 - Generation of the extension HT-LTFs

The mapping between space time streams and transmit chains is defined by the columns of an antenna map matrix Q_k for subcarrier k. The first N_{STS} columns define the space time streams used for data transmission, and the next N_{ESS} columns (up to $N_{TX} - N_{STS}$ columns) define the extension spatial streams. Thus, for the purpose of defining HT-LTFs, Q_k is an $N_{TX} \times N_{TX}$ dimension matrix. Columns $1\text{L}\ N_{STS}$ of Q_k are excited by the Data HT-LTFs and columns $N_{STS}+1\text{L}\ N_{STS}+N_{ESS}$ are excited by the Extension HT-LTFs, where $N_{STS}+N_{ESS} \le N_{TX}$ is the total number of spatial streams being probed by the HT-LTFs. Q_k may be an identity matrix, in the case of direct-mapped MIMO. Q_k shall not be an indentity matrix when extension HT-LTFs are present ($N_{ESS} > 0$). Other limitations on Q_k are specified in sub clause 4.7.1

Exhibit 1015
Ericsson Inc. v. Woodbury Wireless LLC
Page 000036

The time domain representation of the waveform transmitted in the ith transmit chain during the nth data HT-LTF ($1 \le n \le N_{DLTF}$) is:

$$r_{HT-LTF}^{n,i_{TX}}(t) = w_{T_{HT-LTFs}}(t)\sqrt{\frac{1}{N_{STS} \cdot N_{HT-LTF}^{Tone}}} \cdot$$
$$\left(\sum_{k=-N_{SR}}^{0} \sum_{i_{STS}=1}^{N_{STS}} [Q_k]_{i_{TX},i_{STS}} P_{HTLTF}(i_{STS},n) HTLTF(k) \exp\left(j2\pi k\Delta_F \left(t - \alpha T_{GI} - T_{CS}^{i_{STS}} \right) \right) + \right.$$
$$\left. \Upsilon \sum_{k=1}^{N_{SR}} \sum_{i_{STS}=1}^{N_{STS}} [Q_k]_{i_{TX},i_{STS}} P_{HTLTF}(i_{STS},n) HTLTF(k) \exp\left(j2\pi k\Delta_F \left(t - \alpha T_{GI} - T_{CS}^{i_{STS}} \right) \right) \right)$$

and it is

$$r_{HT-LTF}^{n,i_{TX}}(t) = w_{T_{HT-LTFs}}(t)\sqrt{\frac{1}{N_{HT-LTF}^{Tone} N_{ESS}}} \cdot$$
$$\left(\sum_{k=-N_{SR}}^{0} \sum_{i_{ESS}=1}^{N_{ESS}} [Q_k]_{i_{TX},N_{STS}+i_{ESS}} P_{HTLTF}(i_{ESS},n-N_{DLTF}) HTLTF(k) \exp\left(j2\pi k\Delta_F \left(t - T_{GI} - T_{CS}^{i_{ESS}} \right) \right) + \right.$$
$$\left. \Upsilon \sum_{k=1}^{N_{SR}} \sum_{i_{ESS}=1}^{N_{ESS}} [Q_k]_{i_{TX},N_{STS}+i_{ESS}} P_{HTLTF}(i_{ESS},n-N_{DLTF}) HTLTF(k) \exp\left(j2\pi k\Delta_F \left(t - T_{GI} - T_{CS}^{i_{ESS}} \right) \right) \right)$$

for the extension HT-LTFs $(N_{DLTF} < n \le N_{LTF})$.

The HT-LTF mapping matrix P_{HTLTF} is:

$$P_{HTLTF} = \begin{pmatrix} 1 & -1 & 1 & 1 \\ 1 & 1 & -1 & 1 \\ 1 & 1 & 1 & -1 \\ -1 & 1 & 1 & 1 \end{pmatrix}$$

Where Υ is 1 for 20MHz and j in 40MHz. The value of α is 1 for mixed mode and 2 for the first HT-LTF in green field mode. The values for $T_{CS}^{i_{STS}}$ are given in Table 6. Q_k is defined in section 4.7.1.

4 The Data Field

The data field includes the service field, the PSDU, the pad bits, and the tail bits.

The number of symbols in the data field when BCC encoding is used is computed using the formula:

Exhibit 1015
Ericsson Inc. v. Woodbury Wireless LLC
Page 000037

$$N_{SYM} = m_{STBC} \left\lceil \frac{8 \cdot length + 16 + 6 \cdot N_{ES}}{m_{STBC} \cdot N_{DBPS}} \right\rceil$$

Where m_{STBC} is 2 if STBC is used and 1 otherwise (making sure that the number of symbols is even when STBC is used.) The number of "zero" pad bits is thus $N_{SYM} \cdot N_{DBPS} - length \cdot 8 - 16 - 6N_{ES}$. The number of symbols in the data field when LDPCC encoding is used is described in section 4.3.3.4.

4.1 The service field

The service field is used for scrambler initialization. The service field will be composed of 16bits, all set to zero before scrambling. In legacy and legacy duplicate transmission the service field will be the same as in section 17.3.5.1 of the 11a standard. In HT modes, the service field is composed of 16 zeros bits, scrambled by the scrambler, as defined in the next section.

4.2 Scrambler

The data field is scrambled by the scrambler defined in section 17.3.5.4 of the 802.11a standard [1].

4.3 Coding

The data are encoded using the convolutional encoder defined in section 17.3.5.5 of the 802.11a standard [1]. A single FEC encoder is used when the PHY rate is less than or equal 300Mbps or when LDPCC ECC is used; When BCC FEC encoder is used, two encoders will be used when the PHY rate is greater than 300Mbps. The operation of the BCC FEC is described in sections 4.3.1 and 4.3.2. The operation of the LDPCC ECC is described in sections 4.3.3.

4.3.1 Encoder Parsing operation

If two encoders are used, the data scrambled bits are divided between the encoders by sending alternating bits to different encoders. The ith bit to the jth encoder, denoted $x_i^{(j)}$, is:

$$x_i^{(j)} = b_{N_{ES} \cdot i + j} \quad ; \quad 0 \le j \le N_{ES} - 1$$

Following the parsing operation, 6 scrambled "zero" bits following the end of the message bits in each FEC input sequence are replaced by unscrambled "zero" bits, as described in 17.3.5.2 of the 802.11a standard [1].

The replaced bits are:

Exhibit 1015
Ericsson Inc. v. Woodbury Wireless LLC
Page 000038

$$x_i^{(j)} \quad : \quad 0 \le j \le N_{ES} - 1 \quad ; \quad \frac{length \cdot 8 + 16}{N_{ES}} \le i \le \frac{length \cdot 8 + 16}{N_{ES}} + 5$$

4.3.2 Coding and puncturing

The encoder parser output sequences $\{x_i^0\}$ and $\{x_i^1\}$ where applicable will each be encoded by a rate ½ convolutional encoder defined in section 17.3.5.5 of the 802.11a standard [1]. After encoding, the encoded data will be punctured by the method defined in section 17.3.5.6 of the 802.11a standard to achieve the rate selected by the modulation and coding scheme.

In the case that rate 5/6 coding is selected, the puncturing scheme is as follows:

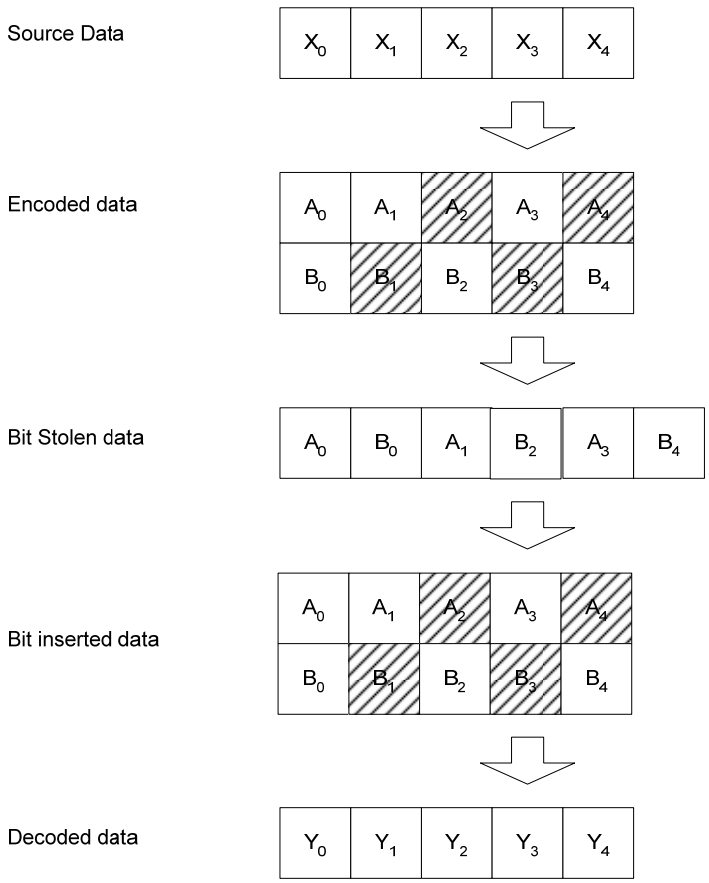

Figure 10 - Puncturing at rate 5/6

4.3.3 Low density parity check codes (optional ECC)

This subclause describes the LDPCCs to be optionally used in the HT system as high-performance ECC technique, instead of the convolutional code (4.3.2). The

Exhibit 1015
Ericsson Inc. v. Woodbury Wireless LLC
Page 000039

rate-dependent parameters in tables A1 through A15 in appendix A shall still apply.

4.3.3.1 LDPCC Code Rates and Codeword Block Lengths

The supported code rates, information block lengths, and codeword block lengths are described in Table 12**Error! Reference source not found.**.

Table 12 - LDPCC Parameters

Code rate (R)	LDPC information block length (bits)	LDPC codeword block length (bits)
1/2	972	1944
1/2	648	1296
1/2	324	648
2/3	1296	1944
2/3	864	1296
2/3	432	648
3/4	1458	1944
3/4	972	1296
3/4	486	648
5/6	1620	1944
5/6	1080	1296
5/6	540	648

4.3.3.2 LDPCC Encoder

For each of the three available codeword block lengths, the proposed LDPCC supports rate-1/2, rate-2/3, rate-3/4 and rate-5/6 encoding. The LDPCC encoder is systematic, i.e. it encodes an information block of size *k*, $\mathrm{I} = (i_0, i_1, \mathrm{K}\ i_{k-1})$ into a

Exhibit 1015
Ericsson Inc. v. Woodbury Wireless LLC
Page 000040

codeword $\mathbf{c}$ of size n, $\mathbf{c}=(i_0, i_1, \ldots i_{k-1}, p_0, p_1, \ldots, p_{n-k-1})$, by adding $n-k$ parity bits obtained so that $\mathbf{H} \cdot \mathbf{c}^T = \mathbf{0}$, where $\mathbf{H}$ is an $(n-k)$x n parity-check matrix. The selection of the codeword blocklength (n) is achieved via the LDPC PPDU encoding process described in subclause **Error! Reference source not found.**.

4.3.3.3 Parity check matrices

Each of the proposed parity-check matrices can be partitioned into square subblocks (submatrices) of size $Z \times Z$. These submatrices are either cyclic-permutations of the identity matrix or null submatrices.

The cyclic-permutation matrix P_i is obtained from the $Z \times Z$ identity matrix by cyclically shifting the columns to the right by *i* elements. The matrix P_0 is the $Z \times Z$ identity matrix. **Error! Reference source not found.** illustrates examples (for a subblock size of 8 x 8) of cyclic-permutation matrices P_i.

$$P_0 = \begin{bmatrix} 1&0&0&0&0&0&0&0 \\ 0&1&0&0&0&0&0&0 \\ 0&0&1&0&0&0&0&0 \\ 0&0&0&1&0&0&0&0 \\ 0&0&0&0&1&0&0&0 \\ 0&0&0&0&0&1&0&0 \\ 0&0&0&0&0&0&1&0 \\ 0&0&0&0&0&0&0&1 \end{bmatrix}, P_1 = \begin{bmatrix} 0&1&0&0&0&0&0&0 \\ 0&0&1&0&0&0&0&0 \\ 0&0&0&1&0&0&0&0 \\ 0&0&0&0&1&0&0&0 \\ 0&0&0&0&0&1&0&0 \\ 0&0&0&0&0&0&1&0 \\ 0&0&0&0&0&0&0&1 \\ 1&0&0&0&0&0&0&0 \end{bmatrix}, P_5 = \begin{bmatrix} 0&0&0&0&0&1&0&0 \\ 0&0&0&0&0&0&1&0 \\ 0&0&0&0&0&0&0&1 \\ 1&0&0&0&0&0&0&0 \\ 0&1&0&0&0&0&0&0 \\ 0&0&1&0&0&0&0&0 \\ 0&0&0&1&0&0&0&0 \\ 0&0&0&0&1&0&0&0 \end{bmatrix}$$

Figure 11 - Examples of cyclic-permutation matrices with Z=8. The matrix P_i is produced by cyclically shifting the columns of the identity matrix to the right by *i* places.

Table B.1 of Appendix B displays the "matrix prototypes" of parity-check matrices for all four code rates at block length $n=648$ bits. The integer i denotes the cyclic-permutation matrix P_i, as illustrated in **Error! Reference source not found.**. Vacant entries of the table denote null (zero) submatrices.

Table B.2 of Appendix B displays the matrix prototypes of parity-check matrices for blocklength $n=1296$ bits, in the same fashion.

Table B.3 of Appendix B displays the matrix prototypes of parity-check matrices for blocklength $n=1944$ bits, in the same fashion.

Exhibit 1015
Ericsson Inc. v. Woodbury Wireless LLC
Page 000041

4.3.3.4 LDPCC PPDU encoding process

a) Compute the number of available bits in the minimum number of OFDM symbols in which the Data field of the packet may fit.

$$N_{pld} = \text{LENGTH} \times 8 + 16 \tag{20}$$

$$N_{\text{avbits}} = N_{\text{CBPS}} \times (1 + U_{\text{STBC}}) \times \text{ceil}\left(\frac{N_{\text{pld}}}{N_{\text{CBPS}} \times \text{R} \times (1 + U_{\text{STBC}})} \right), \tag{21}$$

where U_{STBC} equals 1 when STBC is used and 0 otherwise.

b) Compute the integer number of LDPCC codewords to be transmitted, N_{CW}, and the length of the codewords to be used, L_{LDPC} from **Error! Reference source not found.**.

Table 13 - PPDU Encoding Parameters

N_{avbits} **Range (bits)**	**Number of LDPCC codewords N_{CW}**	**LDPC codeword length L_{LDPC} (bits)**
$N_{\text{avbits}} \leq 648$	1	1296, if $N_{\text{avbits}} \geq N_{\text{pld}} + 912 \times (1-R)$ 648, otherwise
$648 < N_{\text{avbits}} \leq 1296$	1	1944, if $N_{\text{avbits}} \geq N_{\text{pld}} + 1464 \times (1-R)$ 1296, otherwise
$1296 < N_{\text{avbits}} \leq 1944$	1	1944
$1944 < N_{\text{avbits}} \leq 2592$	2	1944, if $N_{\text{avbits}} \geq N_{\text{pld}} + 2916 \times (1-R)$ 1296, otherwise
$2592 < N_{\text{avbits}}$	ceil(N_{pld} / (1944 × R))	1944

Exhibit 1015
Ericsson Inc. v. Woodbury Wireless LLC
Page 000042

c) Compute the number of shortening bits to be padded to the N_{pld} data bits before encoding

$$N_{\text{shrt}} = (N_{\text{CW}} \times L_{\text{LDPC}} \times R) - N_{\text{pld}} \tag{19}$$

The shortening bits shall be equally distributed over all N_{CW} codewords with the first $\text{rem}(N_{\text{shrt}}, N_{\text{CW}})$ codewords being shortened one bit more than the remaining codewords. All shortened bits shall be set to 0 on the right of the data bits in the systematic portion of the codeword corresponding to their locations in the parity check matrix. These shortened bits shall be discarded after encoding.

d) Compute the number of bits to be punctured from the codewords after encoding

$$N_{\text{punc}} = \max(0, (N_{\text{CW}} \times L_{\text{LDPC}}) - N_{\text{avbits}} - N_{\text{shrt}}) \tag{20}$$

If $\left(\left(N_{\text{punc}} > 0.1 \times N_{\text{CW}} \times L_{\text{LDPC}} \times (1-R)\right) \text{AND} \left(N_{\text{shrt}} < 1.2 \times N_{\text{punc}} \times R/(1-R)\right)\right)$ is true OR if $\left(N_{\text{punc}} > 0.3 \times N_{\text{CW}} \times L_{\text{LDPC}} \times (1-R)\right)$ is true, then increment N_{avbits} and recompute N_{punc} by the following:

$$N_{\text{avbits}} = N_{\text{avbits}} + N_{\text{CBPS}} \times (1 + U_{\text{STBC}}) \tag{21}$$

$$N_{\text{punc}} = \max(0, (N_{\text{CW}} \times L_{\text{LDPC}}) - N_{\text{avbits}} - N_{\text{shrt}}) \tag{22}$$

The punctured bits shall be equally distributed over all N_{CW} codewords with the first $\text{rem}(N_{\text{punc}}, N_{\text{CW}})$ codewords being punctured one bit more than the remaining codewords. These punctured bits shall be the right most parity portion of the codeword corresponding to their locations in the parity check matrix and shall be discarded after encoding. The number of OFDM symbols to be transmitted in the PPDU can be computed per:

$$N_{\text{SYM}} = N_{\text{avbits}} / N_{\text{CBPS}} \tag{23}$$

e) Compute the number of coded bits to be repeated

$$N_{\text{rep}} = \max(0, N_{\text{avbits}} - N_{\text{CW}} \times L_{\text{LDPC}} \times (1-R) - N_{\text{pld}}) \tag{24}$$

The number of coded bits to be repeated shall be equally distributed over all N_{CW} codewords with one more bit repeated for the first $\text{rem}(N_{\text{rep}}, N_{\text{CW}})$ codewords than for the remaining codewords. Note when puncturing occurs that coded bits are

Exhibit 1015
Ericsson Inc. v. Woodbury Wireless LLC
Page 000043

not repeated and vice versa. The coded bits to be repeated per codeword shall be copied (cyclically repeated when necessary) starting from the left most systematic data bits,continuing through the parity bits if necessary, all corresponding to their locations in the parity check matrix. These repeated bits are then concatenated to the codeword after the parity bits in their same order.

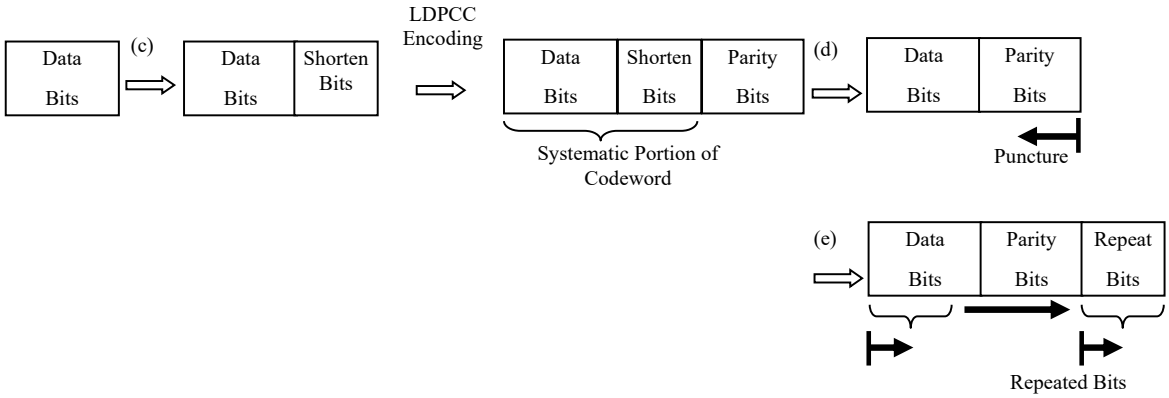

Figure 13 - LDPCC PPDU Encoding padding and puncturing of a single codeword

f) Encode the data per 4.3.3.2 and 4.3.3.3, using the number of shortening bits per codeword as computed in step c), and puncture or repeat bits per codeword as computed per step d) and e).

g) Aggregate all codewords and parse per **Error! Reference source not found.**4.3.3.5.

4.3.3.5 LDPC Parser

The LDPC shortened and punctured codewords that result from the encoding process shall be outputted in sequential fashion starting from the i_0th bit of the systematic portion of each encoded codeword outputted first. The parsing of this encoded data stream into spatial streams shall follow exactly the parsing rules defined for the BCC encoder, as defined in clause 4.4.1.

4.4 Data Interleaver

After coding and puncturing, the data bit stream at the output of the FEC encoders are re-arranged into blocks of N_{CBPSS} bits. This operation is referred to as “stream parsing” and is described in 4.4.1 below. Each of these blocks is then interleaved by an interleaver that is a modification of the 802.11a interleaver.

Exhibit 1015
Ericsson Inc. v. Woodbury Wireless LLC
Page 000044

4.4.1 Stream Parser

The number of bits assigned to a single axis (real or imaginary) in a constellation point in the i_{SS}^{th} spatial stream is denoted by $s(i_{SS}) = \max\left\{1, \frac{N_{BPSC}(i_{SS})}{2}\right\}$.

The sum of these over all streams is: $S = \sum_{i_{SS}=0}^{N_{SS}-1} s(i_{SS})$.

(Note that if equal MCS is used for all spatial streams this becomes $N_{SS} \cdot s$, where s is number of bits for an axis common to all streams).

Consecutive blocks of $s(i_{SS})$ bits are assigned to different spatial streams in a round robin fashion.

If two encoders are present, the output of each encoder is used alternately for each round robin cycle, i.e. at the beginning S bits from the output of first encoder are fed into all spatial streams, and then S bits from the output of second encoder are used and so on.

The kth input to the i_{SS}^{th} spatial stream is $y_i^{(j)}$, which is the ith output bit of the jth encoder, where:

$$j = \left\lfloor \frac{k}{s(i_{SS})} \right\rfloor \oplus N_{ES}$$

and

$$i = \sum_{i'=0}^{i_{SS}-1} s(i') + S \cdot \left\lfloor \frac{k}{N_{ES} \cdot s(i_{SS})} \right\rfloor + k \oplus s(i_{SS})$$

4.4.2 Frequency interleaver

The bits at the output of the stream parser are divided into block of N_{CBPSS}, each block is interleaved by an interleaver based on the 802.11a interleaver. This interleaver, which is based on entering the data in rows, and reading it out in columns, has a different number of columns and rows when a 20MHz channel is used and when a 40MHz channel is used. The numbers are described in the table below:

Exhibit 1015
Ericsson Inc. v. Woodbury Wireless LLC
Page 000045

Table 14 - Number of rows and columns in the interleaver

Parameter	20MHz	40MHz
N_{COL}	13	18
N_{ROW}	$4N_{BPSC}$	$6N_{BPSC}$
N_{ROT}	11	29

After the .11a like operations have been applied, if more than one spatial stream exists, a third operation called frequency rotation is applied to the additional spatial streams. The parameter for the frequency rotation is N_{ROT}.

An additional parameter is the spatial stream index i_{ss}=0,..,N_{SS}-1. The output of the third permutation is a function of the spatial stream index.

The interleaving is defined using three permutations. The first permutation is defined by the rule:

$$i = N_{ROW}\left(k \bmod N_{\mathrm{COL}}\right) + \mathrm{floor}\left(k / N_{\mathrm{COL}}\right) \qquad k = 0,1,\mathrm{K}\ , N_{\mathrm{CBPSS}} - 1$$

The second permutation is defined by the rule

$$j = s \times \mathrm{floor}\left(i / s\right) + \left(i + N_{\mathrm{CBPSS}} - \mathrm{floor}\left(N_{\mathrm{COL}} \times i / N_{\mathrm{CBPSS}}\right)\right) \bmod s \qquad i = 0,1,\mathrm{K}\ , N_{\mathrm{CBPSS}} - 1$$

The value of *s* is determined by the number of coded bits per sub carrier:

$$s = \max\left(N_{\mathrm{BPSC}} / 2, 1\right)$$

If more that one spatial stream exists, a frequency rotation is applied to the output of the second permutation

$$r = \left(j - \left(\left(i_{ss} \times 2\right) \bmod 3 + 3 \times \mathrm{floor}\left({}^{i_{ss}}\!/_{3} \right) \right) \times N_{ROT} \times N_{BPSC} \right) \bmod N_{CBPSS} \qquad j = 0,1,\mathrm{K}\ , N_{\mathrm{CBPSS}} - 1$$

where $i_{ss} = 0,1,\mathrm{K}\ , N_{ss} - 1$ is the index of the spatial steam on which this interleaver is operating.

The deinterleaver uses the following operations to perform the inverse rotation. We denote by *r* the index of the bit in the received block (per spatial stream). The first permutation reverses the third (frequency rotation) permutation of the interleaver

$$j = \left(r + \left(\left(i_{ss} \times 2\right) \bmod 3 + 3 \times \mathrm{floor}\left({}^{i_{ss}}\!/_{3} \right) \right) \times N_{ROT} \times N_{BPSC} \right) \bmod N_{CBPSS} \qquad r = 0,1,\mathrm{K}\ , N_{\mathrm{CBPSS}} - 1$$

The second permutation reverses the second permutation in the interleaver.

Exhibit 1015
Ericsson Inc. v. Woodbury Wireless LLC
Page 000046

$$i = s \times \text{floor}\left(j/s\right) + \left(j + \text{floor}\left(N_{COL} \times j / N_{\text{CBPSS}}\right)\right) \bmod s \qquad j = 0,1,\text{K}\ , N_{\text{CBPSS}} - 1$$

s is defined as above.

The third permutation reversed the first permutation of the interleaver:

$$k = N_{COL} \times i - \left(N_{CBPSS} - 1\right) \times \text{floor}\left(i / N_{ROW}\right) \qquad i = 0,1,\text{K}\ , N_{CBPSS} - 1$$

4.5 QAM Mapping

The mapping between bits at the output of the interleaver and complex constellation points for BPSK, QPSK, 16-QAM and 64-QAM follows exactly the rules defined in section 17.3.5.7 of the 802.11a standard [1].

The streams of complex numbers should be denoted as $d_{k,l,n}$, $k = 0,1,\text{K}\ , N_{\text{SD}} - 1$, $l = 1,\text{K}\ , N_{\text{SS}}$, $n = 0,1,\text{K}\ , N_{\text{SYM}} - 1$.

4.5.1 Space-Time-Block-Coding (STBC)

This subclause defines a set of optional robust transmission rates that are applicable only when N_{STS} is greater than N_{SS}. N_{SS} spatial streams are mapped to N_{STS} space time streams, which are mapped to N_{TX} transmit chains. These rates are based either on Space-Time Block Coding (STBC) or hybrid STBC / Spatial-Division-Multiplexing (SDM) schemes. When the use of STBC is indicated in HT-SIG STBC field, a symbol operation shall occur between the QAM mapper and the spatial mapper (see Figure 2) as defined in this clause.

Denote the complex modulator symbol transmitted on all data sub-carriers for stream *l* destined for the $(2n)^{\text{th}}$ and $(2n+1)^{\text{th}}$ OFDM symbol as $d_{k,l,2n}$ and $d_{k,l,2n+1}$ respectively where $n \in \{0,1,...\}$.

Table 15 indicates for each combination of N_{STS} and N_{SS} which modulator symbol shall be transmitted during OFDM symbol period $(2n)$ and $(2n+1)$ from space time stream $n_{\text{STS}} \in \{1,..,N_{\text{STS}}\}$ respectively and the MCS set with which this STBC coding may be combined.

Exhibit 1015
Ericsson Inc. v. Woodbury Wireless LLC
Page 000047

Table 15 - QAM mapper output to spatial Mapper input for STBC

N_{STS}	Bits 0-6 in HT SIG1 (MCS index)	N_{SS}	Bits 4–5 in HT SIG2 (STBC index)	n_{STS}	space time stream in OFDM symbol (2*n*)	space time stream in OFDM symbol (2*n*+1)
2	0-7, 32	1	1	1	$d_{k,1,2n}$	$d_{k,1,2n+1}$
				2	$-d^*_{k,1,2n+1}$	$d^*_{k,1,2n}$
3	8-15, 33-38	2	1	1	$d_{k,1,2n}$	$d_{k,1,2n+1}$
				2	$-d^*_{k,1,2n+1}$	$d^*_{k,1,2n}$
				3	$d_{k,2,2n}$	$d_{k,2,2n+1}$
4	8-15	2	2	1	$d_{k,1,2n}$	$d_{k,1,2n+1}$
				2	$-d^*_{k,1,2n+1}$	$d^*_{k,1,2n}$
				3	$d_{k,2,2n}$	$d_{k,2,2n+1}$
				4	$-d^*_{k,2,2n+1}$	$d^*_{k,2,2n}$
4	16-23, 39, 41, 43, 46, 48, 50	3	1	1	$d_{k,1,2n}$	$d_{k,1,2n+1}$
				2	$-d^*_{k,1,2n+1}$	$d^*_{k,1,2n}$
				3	$d_{k,2,2n}$	$d_{k,2,2n+1}$
				4	$d_{k,3,2n}$	$d_{k,3,2n+1}$

The *l*'th space time stream for the *k*'th data subcarrier of symbol *n* shall be denoted $\tilde{d}_{k,l,n}$. If no space time block coding is applied $\tilde{d}_{k,l,n} = d_{k,l,n}$ and $N_{STS}=N_{SS}$.

Note that the specific STBC schemes for single spatial streams $N_{SS}=1$ with $N_{TX}=3$ or $N_{TX}=4$ are not detailed in this section since they are covered through the use of spatial expansion as detailed section 4.7.1.

Exhibit 1015
Ericsson Inc. v. Woodbury Wireless LLC
Page 000048

4.6 Pilot Subcarriers

In the case of 20MHz 4 pilot tones are inserted, pilot signals are inserted in the same sub-carriers used in 802.11a standard, i.e. in sub-carriers -21, -7, 7 and 21; the pilot sequence for the *n*[th] symbols and $i_{STS}{}^{th}$ space time stream is defined as follows:

$$P_{(i_{STS},n)}^{-28,28} = \{0,0,0,0,0,0,0,\Psi_{i_{STS},n\oplus 4}^{(N_{STS})},0,0,0,0,0,0,0,0,0,0,0,0,0,0,0,\Psi_{i_{STS},(n+1)\oplus 4}^{(N_{STSI})},0,0,0,0,0,0,0,0,$$
$$0,0,0,0,0,0,\Psi_{i_{STS},(n+2)\oplus 4}^{(N_{STS})},0,0,0,0,0,0,0,0,0,0,0,0,0,0,0,\Psi_{i_{STS},(n+3)\oplus 4}^{(N_{STS})},0,0,0,0,0,0,0,0\}, \quad (22)$$

In the case of 40MHz transmission pilot signals are inserted in sub-carriers -53, -25, -11, 11, 25, 53; the pilot sequence for the nth symbols and $i_{STS}{}^{th}$ space time stream is defined as follows:

$$P_{i_{STS}}^{(-58..58,n)} = \{0,0,0,0,0,\Psi_{i_{STS},n\oplus 6}^{(N_{STS})},0,0,0,0,0,0,0,0,0,0,0,0,0,0,0,0,0,0,0,0,0,0,0,0,0,0,0,0,0,0,$$
$$\Psi_{i_{STS},(n+1)\oplus 6}^{(N_{STS})},0,0,0,0,0,0,0,0,0,0,0,0,0,0,\Psi_{i_{STS},(n+2)\oplus 6}^{(N_{STS})},0,0,0,0,0,0,0,0,0,0,0,0,0,0,0,0,0,0,0,0,0,0,$$
$$0,\Psi_{i_{STS},(n+3)\oplus 6}^{(N_{STS})},0,0,0,0,0,0,0,0,0,0,0,0,0,0,\Psi_{i_{STS},(n+4)\oplus 6}^{(N_{STS})},0,0,0,0,0,0,0,0,0,0,0,0,0,0,0,0,0,0,0,$$
$$0,0,0,0,0,0,0,0,0,0,\Psi_{i_{STS},(n+5)\oplus 6}^{(N_{STS})},0,0,0,0,0\}$$

, (23)

Where $n \oplus 4$ indicates symbol number modulo 4;

Note that for each space time stream there is a different pilot pattern and the pilot patterns are cyclically rotated over symbols.

The basic patterns are also different according to the total number of space time streams for the packet.

The patterns $\Psi_{i_{STS},n}^{(N_{STS})}$ are defined in the following tables The first table (Table 16) defines the values for 20MHz transmission and the second table (Table 17) defines the values for 40MHz transmission

Table 16 - pilot values for 20MHz transmission

N_{STS}	i_{STS}	$\Psi_{i_{STS},0}^{(N_{STS})}$	$\Psi_{i_{STS},1}^{(N_{STS})}$	$\Psi_{i_{STS},2}^{(N_{STS})}$	$\Psi_{i_{STS},3}^{(N_{STS})}$
1	0	1	1	1	-1
2	0	1	1	-1	-1
2	1	1	-1	-1	1

Exhibit 1015
Ericsson Inc. v. Woodbury Wireless LLC
Page 000049

3	0	1	1	-1	-1
3	1	1	-1	1	-1
3	2	-1	1	1	-1
4	0	1	1	1	-1
4	1	1	1	-1	1
4	2	1	-1	1	1
4	3	-1	1	1	1

Table 17 - Pilots values for 40MHz transmission

N_{STS}	i_{STS}	$\Psi^{(N_{STS})}_{i_{STS},0}$	$\Psi^{(N_{STS})}_{i_{STS},1}$	$\Psi^{(N_{STS})}_{i_{STS},2}$	$\Psi^{(N_{STS})}_{i_{STS},3}$	$\Psi^{(N_{STS})}_{i_{STS},4}$	$\Psi^{(N_{STS})}_{i_{STS},5}$
1	0	1	1	1	-1	-1	1
2	0	1	1	-1	-1	-1	-1
2	1	1	1	1	-1	1	1
3	0	1	1	-1	-1	-1	-1
3	1	1	1	1	-1	1	1
3	2	1	-1	1	-1	-1	1
4	0	1	1	-1	-1	-1	-1
4	1	1	1	1	-1	1	1
4	2	1	-1	1	-1	-1	1
4	3	-1	1	1	1	-1	1

In the duplicate mode there are 8 pilots in the bins -53, -39, -25, -11, 11, 25, 39, 53.

The pilot values are the same as the values on bins -21, -7, 7, 21 in the 20MHz mode, repeated on the negative and positive bins and rotated in the upper bins.

4.7 OFDM Modulation

The time domain signal is composed from the stream of complex numbers

$$\tilde{d}_{k,l,n},\ k = 0,1,\ldots,N_{SD}-1,\ l = 1,\ldots,N_{STS},\ n = 0,1,\ldots,N_{SYM}-1$$

Exhibit 1015
Ericsson Inc. v. Woodbury Wireless LLC
Page 000050

and from the pilot signals. In the case of 40MHz transmission the upper sub-carriers are rotated 90° relative to the lower subcarriers

4.7.1 Spatial Mapping

The transmitter may choose to rotate and/or scale the space time block coder output vector (or the QAM mapper output vector if no space time block coding was applied). This is useful in the following cases:

- There are more transmit chains than space time streams. $N_{STS} < N_{TX}$
- As part of (an optional) sounding packet.
- As part of (an optional) calibration procedure
- When the packet is in (an optional) beam forming mode.

If the data to be transmitted on subcarrier k on space time stream i_{STS} is $X_k^{i_{STS}}$ then the transmitted data on the i_{TX} 'th transmit chain shall be.

$$r_{Field}^{(i_{TX})}(t) = \frac{1}{\sqrt{N_{STS} \cdot N_{Field}^{Tone}}} w_{T_{Field}}(t) \sum_k \sum_{i_{STS}=1}^{N_{STS}} [Q_k]_{i_{TX} i_{STS}} X_k^{(i_{STS})} \exp\left(j 2\pi k \Delta_F \left(t - T_{CS}^{i_{STS}} \right) \right)$$

where $[Q_k]_{i_{TX}, i_{STS}}$ is the element in the i_{TX} 'th row and i_{STS} 'th column in a matrix Q_k with N_{TX} rows and N_{STS} columns. Q_k may be frequency dependent.

There are several typical matrices that can be used:

- Direct mapping – in this case Q_k is a diagonal matrix of unit magnitude complex values that can take two forms:
  - $Q_k = \mathbf{I}$, the identity matrix
  - A CSD matrix in which the diagonal elements represent cyclic shift in the time domain: $[Q_k]_{i,i} = \exp(-j2\pi k \Delta_F \tau_{CS}^i)$
- Spatial Expansion – In this case Q_k is the product of a CSD matrix and a square matrix formed of orthogonal columns. As an illustration:
  - Q_k may be the product of a CSD matrix and a square unitary matrix such as the Hadamard matrix or the Fourier matrix. Sounding PPDUs using spatial expansion shall use unitary Q_k.
  - the spatial expansion may be performed by duplicating some of the N_{STS} streams to form the N_{TX} streams, each stream being scaled by the following normalization factor $\sqrt{\frac{N_{STS}}{N_{TX}}}$ by using for instance one of the following matrices multiplied by a CSD matrix and possibly by any square unitary matrix:

Exhibit 1015
Ericsson Inc. v. Woodbury Wireless LLC
Page 000051

- N_{TX}=2, N_{STS}=1 $[Q_k]_{N_{STS}} = \frac{1}{\sqrt{2}}[1 \quad 1]^T$
- N_{TX}=3, N_{STS}=1 $[Q_k]_{N_{STS}} = \frac{1}{\sqrt{3}}[1 \quad 1 \quad 1]^T$
- N_{TX}=4, N_{STS}=1 $[Q_k]_{N_{STS}} = \frac{1}{2}[1 \quad 1 \quad 1 \quad 1]^T$
- N_{TX}=3, N_{STS}=2 $[Q_k]_{N_{STS}} = \sqrt{\frac{2}{3}}\begin{bmatrix} 1 & 0 \\ 0 & 1 \\ 1 & 0 \end{bmatrix}$
- N_{TX}=4, N_{STS}=2 $[Q_k]_{N_{STS}} = \frac{1}{\sqrt{2}}\begin{bmatrix} 1 & 0 \\ 0 & 1 \\ 1 & 0 \\ 0 & 1 \end{bmatrix}$
- N_{TX}=4, N_{STS}=3 $[Q_k]_{N_{STS}} = \frac{\sqrt{3}}{2}\begin{bmatrix} 1 & 0 & 0 \\ 0 & 1 & 0 \\ 0 & 0 & 1 \\ 1 & 0 & 0 \end{bmatrix}$

- Different Spatial Expansions over sub-carriers – in which case the smoothing bit should be set to 0 and used in MM only:
  - N_{TX}=2, N_{STS}=1 $[Q_k]_{N_{STS}} = [1 \quad 0]^T \; or \; [Q_k]_{N_{STS}} = [0 \quad 1]^T$
  - N_{TX}=3, N_{STS}=2 $[Q_k]_{N_{STS}} = \begin{bmatrix} 1 & 0 \\ 0 & 0 \\ 0 & 1 \end{bmatrix}, \begin{bmatrix} 1 & 0 \\ 0 & 1 \\ 0 & 0 \end{bmatrix} or \begin{bmatrix} 0 & 0 \\ 1 & 0 \\ 0 & 1 \end{bmatrix}$
  - N_{TX}=4, N_{STS}=2 $[Q_k]_{N_{STS}} = \begin{bmatrix} 1 & 0 \\ 0 & 0 \\ 0 & 0 \\ 0 & 1 \end{bmatrix}, \begin{bmatrix} 1 & 0 \\ 0 & 0 \\ 0 & 1 \\ 0 & 0 \end{bmatrix}, \begin{bmatrix} 0 & 0 \\ 1 & 0 \\ 0 & 0 \\ 0 & 1 \end{bmatrix} or \begin{bmatrix} 0 & 0 \\ 1 & 0 \\ 0 & 1 \\ 0 & 0 \end{bmatrix}$
  - N_{TX}=4, N_{STS}=3 $[Q_k]_{N_{STS}} = \begin{bmatrix} 1 & 0 & 0 \\ 0 & 1 & 0 \\ 0 & 0 & 0 \\ 0 & 0 & 1 \end{bmatrix} or \begin{bmatrix} 1 & 0 & 0 \\ 0 & 0 & 0 \\ 0 & 1 & 0 \\ 0 & 0 & 1 \end{bmatrix}$

- Beam Forming Steering Matrix – In this case Q_k is any matrix that improves the reception in the receiver based on some knowledge of the channel between the transmitter and the receiver. In explicit feedback BF

Exhibit 1015
Ericsson Inc. v. Woodbury Wireless LLC
Page 000052

the matrix Q_k is supplied by feedback from the station to which the beamformed packet is directed.

In the case where there are fewer space time streams than transmit chains, the first N_{STS} columns of the square matrices above can be used.

The same matrix Q_k shall be applied to subcarrier k during any part of the packet in GF mode and any part of the packet following and including the HT-STF field in a mixed mode packet. This operation is transparent to the receiver.

If the smoothing bit in the HT-SIG is not set to 0, the time domain channel between any space time stream and any transmit chain input, induced by the frequency dependence in the matrix Q_k, and the CSD added according to Table 6, shall not exceed 600ns.

When spatial expansion is applied to the transmission, allowing more transmit chains to be used than spatial streams, the additional CSD value for each TX chain shall not exceed 200 nsec.

If no spatial mapping is applied, the matrix Q_k is equal to the identity matrix and $N_{STS} = N_{TX}$.

4.7.2 20MHz HT transmission

The signal from the i_{TX} 'th transmit chain $i_{TX} = 1,\mathrm{K}\ , N_{TX}$ is:

$$r_{HT-DATA}^{i_{TX}}(t) = \frac{1}{\sqrt{N_{STS} \cdot N_{HT-DATA}^{Tones}}} \sum_{n=0}^{N_{SYM}-1} w_{T_{SYM}}(t - nT_{SYM})$$

$$\left(\sum_{k=0}^{N_{SD}-1} \sum_{i_{STS}=1}^{N_{STS}} \left[Q_{M(k)} \right]_{i_{TX}, i_{STS}} \tilde{d}_{k, i_{STS}, n} \exp\left(j2\pi M(k) \Delta_F \left(t - T_{GI} - nT_{SYM} - T_{CS}^{i_{STS}} \right) \right) + \right.$$

$$\left. p_{n+z} \sum_{k=-N_{SR}}^{N_{SR}} \sum_{i_{STS}=1}^{N_{STS}} \left[Q_k \right]_{i_{TX}, i_{STS}} P_{i_{STS}}^{(k,n)} \exp(j2\pi k \Delta_F \left(t - T_{GI} - nT_{SYM} - T_{CS}^{i_{STS}} \right) \right)$$

z is 3 in a mixed mode packet and 2 in a Green Field Packet. p_n is defined in section 17.3.5.9 of the 802.11a standard.

M(k) in the 20MHz case is

Exhibit 1015
Ericsson Inc. v. Woodbury Wireless LLC
Page 000053

$$M(k)=\begin{cases} k-28 & 0\le k\le 6 \\ k-27 & 7\le k\le 19 \\ k-26 & 20\le k\le 25 \\ k-25 & 26\le k\le 31 \\ k-24 & 32\le k\le 44 \\ k-23 & 45\le k\le 51 \end{cases}, \quad (24)$$

$P_{i_{Tx}}^{(k,n)}$ are defined in equation (22) above.

4.7.3 Transmission in 40MHz HT mode

In the case of 40MHz, the signal from the i_{TX} th transmit chain is:

$$\begin{aligned} r_{HT-DATA}^{i_{TX}}(t) = & \frac{1}{\sqrt{N_{STS}N_{HT-DATA}^{Tones}}} \sum_{n=0}^{N_{SYM}-1} w_{T_{SYM}}(t-nT_{SYM}) \cdot \\ & \Bigg(\sum_{k=0}^{N_{SD}/2-1} \sum_{i_{STS}=1}^{N_{STS}} \left[Q_{M(k)}\right]_{i_{TX},i_{STS}} \tilde{d}_{k,i_{STS},n} \exp\left(j2\pi M(k)\Delta_F\left(t-T_{GI}-nT_{SYM}-T_{CS}^{i_{STS}}\right)\right) + \\ & p_{n+z} \sum_{k=-N_{SR}}^{0} \sum_{i_{STS}=1}^{N_{STS}} \left[Q_k\right]_{i_{TX},i_{STS}} P_{i_{STS}}^{(k,n)} \exp\left(j2\pi k\Delta_F\left(t-T_{GI}-nT_{SYM}-T_{CS}^{i_{STS}}\right)\right) + \\ & j \sum_{k=N_{SD}/2}^{N_{SD}-1} \sum_{i_{STS}=1}^{N_{STS}} \left[Q_{M(k)}\right]_{i_{TX},i_{STS}} \tilde{d}_{k,i_{STS},n} \exp\left(j2\pi M(k)\Delta_F\left(t-T_{GI}-nT_{SYM}-T_{CS}^{i_{STS}}\right)\right) + \\ & jp_{n+z} \sum_{k=1}^{N_{SR}} \sum_{i_{STS}=1}^{N_{STS}} \left[Q_k\right]_{i_{TX},i_{STS}} P_{i_{STS}}^{(k,n)} \exp\left(j2\pi k\Delta_F\left(t-T_{GI}-nT_{SYM}-T_{CS}^{i_{STS}}\right)\right) \Bigg) \end{aligned}$$

Where *M(k)* is given below:

Exhibit 1015
Ericsson Inc. v. Woodbury Wireless LLC
Page 000054

$$M(k)=\begin{cases} k-58 & 0\le k\le 4 \\ k-57 & 5\le k\le 31 \\ k-56 & 32\le k\le 44 \\ k-55 & 45\le k\le 53 \\ k-52 & 54\le k\le 62 \\ k-51 & 63\le k\le 75 \\ k-50 & 76\le k\le 102 \\ k-49 & 103\le k\le 107 \end{cases}$$

- The pilot sequence $P_{i_{SMI}}^{(k,n)}$ is defined in equation (23) for 40MHz.

It should be noted that the 90º rotation that is applied to the upper part of the 40MHz channel is applied in the same way to the HT-STF, HT-LTF and HT-SIG. The rotation applies to both pilots and the data in upper part of the 40MHz channel.

4.7.4 Transmission in HT duplicate mode.

HT duplicate mode provides the lowest transmission rate in 40MHz. It may only be used for one spatial stream and only with BPSK coding and rate ½ coding.

Under HT duplicate mode, the following equation defines the signal:

$$\begin{aligned} r_{HT-DATA}^{i_{TX}}(t) = \frac{1}{\sqrt{N_{Duplicate}^{Tones}}} \sum_{n=0}^{N_{SYM}-1} w_{T_{SYM}}(t-nT_{SYM}) \\ \Bigg(\sum_{k=0}^{47} \left[Q_{M(k)-32}\right]_{i_{TX},1} d_{k,n} \exp\left(j2\pi\left(M(k)-32\right)\Delta_F\left(t-nT_{SYM}-T_{GI}\right)\right) + \\ j\sum_{k=0}^{47} \left[Q_{M(k)+32}\right]_{i_{TX},1} d_{k,n} \exp\left(j2\pi\left(M(k)+32\right)\Delta_F\left(t-nT_{SYM}-T_{GI}\right)\right) + \\ p_{n+z} \sum_{k=-N_{SR}}^{N_{SR}} \left[Q_{k-32}\right]_{i_{TX},1} P_k \exp\left(j2\pi(k-32)\Delta_F\left(t-nT_{SYM}-T_{GI}\right)\right) + \\ jp_{n+z} \sum_{k=-N_{SR}}^{N_{SR}} \left[Q_{k+32}\right]_{i_{TX},1} P_k \exp\left(j2\pi(k+32)\Delta_F\left(t-nT_{SYM}-T_{GI}\right)\right) \Bigg) \end{aligned}$$

z is defined in section 4.7.2. *M(k), P_k* is defined in section 17.3.5.9 of the 802.11a standard [1]. N_{SR} has the value defined for legacy 20MHz transmission. $\left[Q_k\right]_{i_{TX}}$ is an element from a vector of length N_{TX}, which may be frequency dependent. The rules of spatial expansion CSD limitation, as specified in section 4.7.1, shall apply to $\left[Q_k\right]_{i_{TX}}$

Exhibit 1015
Ericsson Inc. v. Woodbury Wireless LLC
Page 000055

4.7.5 Transmission with a short guard interval

Short guard interval is used in the data field of the packet, when the Short GI field in the HT-SIG is set to 1. When it is used, the same formula for the formation of the signal is used as in sections 14.7.2 and 4.7.3 with the exception of T_{GI} replaced by T_{GIS} and T_{SYM} is replaces with T_{SYMS}. Short GI shall not be used in GF mode when the MCS indicates a single spatial stream.

4.8 Legacy duplicate transmission

Legacy duplicate transmission is used to transmit to legacy 802.11a devices that may be present in either the upper and lower channels of the 40MHz channel. The L-STF, L-LTF and L-SIG are transmitted in the same way as in the HT 40MHz transmission. There is no HT-SIG, HT-STF or HT-LTF. Data transmission is defined in the following equation:

$$
\begin{aligned}
r_{LEG-DUP}^{i_{TX}}\left(t-nT_{SYM}\right) = & \frac{1}{\sqrt{N_{Duplicate}^{Tones}}} w_{TSYM}\left(t-nT_{SYM}\right) \\
& \Bigg(\sum_{k=0}^{47} \left[Q_{M(k)-32}\right]_{i_{TX},1} d_{k,n} \exp\left(j2\pi\left(M(k)-32\right)(\Delta_F\left(t-nT_{SYM}-T_{GI}-T_{CS}^{i_{TX}}\right)\right)+ \\
& j\sum_{k=0}^{47} \left[Q_{M(k)+32}\right]_{i_{TX},1} d_k \exp\left(j2\pi\left(M(k)+32\right)(\Delta_F\left(t-nT_{SYM}-T_{GI}-T_{CS}^{i_{TX}}\right)\right)+ \\
& p_n \sum_{k=-N_{SR}}^{N_{SR}} \left[Q_{k-32}\right]_{i_{TX},1} P_k \exp\left(j2\pi(k-32)\Delta_F\left(t-nT_{SYM}-T_{GI}-T_{CS}^{i_{TX}}\right)\right)+ \\
& jp_n \sum_{k=-N_{SR}}^{N_{SR}} \left[Q_{k+32}\right]_{i_{TX},1} P_k \exp\left(j2\pi(k+32)\Delta_F\left(t-nT_{SYM}-T_{GI}-T_{CS}^{i_{TX}}\right)\right)\Bigg)
\end{aligned}
$$

$P_k, M(k)$ are the ones defined at 11a standard at section 17.3.5.9.

$T_{CS}^{i_{TX}}$ are defined in Table 4. $\left[Q_k\right]_{i_{TX}}$ is an element from a vector of length N_{TX}, which may be frequency dependent. The rules of spatial expansion CSD limitation, as specified in section 4.7.1, shall apply to $\left[Q_k\right]_{i_{TX}}$

5 Channel Numbering and Channelization

The device operates both in the 5GHz band and 2.4GHz band. When using 20MHz channels it uses the same channels as in the 11a/11g. When using the 40MHz channel, it can operate in the channels defined in sections 5.1 and 5.2.

Exhibit 1015
Ericsson Inc. v. Woodbury Wireless LLC
Page 000056

5.1 Channel Allocation in the 5 GHz Band

Channel center frequencies are defined at every integral multiple of 5 MHz above 5 GHz (for 20 MHz channels). The relationship between center frequency and channel number is given by the following equation:

Channel center frequency = $5000 + 5 \cdot n_{ch}$ (MHz), Where $n_{ch} = 0,1,\ldots 200$.

The 40MHz channels in 5GHz are specified by two fields: ($N_{control\_ch}$, extension). The first field represents the channel number of the control channel, and the second one indicates whether the extension channel is above or below the control channel (1 -> above, -1 -> below). For example, a 40MHz channel consisting of channel 36 and 40 where channel 36 is the control channel shall be specified as (36,1).

The following table lists the valid settings of these two fields in the 5 GHz band.

Table 18 - 40MHz channel allocation in the 5GHz band

Regulatory domain	Band (GHZ)	$N_{control\_ch}$		Center Frequency (MHz)
		Extension=1	Extension=-1	
United States	U-NII lower band (5.15-5.25)	36 44	40 48	5190 5230
United States	U-NII middle band (5.25-5.35)	52 60	56 64	5270 5310
Europe	ETSI (5.5-5.7)	100 108 116 124 132	104 112 120 128 136	5510 5550 5590 5630 5670
United States	U-NII upper band (5.725-5.825)	149 157	153 161	5755 5795

5.2 Channel Allocation in the 2.4 GHz Band

Channel center frequencies are defined at every integral multiple of 5 MHz in the 2.4 GHz band. The relationship between center frequency and channel number

Exhibit 1015
Ericsson Inc. v. Woodbury Wireless LLC
Page 000057

is given by the following equation: Channel center frequency = 2407 + 5 · n_{ch} (MHz), Where n_{ch} = 1,2,…11.

The 40MHz channels in 2.4GHz are specified in the same way as in 5GHz: ($N_{control\_ch}$, extension). The first field represents the channel number of the control channel, and the second one indicates whether the extension channel is above or below the control channel (1 -> above, -1 -> below). For example, a 40MHz channel consisting of channel 2 and channel 6 where channel 6 is the control channel shall be specified as (6, -1).

The following table lists the valid settings of these two fields in the 2.4 GHz band.

Table 19 - 40Mhz channel alocation in the 2.4GHz and

Regulatory domain	$N_{control\_ch}$		Center Frequency (MHz)
	Extension=1	Extension=-1	
United States Canada Europe	1	5	2422
	2	6	2427
	3	7	2432
	4	8	2437
	5	9	2442
	6	10	2447
	7	11	2452

6 Transmit Spectrum Mask

When transmitting in a 20MHz channel, the transmitted spectrum shall have a 0 dBr (dB relative to the maximum spectral density of the signal) bandwidth not exceeding 18 MHz, –20 dBr at 11 MHz frequency offset, –28 dBr at 20 MHz frequency offset and –45 dBr at 30 MHz frequency offset and above. The transmitted spectral density of the transmitted signal shall fall within the spectral mask, as shown in Figure 14. The measurements shall be made using a 100 kHz resolution bandwidth and a 30 kHz video bandwidth.

Exhibit 1015
Ericsson Inc. v. Woodbury Wireless LLC
Page 000058

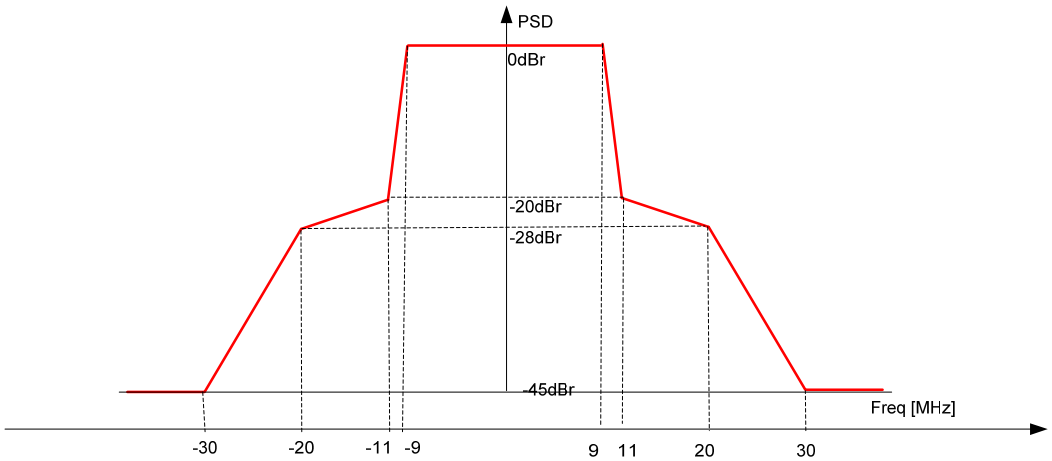

Figure 14 - Transmit spectral mask for 20MHz Transmission

When transmitting in a 40MHz channel, the transmitted spectrum shall have a 0 dBr bandwidth not exceeding 38 MHz, –20 dBr at 21 MHz frequency offset, -28 dBr at 40 MHz offset and –45 dBr at 60 MHz frequency offset and above. The transmitted spectral density of the transmitted signal shall fall within the spectral mask, as shown in Figure 15.

The transmit spectral mask for 20MHz transmission in upper or lower 20Mhz channels of a 40MHz is the same mask as that used for the 40MHz channel.

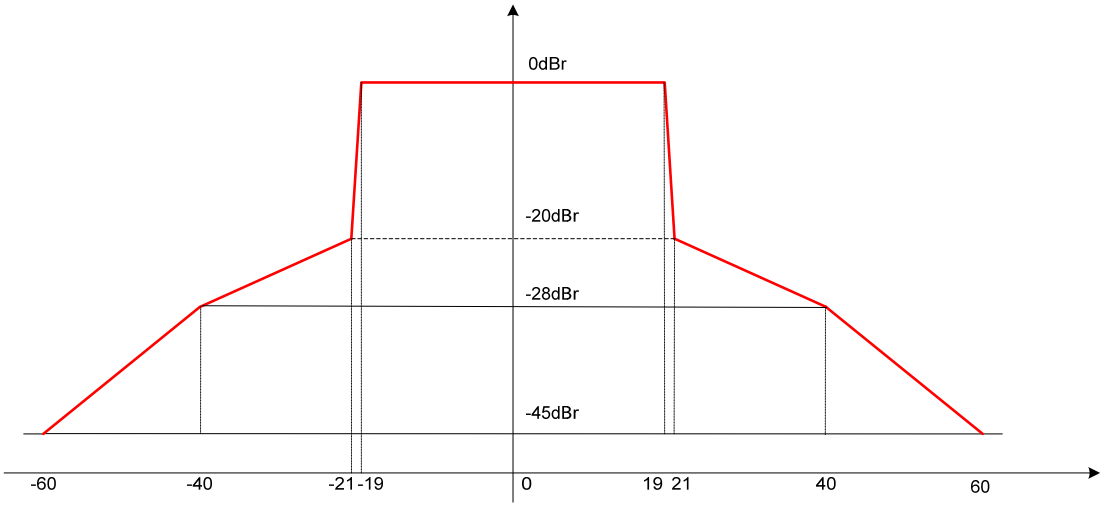

Figure 15 - Transmit spectral mask for a 40MHz channel

6.1 Spectral Flatness

In a 20MHz channel and in corresponding 20MHz transmission in a 40MHz channel, the average energy of the constellations in each of the spectral lines –16 to –1 and +1 to +16 shall deviate no more than ± 2 dB from their average

Exhibit 1015
Ericsson Inc. v. Woodbury Wireless LLC
Page 000059

energy. The average energy of the constellations in each of the spectral lines –28 to –17 and +17 to +28 will deviate no more than +2/–4 dB from the average energy of spectral lines –16 to –1 and +1 to +16.
In a 40 MHz transmission the average energy of the constellations in each of the spectral lines –42 to –2 and +2 to +42 shall deviate no more than ± 2 dB from their average energy. The average energy of the constellations in each of the spectral lines –43 to –58 and +43 to +58 shall deviate no more than +2/–4 dB from the average energy of spectral lines –42 to –2 and +2 to +42.
The data for this test will be based on the channel estimate step.

6.2 Transmit Power

The maximum allowable output power of the device is the same as in legacy 802.11a or 802.11g transmitter. If more than one transmit chain is used, the total power in all transmit chains shall be equal to the total power possible for a legacy 802.11a/g transmitter. If a 40MHz channel is used, the total transmitted power in the 40MHz bandwidth shall be equal to the total transmitted power allowed for a legacy 802.11a transmitter in a 20MHz channel.

6.3 Transmit center frequency tolerance

The transmitter center frequency tolerance shall be ±20 ppm maximum. The different transmit chain center frequencies (LO) and each transmit chain symbol clock frequency shall all be derived from the same reference oscillator.

7 Packet alignment

7.1 Packet alignment

The receiver will assert PHY-CCA.indicate(idle).(12.3.5.10) at the 4μsec boundary following the reception of the last symbol of the packet.

The transmitter will assert PHY-TXEND.confirm (12.3.5.7) at the trailing boundary of the last symbol of the packet on the air.

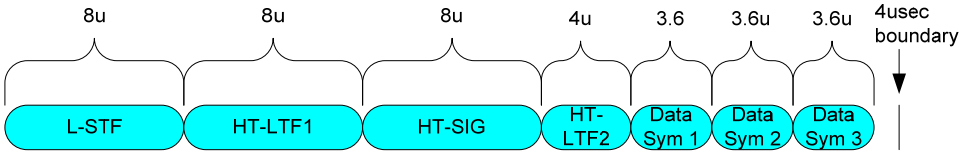

Figure 16 - Packet alignment example - GF packet with short GI

Exhibit 1015
Ericsson Inc. v. Woodbury Wireless LLC
Page 000060

7.2 Reduced Interframe Space (RIFS)

The transmitter shall be able to transmit a packet 2usec after PHY-TXEND.confirm is asserted. The receiver shall be able to decode a packet if it starts 2μsec after PHY-RXEND.indication is asserted for the previous packet. RIFS timing accuracy is ±10%.

8 Beamforming

Beamforming is a technique in which the transmitter utilizes the knowledge of the MIMO channel to generate a spatial mapping matrix Q_k that will improve reception in the receiver.

The MIMO channel model is one in which when a vector $\mathbf{x}_k = \left[x_1, x_2, \mathrm{K}\ , x_{N_{TX}} \right]^T$ is transmitted in subcarrier k the received vector $\mathbf{y}_k = \left[y_1, y_2, \mathrm{K}\ , y_{N_{RX}} \right]^T$ is modeled as:

$$\mathbf{y}_k = H_k \mathbf{x}_k + \mathbf{n}$$

Where H_k is the channel matrix $\left(N_{RX}, N_{TX} \right)$ and $\mathbf{n}$ is white (spatial and temporally) Gaussian noise.

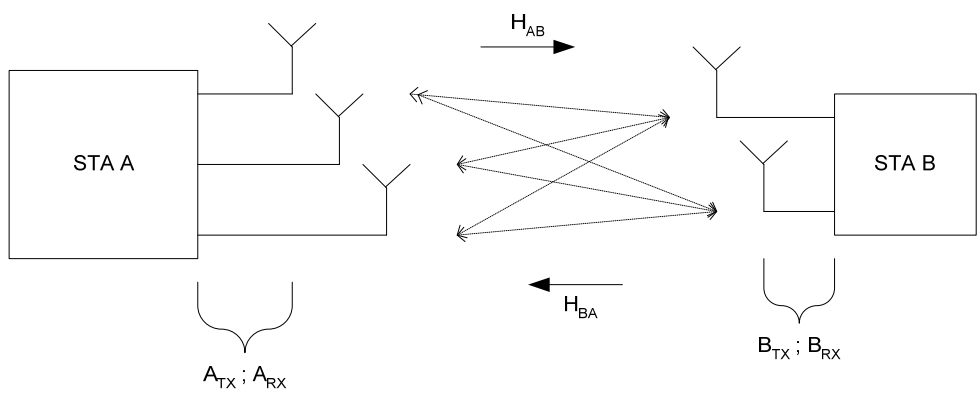

Figure 17 - The beamforming MIMO channel model

When beamforming is used, the transmitter replaces $\mathbf{x}_k$ with $Q_k \mathbf{x}_k$ so that the received vector is $\mathbf{y}_k = H_k Q_k \mathbf{x}_k + \mathbf{n}$

There are several methods of beam forming, differing in the way the transmitter acquires the knowledge of the channel matrices H_k and on whether the transmitter or the receiver generates Q_k.

In implicit beam forming the transmitter uses the fact that the channel between antenna i at STA A and antenna l at STA B, is the same as the channel

Exhibit 1015
Ericsson Inc. v. Woodbury Wireless LLC
Page 000061

measured at antenna i of STA A when antenna l at STA B is transmitting. Using a matrix representation of the channel, it means that the channel between STA A and STA B is the transpose of the channel between STA B and STA A. This is true for the channels between the antennas. Since the actual channel includes the transmit chain in STA A and receive chain in STA B, there is the need for a calibration procedure to correct for the difference in the measured channel, due to the difference between the combinations of STA A transmitter and STA B receiver ($B_{RX}H_{AB}A_{TX}$) vs. STA B transmitter and STA A receiver ($A_{RX}H_{BA}B_{TX}$). (A_{TX} is the diagonal matrix modeling the attenuation and delay in each of STA A transmit chains, similarly B_{TX} and A_{RX}, B_{RX} with receiver chains).

In explicit beamforming, in order for STA A to transmit a beamformed packet to STA B, STA B measures the channel matrices and sends STA A either the mapping matrices Q_k to uses, or the channel matrices H_k.

8.1 CSI Matrices Feedback

In the CSI matrices feedback the transmitting STA receives an action frame containing the quantized MIMO channel matrix, H, from the receiving STA. The transmitting station then may use this matrix to compute a set of transmit spatial mapping matrices, Q_k.

The matrix H (of a specific subcarrier) shall be encoded as follows:

- The maximum of the real part of and the maximum of the imaginary part of each element of the matrix is found and the maximum of these is taken:
  $$m_H = \max\left\{\max\left\{\left|\Re H_{k,l}\right|\right\}_{k,l=1}^{k=N_{TX},l=N_{RX}}, \max\left\{\left|\Im H_{k,l}\right|\right\}_{k,l=1}^{k=N_{TX},l=N_{RX}}\right\}$$
- Each element in the matrix $H_{k,l}$ is quantized to Nb bits in two's complement notation according to the formula: $H_{k,l}^{Q} = round\left(\frac{H_{k,l}}{m_H}\left(2^{N_b}-1\right)\right)$.
- The ratio between $\max\left\{m_H(k)\right\}_{k=-N_{SR}}^{N_{SR}}$ and $m_H(k)$ of subcarrier k in decibel units is encoded in 3 bits using one's complement notation.

Therefore each matrix is encoded using $3+2\times Nb\times N_{TX}\times N_{RX}$ bits.

Nb may have the value of 4, 5, 6, 8 bits.

Exhibit 1015
Ericsson Inc. v. Woodbury Wireless LLC
Page 000062

8.2 Non Compressed Steering Matrix Feedback

In non compressed steering matrix feedback, the receiving station computes a set of matrices for feedback to the transmitter. These matrices are assembled into an action frame as described in MAC section "Steering Matrices Feedback Frame". The transmitter can then apply these matrices directly as the spatial mapping matrices Q_k .

The encoding of these matrices is identical to the encoding of the CSI matrices. The dimensions of the steering matrices is $N_{TX} \times N_{SS}$.

8.3 Compressed Steering Matrix Feedback

In compressed steering matrix feedback, the receiving station computes a set of compressed unitary matrices for feedback to the transmitter. These compressed matrices are assembled into an action frame as described in MAC section "Compressed Steering Matrices Feedback Frame ".

The transmitter can then apply these matrices, or a function of them, as the spatial mapping matrices Q_k . The matrix compression is defined as follows. The unitary matrix V shall be represented as:

$$V = \prod_{i=1}^{\min(N-1,M)} \left[D_i \left(1_{i-1} \quad e^{j\phi_{i,i}} \quad \ldots \quad e^{j\phi_{N-1,i}} \quad 1 \right) \prod_{l=i+1}^{N} G_{li}^{T}\left(\psi_{li}\right) \right] \times I_{N\times M}$$

The matrix $D_i\left(x_1 \quad \mathrm{L} \quad x_n\right)$ is an n by n diagonal matrix with elements x_1 to x_n on the diagonal. Note that there will be the first i elements, x_1 to x_i of D_i will be 1. The matrix $G_{li}(\psi)$ is an n by n Givens rotation matrix:

$$G_{li}(\psi) = \begin{bmatrix} I_{i-1} & 0 & 0 & 0 & 0 \\ 0 & \cos(\psi) & 0 & \sin(\psi) & 0 \\ 0 & 0 & I_{l-i-1} & 0 & 0 \\ 0 & -\sin(\psi) & 0 & \cos(\psi) & 0 \\ 0 & 0 & 0 & 0 & I_{N-l} \end{bmatrix}$$

where each I_m is an m by m identity matrix, and $\cos(\Psi)$ and $\sin(\Psi)$ are located at lth and ith row and column. I_{NxM} is an identity matrix padded with zeros to fill the additional rows or columns when $N \neq M$.

For example, a 4x2 V matrix has the following representation:

Exhibit 1015
Ericsson Inc. v. Woodbury Wireless LLC
Page 000063

$$V=\begin{bmatrix}1&0&0&0\\0&e^{j\phi_{21}}&0&0\\0&0&e^{j\phi_{31}}&0\\0&0&0&e^{j\phi_{41}}\end{bmatrix}\times G_{21}^{T}(\psi_{21})G_{31}^{T}(\psi_{31})G_{41}^{T}(\psi_{41})\times\begin{bmatrix}1&0&0&0\\0&1&0&0\\0&0&e^{j\phi_{32}}&0\\0&0&0&e^{j\phi_{42}}\end{bmatrix}\times$$

$$\times G_{32}^{T}(\psi_{32})G_{42}^{T}(\psi_{42})\times\begin{bmatrix}1&0\\0&1\\0&0\\0&0\end{bmatrix}$$

$$V=\begin{bmatrix}1&0&0&0\\0&e^{j\phi_{21}}&0&0\\0&0&e^{j\phi_{31}}&0\\0&0&0&e^{j\phi_{41}}\end{bmatrix}\times\begin{bmatrix}\cos\psi_{21}&\sin\psi_{21}&0&0\\-\sin\psi_{21}&\cos\psi_{21}&0&0\\0&0&1&0\\0&0&0&1\end{bmatrix}^{T}\begin{bmatrix}\cos\psi_{31}&0&\sin\psi_{31}&0\\0&1&0&0\\-\sin\psi_{31}&0&\cos\psi_{31}&0\\0&0&0&1\end{bmatrix}^{T}\begin{bmatrix}\cos\psi_{41}&0&0&\sin\psi_{41}\\0&1&0&0\\0&0&1&0\\-\sin\psi_{41}&0&0&\cos\psi_{41}\end{bmatrix}^{T}$$

$$\times\begin{bmatrix}1&0&0&0\\0&1&0&0\\0&0&e^{j\phi_{32}}&0\\0&0&0&e^{j\phi_{42}}\end{bmatrix}\times\begin{bmatrix}1&0&0&0\\0&\cos\psi_{32}&\sin\psi_{32}&0\\0&-\sin\psi_{32}&\cos\psi_{32}&0\\0&0&0&1\end{bmatrix}^{T}\begin{bmatrix}1&0&0&0\\0&\cos\psi_{42}&0&\sin\psi_{42}\\0&0&1&0\\0&-\sin\psi_{42}&0&\cos\psi_{42}\end{bmatrix}^{T}\times\begin{bmatrix}1&0\\0&1\\0&0\\0&0\end{bmatrix}$$

This is a description of a method for finding a compressed V matrix using Givens Rotation.

$$V=\left[\prod_{i=1}^{\min(M,N-1)}\left[D_i\left(1_{i-1}\quad e^{j\phi_{i,i}}\quad\ldots\quad e^{j\phi_{N-1,i}}\quad 1\right)\prod_{l=i+1}^{N}G_{li}^{T}(\psi_{li})\right]\right]\tilde{I}_{N\times M}$$

A unitary NxM beamforming matrix V is column-wise phase invariant because the steering matrix needs a reference in phase per each column. This means V may be equivalent to $\tilde{V}\tilde{D}$, where $\tilde{D}$ is a column-wise phase shift matrix such as $\tilde{D}=diag(e^{j\theta_1},.e^{j\theta_2},..,e^{j\theta_M})$. When the beamformee estimates the channel, it may find $\tilde{V}$ for the beamforming matrix for the beamformer, but it may send $\tilde{V}\tilde{D}$ back to the beamformer, where $V=\tilde{V}\tilde{D}$. θ_i in $\tilde{D}$ is found to make the last row of $\tilde{V}\tilde{D}$ to be real numbers.

When the beamformee finds V matrix, all of elements in V may be complex numbers. The angles $\phi_{1,1}$, …, $\phi_{N-1,1}$ in the diagonal matrix $D_1\left(e^{j\phi_{11}}\quad\ldots\quad e^{j\phi_{N-1,1}}\quad 1\right)^{*}$ may

Exhibit 1015
Ericsson Inc. v. Woodbury Wireless LLC
Page 000064

be found to make the first column of $V\widetilde{D}$ to all be real numbers. Now, the first column of $\left(G_{41}G_{31}G_{21}D_1^{\ *}\right)\times V$ can be $[1\ 0\ \ldots\ 0]^T$ by Givens rotation G_{l1}'s such as

$$\begin{bmatrix} \cos\psi_{N1} & 0 & 0 & \sin\psi_{N1} \\ 0 & 1 & 0 & 0 \\ 0 & 0 & 1 & 0 \\ -\sin\psi_{N1} & 0 & 0 & \cos\psi_{N1} \end{bmatrix} \begin{bmatrix} \cos\psi_{31} & 0 & \sin\psi_{31} & 0 \\ 0 & 1 & 0 & 0 \\ -\sin\psi_{31} & 0 & \cos\psi_{31} & 0 \\ 0 & 0 & 0 & 1 \end{bmatrix} \begin{bmatrix} \cos\psi_{21} & \sin\psi_{21} & 0 & 0 \\ -\sin\psi_{21} & \cos\psi_{21} & 0 & 0 \\ 0 & 0 & 1 & 0 \\ 0 & 0 & 0 & 1 \end{bmatrix} \begin{bmatrix} e^{j\phi_{11}} & 0 & 0 & 0 \\ 0 & O & 0 & 0 \\ 0 & 0 & e^{j\phi_{N-1,1}} & 0 \\ 0 & 0 & 0 & 1 \end{bmatrix}^* \times V = \begin{bmatrix} 1 & 0 & 0 & 0 \\ 0 & & & \\ 0 & & V_2 & \\ 0 & & & \end{bmatrix}$$

For new (N-1) x (M-1) submatrix V_2, this process may be applied in the same way. Then, the angles $\phi_{2,2}, \ldots, \phi_{N-1,2}$ in the diagonal matrix $D_2\begin{pmatrix}1 & e^{j\phi_{22}} & e^{j\phi_{32}} & 1\end{pmatrix}^*$ may be found to make the first column of V_2 to be all real numbers. Now, the first two columns of $\left(G_{42}G_{32}D_2^*\right)\left(G_{41}G_{31}G_{21}D_1^{\ *}\right)\times V$ can be $\widetilde{I}_{Nx2}$ by Givens rotation G_{l2}'s such as

$$\begin{bmatrix} 1 & 0 & 0 & 0 \\ 0 & \cos\psi_{N2} & 0 & \sin\psi_{21} \\ 0 & 0 & 1 & 0 \\ 0 & -\sin\psi_{N2} & 0 & \cos\psi_{N2} \end{bmatrix} \begin{bmatrix} 1 & 0 & 0 & 0 \\ 0 & \cos\psi_{32} & \sin\psi_{32} & 0 \\ 0 & -\sin\psi_{32} & \cos\psi_{32} & 0 \\ 0 & 0 & 0 & 1 \end{bmatrix} \begin{bmatrix} 1 & 0 & 0 & 0 \\ 0 & e^{j\phi_{22}} & 0 & 0 \\ 0 & 0 & e^{j\phi_{N-1,2}} & 0 \\ 0 & 0 & 0 & 1 \end{bmatrix}^* \times G_{41}G_{31}G_{21}D_1^{**}V = \begin{bmatrix} 1 & 0 & 0 & 0 \\ 0 & 1 & 0 & 0 \\ 0 & 0 & & \\ 0 & 0 & V_3 & \end{bmatrix}$$

This process may keep going until the first M columns of right side matrix becomes $\widetilde{I}_{NxM}$. When $M < N$, this process does not have to go on because V_{M+1} will be nulled out by $\widetilde{I}_{NxM}$. Then, by multiplying the conjugate transpose of product of series of D_i's and G_{li}'s on the left, V can be expressed as

$$V = \left[\prod_{i=1}^{\min(M,N-1)} \left[D_i\left(1_{i-1} \quad e^{j\phi_{i,i}} \quad \ldots \quad e^{j\phi_{N-1,i}} \quad 1\right)\prod_{l=i+1}^{N} G_{li}^T\left(\psi_{li}\right)\right]\right]\widetilde{I}_{N\times M},$$

9 High Throughput Preamble Format for Sounding PPDUs

MIMO channel measurement takes place in every PPDU as a result of transmitting the HT-LTFs as part of the PLCP preamble. At a minimum, the number of HT-LTFs transmitted must be equal to the number of space time streams transmitted, and these are transmitted using the same spatial

Exhibit 1015
Ericsson Inc. v. Woodbury Wireless LLC
Page 000065

transformation that is used for the HT-Data. This enables the computation of the spatial equalization at the receiver.

When the number of space time streams, N_{STS}, is less than the number of transmit antennas, or less than $\min(N_{TX}, N_{RX})$, sending only N_{STS} HT-LTFs does not allow the receiver to recover a full characterization of the MIMO channel, even though the resulting MIMO channel measurement is sufficient for receiving the HT-Data.

However, there are several cases where it is desirable to obtain as full a characterization of the channel as is possible, thus requiring the transmission of a sufficient number of HT-LTFs to sound the full dimensionality of the channel, which is in some cases N_{TX}, and in other cases $\min(N_{TX}, N_{RX})$. We refer to these cases of MIMO channel measurement as MIMO channel sounding. A sounding packet may be used to probe available channel dimensions. A sounding PPDU is identified by setting the sounding bit in HT-SIG to zero. A sounding PPDU may have any allowed number of HT-LTFs satisfying $N_{LTF} \geq N_{STS}$ (A sounding packet may have $N_{STS} = N_{LTF}$). In general, if the sounding bit in the HT-SIG is set to zero, when $N_{LTF} > N_{STS}$, segmented HT-LTFs are used, except for the case where $N_{SS} = 3$ and $N_{LTF} = 4$ or in a zero length packet.

Even if N_{ESS} =0 in a sounding packet, the sounding bit shall be set to zero.

9.1 Sounding with a zero length packet

An STA may sound the channel using a zero length packet (indicated by zero in the Length field in the HT-SIG) with the sounding bit set. The number of LTF's is the number implied by the MCS. No data field will follow the last HT-LTF or the HT-SIG (see Figure 18).

It is optional for an STA to process a zero length packet.

Figure 18 -An example of a zero length packet used for sounding

9.2 Sounding PPDU for calibration

In the case of a bidirectional calibration exchange, two STAs exchange sounding PPDUs enabling the receiving STA to compute an estimate of the MIMO channel

Exhibit 1015
Ericsson Inc. v. Woodbury Wireless LLC
Page 000066

matrix, H_k, for each subcarrier. In general, in an exchange of calibration messages, the number of spatial streams will be less than the number of transmit antennas, necessitating the use of segmented HT-LTFs. In the case of sounding PPDUs for calibration, the antenna mapping matrix shall be

$$Q_k = \mathbf{C}_{CSD}(k) P_{HTLTF},$$

where $\mathbf{C}_{CSD}(k)$ is a diagonal cyclic shift matrix, where the diagonal elements carry frequency-domain representation of the cyclic shifts given in Table 4, and $\mathbf{P}_{HTLTF}$ is the unitary matrix given in 3.6.5.

9.3 Sounding PPDU for channel quality assessment (informative)

A MIMO channel with N_{TX} transmit antennas and N_{RX} receive antennas can support a maximum of $N_{STS,\max} = \min\left(N_{TX}, N_{RX}\right)$ space time streams. In order for a receiving STA to obtain a channel quality assessment for all $N_{STS,\max}$ available spatial streams, so that it can respond to an MRQ, when using a transmit steering matrix Q_k, it needs an estimate of the effective channel $H_k Q_k$, where Q_k is in this case a $N_{TX} \times N_{STS,\max}$ orthonormal steering matrix. This requires the transmitting STA to send HT-LTFs to sound the $N_{STS,\max}$ available space time streams. The number of HT-LTFs can be determined from HT-SIG fields of MCS and STBC as shown in Table 10. STAs supporting the transmission of segmented HT-LTFs can send a sounding PPDU using extension HT-LTFs as necessary. STAs that don't support transmission of segemented PPDUs may only send a sounding PPDU when $N_{SS} = N_{STS,\max}$.

10 Optional Features

This section assembles the main features that are optional

- Green Field mode is optional at both receive and transmit
- Short GI is optional at both receive and transmit
- STBC is optional at both receive and transmit
- Beam Forming is optional at both receive and transmit
- 40MHz Channel processing is optional at both transmit and receive.

Exhibit 1015
Ericsson Inc. v. Woodbury Wireless LLC
Page 000067

11 References

[1] IEEE Std 802.11a-1999 – Part 11 Wireless Land Medium Access control (MAC) and Physical Layer (PHY) specification: High Speed Physical Layer in the 5 GHZ Band.

[2] IEEE Std 802.11b-1999 – Part 11 Wireless Land Medium Access control (MAC) and Physical Layer (PHY) specification: Higher-Speed Physical Layer Extension in the 2.4 GHz Band.

[3] IEEE Std 802.11g-1999 – Part 11 Wireless Land Medium Access control (MAC) and Physical Layer (PHY) specification: Amendment 4: Further Higher Data Rate Extension in the 2.4 GHz Band

Exhibit 1015
Ericsson Inc. v. Woodbury Wireless LLC
Page 000068

Appendix A: Rate Dependent Parameters for High Throughput Modulation and Coding Schemes (MCS)

Table A-1 – rate dependent parameters for mandatory 20 MHz, N_{SS} =1 modes

MCS Index	Modulation	R	N_{BPSC}	N_{SD}	N_{SP}	N_{CBPS}	N_{DBPS}	Data rate (Mbps)	
								800ns GI	400ns GI[1]
0	BPSK	½	1	52	4	52	26	6.5	7.2
1	QPSK	½	2	52	4	104	52	13.0	14.4
2	QPSK	¾	2	52	4	104	78	19.5	21.7
3	16-QAM	½	4	52	4	208	104	26.0	28.9
4	16-QAM	¾	4	52	4	208	156	39.0	43.3
5	64-QAM	2/3	6	52	4	312	208	52.0	57.8
6	64-QAM	¾	6	52	4	312	234	58.5	65.0
7	64-QAM	5/6	6	52	4	312	260	65.0	72.2

[1]Support of 400 ns guard interval is optional on transmit and receive.

Exhibit 1015
Ericsson Inc. v. Woodbury Wireless LLC
Page 000069

Table A-2—Rate-dependent parameters for optional 20 MHz, N_{SS} = 2 modes

MCS Index	Modulation	R	N_{BPSC}	N_{SD}	N_{SP}	N_{CBPS}	N_{DBPS}	Data rate (Mbps)	
								800ns GI	400ns GI
8	BPSK	½	1	52	4	104	52	13.0	14.444
9	QPSK	½	2	52	4	208	104	26.0	28.889
10	QPSK	¾	2	52	4	208	156	39.0	43.333
11	16-QAM	½	4	52	4	416	208	52.0	57.778
12	16-QAM	3/4	4	52	4	416	312	78.0	86.667
13	64-QAM	2/3	6	52	4	624	416	104.0	115.556
14	64-QAM	¾	6	52	4	624	468	117.0	130.000
15	64-QAM	5/6	6	52	4	624	520	130.0	144.444

[1]Support of 400 ns guard interval is optional on transmit and receive.

Table A-3—Rate-dependent parameters for optional 20 MHz, N_{SS} = 3 modes

MCS Index	Modulation	R	N_{BPSC}	N_{SD}	N_{SP}	N_{CBPS}	N_{DBPS}	Data rate (Mbps)	
								800 ns GI	400ns GI
16	BPSK	½	1	52	4	156	78	19.5	21.7
17	QPSK	½	2	52	4	312	156	39.0	43.3
18	QPSK	¾	2	52	4	312	234	58.5	65.0
19	16-QAM	½	4	52	4	624	312	78.0	86.7
20	16-QAM	3/4	4	52	4	624	468	117.0	130.0
21	64-QAM	2/3	6	52	4	936	624	156.0	173.3
22	64-QAM	¾	6	52	4	936	702	175.5	195.0
23	64-QAM	5/6	6	52	4	936	780	195.0	216.7

Exhibit 1015
Ericsson Inc. v. Woodbury Wireless LLC
Page 000070

Table A-4—Rate-dependent parameters for optional 20 MHz, N_{SS} = 4 modes

MCS Index	Modulation	R	N_{BPSC}	N_{SD}	N_{SP}	N_{CBPS}	N_{DBPS}	Data rate (Mbps)	
								800 ns GI	400ns GI[1]
24	BPSK	½	1	52	4	208	104	26.0	28.9
25	QPSK	½	2	52	4	416	208	52.0	57.8
26	QPSK	¾	2	52	4	416	312	78.0	86.7
27	16-QAM	½	4	52	4	832	416	104.0	115.6
28	16-QAM	3/4	4	52	4	832	624	156.0	173.3
29	64-QAM	2/3	6	52	4	1248	832	208.0	231.1
30	64-QAM	¾	6	52	4	1248	936	234.0	260.0
31	64-QAM	5/6	6	52	4	1248	1040	260.0	288.9

Table A-5—Rate-dependent parameters for optional 40 MHz, N_{SS} = 1 modes

MCS Index	Modulation	R	N_{BPSC}	N_{SD}	N_{SP}	N_{CBPS}	N_{DBPS}	Data rate (Mbps)	
								800 ns GI	400ns GI
0	BPSK	½	1	108	6	108	54	13.5	15.0
1	QPSK	½	2	108	6	216	108	27.0	30.0
2	QPSK	¾	2	108	6	216	162	40.5	45.0
3	16-QAM	½	4	108	6	432	216	54.0	60.0
4	16-QAM	3/4	4	108	6	432	324	81.0	90.0
5	64-QAM	2/3	6	108	6	648	432	108.0	120.0
6	64-QAM	¾	6	108	6	648	486	121.5	135.0
7	64-QAM	5/6	6	108	6	648	540	135.0	150.0

Exhibit 1015
Ericsson Inc. v. Woodbury Wireless LLC
Page 000071

Table A-6—Rate-dependent parameters for optional 40 MHz, N_{SS} = 2 modes

MCS Index	Modulation	R	N_{BPSC}	N_{SD}	N_{SP}	N_{CBPS}	N_{DBPS}	Data rate (Mbps)	
								800 ns GI	400ns GI
8	BPSK	½	1	108	6	216	108	27.0	30.0
9	QPSK	½	2	108	6	432	216	54.0	60.0
10	QPSK	¾	2	108	6	432	324	81.0	90.0
11	16-QAM	½	4	108	6	864	432	108.0	120.0
12	16-QAM	3/4	4	108	6	864	648	162.0	180.0
13	64-QAM	2/3	6	108	6	1296	864	216.0	240.0
14	64-QAM	¾	6	108	6	1296	972	243.0	270.0
15	64-QAM	5/6	6	108	6	1296	1080	270.0	300.0

Table A-7—Rate-dependent parameters for optional 40 MHz, N_{SS} = 3 modes

MCS Index	Modulation	R	N_{BPSC}	N_{SD}	N_{SP}	N_{CBPS}	N_{DBPS}	Data rate (Mbps)	
								800 ns GI	400ns GI
16	BPSK	½	1	108	6	324	162	40.5	45.0
17	QPSK	½	2	108	6	648	324	81.0	90.0
18	QPSK	¾	2	108	6	648	486	121.5	135.0
19	16-QAM	½	4	108	6	1296	648	162.0	180.0
20	16-QAM	3/4	4	108	6	1296	972	243.0	270.0
21	64-QAM	2/3	6	108	6	1944	1296	324.0	360.0
22	64-QAM	¾	6	108	6	1944	1458	364.5	405.0
23	64-QAM	5/6	6	108	6	1944	1620	405.0	450.0

Exhibit 1015
Ericsson Inc. v. Woodbury Wireless LLC
Page 000072

Table A-8—Rate-dependent parameters for optional 40 MHz, N_{SS} = 4 modes

MCS Index	Modulation	R	N_{BPSC}	N_{SD}	N_{SP}	N_{CBPS}	N_{DBPS}	Data rate (Mbps)	
								800 ns GI	400ns GI
24	BPSK	½	1	108	6	432	216	54.0	60.0
25	QPSK	½	2	108	6	864	432	108.0	120.0
26	QPSK	¾	2	108	6	864	648	162.0	180.0
27	16-QAM	½	4	108	6	1728	864	216.0	240.0
28	16-QAM	3/4	4	108	6	1728	1296	324.0	360.0
29	64-QAM	2/3	6	108	6	2592	1728	432.0	480.0
30	64-QAM	¾	6	108	6	2592	1944	486.0	540.0
31	64-QAM	5/6	6	108	6	2592	2160	540.0	600.0

Table A-9—Rate-dependent parameters for optional 40 MHz HT duplicate mode, N_{SS} = 1

MCS Index	Modulation	R	N_{BPSC}	N_{SD}	N_{SP}	N_{CBPS}	N_{DBPS}	Data rate (Mbps)	
								800 ns GI	400ns GI
32	BPSK	½	1	96	8	48	24	6.0	6.7

Table A-10—Rate-dependent parameters for optional 20 MHz, N_{SS} = 2 modes

MCS Index	Modulation		R	N_{TBPS}	N_{SD}	N_{SP}	N_{CBPS}	N_{DBPS}	Data rate (Mbps)	
	Stream 1	Stream 2							800 ns GI	400ns GI
33	16-QAM	QPSK	½	6	52	4	312	156	39	43.3
34	64-QAM	QPSK	½	8	52	4	416	208	52	57.8
35	64-QAM	16-QAM	½	10	52	4	520	260	65	72.2
36	16-QAM	QPSK	3/4	6	52	4	312	234	58.5	65.0
37	64-QAM	QPSK	¾	8	52	4	416	312	78	86.7
38	64-QAM	16-QAM	3/4	10	52	4	520	390	97.5	108.3

Exhibit 1015
Ericsson Inc. v. Woodbury Wireless LLC
Page 000073

Table A-11 – rate dependent parameters for optional 20MHz, N_{SS} = 3 modes

MCS Index	Modulation			R	N_{TBPS}	N_{SD}	N_{SP}	N_{CBPS}	N_{DBPS}	Data rate (Mbps)	
	Stream 1	Stream 2	Stream 3							800 ns GI	400ns GI
39	16-QAM	QPSK	QPSK	½	8	52	4	416	208	52	57.8
40	16-QAM	16-QAM	QPSK	½	10	52	4	520	260	65	72.2
41	64-QAM	QPSK	QPSK	½	10	52	4	520	260	65	72.2
42	64-QAM	16-QAM	QPSK	½	12	52	4	624	312	78	86.7
43	64-QAM	16-QAM	16-QAM	½	14	52	4	728	364	91	101.1
44	64-QAM	64-QAM	QPSK	½	14	52	4	728	364	91	101.1
45	64-QAM	64-QAM	16-QAM	½	16	52	4	832	416	104	115.6
46	16-QAM	QPSK	QPSK	¾	8	52	4	416	312	78	86.7
47	16-QAM	16-QAM	QPSK	¾	10	52	4	520	390	97.5	108.3
48	64-QAM	QPSK	QPSK	¾	10	52	4	520	390	97.5	108.3
49	64-QAM	16-QAM	QPSK	¾	12	52	4	624	468	117	130.0
50	64-QAM	16-QAM	16-QAM	¾	14	52	4	728	546	136.5	151.7
51	64-QAM	64-QAM	QPSK	¾	14	52	4	728	546	136.5	151.7
52	64-QAM	64-QAM	16-QAM	¾	16	52	4	832	624	156	173.3

Table A-12—Rate-dependent parameters for optional 20 MHz, N_{SS} = 4 modes

MCS Index	Modulation				R	N_{TBPS}	N_{SD}	N_{SP}	N_{CBPS}	N_{DBPS}	Data rate (Mbps)	
	Stream 1	Stream 2	Stream 3	Stream 4							800 ns GI	400ns GI
53	16-QAM	QPSK	QPSK	QPSK	½	10	52	4	520	260	65	72.2
54	16-QAM	16-QAM	QPSK	QPSK	½	12	52	4	624	312	78	86.7
55	16-QAM	16-QAM	16-QAM	QPSK	½	14	52	4	728	364	91	101.1
56	64-QAM	QPSK	QPSK	QPSK	½	12	52	4	624	312	78	86.7
57	64-QAM	16-QAM	QPSK	QPSK	½	14	52	4	728	364	91	101.1
58	64-QAM	16-QAM	16-QAM	QPSK	½	16	52	4	832	416	104	115.6
59	64-QAM	16-QAM	16-QAM	16-QAM	½	18	52	4	936	468	117	130.0
60	64-QAM	64-QAM	QPSK	QPSK	½	16	52	4	832	416	104	115.6

Exhibit 1015
Ericsson Inc. v. Woodbury Wireless LLC
Page 000074

61	64-QAM	64-QAM	16-QAM	QPSK	½	18	52	4	936	468	117	130.0
62	64-QAM	64-QAM	16-QAM	16-QAM	½	20	52	4	1040	520	130	144.4
63	64-QAM	64-QAM	64-QAM	QPSK	½	20	52	4	1040	520	130	144.4
64	64-QAM	64-QAM	64-QAM	16-QAM	½	22	52	4	1144	572	143	158.9
65	16-QAM	QPSK	QPSK	QPSK	¾	10	52	4	520	390	97.5	108.3
66	16-QAM	16-QAM	QPSK	QPSK	¾	12	52	4	624	468	117	130.0
67	16-QAM	16-QAM	16-QAM	QPSK	¾	14	52	4	728	546	136.5	151.7
68	64-QAM	QPSK	QPSK	QPSK	¾	12	52	4	624	468	117	130.0
69	64-QAM	16-QAM	QPSK	QPSK	¾	14	52	4	728	546	136.5	151.7
70	64-QAM	16-QAM	16-QAM	QPSK	¾	16	52	4	832	624	156	173.3
71	64-QAM	16-QAM	16-QAM	16-QAM	¾	18	52	4	936	702	175.5	195.0
72	64-QAM	64-QAM	QPSK	QPSK	¾	16	52	4	832	624	156	173.3
73	64-QAM	64-QAM	16-QAM	QPSK	¾	18	52	4	936	702	175.5	195.0
74	64-QAM	64-QAM	16-QAM	16-QAM	¾	20	52	4	1040	780	195	216.7
75	64-QAM	64-QAM	64-QAM	QPSK	¾	20	52	4	1040	780	195	216.7
76	64-QAM	64-QAM	64-QAM	16-QAM	¾	22	52	4	1144	858	214.5	238.3

Table A-13—Rate-dependent parameters for optional 40 MHz, N_{SS} = 2 modes

MCS Index	Modulation		R	N_{TBPS}	N_{SD}	N_{SP}	N_{CBPS}	N_{DBPS}	Data rate (Mbps)	
	Stream 1	Stream 2							800 ns GI	400ns GI
33	16-QAM	QPSK	½	6	108	6	648	324	81	90
34	64-QAM	QPSK	½	8	108	6	864	432	108	120
35	64-QAM	16-QAM	½	10	108	6	1080	540	135	150
36	16-QAM	QPSK	3/4	6	108	6	648	486	121.5	135
37	64-QAM	QPSK	¾	8	108	6	864	648	162	180
38	64-QAM	16-QAM	3/4	10	108	6	1080	810	202.5	225

Exhibit 1015
Ericsson Inc. v. Woodbury Wireless LLC
Page 000075

Table A-14 - Rate-dependent parameters for optional 40 MHz, N_{SS} = 3 modes

MCS Index	Modulation			R	N_{TBPS}	N_{SD}	N_{SP}	N_{CBPS}	N_{DBPS}	Data rate (Mbps)	
	Stream 1	Stream 2	Stream 3							800 ns GI	400ns GI
39	16-QAM	QPSK	QPSK	½	8	108	6	864	432	108	120
40	16-QAM	16-QAM	QPSK	½	10	108	6	1080	540	135	150
41	64-QAM	QPSK	QPSK	½	10	108	6	1080	540	135	150
42	64-QAM	16-QAM	QPSK	½	12	108	6	1296	648	162	180
43	64-QAM	16-QAM	16-QAM	½	14	108	6	1512	756	189	210
44	64-QAM	64-QAM	QPSK	½	14	108	6	1512	756	189	210
45	64-QAM	64-QAM	16-QAM	½	16	108	6	1728	864	216	240
46	16-QAM	QPSK	QPSK	¾	8	108	6	864	648	162	180
47	16-QAM	16-QAM	QPSK	¾	10	108	6	1080	810	202.5	225
48	64-QAM	QPSK	QPSK	¾	10	108	6	1080	810	202.5	225
49	64-QAM	16-QAM	QPSK	¾	12	108	6	1296	972	243	270
50	64-QAM	16-QAM	16-QAM	¾	14	108	6	1512	1134	283.5	315
51	64-QAM	64-QAM	QPSK	¾	14	108	6	1512	1134	283.5	315
52	64-QAM	64-QAM	16-QAM	¾	16	108	6	1728	1296	324	360

Table A-15—Rate-dependent parameters for optional 40 MHz, N_{SS} = 4 modes

MCS Index	Modulation				R	N_{TBPS}	N_{SD}	N_{SP}	N_{CBPS}	N_{DBPS}	Data rate (Mbps)	
	Stream 1	Stream 2	Stream 3	Stream 4							800 ns GI	400ns GI
53	16-QAM	QPSK	QPSK	QPSK	½	10	108	6	1080	540	135	150
54	16-QAM	16-QAM	QPSK	QPSK	½	12	108	6	1296	648	162	180
55	16-QAM	16-QAM	16-QAM	QPSK	½	14	108	6	1512	756	189	210
56	64-QAM	QPSK	QPSK	QPSK	½	12	108	6	1296	648	162	180
57	64-QAM	16-QAM	QPSK	QPSK	½	14	108	6	1512	756	189	210
58	64-QAM	16-QAM	16-QAM	QPSK	½	16	108	6	1728	864	216	240
59	64-QAM	16-QAM	16-QAM	16-QAM	½	18	108	6	1944	972	243	270
60	64-QAM	64-QAM	QPSK	QPSK	½	16	108	6	1728	864	216	240

Exhibit 1015
Ericsson Inc. v. Woodbury Wireless LLC
Page 000076

61	64-QAM	64-QAM	16-QAM	QPSK	½	18	108	6	1944	972	243	270
62	64-QAM	64-QAM	16-QAM	16-QAM	½	20	108	6	2160	1080	270	300
63	64-QAM	64-QAM	64-QAM	QPSK	½	20	108	6	2160	1080	270	300
64	64-QAM	64-QAM	64-QAM	16-QAM	½	22	108	6	2376	1188	297	330
65	16-QAM	QPSK	QPSK	QPSK	¾	10	108	6	1080	810	202.5	225
66	16-QAM	16-QAM	QPSK	QPSK	¾	12	108	6	1296	972	243	270
67	16-QAM	16-QAM	16-QAM	QPSK	¾	14	108	6	1512	1134	283.5	315
68	64-QAM	QPSK	QPSK	QPSK	¾	12	108	6	1296	972	243	270
69	64-QAM	16-QAM	QPSK	QPSK	¾	14	108	6	1512	1134	283.5	315
70	64-QAM	16-QAM	16-QAM	QPSK	¾	16	108	6	1728	1296	324	360
71	64-QAM	16-QAM	16-QAM	16-QAM	¾	18	108	6	1944	1458	364.5	405
72	64-QAM	64-QAM	QPSK	QPSK	¾	16	108	6	1728	1296	324	360
73	64-QAM	64-QAM	16-QAM	QPSK	¾	18	108	6	1944	1458	364.5	405
74	64-QAM	64-QAM	16-QAM	16-QAM	¾	20	108	6	2160	1620	405	450
75	64-QAM	64-QAM	64-QAM	QPSK	¾	20	108	6	2160	1620	405	450
76	64-QAM	64-QAM	64-QAM	16-QAM	¾	22	108	6	2376	1782	445.5	495

Exhibit 1015
Ericsson Inc. v. Woodbury Wireless LLC
Page 000077

Appendix B – LDPC Matrix Definitions

(normative)

Table B.1
Matrix prototypes of parity-check matrices for codeword block length *n*= 648 bits. Subblock size is *Z*= 27 bits.

(a)
Code rate *R*= 1/2.

0	–	–	–	0	0	–	–	0	–	–	0	1	0	–	–	–	–	–	–	–	–	–	–
22	0	–	–	17	–	0	0	12	–	–	–	–	0	0	–	–	–	–	–	–	–	–	–
6	–	0	–	10	–	–	–	24	–	0	–	–	–	0	0	–	–	–	–	–	–	–	–
2	–	–	0	20	–	–	–	25	0	–	–	–	–	–	0	0	–	–	–	–	–	–	–
23	–	–	–	3	–	–	–	0	–	9	11	–	–	–	–	0	0	–	–	–	–	–	–
24	–	23	1	17	–	3	–	10	–	–	–	–	–	–	–	–	0	0	–	–	–	–	–
25	–	–	–	8	–	–	–	7	18	–	–	0	–	–	–	–	–	0	0	–	–	–	–
13	24	–	–	0	–	8	–	6	–	–	–	–	–	–	–	–	–	–	0	0	–	–	–
7	20	–	16	22	10	–	–	23	–	–	–	–	–	–	–	–	–	–	–	0	0	–	–
11	–	–	–	19	–	–	–	13	–	3	17	–	–	–	–	–	–	–	–	–	0	0	–
25	–	8	–	23	18	–	14	9	–	–	–	–	–	–	–	–	–	–	–	–	–	0	0
3	–	–	–	16	–	–	2	25	5	–	–	1	–	–	–	–	–	–	–	–	–	–	0

(b)
Code rate *R*= 2/3.

25	26	14	–	20	–	2	–	4	–	–	8	–	16	–	18	1	0	–	–	–	–	–	–
10	9	15	11	–	0	–	1	–	–	18	–	8	–	10	–	–	0	0	–	–	–	–	–
16	2	20	26	21	–	6	–	1	26	–	7	–	–	–	–	–	–	0	0	–	–	–	–
10	13	5	0	–	3	–	7	–	–	26	–	–	13	–	16	–	–	–	0	0	–	–	–
23	14	24	–	12	–	19	–	17	–	–	–	20	–	21	–	0	–	–	–	0	0	–	–
6	22	9	20	–	25	–	17	–	8	–	14	–	18	–	–	–	–	–	–	–	0	0	–
14	23	21	11	20	–	24	–	18	–	19	–	–	–	–	22	–	–	–	–	–	–	0	0
17	11	11	20	–	21	–	26	–	3	–	–	18	–	26	–	1	–	–	–	–	–	–	0

(c)
Code rate *R*= 3/4.

16	17	22	24	9	3	14	–	4	2	7	–	26	–	2	–	21	–	1	0	–	–	–	–
25	12	12	3	3	26	6	21	–	15	22	–	15	–	4	–	–	16	–	0	0	–	–	–
25	18	26	16	22	23	9	–	0	–	4	–	4	–	8	23	11	–	–	–	0	0	–	–
9	7	0	1	17	–	–	7	3	–	3	23	–	16	–	–	21	–	0	–	–	0	0	–
24	5	26	7	1	–	–	15	24	15	–	8	–	13	–	13	–	11	–	–	–	–	0	0
2	2	19	14	24	1	15	19	–	21	–	2	–	24	–	3	–	2	1	–	–	–	–	0

Exhibit 1015
Ericsson Inc. v. Woodbury Wireless LLC
Page 000078

(d)

Code rate *R*= 5/6.

17	13	8	21	9	3	18	12	10	0	4	15	19	2	5	10	26	19	13	13	1	0	-	-
3	12	11	14	11	25	5	18	0	9	2	26	26	10	24	7	14	20	4	2	-	0	0	-
22	16	4	3	10	21	12	5	21	14	19	5	-	8	5	18	11	5	5	15	0	-	0	0
7	7	14	14	4	16	16	24	24	10	1	7	15	6	10	26	8	18	21	14	1	-	-	0

Table B.2
Matrix prototypes of parity-check matrices for codeword block length *n*= 1296 bits. Subblock size is *Z*= 54 bits.

(a)

Code rate *R*= 1/2.

40	-	-	-	22	-	49	23	43	-	-	-	1	0	-	-	-	-	-	-	-	-	-	-
50	1	-	-	48	35	-	-	13	-	30	-	-	0	0	-	-	-	-	-	-	-	-	-
39	50	-	-	4	-	2	-	-	-	-	49	-	-	0	0	-	-	-	-	-	-	-	-
33	-	-	38	37	-	-	4	1	-	-	-	-	-	-	0	0	-	-	-	-	-	-	-
45	-	-	-	0	22	-	-	20	42	-	-	-	-	-	-	0	0	-	-	-	-	-	-
51	-	-	48	35	-	-	-	44	-	18	-	-	-	-	-	-	0	0	-	-	-	-	-
47	11	-	-	-	17	-	-	51	-	-	-	0	-	-	-	-	-	0	0	-	-	-	-
5	-	25	-	6	-	45	-	13	40	-	-	-	-	-	-	-	-	-	0	0	-	-	-
33	-	-	34	24	-	-	-	23	-	-	46	-	-	-	-	-	-	-	-	0	0	-	-
1	-	27	-	1	-	-	-	38	-	44	-	-	-	-	-	-	-	-	-	-	0	0	-
-	18	-	-	23	-	-	8	0	35	-	-	-	-	-	-	-	-	-	-	-	-	0	0
49	-	17	-	30	-	-	-	34	-	-	19	1	-	-	-	-	-	-	-	-	-	-	0

(b)

Code rate *R*= 2/3.

39	31	22	43	-	40	4	-	11	-	-	50	-	-	-	6	1	0	-	-	-	-	-	-
25	52	41	2	6	-	14	-	34	-	-	-	24	-	37	-	-	0	0	-	-	-	-	-
43	31	29	0	21	-	28	-	-	2	-	-	7	-	17	-	-	-	0	0	-	-	-	-
20	33	48	-	4	13	-	26	-	-	22	-	-	46	42	-	-	-	-	0	0	-	-	-
45	7	18	51	12	25	-	-	-	50	-	-	5	-	-	-	0	-	-	-	0	0	-	-
35	40	32	16	5	-	-	18	-	-	43	51	-	32	-	-	-	-	-	-	-	0	0	-
9	24	13	22	28	-	-	37	-	-	25	-	-	52	-	13	-	-	-	-	-	-	0	0
32	22	4	21	16	-	-	-	27	28	-	38	-	-	-	8	1	-	-	-	-	-	-	0

(c)

Code rate *R*= 3/4.

39	40	51	41	3	29	8	36	-	14	-	6	-	33	-	11	-	4	1	0	-	-	-	-
48	21	47	9	48	35	51	-	38	-	28	-	34	-	50	-	50	-	-	0	0	-	-	-
30	39	28	42	50	39	5	17	-	6	-	18	-	20	-	15	-	40	-	-	0	0	-	-
29	0	1	43	36	30	47	-	49	-	47	-	3	-	35	-	34	-	0	-	-	0	0	-
1	32	11	23	10	44	12	7	-	48	-	4	-	9	-	17	-	16	-	-	-	-	0	0
13	7	15	47	23	16	47	-	43	-	29	-	52	-	2	-	53	-	1	-	-	-	-	0

Exhibit 1015
Ericsson Inc. v. Woodbury Wireless LLC
Page 000079

(d)

Code rate *R*= 5/6.

48	29	37	52	2	16	6	14	53	31	34	5	18	42	53	31	45	-	46	52	1	0	-	-
17	4	30	7	43	11	24	6	14	21	6	39	17	40	47	7	15	41	19	-	-	0	0	-
7	2	51	31	46	23	16	11	53	40	10	7	46	53	33	35	-	25	35	38	0	-	0	0
19	48	41	1	10	7	36	47	5	29	52	52	31	10	26	6	3	2	-	51	1	-	-	0

Table B.3
Matrix prototypes of parity-check matrices for codeword block length *n*=1944 bits.
Subblock size is *Z* = 81 bits.

(a)

Code rate *R*= 1/2.

57	-	-	-	50	-	11	-	50	-	79	-	1	0	-	-	-	-	-	-	-	-	-	-
3	-	28	-	0	-	-	-	55	7	-	-	-	0	0	-	-	-	-	-	-	-	-	-
30	-	-	-	24	37	-	-	56	14	-	-	-	-	0	0	-	-	-	-	-	-	-	-
62	53	-	-	53	-	-	3	35	-	-	-	-	-	-	0	0	-	-	-	-	-	-	-
40	-	-	20	66	-	-	22	28	-	-	-	-	-	-	-	0	0	-	-	-	-	-	-
0	-	-	-	8	-	42	-	50	-	-	8	-	-	-	-	-	0	0	-	-	-	-	-
69	79	79	-	-	-	56	-	52	-	-	-	0	-	-	-	-	-	0	0	-	-	-	-
65	-	-	-	38	57	-	-	72	-	27	-	-	-	-	-	-	-	-	0	0	-	-	-
64	-	-	-	14	52	-	-	30	-	-	32	-	-	-	-	-	-	-	-	0	0	-	-
-	45	-	70	0	-	-	-	77	9	-	-	-	-	-	-	-	-	-	-	-	0	0	-
2	56	-	57	35	-	-	-	-	-	12	-	-	-	-	-	-	-	-	-	-	-	0	0
24	-	61	-	60	-	-	27	51	-	-	16	1	-	-	-	-	-	-	-	-	-	-	0

(b)

Code rate *R*= 2/3.

61	75	4	63	56	-	-	-	-	-	-	8	-	2	17	25	1	0	-	-	-	-	-	-
56	74	77	20	-	-	-	64	24	4	67	-	7	-	-	-	-	0	0	-	-	-	-	-
28	21	68	10	7	14	65	-	-	-	23	-	-	-	75	-	-	-	0	0	-	-	-	-
48	38	43	78	76	-	-	-	-	5	36	-	15	72	-	-	-	-	-	0	0	-	-	-
40	2	53	25	-	52	62	-	20	-	-	44	-	-	-	-	0	-	-	-	0	0	-	-
69	23	64	10	22	-	21	-	-	-	-	-	68	23	29	-	-	-	-	-	-	0	0	-
12	0	68	20	55	61	-	40	-	-	-	52	-	-	-	44	-	-	-	-	-	-	0	0
58	8	34	64	78	-	-	11	78	24	-	-	-	-	-	58	1	-	-	-	-	-	-	0

Exhibit 1015
Ericsson Inc. v. Woodbury Wireless LLC
Page 000080

(c)

Code rate *R*= 3/4.

48	29	28	39	9	61	-	-	-	63	45	80	-	-	-	37	32	22	1	0	-	-	-	-
4	49	42	48	11	30	-	-	-	49	17	41	37	15	-	54	-	-	-	0	0	-	-	-
35	76	78	51	37	35	21	-	17	64	-	-	-	59	7	-	-	32	-	-	0	0	-	-
9	65	44	9	54	56	73	34	42	-	-	-	35	-	-	-	46	39	0	-	-	0	0	-
3	62	7	80	68	26	-	80	55	-	36	-	26	-	9	-	72	-	-	-	-	-	0	0
26	75	33	21	69	59	3	38	-	-	-	35	-	62	36	26	-	-	1	-	-	-	-	0

(d)

Code rate *R*= 5/6.

13	48	80	66	4	74	7	30	76	52	37	60	-	49	73	31	74	73	23	-	1	0	-	-
69	63	74	56	64	77	57	65	6	16	51	-	64	-	68	9	48	62	54	27	-	0	0	-
51	15	0	80	24	25	42	54	44	71	71	9	67	35	-	58	-	29	-	53	0	-	0	0
16	29	36	41	44	56	59	37	50	24	-	65	4	65	52	-	4	-	73	52	1	-	-	0

Exhibit 1015
Ericsson Inc. v. Woodbury Wireless LLC
Page 000081

Appendix C – Acronyms

BPSK	Binary Phase Shift Keying
CS	Cyclic Shift
CSD	Cyclic Shift Diversity
ECC	Error Correcting Code
EPP	Extended Phy Protection
FEC	Forward Error Correction
GF	Green Field
GI	Guard Interval
HT	High Throughput
LDPC	Low Density Parity Check
LDPCC	Low Density Parity Check Codes
LSB	Least Significant Bit
LTF	Long Training Field
MCS	Modulation and Coding Scheme
MIMO	Multiple Input Multiple Output
MM	Mixed Mode
MSB	Most Significant Bit
OFDM	Orthogonal Frequency Division Multiplexing
PAPR	Peak to Average Power Ratio
QAM	Quadrature Amplitude Modulation
QPSK	Quadrature Phase Shift Keying
STA	Station
STBC	Space Time Block Codes
STF	Short Training Field
TxBF	Transmit Beam Forming

Exhibit 1015
Ericsson Inc. v. Woodbury Wireless LLC
Page 000082