US010211895B2

(12) **United States Patent**
Lastinger et al.

(10) **Patent No.: US 10,211,895 B2**
(45) **Date of Patent: *Feb. 19, 2019**

(54) **MIMO METHODS AND SYSTEMS**

(71) Applicant: **Woodbury Wireless LLC**, Pflugerville, TX (US)

(72) Inventors: **Roc Lastinger**, Cave Creek, AZ (US); **John Spenik**, Scottsdale, AZ (US); **Brian C Woodbury**, Gilbert, AZ (US)

(73) Assignee: **Woodbury Wireless LLC**, Woodville, TX (US)

(*) Notice: Subject to any disclaimer, the term of this patent is extended or adjusted under 35 U.S.C. 154(b) by 0 days.

This patent is subject to a terminal disclaimer.

(21) Appl. No.: **16/120,258**

(22) Filed: **Sep. 1, 2018**

(65) **Prior Publication Data**

US 2018/0375553 A1 Dec. 27, 2018

Related U.S. Application Data

(63) Continuation of application No. 15/824,010, filed on Nov. 28, 2017, now Pat. No. 10,069,548, which is a

(Continued)

(51) **Int. Cl.**
H04B 7/06 (2006.01)
H04B 7/0456 (2017.01)

(Continued)

(52) **U.S. Cl.**
CPC ***H04B 7/0456*** (2013.01); ***H04B 7/024*** (2013.01); ***H04B 7/0413*** (2013.01); ***H04B 7/0495*** (2013.01); ***H04B 17/15*** (2015.01)

(58) **Field of Classification Search**
CPC H04B 7/0456; H04B 7/024; H04B 7/0495; H04B 17/15; H04W 84/12; H04W 84/18; H04W 80/04

(Continued)

(56) **References Cited**

U.S. PATENT DOCUMENTS

2,272,312 A 2/1942 Tunick
3,317,912 A 5/1967 Kelleher

(Continued)

FOREIGN PATENT DOCUMENTS

EP 0022991 A1 1/1981
EP 0435283 A1 7/1991

(Continued)

OTHER PUBLICATIONS

Blum et al., "On the Capacity of Cellular Systems with MIMO," proc. 2001 Fall IEEE Vehicuar Technology Conf., vol. 2, pp. 1220-1224, Atlantic City, NJ, Oct. 2001.

(Continued)

Primary Examiner — Siu M Lee

(57) **ABSTRACT**

A system, method, and computer program product is provided to select at least one channel based on one or more channel characteristics and initiate a first transmission to a first multiple-input-multiple-output (MIMO)-capable portable wireless device, and further initiate a second transmission to a second multiple-input-multiple-output (MIMO)-capable portable wireless device, such that at least a portion of the first transmission occurs simultaneously with at least a portion of the second transmission and both occur via a first wireless protocol; and is further configured to initiate a third transmission to a third multiple-input-multiple-output (MIMO)-capable portable wireless device via a second wireless protocol including a 802.11n protocol, where the first wireless protocol includes another 802.11 protocol other than the 802.11n protocol.

30 Claims, 8 Drawing Sheets

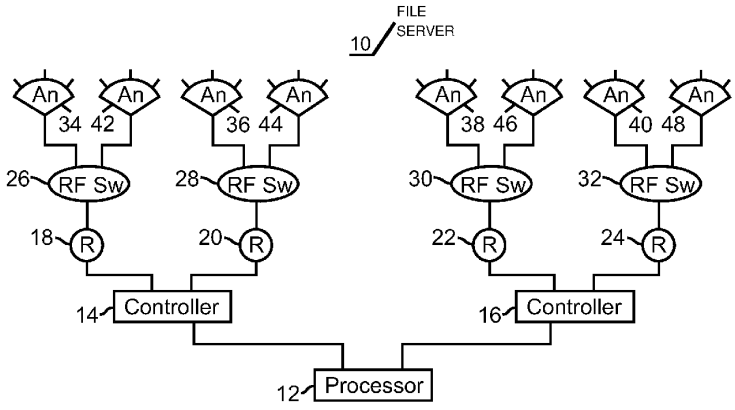

Related U.S. Application Data

continuation of application No. 15/406,661, filed on Jan. 13, 2017, now Pat. No. 9,859,963, which is a continuation of application No. 14/952,874, filed on Nov. 25, 2015, now Pat. No. 9,584,197, which is a continuation of application No. 14/476,628, filed on Sep. 3, 2014, now Pat. No. 9,503,163, which is a continuation of application No. 13/348,523, filed on Jan. 11, 2012, now Pat. No. 8,855,089, which is a continuation of application No. 13/118,386, filed on May 28, 2011, now Pat. No. 8,345,651, which is a continuation of application No. 11/709,431, filed on Feb. 21, 2007, now Pat. No. 8,009,646.

(60) Provisional application No. 60/743,376, filed on Feb. 28, 2006.

(51) **Int. Cl.**

H04B 17/15	(2015.01)
H04B 7/0413	(2017.01)
H04B 7/024	(2017.01)
H04B 7/0495	(2017.01)

(58) **Field of Classification Search**

USPC 370/338, 328; 455/422.1, 424, 443, 455/452.2; 375/259, 260, 267, 285, 295, 375/296, 299

See application file for complete search history.

(56) **References Cited**

U.S. PATENT DOCUMENTS

3,681,770	A	8/1972	Alford
3,803,625	A	4/1974	Nemit
4,101,901	A	7/1978	Kommrusch
4,128,740	A	12/1978	Graziano
4,144,496	A	3/1979	Cunningham et al.
4,475,010	A	10/1984	Huensch et al.
4,736,453	A	4/1988	Schloemer
4,825,222	A	4/1989	Butcher
4,829,554	A	5/1989	Barnes et al.
5,113,525	A	5/1992	Andoh
5,134,709	A	7/1992	Bi et al.
5,161,249	A	11/1992	Meche et al.
5,212,930	A	5/1993	Raudat
5,265,263	A	11/1993	Ramsdale et al.
5,276,907	A	1/1994	Meidan
5,307,507	A	4/1994	Kanai
5,365,571	A	11/1994	Rha et al.
5,396,649	A	3/1995	Hamabe
5,404,574	A	4/1995	Benveniste
5,448,761	A	9/1995	Ushirokawa
5,475,864	A	12/1995	Hamabe
5,491,833	A	2/1996	Hamabe
5,491,837	A	2/1996	Haartsen
5,507,008	A	4/1996	Kanai et al.
5,548,813	A	8/1996	Charas et al.
5,574,977	A	11/1996	Joseph et al.
5,590,399	A	12/1996	Matsumoto et al.
5,603,082	A	2/1997	Hamabe
5,606,727	A	2/1997	Ueda
5,613,200	A	3/1997	Hamabe
5,649,292	A	7/1997	Doner
5,684,491	A	11/1997	Newman et al.
5,697,059	A	12/1997	Carney
5,722,043	A	2/1998	Rappaport et al.
5,726,978	A	3/1998	Frodigh et al.
5,732,353	A	3/1998	Haartsen
5,740,536	A	4/1998	Benveniste
5,771,449	A	6/1998	Blasing et al.
5,771,454	A	6/1998	Ohsawa
5,787,352	A	7/1998	Benveniste
5,790,551	A	8/1998	Chan
5,809,423	A	9/1998	Benveniste
5,818,385	A	10/1998	Bartholomew
5,828,948	A	10/1998	Almgren et al.
5,835,859	A	11/1998	Doner
5,887,263	A	3/1999	Ishii
5,896,573	A	4/1999	Yang et al.
5,901,356	A	5/1999	Hudson
5,926,763	A	7/1999	Greene, Sr. et al.
5,956,643	A	9/1999	Benveniste
5,960,349	A	9/1999	Chheda et al.
5,963,865	A	10/1999	Desgagne et al.
5,969,689	A	10/1999	Martek et al.
5,974,327	A	10/1999	Agrawal et al.
6,002,934	A	12/1999	Boyer et al.
6,009,332	A	12/1999	Haartsen
6,023,459	A	2/2000	Clark et al.
6,047,175	A	4/2000	Trompower
6,047,187	A	4/2000	Haartsen
6,047,189	A	4/2000	Yun et al.
6,055,230	A	4/2000	Feuerstein et al.
6,069,591	A	5/2000	Smith
6,070,090	A	5/2000	Feuerstein
6,091,954	A	7/2000	Haartsen et al.
6,095,820	A	8/2000	Luxon et al.
6,104,935	A	8/2000	Smith et al.
6,108,321	A	8/2000	Anderson et al.
6,112,092	A	8/2000	Benveniste
6,118,767	A	9/2000	Shen et al.
6,119,011	A	9/2000	Borst et al.
6,128,497	A	10/2000	Faruque
6,128,498	A	10/2000	Benveniste
6,134,442	A	10/2000	Borst et al.
6,138,024	A	10/2000	Evans et al.
6,154,654	A	11/2000	Mao
6,154,655	A	11/2000	Borst et al.
6,178,328	B1	1/2001	Tang et al.
6,181,918	B1	1/2001	Benveniste
6,219,541	B1	4/2001	Brodie
6,219,554	B1	4/2001	Eswara et al.
6,229,486	B1	5/2001	Krile
6,230,016	B1	5/2001	Benveniste
6,243,584	B1	6/2001	O'Byrne
6,246,674	B1	6/2001	Feuerstein et al.
6,249,256	B1	6/2001	Luxon et al.
6,259,685	B1	7/2001	Rinne et al.
6,266,527	B1	7/2001	Mintz
6,272,337	B1	8/2001	Mount et al.
6,272,348	B1	8/2001	Saario et al.
6,278,723	B1	8/2001	Meihofer et al.
6,295,453	B1	9/2001	Desgagne et al.
6,304,762	B1	10/2001	Myers et al.
6,317,598	B1	11/2001	Wiesen et al.
6,330,429	B1	12/2001	He
6,334,057	B1	12/2001	Malmgren et al.
6,351,643	B1	2/2002	Haartsen
6,360,107	B1	3/2002	Lin et al.
6,388,999	B1	5/2002	Gorsuch et al.
6,400,697	B1	6/2002	Leung et al.
6,400,704	B2	6/2002	Mikuni et al.
6,400,955	B1	6/2002	Kawabata et al.
6,405,043	B1	6/2002	Jensen et al.
6,405,058	B2	6/2002	Bobier
6,418,316	B2	7/2002	Hildebrand et al.
6,421,542	B1	7/2002	Sandler et al.
6,438,386	B2	8/2002	Joshi et al.
6,459,901	B1	10/2002	Chawla et al.
6,463,301	B1	10/2002	Bevan et al.
6,470,183	B1	10/2002	Herrig
6,470,195	B1	10/2002	Meyer
6,473,467	B1	10/2002	Wallace et al.
6,480,558	B1	11/2002	Ottosson et al.
6,486,832	B1	11/2002	Abramov et al.
6,487,414	B1	11/2002	Tanay et al.
6,493,331	B1	12/2002	Walton et al.
6,496,490	B1	12/2002	Andrews et al.
6,497,599	B1	12/2002	Johnson et al.
6,505,045	B1	1/2003	Hills et al.
6,507,568	B2	1/2003	Kumar et al.
6,519,240	B1	2/2003	Dillinger et al.

(56) **References Cited**

U.S. PATENT DOCUMENTS

6,522,885 B1 2/2003 Tang et al.
6,531,985 B1 3/2003 Jones et al.
6,539,203 B1 3/2003 Herrig
6,542,485 B1 4/2003 Mujtaba
6,542,736 B1 4/2003 Parkvall et al.
6,549,169 B1 4/2003 Matsuyoshi et al.
6,560,443 B1 5/2003 Vaisanen et al.
6,580,912 B2 6/2003 Leung et al.
6,591,108 B1 7/2003 Herrig
6,597,920 B2 7/2003 Yegani et al.
6,597,927 B1 7/2003 Eswara et al.
6,606,499 B1 8/2003 Verrier et al.
6,615,047 B1 9/2003 Yasooka et al.
6,650,655 B2 11/2003 Alvesalo et al.
6,654,612 B1 11/2003 Avidor et al.
6,690,657 B1 2/2004 Lau et al.
6,693,510 B1 2/2004 Yamaguchi
6,697,626 B1 2/2004 Eidson et al.
6,708,036 B2 3/2004 Proctor et al.
6,728,544 B1 4/2004 Boyer et al.
6,738,599 B2 5/2004 Black et al.
6,741,837 B1 5/2004 Nakano et al.
6,744,743 B2 6/2004 Walton et al.
6,748,218 B1 6/2004 Johnson et al.
6,774,864 B2 8/2004 Evans et al.
6,795,409 B1 9/2004 Youssefmir et al.
6,842,632 B2 1/2005 Raghothaman et al.
6,870,515 B2 3/2005 Kitchener et al.
6,871,073 B1 3/2005 Boyer et al.
6,889,047 B2 5/2005 Ishida
6,898,431 B1 5/2005 Peele
6,906,674 B2 6/2005 McKinzie, III et al.
6,914,577 B2 7/2005 McCandless
6,930,991 B2 8/2005 Ozluturk
6,940,845 B2 9/2005 Benveniste
6,952,454 B1 10/2005 Jalali et al.
6,975,666 B2 12/2005 Affes et al.
6,999,772 B2 2/2006 Song et al.
7,006,464 B1 2/2006 Gopalakrishnan et al.
7,010,015 B2 3/2006 Hervey, Jr. et al.
7,039,441 B1 5/2006 Reudink et al.
7,042,856 B2 5/2006 Walton et al.
7,042,858 B1 5/2006 Ma et al.
7,047,473 B2 5/2006 Hwang et al.
7,050,812 B2 5/2006 Boyer et al.
7,069,009 B2 6/2006 Li et al.
7,085,572 B2 8/2006 Ishida
7,085,579 B2 8/2006 Mizutani et al.
7,095,709 B2 8/2006 Walton et al.
7,103,325 B1 9/2006 Jia et al.
7,120,395 B2 10/2006 Tong et al.
7,130,636 B2 10/2006 Kitazawa et al.
7,133,380 B1 11/2006 Winters et al.
7,136,654 B1 11/2006 Hogberg et al.
7,145,880 B2 12/2006 Saxena et al.
7,149,239 B2 12/2006 Hudson
7,149,255 B2 12/2006 Chenu-Tournier et al.
7,167,690 B2 1/2007 Baker et al.
7,171,248 B1 1/2007 Brown
7,177,298 B2 2/2007 Chillariga et al.
7,180,877 B1 2/2007 Benveniste
7,181,258 B2 2/2007 Lin et al.
7,184,772 B2 2/2007 Lim et al.
7,187,933 B2 3/2007 Song et al.
7,193,562 B2 3/2007 Shtrom et al.
7,194,017 B2 3/2007 Hervey, Jr. et al.
7,200,405 B2 4/2007 Rudolf et al.
7,202,824 B1 4/2007 Sanelli et al.
7,212,822 B1 5/2007 Vicharelli et al.
7,216,267 B2 5/2007 Santraine et al.
7,224,977 B2 5/2007 Cavalli et al.
7,233,810 B2 6/2007 Medlock et al.
7,257,376 B2 8/2007 Reudink
7,274,944 B2 * 9/2007 Lastinger H01Q 3/2605 455/464
7,280,467 B2 10/2007 Smee et al.
7,280,829 B2 10/2007 Rudolf
7,292,198 B2 11/2007 Shtrom et al.
7,302,278 B2 11/2007 Lastinger et al.
7,305,246 B2 12/2007 Lastinger et al.
7,308,270 B2 12/2007 Lastinger et al.
7,315,533 B2 1/2008 Theobold et al.
7,317,750 B2 1/2008 Shattil
7,336,930 B2 2/2008 Larsson et al.
7,336,956 B2 2/2008 Halonen et al.
7,348,930 B2 3/2008 Lastinger et al.
7,349,480 B2 3/2008 Tsatsanis et al.
7,349,496 B2 3/2008 Jia et al.
7,349,701 B2 3/2008 Lastinger et al.
7,358,912 B1 4/2008 Kish et al.
7,359,675 B2 4/2008 Lastinger et al.
7,362,280 B2 4/2008 Shtrom et al.
7,366,178 B2 4/2008 Lee et al.
7,373,151 B1 5/2008 Ahmed
7,373,176 B2 5/2008 Chotkowski et al.
7,382,840 B2 6/2008 Molisch et al.
7,386,036 B2 6/2008 Pasanen et al.
7,392,014 B2 6/2008 Baker et al.
7,394,860 B2 7/2008 Tong et al.
7,397,864 B2 7/2008 Tarokh et al.
7,400,860 B2 7/2008 Lastinger et al.
7,403,541 B2 7/2008 Yi et al.
7,415,288 B1 8/2008 Hou et al.
7,418,273 B2 8/2008 Tomoe et al.
7,424,298 B2 9/2008 Lastinger et al.
7,428,269 B2 9/2008 Sampath et al.
7,466,985 B1 12/2008 Handforth et al.
7,469,024 B2 12/2008 Khayrallah et al.
7,489,282 B2 2/2009 Lastinger et al.
7,496,147 B2 2/2009 Baier et al.
7,498,996 B2 3/2009 Shtrom et al.
7,498,999 B2 3/2009 Shtrom
7,511,680 B2 3/2009 Shtrom et al.
7,512,403 B2 3/2009 Rajkotia et al.
7,522,515 B2 4/2009 Tsatsanis et al.
7,522,526 B2 4/2009 Yi et al.
7,522,552 B2 4/2009 Fein et al.
7,525,486 B2 4/2009 Shtrom et al.
7,535,866 B2 5/2009 Kimble et al.
7,548,506 B2 6/2009 Ma et al.
7,548,752 B2 6/2009 Sampath et al.
7,590,064 B1 9/2009 Zhang et al.
7,594,010 B2 9/2009 Dohler et al.
7,594,151 B2 9/2009 Sutivong et al.
7,595,756 B2 9/2009 Lastinger et al.
7,599,699 B2 10/2009 Lastinger et al.
7,609,790 B2 10/2009 Shah
7,616,959 B2 11/2009 Spenik et al.
7,636,573 B2 12/2009 Walton et al.
7,639,106 B2 12/2009 Shtrom
7,646,343 B2 1/2010 Shtrom et al.
7,652,632 B2 1/2010 Shtrom
7,653,083 B2 1/2010 Liu et al.
7,664,193 B2 2/2010 Jalali et al.
7,664,195 B2 2/2010 Chenu-Tournier et al.
7,675,474 B2 3/2010 Shtrom et al.
7,680,211 B1 3/2010 von der Embse
7,706,477 B2 4/2010 Larsson
7,733,974 B2 6/2010 Chen
7,746,800 B2 6/2010 Raghothaman et al.
7,751,492 B2 7/2010 Jalali et al.
7,768,979 B2 8/2010 Sutivong et al.
7,769,078 B2 8/2010 Cairns et al.
7,773,578 B2 8/2010 Liu
7,773,961 B2 8/2010 Ding et al.
7,796,544 B2 9/2010 Hench
7,808,937 B2 10/2010 McCloud et al.
7,809,073 B2 10/2010 Liu
7,813,441 B2 10/2010 Jalali et al.
7,817,603 B2 10/2010 Liu
7,822,386 B2 10/2010 Lastinger et al.
7,860,502 B2 12/2010 Kim et al.
7,864,735 B2 1/2011 Ma et al.
7,873,319 B2 1/2011 Lastinger et al.

(56) **References Cited**

U.S. PATENT DOCUMENTS

7,876,838	B2	1/2011	Clarkson et al.	
7,876,840	B2	1/2011	Tong et al.	
7,880,683	B2	2/2011	Shtrom et al.	
7,893,882	B2	2/2011	Shtrom	
7,899,497	B2	3/2011	Kish et al.	
7,912,012	B2	3/2011	Ma et al.	
7,924,879	B2	4/2011	Yi et al.	
7,924,949	B2	4/2011	Larsson	
7,929,921	B2	4/2011	Love et al.	
7,961,696	B2	6/2011	Ma et al.	
7,962,826	B2	6/2011	Sutivong et al.	
7,965,252	B2	6/2011	Shtrom et al.	
7,978,608	B2	7/2011	Yi et al.	
7,979,072	B2	7/2011	Senarath et al.	
7,990,841	B2	8/2011	Walton et al.	
7,995,512	B2	8/2011	Kim et al.	
8,005,128	B1	8/2011	Lamba et al.	
8,009,646	B2	8/2011	Lastinger et al.	
8,018,904	B2	9/2011	Hamalainen et al.	
8,018,975	B2	9/2011	Ma et al.	
8,023,466	B2	9/2011	Ma et al.	
8,036,129	B2	10/2011	Yi et al.	
8,045,988	B2	10/2011	Sutivong et al.	
8,050,178	B2	11/2011	Yi et al.	
8,085,814	B2	12/2011	Ma et al.	
8,090,006	B2	1/2012	Narayan et al.	
8,098,683	B2	1/2012	Kent et al.	
8,111,678	B2	2/2012	Lastinger et al.	
8,121,177	B2	2/2012	Narayan et al.	
8,130,854	B2	3/2012	Fischer et al.	
8,139,658	B2	3/2012	Tsatsanis et al.	
8,165,094	B2	4/2012	Ma et al.	
8,194,776	B2	6/2012	Jalali et al.	
8,213,292	B2	7/2012	Ma et al.	
8,238,342	B2	8/2012	Yi et al.	
8,248,993	B2	8/2012	Cai	
8,249,024	B2	8/2012	Ma et al.	
8,254,259	B2	8/2012	Yi et al.	
8,265,675	B2	9/2012	Matsumoto et al.	
8,270,383	B2	9/2012	Lastinger et al.	
8,279,836	B2	10/2012	Ma et al.	
8,289,902	B2	10/2012	Fein et al.	
8,295,884	B2	10/2012	Trivedi et al.	
8,312,142	B2	11/2012	Rinne et al.	
8,325,695	B2	12/2012	Lastinger et al.	
8,331,324	B2	12/2012	Ma et al.	
8,340,072	B2	12/2012	Ma et al.	
8,345,651	B2	1/2013	Lastinger et al.	
8,355,321	B2	1/2013	Yi et al.	
8,391,338	B2	3/2013	Lamba et al.	
8,400,922	B2	3/2013	Yi et al.	
8,428,039	B2	4/2013	Lastinger et al.	
8,428,636	B2	4/2013	Baker et al.	
8,437,760	B2	5/2013	Senarath et al.	
8,437,761	B2	5/2013	Senarath et al.	
8,441,918	B2	5/2013	Ma et al.	
8,442,009	B2	5/2013	Senarath et al.	
8,442,051	B2	5/2013	Yi et al.	
8,446,879	B2	5/2013	Ma et al.	
8,446,892	B2	5/2013	Ji et al.	
8,457,263	B2	6/2013	Lamba et al.	
8,477,803	B2	7/2013	Kent et al.	
8,514,863	B2	8/2013	Yi et al.	
8,515,352	B2	8/2013	Medlock et al.	
8,537,782	B2	9/2013	Ma et al.	
8,547,951	B2	10/2013	Ji et al.	
8,571,132	B2	10/2013	Khandekar et al.	
8,572,250	B2	10/2013	Rinne et al.	
8,582,441	B2	11/2013	Yi et al.	
8,594,252	B2	11/2013	Black et al.	
8,611,305	B2	12/2013	Black et al.	
8,619,713	B2	12/2013	Ma et al.	
8,654,648	B2	2/2014	Yi et al.	
8,654,689	B2	2/2014	McCloud et al.	
8,675,509	B2	3/2014	Sampath et al.	
8,681,684	B2	3/2014	Dohler et al.	
8,706,116	B2	4/2014	Tomoe et al.	
8,724,480	B2	5/2014	Yi et al.	
8,767,885	B2	7/2014	Sampath et al.	
8,780,957	B2	7/2014	Kim et al.	
8,781,399	B2	7/2014	Medlock et al.	
8,830,816	B2	9/2014	Ma et al.	
8,842,581	B2	9/2014	Hottinen	
8,848,765	B2	9/2014	Lamba et al.	
8,855,089	B2	10/2014	Lastinger et al.	
8,909,226	B2	12/2014	Zhang et al.	
8,942,082	B2	1/2015	Shattil	
8,964,912	B2	2/2015	Cairns et al.	
8,971,461	B2	3/2015	Sampath et al.	
9,025,581	B2	5/2015	Ram et al.	
9,036,515	B2	5/2015	Novak et al.	
9,049,610	B2	6/2015	Yi et al.	
9,055,545	B2	6/2015	Black et al.	
9,071,403	B2	6/2015	Novak et al.	
9,100,152	B2	8/2015	Papasakellariou	
9,100,964	B2	8/2015	Fong et al.	
9,496,930	B2 *	11/2016	Lastinger	H04B 7/0495
9,496,931	B2 *	11/2016	Lastinger	H04B 7/0495
9,859,963	B2 *	1/2018	Lastinger	H04B 7/0495
10,063,297	B1 *	8/2018	Lastinger	H04B 7/0495
10,069,548	B2 *	9/2018	Lastinger	H04B 7/0495
2001/0033622	A1	10/2001	Jongren et al.	
2001/0046866	A1	11/2001	Wang	
2001/0053677	A1	12/2001	Schiffer	
2002/0006120	A1	1/2002	Suzuki et al.	
2002/0019233	A1	2/2002	Leung et al.	
2002/0037729	A1	3/2002	Kitazawa et al.	
2002/0039884	A1	4/2002	Raynes et al.	
2002/0051433	A1	5/2002	Affes et al.	
2002/0062472	A1	5/2002	Medlock et al.	
2002/0067309	A1	6/2002	Baker et al.	
2002/0077152	A1	6/2002	Johnson et al.	
2002/0094834	A1	7/2002	Baker et al.	
2002/0119799	A1	8/2002	Moulsley et al.	
2002/0149534	A1	10/2002	Bobier	
2002/0154705	A1	10/2002	Walton et al.	
2002/0159405	A1	10/2002	Garrison et al.	
2002/0168945	A1	11/2002	Hwang et al.	
2002/0173302	A1	11/2002	Baker et al.	
2002/0193146	A1	12/2002	Wallace et al.	
2002/0197984	A1	12/2002	Monin et al.	
2003/0002442	A1	1/2003	Flammer et al.	
2003/0013451	A1	1/2003	Walton	
2003/0043887	A1	3/2003	Hudson	
2003/0072255	A1	4/2003	Ma et al.	
2003/0087645	A1	5/2003	Kim et al.	
2003/0109285	A1	6/2003	Reed et al.	
2003/0123425	A1	7/2003	Walton et al.	
2003/0125040	A1	7/2003	Walton et al.	
2003/0125089	A1	7/2003	Pedersen	
2003/0128705	A1	7/2003	Yi et al.	
2003/0128770	A1	7/2003	Chenu-Tournier et al.	
2003/0131124	A1	7/2003	Yi et al.	
2003/0181180	A1	9/2003	Darabi et al.	
2003/0184490	A1	10/2003	Raiman et al.	
2003/0201937	A1	10/2003	Lee	
2003/0210665	A1	11/2003	Salmenkaita et al.	
2003/0235146	A1	12/2003	Wu et al.	
2003/0235147	A1	12/2003	Walton et al.	
2004/0009791	A1	1/2004	Hiramatsu	
2004/0057530	A1	3/2004	Tarokh et al.	
2004/0066866	A1	4/2004	Tong et al.	
2004/0086027	A1	5/2004	Shattil	
2004/0086064	A1	5/2004	Van Acker et al.	
2004/0106412	A1	6/2004	Laroia et al.	
2004/0116146	A1	6/2004	Sadowsky et al.	
2004/0121774	A1	6/2004	Rajkotia et al.	
2004/0125779	A1	7/2004	Kelton et al.	
2004/0127257	A1	7/2004	Raghothaman et al.	
2004/0131007	A1	7/2004	Smee et al.	
2004/0131025	A1	7/2004	Dohler	
2004/0132494	A1	7/2004	Tirkkonen et al.	
2004/0150580	A1	8/2004	Gaudette et al.	
2004/0174303	A1	9/2004	Duxbury et al.	

(56) **References Cited**

U.S. PATENT DOCUMENTS

2004/0183726 A1 9/2004 Theobold
2004/0196834 A1 10/2004 Ofek et al.
2004/0217913 A1 11/2004 McCandless
2004/0224691 A1 11/2004 Hadad
2004/0253955 A1 12/2004 Love et al.
2005/0002323 A1 1/2005 Hadad
2005/0003763 A1 1/2005 Lastinger et al.
2005/0003865 A1 1/2005 Lastinger et al.
2005/0009476 A1 1/2005 Wu et al.
2005/0018789 A1 1/2005 Jia et al.
2005/0025271 A1 2/2005 Molisch et al.
2005/0026616 A1 2/2005 Cavalli et al.
2005/0037766 A1 2/2005 Hans et al.
2005/0047485 A1 3/2005 Khayrallah et al.
2005/0070294 A1 3/2005 Lyle et al.
2005/0075084 A1 4/2005 Salokannel et al.
2005/0078742 A1 4/2005 Cairns et al.
2005/0085195 A1 4/2005 Tong et al.
2005/0107091 A1 5/2005 Vannithamby et al.
2005/0111376 A1 5/2005 Raghothaman et al.
2005/0129218 A1 6/2005 Kimble et al.
2005/0141495 A1* 6/2005 Lin H04B 7/0617
370/389
2005/0141545 A1 6/2005 Fein et al.
2005/0141593 A1 6/2005 Pasanen et al.
2005/0169396 A1 8/2005 Baier et al.
2005/0208949 A1 9/2005 Chiueh
2005/0245270 A1 11/2005 Sartori et al.
2005/0272432 A1 12/2005 Ji et al.
2005/0277400 A1 12/2005 Shah
2005/0277422 A1 12/2005 Baker et al.
2005/0281228 A1 12/2005 Oh et al.
2006/0002346 A1 1/2006 Sutivong et al.
2006/0013285 A1 1/2006 Kobayashi et al.
2006/0023645 A1 2/2006 Hench
2006/0023666 A1 2/2006 Jalali et al.
2006/0038738 A1 2/2006 Shtrom
2006/0056522 A1 3/2006 Tsatsanis et al.
2006/0059410 A1 3/2006 Santraine et al.
2006/0072629 A1 4/2006 Kent et al.
2006/0077935 A1 4/2006 Hamalainen et al.
2006/0088007 A1 4/2006 Jalali et al.
2006/0093067 A1 5/2006 Jalali et al.
2006/0104334 A1 5/2006 Hervey et al.
2006/0121946 A1 6/2006 Walton et al.
2006/0133519 A1 6/2006 Tsatsanis et al.
2006/0135169 A1 6/2006 Sampath et al.
2006/0146760 A1 7/2006 Khandekar et al.
2006/0148484 A1 7/2006 Zhang et al.
2006/0159160 A1 7/2006 Kim et al.
2006/0182063 A1 8/2006 Ma et al.
2006/0192720 A1 8/2006 Shtrom
2006/0193268 A1 8/2006 Walton et al.
2006/0195576 A1 8/2006 Rinne et al.
2006/0198459 A1 9/2006 Fischer et al.
2006/0209754 A1 9/2006 Ji et al.
2006/0215592 A1 9/2006 Tomoe et al.
2006/0217124 A1 9/2006 Bi et al.
2006/0227730 A1 10/2006 McCloud et al.
2006/0229017 A1 10/2006 Larsson et al.
2006/0233277 A1 10/2006 Chen
2006/0234777 A1 10/2006 Vannithamby et al.
2006/0245509 A1 11/2006 Khan et al.
2006/0252436 A1 11/2006 Tirkkonen et al.
2006/0262750 A1 11/2006 Walton et al.
2006/0268962 A1 11/2006 Cairns et al.
2006/0276212 A1 12/2006 Sampath et al.
2006/0291371 A1 12/2006 Sutivong et al.
2007/0010957 A1 1/2007 Sampath et al.
2007/0014387 A1 1/2007 Chenu-Toumier et al.
2007/0025236 A1 2/2007 Ma et al.
2007/0026807 A1 2/2007 Kish
2007/0054621 A1 3/2007 Larsson
2007/0064586 A1 3/2007 Ma et al.
2007/0066362 A1 3/2007 Ma et al.
2007/0070937 A1 3/2007 Demirhan et al.
2007/0070954 A1 3/2007 Kim et al.
2007/0072550 A1 3/2007 Wang
2007/0081448 A1 4/2007 Ahmed et al.
2007/0081455 A1 4/2007 Kashima et al.
2007/0093273 A1 4/2007 Cai
2007/0104165 A1 5/2007 Hanaoka et al.
2007/0105508 A1 5/2007 Tong et al.
2007/0117559 A1 5/2007 Trivedi et al.
2007/0135125 A1 6/2007 Kim et al.
2007/0135166 A1 6/2007 Ding et al.
2007/0160012 A1 7/2007 Liu
2007/0213062 A1 9/2007 Medlock et al.
2007/0249340 A1 10/2007 Hiltunen et al.
2007/0263735 A1 11/2007 Tong et al.
2007/0280370 A1 12/2007 Liu
2007/0297371 A1 12/2007 Lea
2008/0024382 A1 1/2008 Uddin et al.
2008/0039107 A1 2/2008 Ma et al.
2008/0069032 A1 3/2008 Liu
2008/0076432 A1 3/2008 Senarath et al.
2008/0125154 A1 5/2008 Zirwas et al.
2008/0192682 A1 8/2008 Matsumoto et al.
2008/0199183 A1 8/2008 Liu et al.
2008/0212588 A1 9/2008 Yi et al.
2008/0253375 A1 10/2008 Yi et al.
2008/0268844 A1 10/2008 Ma et al.
2008/0268848 A1 10/2008 Tomoe et al.
2008/0279125 A1 11/2008 Hottinen
2009/0022066 A1 1/2009 Kish et al.
2009/0022098 A1 1/2009 Novak et al.
2009/0060076 A1 3/2009 Ma et al.
2009/0103494 A1 4/2009 Ma et al.
2009/0129334 A1 5/2009 Ma et al.
2009/0168700 A1 7/2009 Yi et al.
2009/0175222 A1 7/2009 Yi et al.
2009/0180411 A1 7/2009 Yi et al.
2009/0252200 A1 10/2009 Dohler et al.
2009/0274232 A1 11/2009 Sutivong et al.
2009/0305711 A1 12/2009 Rinne et al.
2009/0327546 A1 12/2009 Guri et al.
2010/0002585 A1 1/2010 Yi et al.
2010/0002597 A1 1/2010 Sampath et al.
2010/0002618 A1 1/2010 Eichinger et al.
2010/0020815 A1 1/2010 Yi et al.
2010/0034148 A1 2/2010 Zhang et al.
2010/0040034 A1 2/2010 Shah
2010/0061243 A1 3/2010 Yi et al.
2010/0061496 A1 3/2010 Black et al.
2010/0067505 A1 3/2010 Fein et al.
2010/0098014 A1 4/2010 Larsson
2010/0142479 A1 6/2010 Black et al.
2010/0142638 A1 6/2010 Jalali et al.
2010/0238902 A1 9/2010 Ji et al.
2010/0254354 A1 10/2010 Sutivong et al.
2011/0019608 A1 1/2011 Dohler et al.
2011/0019656 A1 1/2011 McCloud et al.
2011/0064066 A1 3/2011 Lamba et al.
2011/0064172 A1 3/2011 Olson et al.
2011/0069742 A1 3/2011 Narayan et al.
2011/0096751 A1 4/2011 Ma et al.
2011/0149869 A1 6/2011 Yi et al.
2011/0149870 A1 6/2011 Yi et al.
2011/0149997 A1 6/2011 Yi et al.
2011/0206108 A1 8/2011 Tsatsanis et al.
2011/0222504 A1 9/2011 Ma et al.
2011/0228870 A1 9/2011 Lastinger et al.
2011/0230141 A1 9/2011 Lastinger et al.
2011/0235618 A1 9/2011 Senarath et al.
2011/0237262 A1 9/2011 Senarath et al.
2011/0244868 A1 10/2011 Senarath et al.
2011/0281603 A1 11/2011 Lastinger et al.
2011/0292974 A1 12/2011 Lamba et al.
2011/0310725 A1 12/2011 Ma et al.
2011/0310846 A1 12/2011 Ma et al.
2011/0310847 A1 12/2011 Ma et al.
2011/0310848 A1 12/2011 Ma et al.
2011/0310874 A1 12/2011 Lastinger et al.
2012/0027136 A1 2/2012 Ma et al.

(56) **References Cited**

U.S. PATENT DOCUMENTS

2012/0044982	A1	2/2012	Sampath et al.
2012/0082270	A1	4/2012	Kent et al.
2012/0147982	A1	6/2012	Lastinger et al.
2012/0243626	A1	9/2012	Ma et al.
2012/0250787	A1	10/2012	Ma et al.
2012/0281676	A1	11/2012	Ma et al.
2012/0287947	A1	11/2012	Yi et al.
2012/0327905	A1	12/2012	Ma et al.
2013/0003526	A1	1/2013	Novak et al.
2013/0010729	A1	1/2013	Novak et al.
2013/0016603	A1	1/2013	Novak et al.
2013/0022020	A1	1/2013	Novak et al.
2013/0077468	A1	3/2013	Ma et al.
2013/0077469	A1	3/2013	Ma et al.
2013/0148609	A1	6/2013	Ram et al.
2013/0155923	A1	6/2013	Yi et al.
2013/0250858	A1	9/2013	Senarath et al.
2013/0301400	A1	11/2013	Ma et al.
2013/0316666	A1	11/2013	Medlock et al.
2013/0322399	A1	12/2013	Ma et al.
2013/0329695	A1	12/2013	Senarath et al.
2014/0003471	A1	1/2014	Lamba et al.
2014/0023046	A1	1/2014	Ma et al.
2014/0036823	A1	2/2014	Ma et al.
2014/0050249	A1	2/2014	Khandekar et al.
2014/0119342	A1	5/2014	Tomoe et al.
2014/0140188	A1	5/2014	Shattil
2014/0140189	A1	5/2014	Shattil
2014/0146916	A1	5/2014	Shattil
2014/0146924	A1	5/2014	Shattil
2014/0187248	A1	7/2014	Black et al.
2014/0226563	A1	8/2014	Yi et al.
2014/0233502	A1	8/2014	Fong et al.
2014/0341323	A1	11/2014	McCloud et al.
2015/0016297	A1	1/2015	Lamba et al.
2015/0065141	A1	3/2015	Ma et al.
2015/0111614	A1	4/2015	Vannithamby et al.
2015/0229573	A1	8/2015	Yi et al.
2015/0244430	A1	8/2015	Shattil

FOREIGN PATENT DOCUMENTS

EP	490554	A2	6/1992
EP	522276	A2	1/1993
EP	571133	A2	11/1993
EP	578197	A2	1/1994
EP	0622925	A1	11/1994
EP	635989	A1	1/1995
EP	0660631	A2	6/1995
EP	0668627	A1	8/1995
EP	0715478	A2	6/1996
EP	0734194	A1	9/1996
EP	0782361	A2	7/1997
EP	0785695	A2	7/1997
EP	802695	A2	10/1997
EP	867096	A1	9/1998
EP	0895436	A2	2/1999
EP	925706	A1	6/1999
EP	0980111	A1	2/2000
EP	0983705	A2	3/2000
EP	1013013	A1	6/2000
EP	1014740	A1	6/2000
EP	1106028	A1	6/2001
EP	1148749	A2	10/2001
EP	1189467	A1	3/2002
EP	1594261	A2	11/2005
FR	2785488	A1	5/2000
JP	57020002		2/1982
JP	2000031721	A	1/2000
KR	200235289		10/2001
WO	9842150	A2	9/1998
WO	9952311	A1	10/1999
WO	0101582	A2	1/2001
WO	02073739	A1	9/2002
WO	03003511	A1	1/2003
WO	03023895	A2	3/2003
WO	03043128	A1	5/2003
WO	2005010652	A2	2/2005
WO	2005039225	A1	4/2005

OTHER PUBLICATIONS

Xiaodong et al., "Handover Mechanism in Coordinated Multi-Point Transmission/Reception System," ZTE Corporate, ZTE Communications, 2010, No. 1.

Catreux et al., "Simulation Results for an interference-limited multiple-input multiple-output cellular system," IEEE Communications Letter, vol. 4, No. 11, pp. 334-336, Nov. 2000.

Dai et al., "Downlink capacity of interference-limited MIMO systems with joint detection," IEEE Transactions Wireless Communications, vol. 3, No. 2, pp. 442-453, Mar. 2004.

Goldsmith et al. , "Capacity limits of MIMO Channels," IEEE J Select, Areas Coomun., vol. 21, No. 5, pp. 684-702, Jun. 2003.

Jafar et al., "PhantomNet: Exploring Optimal Multicellular Multiple antenna systems," Proc. 2002 Fall IEEE Vehicular.

Spencer et al., "Capacity and downlink transmission algorithms for a multi-user MIMO Channel," Conference record of the Thirty-Second Asilomar Conference on Signals, systems, and Computers, vol. 2, pp. 1384-1388, Nov. 2002.

Wyner, "Shannon-theoretic approach to a Gaussian Cellular Multiple-access channel," IEEE Trans, on Inform. Theory, vol. 40, No. 6, pp. 1713-1727, Nov. 1994.

Shamai et al., "Enhancing the cellular downlink capacity via co-processing at the transmission end," Proc. 2001 Spring IEEE Vehicular Technology Conf., pp. 1745-1749, Rhodes, Greece, May 2001.

Baier et al, "Joint transmission (JT), an alternative rationale for the downlink of Time Division CDMA using multi-element transmit antennas," pp. 1-5.

Meuer et al, "Joint transmission; advantageous downlink concept for CDMA mobile radio systems using time division duplexing", pp. 900-901, May 2000.

Meuer et al, "Synthesis of joint detection and joint transmission in CDMA downlinks", Electronics Letters, Jul. 5, 2001, vol. 37, No. 14.

Troger et al., "Performance Assessment of Joint Transmission (JT) Multi-User Downlinks and Multi-Element Transmit Antennas", Smart Antennas, vol. 12, No. 5, Sep.-Oct. 2001, pp. 407-416.

Costa, "Writing on Dirty Paper," IEEE Transactions on Information Theory, vol. 29 No. 3, pp. 439-441, May 1983.

Jafar et al., "Transmitter Optimization for miltiple antenna cellular systems," Proc, 2002 IEEE International Syposium on Information Theory, pp. 50, Jun. 30-Jul. 5, 2002.

Molisch, "MIMO systems with antenna selection—an overview," Proc. Radio and Wireless Conference, 2003, RAWCON 03, pp. 167-170 Aug. 2003.

U.S. Appl. No. 14/952,839, filed Nov. 25, 2015.

U.S. Appl. No. 14/952,850, filed Nov. 25, 2015.

U.S. Appl. No. 14/952,867, filed Nov. 25, 2015.

Notice of Allowance from U.S. Appl. No. 12/020,932, dated May 16, 2008.

Notice of Allowance from U.S. Appl. No. 12/021,278, dated Sep. 11, 2009.

Notice of Allowance from U.S. Appl. No. 12/134,122, dated Oct. 22, 2010.

Non-Final Office Action from U.S. Appl. No. 12/134,122, dated May 24, 2010.

Notice of Allowance from U.S. Appl. No. 12/134,959, dated Aug. 10, 2010.

Non-Final Office Action from U.S. Appl. No. 12/134,959, dated Feb. 24, 2010.

Notice of Allowance from U.S. Appl. No. 13/118,386, dated Nov. 9, 2012.

Non-Final Office Action from U.S. Appl. No. 13/118,386, dated May 3, 2012.

Notice of Allowance from U.S. Appl. No. 13/192,181, dated Sep. 25, 2012.

(56) **References Cited**

OTHER PUBLICATIONS

Non-Final Office Action from U.S. Appl. No. 13/192,181, dated Jun. 1, 2012.
Non-Final Office Action from U.S. Appl. No. 13/192,181, dated Feb. 22, 2012.
Notice of Allowance from U.S. Appl. No. 13/211,529, dated Dec. 9, 2011.
Notice of Allowance from U.S. Appl. No. 13/218,185, dated Jun. 12, 2012.
Non-Final Office Action from U.S. Appl. No. 13/218,185, dated Mar. 28, 2012.
Notice of Allowance from U.S. Appl. No. 13/348,523, dated Jun. 26, 2014.
Non-Final Office Action from U.S. Appl. No. 13/348,523, dated Jan. 2, 2014.
Notice of Allowance from U.S. Appl. No. 13/566,986, dated Mar. 4, 2013.
Non-Final Office Action from U.S. Appl. No. 13/566,986, dated Nov. 1, 2012.
Kagoshima, K., "Pattern Control Antennas for Wireless Access Systems," Antennas and Propagation Society International Symposium, 2000, IEEE, Jul. 16, 2000, vol. 2, pp. 574-577.
Non-Final Office Action from U.S. Appl. No. 11/709,431, dated Sep. 22, 2009.
Johnson, R. C., "Antenna Engineering Handbook," McGraw-Hill, pp. 27-8-27-10.
Restriction Requirement from U.S. Appl. No. 11/709,431, dated Apr. 7, 2010.
Nigam, G. et al., "Coordinated Multipoint in Heterogeneous Networks: A Stochastic Geometry Approach," IEEE Globecom Workshops, Dec. 2013, pp. 1-6.
Zhang, H. et all., "Base Station Cooperation for Multiuser MIMO: Joint Transmission and BS Selection," 2004 Conference on Information Sciences and Systems, Mar. 17-19, 2004, pp. 1-6.
Notice of Allowance from U.S. Appl. No. 10/869,201, dated Sep. 27, 2007.
Non-Final Office Action from U.S. Appl. No. 10/869,201, dated Jun. 6, 2007.
Final Office Action from U.S. Appl. No. 10/869,201, dated Jan. 4, 2007.
Non-Final Office Action from U.S. Appl. No. 10/869,201, dated Sep. 7, 2006.
Advisory Action from U.S. Appl. No. 10/869,201, dated Jun. 19, 2006.
Final Office Action from U.S. Appl. No. 10/869,201, dated Apr. 17, 2006.
Non-Final Office Action from U.S. Appl. No. 10/869,201, dated Nov. 4, 2005.
Final Office Action from U.S. Appl. No. 10/869,201, dated May 20, 2005.
Restriction Requirement from U.S. Appl. No. 10/869,201, dated Jan. 13, 2005.
Notice of Allowance from U.S. Appl. No. 10/880,387, dated Nov. 1, 2007.
Non-Final Office Action from U.S. Appl. No. 10/880,387, dated Jul. 19, 2007.
Restriction Requirement from U.S. Appl. No. 10/880,387, dated Mar. 29, 2007.
Notice of Allowance from U.S. Appl. No. 11/160,549, dated Oct. 15, 2007.
Non-Final Office Action from U.S. Appl. No. 11/160,549, dated Jun. 6, 2007.
Final Office Action from U.S. Appl. No. 11/160,549, dated Jan. 4, 2007.
Non-Final Office Action from U.S. Appl. No. 11/160,549, dated Jul. 26, 2006.
Restriction Requirement from U.S. Appl. No. 11/160,549, dated Jun. 29, 2006.
Notice of Allowance from U.S. Appl. No. 11/160,550, dated Jul. 24, 2007.
Non-Final Office Action from U.S. Appl. No. 11/160,550, dated Dec. 15, 2006.
Advisory Action from U.S. Appl. No. 11/160,550, dated Sep. 21, 2006.
Final Office Action from U.S. Appl. No. 11/160,550, dated Jun. 30, 2006.
Non-Final Office Action from U.S. Appl. No. 11/160,550, dated Mar. 6, 2006.
Notice of Allowance from U.S. Appl. No. 11/160,551, dated Oct. 19, 2007.
Non-Final Office Action from U.S. Appl. No. 11/160,551, dated Jun. 6, 2007.
Final Office Action from U.S. Appl. No. 11/160,551, dated Feb. 9, 2007.
Non-Final Office Action from U.S. Appl. No. 11/160,551, dated Sep. 22, 2006.
Restriction Requirement from U.S. Appl. No. 11/160,551, dated Jun. 29, 2006.
Notice of Allowance from U.S. Appl. No. 11/160,937, dated Nov. 20, 2007.
Restriction Requirement from U.S. Appl. No. 11/160,937, dated Aug. 23, 2007.
Notice of Allowance from U.S. Appl. No. 11/275,605, dated Nov. 19, 2007.
Non-Final Office Action from U.S. Appl. No. 11/275,605, dated Oct. 2, 2007.
Notice of Allowance from U.S. Appl. No. 11/275,619, dated Nov. 24, 2008.
Non-Final Office Action from U.S. Appl. No. 11/275,619, dated Apr. 30, 2008.
Notice of Allowance from U.S. Appl. No. 11/420,605, dated Apr. 2, 2008.
Notice of Allowance from U.S. Appl. No. 11/584,730, dated Aug. 6, 2009.
Ex Parte Quayle from U.S. Appl. No. 11/584,730, dated May 28, 2015.
Notice of Allowance from U.S. Appl. No. 11/586,178, dated Jul. 17, 2009.
Non-Final Office Action from U.S. Appl. No. 11/586,178, dated Apr. 15, 2009.
Final Office Action from U.S. Appl. No. 11/586,178, dated Nov. 21, 2008.
Non-Final Office Action from U.S. Appl. No. 11/586,178, dated Jun. 9, 2008.
Notice of Allowance from U.S. Appl. No. 11/709,431, dated Jul. 18, 2011.
Notice of Allowance from U.S. Appl. No. 11/709,431, dated Jul. 23, 2010.

* cited by examiner

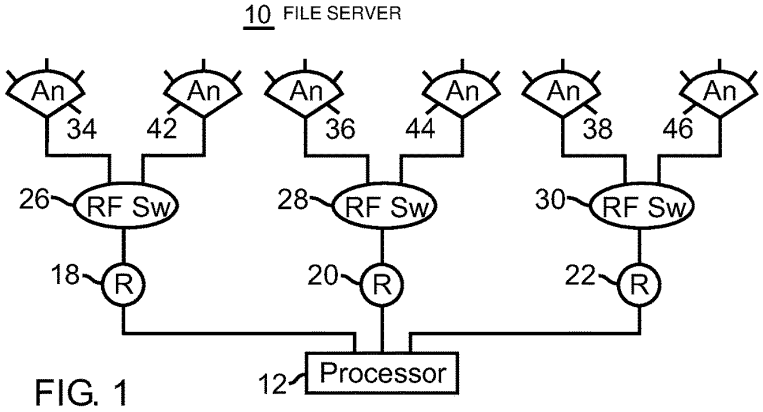

FIG. 1

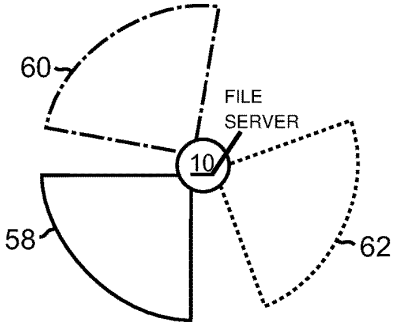

FIG. 2

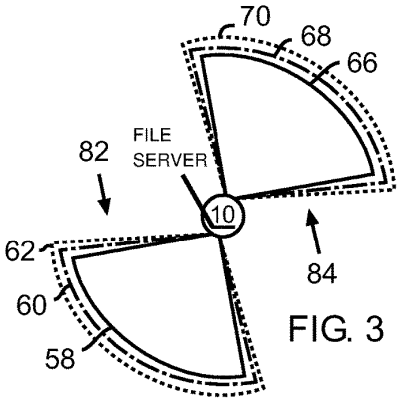

FIG. 3

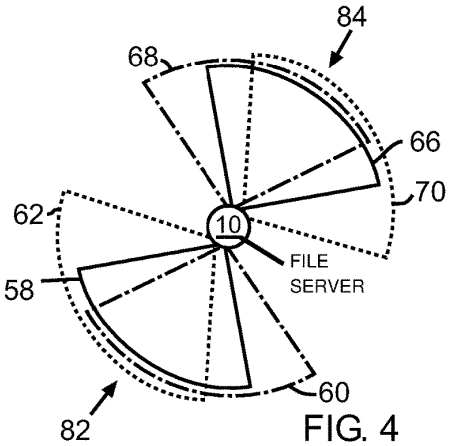

FIG. 4

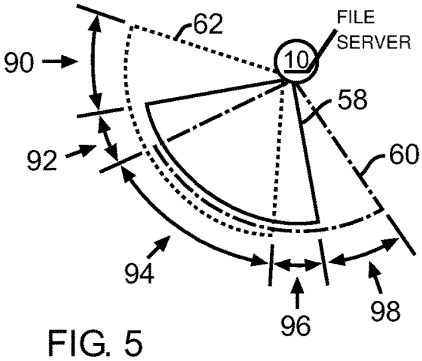

FIG. 5

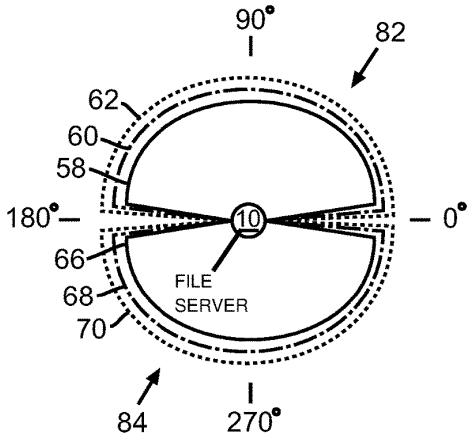

FIG. 6

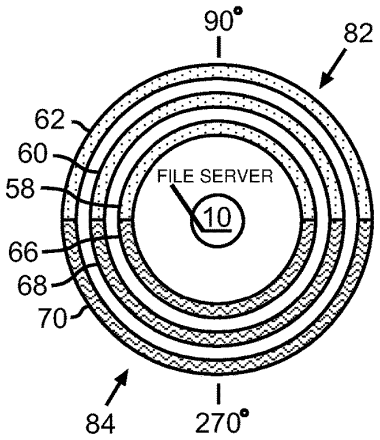

FIG. 7

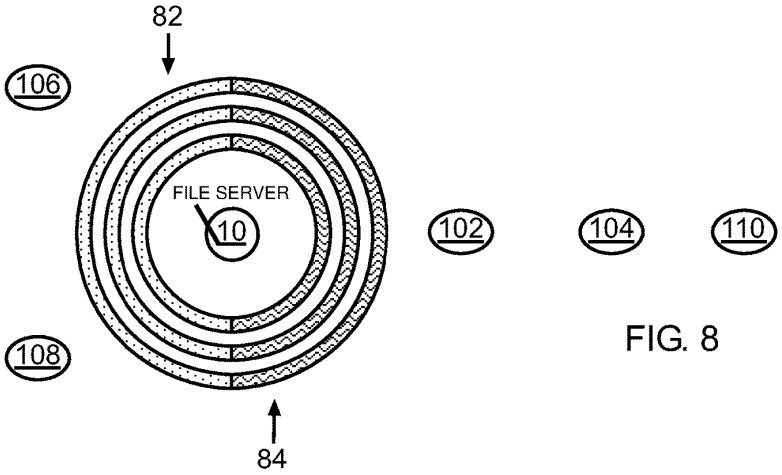

FIG. 8

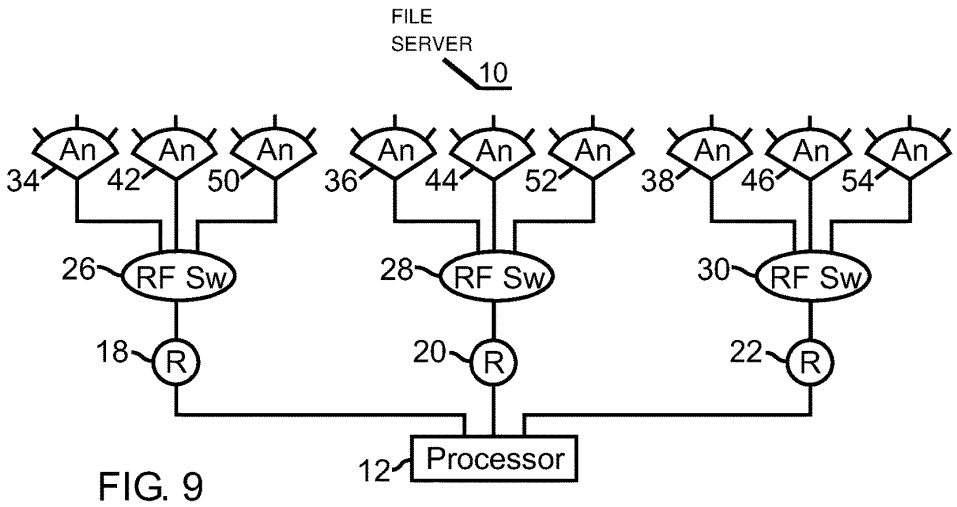
FILE
SERVER
10
An
34
42
50
36
44
52
38
46
54
26
RF Sw
28
30
18
R
20
22
12
Processor

FIG. 9

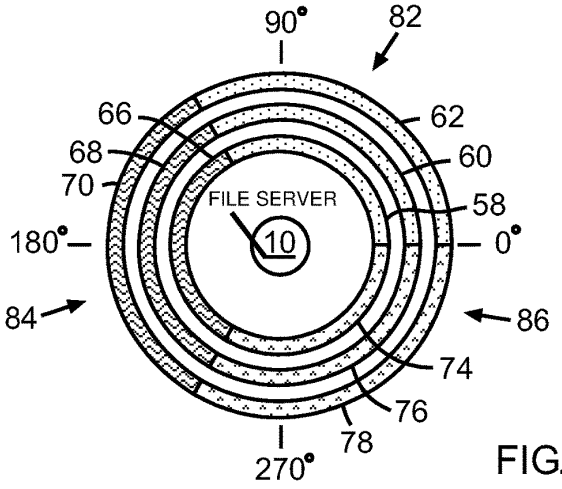
90°
82
66
62
68
60
70
58
FILE SERVER
10
180°
0°
84
86
74
76
78
270°

FIG. 10

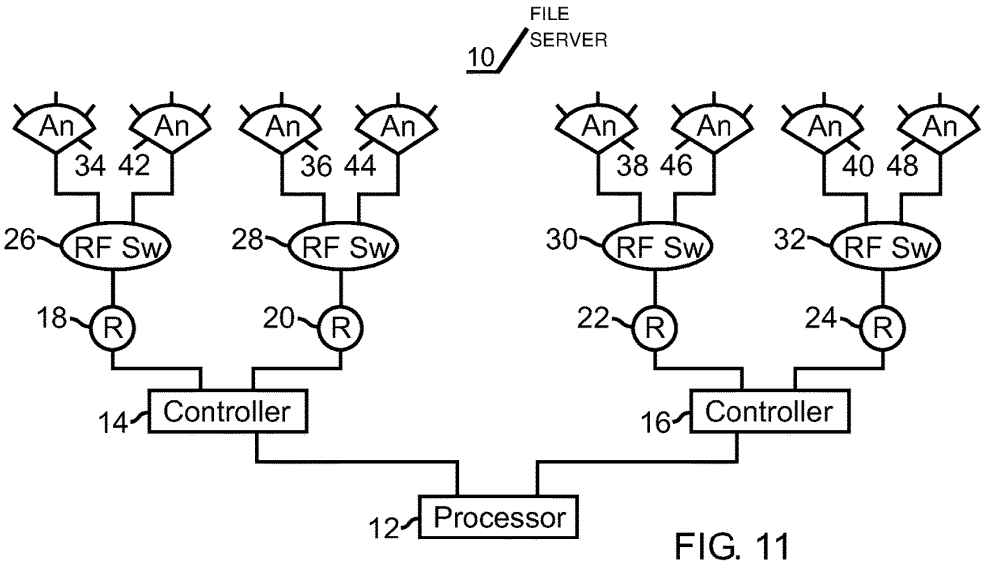
FILE SERVER
10
An
34
42
36
44
38
46
40
48
26
28
30
32
RF Sw
18
20
22
24
R
14
16
Controller
12
Processor

FIG. 11

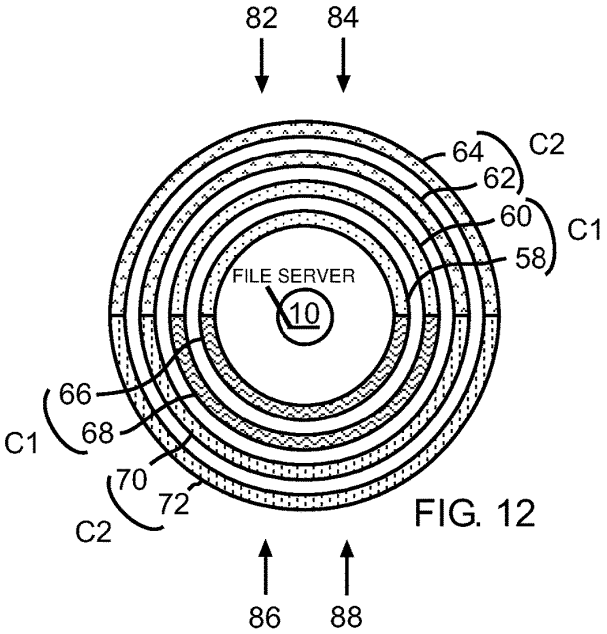
82
84
64
62
60
58
C2
C1
FILE SERVER
10
66
68
70
72
C1
C2
86
88

FIG. 12

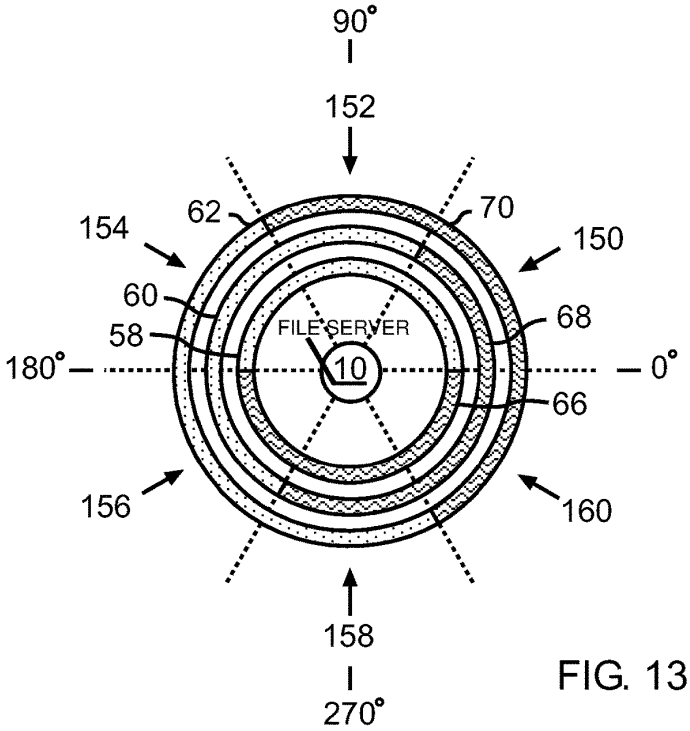
90°
152
154
62
70
150
60
68
58
FILE SERVER
180°
10
0°
66
156
160
158
270°

FIG. 13

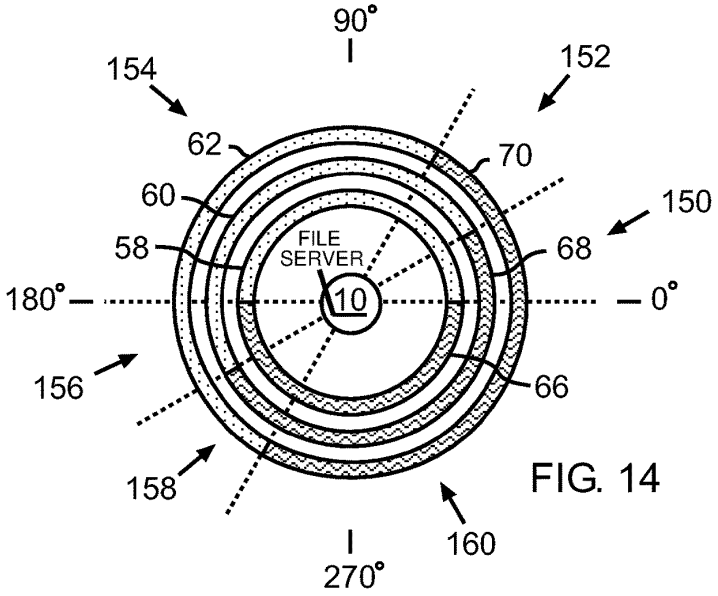
90°
154
152
62
70
60
150
58
FILE SERVER
68
180°
10
0°
156
66
158
160
270°

FIG. 14

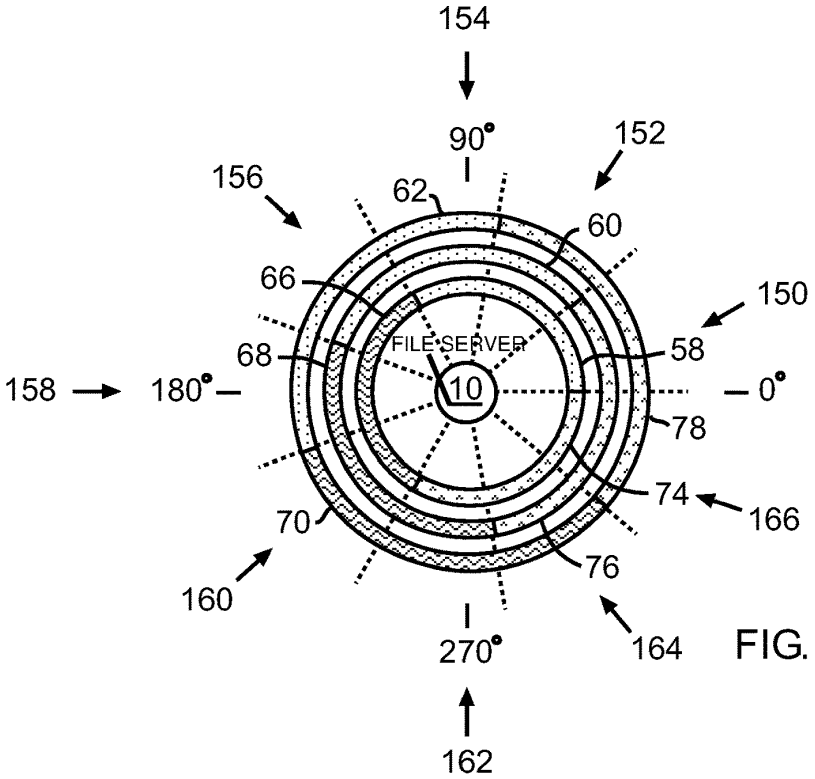
154
90°
152
156
62
60
66
150
68
FILE SERVER
58
158
180°
10
0°
78
74
166
70
76
160
270°
164
162

FIG. 15

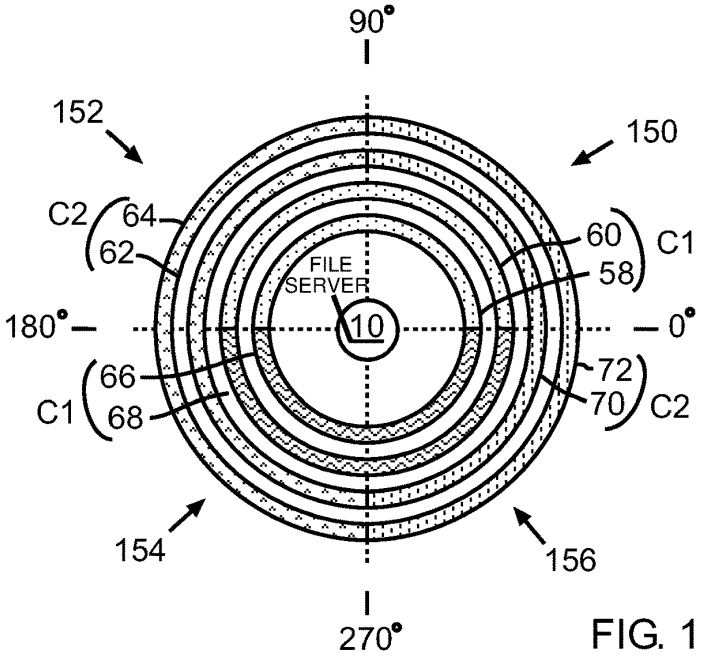
90°
152
150
C2
64
62
60
C1
58
FILE SERVER
180°
10
0°
66
72
C1
68
70
C2
154
156
270°

FIG. 16

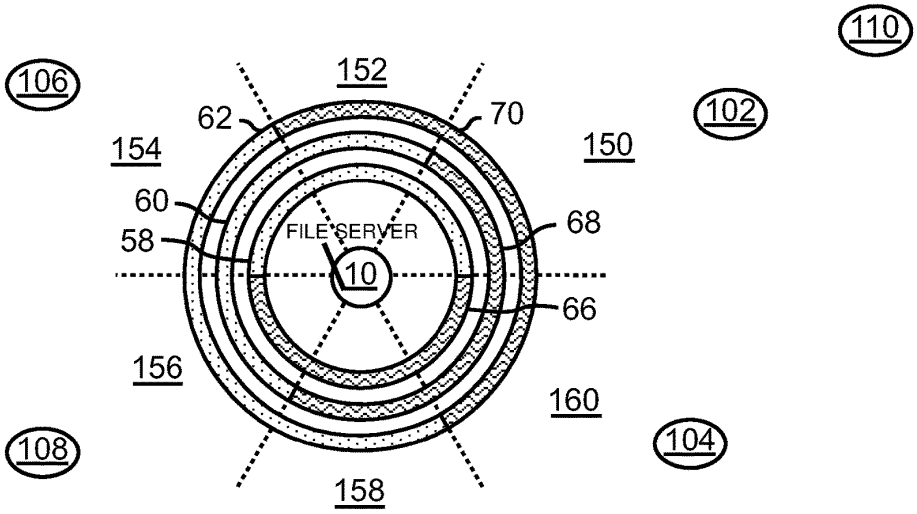
110
106
152
62
70
102
154
150
60
68
58
FILE SERVER
10
66
156
160
108
104
158

FIG. 17

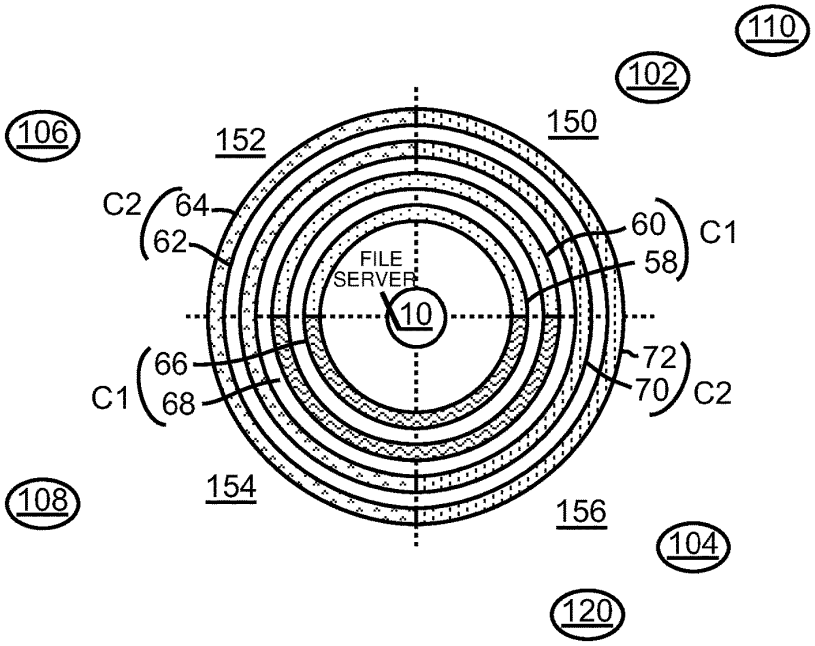
110
102
106
152
150
C2
64
62
60
C1
58
FILE SERVER
10
66
72
C1
68
70
C2
108
154
156
104
120

FIG. 18

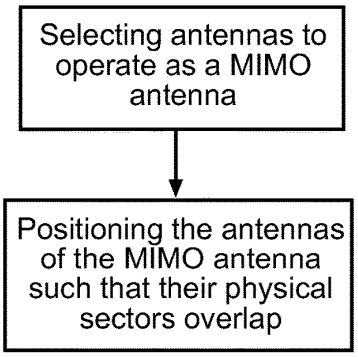
Selecting antennas to operate as a MIMO antenna
Positioning the antennas of the MIMO antenna such that their physical sectors overlap

FIG. 19

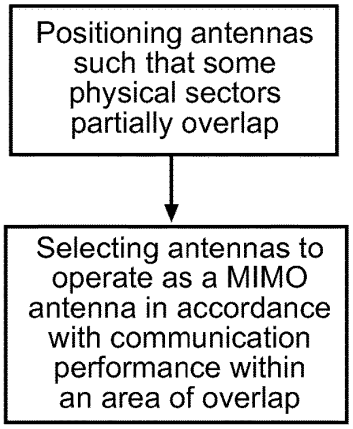
Positioning antennas such that some physical sectors partially overlap
Selecting antennas to operate as a MIMO antenna in accordance with communication performance within an area of overlap

FIG. 20

MIMO METHODS AND SYSTEMS

CROSS-REFERENCE TO RELATED APPLICATIONS

This application is a continuation of and claims priority from U.S. patent application Ser. No. 15/824,010 filed Nov. 28, 2017; which is a continuation of U.S. patent application Ser. No. 15/406,661 filed Jan. 13, 2017, now U.S. Pat. No. 9,859,963; which is a continuation of U.S. patent application Ser. No. 14/952,874 filed Nov. 25, 2015, now U.S. Pat. No. 9,584,197; which is a continuation of U.S. patent application Ser. No. 14/476,628 filed Sep. 3, 2014, now U.S. Pat. No. 9,503,163; which is a continuation of U.S. patent application Ser. No. 13/348,523 filed Jan. 11, 2012, now U.S. Pat. No. 8,855,089; which is a continuation of U.S. patent application Ser. No. 13/118,386 filed May 28, 2011, now U.S. Pat. No. 8,345,651; which is a continuation of U.S. patent application Ser. No. 11/709,431 filed Feb. 21, 2007, now U.S. Pat. No. 8,009,646; which claims priority under 35 U.S.C. sctn.119 (e) from U.S. Provisional Patent Application Ser. No. 60/743,376 filed Feb. 28, 2006, each of the aforementioned applications is herein incorporated by reference.

FIELD OF THE INVENTION

Embodiments of the present invention relate to wireless communication using Multiple Input Multiple Output ("MIMO") antennas and methods of operation.

BACKGROUND OF THE INVENTION

Wireless devices find uses in a variety of applications for example, providing communication between computers, wireless cells, clients, hand-held devices, mobile devices, and file servers. Wireless devices with Multiple Input Multiple Output ("MIMO") antennas benefit from spatial diversity and redundant signals. Noise sources may interfere with wireless devices that use MIMO antennas. Wireless communication using devices having MIMO antennas may substantially benefit from selecting a MIMO physical sector and/or a MIMO virtual sector to improve performance.

SUMMARY OF THE INVENTION

A system, method, and computer program product is provided to select at least one channel based on one or more channel characteristics and initiate a first transmission to a first multiple-input-multiple-output (MIMO)-capable portable wireless device, and further initiate a second transmission to a second multiple-input-multiple-output (MIMO)-capable portable wireless device, such that at least a portion of the first transmission occurs simultaneously with at least a portion of the second transmission and both occur via a first wireless protocol; and is further configured to initiate a third transmission to a third multiple-input-multiple-output (MIMO)-capable portable wireless device via a second wireless protocol including a 802.11n protocol, where the first wireless protocol includes another 802.11 protocol other than the 802.11n protocol.

BRIEF DESCRIPTION OF THE DRAWING

Embodiments of the present invention will now be further described with reference to the drawing, wherein like designations denote like elements, and:

FIG. **1** is a diagram of an exemplary wireless device according to the various aspects of the present invention;

FIG. **2** is a diagram of exemplary physical sectors;

FIG. **3** is a diagram of exemplary physical sectors that form exemplary MIMO physical sectors;

FIG. **4** is a diagram of exemplary MIMO virtual sectors;

FIG. **5** is a diagram of an exemplary MIMO virtual sector;

FIG. **6** is a diagram of exemplary MIMO virtual sectors;

FIG. **7** is a diagram of exemplary alternate method for diagrammatically indicating physical sectors, MIMO physical sectors, and MIMO virtual sectors;

FIG. **8** is a diagram of communication between exemplary wireless devices in the presence of noise sources;

FIG. **9** is a diagram of an exemplary wireless device having three radios and three antennas for each radio;

FIG. **10** is a diagram of exemplary physical sectors that form exemplary MIMO physical sectors;

FIG. **11** is a diagram of an exemplary wireless device having two radio groups, each group having two radios and two antennas for each radio;

FIG. **12** is a diagram of exemplary physical sectors that substantially overlap to form exemplary MIMO physical sectors;

FIG. **13** is a diagram of exemplary physical sectors that partial overlap to form exemplary MIMO virtual sectors;

FIG. **14** is a diagram of exemplary physical sectors that partial overlap to form exemplary MIMO virtual sectors;

FIG. **15** is a diagram of exemplary physical sectors that partial overlap to form exemplary MIMO virtual sectors;

FIG. **16** is a diagram of exemplary physical sectors that substantially overlap to form exemplary MIMO physical sectors and exemplary MIMO physical sectors that partially overlap to form exemplary MIMO physical sectors;

FIG. **17** is a diagram of communication between exemplary wireless devices in the presence of noise sources;

FIG. **18** is a diagram of communication between exemplary wireless devices in the presence of exemplary noise sources;

FIG. **19** is a diagram of a method for forming MIMO physical sectors; and

FIG. **20** is a diagram of a method for forming MIMO physical sectors.

DETAILED DESCRIPTION OF THE PREFERRED EMBODIMENTS

Wireless devices use antennas to transmit and receive radio signals. Noise sources, such as other wireless devices including wireless devices that transmit on the same channel, may interfere with wireless communication. Conventional wireless devices use a variety of techniques to reduce the detrimental effect of noise on communication for example, dividing the area of coverage into sectors, using directional antenna, and using multiple antennas to provide redundancy and spatial diversity.

An improved wireless device, according to the various aspects of the present invention includes directional antennas positioned in such a way that the physical sectors of the antennas of the wireless device overlap and the antennas selected for communication are the antennas whose physical sectors overlap in an area in a manner that permits the antennas to operate as a Multiple Input Multiple Output ("MIMO") antenna.

The wireless device, according to the various aspects of the present invention may select for communication any suitable combination of directional antennas that operate as a MIMO antenna and are oriented in a desired direction of

communication. Furthermore, the wireless device may assign any available channel to the antennas to improve performance.

A wireless device, according to the various aspects of the present invention includes, for example, wireless cells, access points, wireless clients, mobile computers, and hand-held devices.

The term "physical sector" is understood to mean the area of coverage in which an antenna transmits and receives signals. The size and shape of a physical sector depends on a variety of factors for example, the type of antenna, atmospheric conditions, presence of noise sources, and physical surroundings. Physical sectors **58**, **60** and **62** represent the two-dimensional shape of idealized physical sectors of directional antennas. Physical sectors **58**, **60** and **62** do not overlap in FIG. **2**. Physical sectors **58**, **60** and **62** substantially overlap in FIG. **3**. Physical sectors **58**, **60** and **62** partially overlap in FIGS. **4** and **5**.

The term "MIMO antenna" is understood to mean at least two antennas that each transmits and/or receives signals on the same channel in the area where the physical sectors of the antennas overlap. Antennas may be positioned in such a way that their physical sectors overlap. Antennas whose physical sectors overlap in the same area may be configured to operate as a MIMO antenna in that area. Each individual antenna of a MIMO antenna operates on the same channel (e.g., frequency, encoding, or other method of dividing the radio spectrum for communication). A MIMO antenna provides, inter alia, spatial diversity between the antennas, redundancy, and temporal diversity to reduce the effects of noise on transmission and reception. Reducing the effects of noise permits a wireless device to communicate more reliability.

Antennas that form a MIMO antenna may be oriented to use different signal polarization for example, horizontal, vertical, and circular. Antennas that form a MIMO antenna may be physically separated to provide spatial diversity.

MIMO physical sectors are formed to provide communication with increased immunity to noise within the area of the MIMO physical sector. The term "MIMO physical sector" means the area where the physical sectors of the antennas that operate as a MIMO antenna overlap.

In an exemplary embodiment, referring to FIG. **3**, physical sectors **58**, **60**, and **62** substantially overlap to form MIMO physical sector **82**. Physical sectors **66**, **68**, and **70** substantially overlap to form a MIMO physical sector **84**. In this embodiment, each MIMO physical sector has an angle of coverage of about 90 degrees. In another embodiment, referring to FIG. **6**, each one physical sector **58**, **60**, and **62** and each one physical sector **66**, **68**, and **70** has an angle of coverage of about 180 degrees, thus the resulting MIMO physical sectors **82** and **84** have an angle of coverage of about 180 degrees. FIG. **7** represents an alternate method for diagrammatically representing physical sectors and MIMO physical sectors. Physical sectors **58-62** respectively have about a 180 degree angle of coverage and the center of each physical sector is oriented at approximately 90 degrees (straight up on the page). Each physical sector **58-62** extends from wireless device **10** to the furthest extent reached by the respective antennas even though FIG. **7** shows gaps between the physical sectors for clarity. The MIMO physical sectors **82** and **84** of FIGS. **6** and **7** are equivalent; however, the diagrammatical representation of FIG. **7** provides greater clarity. Thus, MIMO physical sectors **82** and **84** respectively include three substantially overlapping physical sectors **58-62** and **66-70**.

The physical sectors of the antennas that form a MIMO antenna are not limited to being substantially overlapping. When physical sectors only partially overlap, the MIMO physical sector is the area where the physical sectors of the antennas that form the MIMO antenna overlap. Referring to FIGS. **4** and **5**, the antennas associated with physical sectors **58-62** transmit and receive using the same channel. Area **94** is the area where physical sectors **58**, **60**, and **62** overlap, thus area **94** is a MIMO physical sector. The antennas associated with physical sectors **58-62** operate as a MIMO antenna in area **94**. The MIMO physical sector formed by physical sectors **66-70** is also shown in FIG. **4** as MIMO physical sector **82**.

MIMO physical sectors may be formed in a variety of ways. In one exemplary method for forming a MIMO physical sector, referring to FIG. **19**, antennas are selected to operate as a MIMO antenna then the antennas are positioned in such a way that the physical sectors of the antennas overlap. In another exemplary method for forming a MIMO physical sector, referring to FIG. **20**, a plurality of antennas are positioned in such a way that the physical sectors of at least some of the antennas at least partially overlap then at least two antennas are selected to operate as a MIMO antenna in the area where their physical sectors overlap to form a MIMO physical sector. The plurality of antennas may be positioned in such a way that the various MIMO physical sectors that are formed are oriented in different directions. At least two antennas may be selected to operate as a MIMO antenna in accordance with the orientation of the MIMO physical sector formed by the physical sectors of the selected antennas. The orientation of some MIMO physical sectors may provide increased performance over the orientation of other MIMO physical sectors. Furthermore, the antennas that form the MIMO antenna may be assigned any available channel. Accordingly, the selected antennas, thus the MIMO physical sector, may be assigned to a channel that provides improved performance.

The term "MIMO virtual sector" means the area where the physical sectors of antennas that may operate as a MIMO antenna overlap. Referring to FIG. **13**, physical sectors **58-62** and **66-70** each have an angle of coverage of about 180 degrees respectively. The antennas associated with physical sectors **58-62** and **66-70** are positioned in such a way that in area **150**, physical sectors **58**, **68**, and **70** overlap. In area **152**, physical sectors **58**, **60**, and **70** overlap and so forth for areas **154-160**. Each one area **150-160** comprises a MIMO virtual sector because the antennas whose physical sectors overlap in the area may operate as a MIMO antenna. If the antennas associated with physical sectors **58**, **68**, and **70** are selected to form a MIMO antenna, then area **150** operates as a MIMO physical sector. If the antennas associated with physical sectors **58**, **60**, and **70** are selected to form a MIMO antenna, then area **152** operates as a MIMO physical sector and so forth for the other areas. Before antennas are selected to form a MIMO physical sector, areas **150-160** are MIMO virtual sectors. When antennas are selected to form a MIMO antenna, the area where the physical sectors of the selected antennas overlap become a MIMO physical sector while the other areas remain MIMO virtual sectors. A MIMO physical sector may also be referred to as a selected MIMO virtual sector or an active MIMO virtual sector. Any criteria may be used to select a MIMO virtual sector for communication.

The method of positioning antennas to form MIMO virtual sectors then selecting antennas to operate as a MIMO antenna permits the wireless device to respond to changes in, inter alia, performance, noise sources, and the environment

by communicating through the MIMO physical sector that provides increased performance.

Positioning antennas to form MIMO virtual sectors permits a wireless device with fixed antenna positions to select from a variety of MIMO virtual sectors to communicate using the MIMO physical sector that provides a desired level of performance. When the performance of the selected MIMO physical sector deteriorates due to, inter alia, noise sources or environmental conditions, the wireless device can select different antennas to operate as a MIMO antenna, thereby selecting a different MIMO virtual sector to operate as a MIMO physical sector where the different MIMO physical sector provides increased performance.

MIMO physical sectors permits a wireless device to communicate with increased performance. MIMO virtual sectors permits a wireless device to select an area to transmit and receive in accordance with the MIMO virtual sector that provides a desired level of performance. A wireless device having multiple MIMO virtual sectors may select between the various MIMO virtual sectors. A wireless device may select the MIMO virtual sector that provides an increased level of performance. Positioning the antennas of a wireless device to form MIMO virtual sectors that are oriented in different directions permits the wireless device to select a MIMO physical sector based on the orientation of the virtual sector with relation to the position of noise sources.

Performance may be measure by, inter alia, throughput, data throughput, signal-to-noise ratio, reduced signal error, reduced data errors, reduced retransmission requests, reduced interference, rejection of multipath signals, higher transmission rates, and signal strength.

A MIMO system includes radios and antennas that may be configured to form MIMO antennas, MIMO physical sectors, and MIMO virtual sectors. A MIMO system may form a MIMO antenna using any suitable combination of radios and antennas. A MIMO system may select any suitable MIMO physical sector for communication. A MIMO system may have any suitable number of MIMO virtual sectors and/or selected MIMO virtual sectors. The MIMO system may position its MIMO physical sectors at any orientation. The MIMO physical sectors of a MIMO system may overlap other MIMO physical sectors of the same MIMO system. Overlapping MIMO physical sectors of the same MIMO system may be assigned different channels.

A MIMO system has at least two radios and at least two antennas where at least two radios and two antennas form a MIMO antenna. In another exemplary embodiment, referring to FIG. **1**, a MIMO system has three radios with two antennas interfacing with each one radio. Three antennas, one antenna from each radio, may operate as a MIMO antenna, thereby resulting in a MIMO system having two MIMO antennas.

The present invention may employ various types of radios using any type of communication protocol and operating at any frequency and/or with any number of channels suitable for the application. The present invention may use any variety of antennas or groups of antennas for any purpose for example, transmission, reception, noise reduction, and multipath detection. Antennas may be positioned in any manner for example, their physical sectors may be overlapping and non-overlapping. Radios and antennas may operate as a MIMO system, MIMO antennas, MIMO physical sectors, and MIMO virtual sectors. Any type of algorithm and/or processor may be used to enable radios and/or antennas to form and operate as MIMO antennas. Antennas may be selected for communication according to any criteria such as for example, data throughput, signal strength, signal quality, and signal-to-noise ratio.

In one embodiment, the antennas of the wireless device are positioned to form non-overlapping MIMO physical sectors and one of the non-overlapping MIMO physical sectors is selected for communication with other wireless devices. In another embodiment, the antennas of the wireless device are positioned to form overlapping MIMO virtual sectors and some of the MIMO virtual sectors are selected for communication with other wireless devices.

The antennas that form a MIMO antenna may be used in any manner to transmit and/or receive signals for example, any number of antennas that operate as the MIMO antenna may transmit only, receive only, and transmit and receive signals.

In an exemplary embodiment, referring to FIG. **1**, antennas **34**, **36**, and **38**, with their associated radios, form a MIMO antenna in which each antenna **34**, **36**, and **38** transmits and receives the same signals. In another embodiment, antennas **34-38** form a MIMO antenna in which antenna **34** transmits, antenna **36** receives only, and antenna **38** transmits and receives. Different MIMO antenna configurations may provide different communication characteristics. For example, a configuration where all antennas of the MIMO antenna transmit and receive the same information may provide increased error correction. A configuration where antennas transmit and/or receive different information may provide increased data throughput. In an configuration where each antenna of the MIMO antenna receives some version of the same signal, the information content of the various signal versions received by the antennas of the MIMO antenna may be highly similar and/or less similar depending on environmental conditions for example, the presence of noise sources, multipath reflections, and spatial diversity of the antennas. Advanced algorithms may be used to process the signal received by each antenna that form the MIMO antenna to construct a resultant receive signal that contains as much of the receive signal information as can be extracted. The antennas of a MIMO antenna may be configured to receive signals from a common source by positioning the antennas such that their physical sectors overlap.

The number of antennas used to form a MIMO physical sector and the overlap of the physical sectors of the antennas may affect performance. For example, referring to FIGS. **1** and **5**, area **90** receives coverage from only physical sector **62**, thus communications within area **90** are transmitted and received by only antenna **38**. Likewise, area **98** receives coverage only from physical sector **60** and antenna **36**. Even when antennas **36** and **38** are selected to operate as a MIMO antennas, areas **90** and **98** are not MIMO physical sectors because only one antenna operates in the area. When only one antenna of the antennas selected to operate as a MIMO antenna transmits and receives in an area, the performance may not be as high as in the areas where the physical sectors of the antennas overlap to form a MIMO physical sector. Areas **92** and **96** receive coverage from physical sectors **58**, **62** and **58**, **60** respectively. Areas **92** and **96** are MIMO physical sectors because at least two antennas operate as a MIMO antenna in the areas. Communication using at least two antennas of the antennas selected to operate as a MIMO antenna may improve performance. Area **94**, a MIMO physical sector formed by the overlap of the physical sectors of three antennas, receives coverage from physical sectors **58**, **60** and **62** and their related antennas **34-38**. Antennas **34-38** operate as a MIMO antenna, thus reception and/or transmission through all three antennas in area **94** may

provide higher performance than reception and/or transmission through areas **90-92** and **96-98**. The MIMO physical sector in area **94** is most likely to provide improved performance because all antennas of the MIMO antenna communicate in area **94**.

MIMO physical sectors formed using directional antennas may use conventional antenna select methods to reduce interference from noise sources. For example, referring to FIGS. **1** and **8**, wireless device **10** comprises processor **12**, radios **18-22**, RF switches **26-30**, and antennas **34-38** and **42-46** where two antennas interfacing with each one RF switch respectively. Antennas **34-38** and **42-46** operate as a first MIMO antenna and a second MIMO antenna respectively. Radios **18-22** use the 802.11a/b/g/n communication protocols. Antenna physical sectors **58-62**, associated with antennas **34-38** respectively, substantially overlap to form MIMO physical sector **82**. Antenna physical sectors **66-70**, associated with antennas **42-46** respectively, substantially overlap to form MIMO physical sector **84**. In this embodiment, each radio is set to the same channel. The physical sectors and the MIMO physical sectors **82-84** extend farther than shown in FIG. **8** to enable wireless device **10** to communicate with wireless device **102** and receive interference from noise sources **106** and **108**. Wireless device **10** uses RF switches **26-30** to select between antennas **34-38** and **42-46**. In this embodiment, the RF switches select between one of two groups of antennas; either antennas **34-38** or antennas **42-46** are selected, thus only one MIMO physical sector, either **82** or **84**, is active at any given time. In the embodiment and the scenario described in FIG. **8**, wireless device **10** selects MIMO antennas physical sector **84** to reduce interference from noise sources **106** and **108** while communicating with wireless device **102**. Wireless device **104** of FIG. **8** may also be implemented using MIMO physical sectors similar to those of wireless device **10**. Wireless device **104** may select the MIMO physical sector that provides the best performance while communicating with wireless device **102** and reduces interference from noise source **110**.

In another embodiment of a MIMO system, referring to FIG. **9**, wireless device **10** comprises a processor **12**, three radios **18-22**, three RF switches **26-30**, and three antennas interfacing with each RF switch. Antennas **34-38**, **42-46**, and **50-54** may have any angle of coverage, be oriented in any direction, form MIMO antennas, and form MIMO virtual sectors in any manner. In an exemplary embodiment, referring to FIG. **10**, each antenna **34-38**, **42-46**, and **50-54** has an angle of coverage of about 120 degrees. Antennas **34-38** are oriented so that their associated physical sectors, **58-62** respectively, substantially overlap to form MIMO physical sector **82**. Antennas **42-46** are oriented so that their associated physical sectors, **66-70** respectively, substantially overlap to form MIMO physical sector **84**. Antennas **50-54** are oriented so that their associated physical sectors, **74-78** respectively, substantially overlap to form MIMO physical sector **86**. Physical sectors **58-62**, **66-70**, and **74-78** are oriented such that the center of MIMO physical sectors **82**, **84**, and **86** are respectively oriented at about 60, 180, and 300 degrees respectively. In this embodiment, the MIMO physical sectors do not substantial overlap. Each radio is set to the same channel, thus the MIMO physical sectors **82-86** each use the same channel. The wireless device embodiment of FIGS. **9** and **10** may also be used to reduce interference with noise sources by selected one of the three MIMO physical sectors for communication.

In another embodiment, not shown, wireless device **10** comprises a processor, four radios, an RF switch interfacing with each one radio, and four directional antennas interfacing with each one RF switch. Each antenna has an angle of coverage of about 90 degrees. The physical sectors of one antenna from each RF switch substantially overlap to form a MIMO physical sector resulting in a MIMO system having four MIMO virtual sectors. Each MIMO physical sector receives coverage from each one of the four radios. The physical sectors of the antennas are oriented in such a way that the MIMO physical sectors do not overlap and the MIMO physical sectors provide a combined angle of coverage of about 360 degrees. All radios are set to the same channel.

In another embodiment, not shown, wireless device **10** comprises a processor, two radios interfacing with the processor, an RF switch interfacing with each one of the radios, and three directional antennas interfacing with each one RF switch. Each antenna has an angle of coverage of about 120 degrees. The physical sectors of one antenna from each one RF switch substantially overlap to form a MIMO physical sector resulting in a MIMO system having three MIMO virtual sectors. Each MIMO physical sector receives coverage from each one of the two radios. The physical sectors of the antenna are oriented in such a way that the MIMO physical sectors do not overlap and the MIMO physical sectors provide a combined angle of coverage of about 360 degrees. All radios are set to the same channel.

In another embodiment, not shown, wireless device **10** comprises a processor, two radios interfacing with the processor, an RF switch interfacing with each one of the radios, and "N" directional antennas interfacing with each one RF switch. Each antenna has an angle of coverage of about 360 degrees divided by N. Two antennas, one from each RF switch, form a MIMO antenna, thereby forming N MIMO antennas. The physical sectors of the antennas that form each MIMO antenna substantially overlap to form N MIMO physical sectors. The MIMO physical sectors are oriented in such a way that the MIMO physical sectors do not substantially overlap, thereby providing a combined angle of coverage of about 360 degrees. All radios are set to the same channel.

Radios, antennas, and MIMO physical sectors are not limited to using a single channel for communication or to forming MIMO physical sectors that are substantially non-overlapping. Radios may be grouped to provide MIMO physical sectors that use different channels. MIMO physical sectors that communicate on different channels may be positioned to overlap. Overlapping MIMO physical sectors that use different channels may simultaneously communicate less mutual interference.

In one embodiment, referring to FIG. **11**, wireless device **10** comprises a process **12**, controllers **14**, **16** interfaces with processor **10**, two radios **18**, **20** interface with controller **14** thereby forming a first radio group, two radios **22**, **24** interface with controller **16** thereby forming a second radio group, an RF switch **26**, **28**, **30**, **32** interfaces with radio **18**, **20**, **22**, **24** respectively, antennas **34-48** interface with the RF switches in such a manner that two antennas interface with each one RF switch. The antennas may form MIMO antennas any manner; however, forming MIMO antennas using antennas from the same group enables MIMO physical sectors from different groups to operate on different channels.

In one embodiment, antennas **34** and **36** form a first MIMO antenna. Antennas **42** and **44** form a second MIMO antenna. The first and second MIMO antennas belong to the first radio group. Antennas **38** and **40** form a third MIMO antenna. Antennas **46** and **48** form a fourth MIMO antenna.

The third and fourth MIMO antennas belong to the second radio group. In another embodiment, antennas **34-40** form a first MIMO antenna and antennas **42-48** form a second MIMO antenna.

The antennas and their respective physical sectors may have any angle of coverage and be oriented in any direction. The antennas of the various groups may form MIMO antennas in any manner. The resulting MIMO physical sectors may be overlapping or non-overlapping. In an exemplary embodiment, antennas **34**, **36**, **38**, **40**, **42**, **44**, **46**, and **48** and their respective physical sectors **58**, **60**, **62**, **64**, **66**, **68**, **70**, and **72** each have an angle of coverage of about 180 degrees. Referring to FIGS. **11** and **12**, physical sector **58** substantially overlaps physical sector **60** to form MIMO physical sector **82**. Physical sectors **62** and **64** substantially overlap, **66** and **68** substantially overlap, and **70** and **72** substantially overlap to form MIMO physical sectors **84**, **86**, and **88** respectively. The center of the angles of coverage of antennas **34**, **36** and **38**, **40** are oriented at about 90 degrees (e.g., up the page), thus MIMO physical sectors **82** and **84** overlap. The center of the angles of coverage of antennas **42**, **44** and **46**, **48** are oriented at about 270 degrees (e.g., down the page), thus MIMO physical sectors **86** and **88** substantially overlap. Radios **18** and **20** belong to the first radio group and radios **22** and **24** belong to the second radio group. Assigning channel C**1** to the first radio group and channel C**2** to the second radio group results in MIMO physical sectors **82** and **86** using channel C**1** and MIMO physical sectors **84** and **88** using channel C**2**. Thus, the channel assignment, the antenna orientation, and the MIMO antenna configurations provide overlapping MIMO physical sectors that use different channels. Referring to FIG. **12**, MIMO physical sector **82** is assigned to C**1**, MIMO physical sector **84** is assigned to C**2**, and MIMO physical sector **82** substantially overlaps MIMO physical sector **84**. Because MIMO physical sectors **82** and **84** are assigned different channels, they may communicate with different wireless devices simultaneously with less mutual interference. MIMO physical sectors formed using antennas from different radio groups enables the MIMO physical sectors to overlap, be assigned different channels, and communicate simultaneously. MIMO antennas of the same radio group use the same channel. Interference between MIMO physical sectors formed using antennas from the same group may be reduced by, for example, positioning the MIMO physical sectors in such a way that they do not overlap and communicating using only one MIMO physical sector from the same group at any one time.

In another embodiment, referring to FIG. **11**, each one antenna **34-48** has a physical sector with an angle of coverage of about 90 degrees. Antennas are organized, as described above, to form four MIMO antennas. Antenna physical sectors are positioned such that the center of the angle of coverage for antennas pairs **34** and **36**, **38** and **40**, **42** and **44**, and **46** and **48** and their respective physical sectors are oriented at 45, 135, 225, and 315 degrees respectively. Channel C**1** is assigned to the first group radios and channel C**2** is assigned to the second group radios. The resulting four MIMO physical sectors are positioned to not substantially overlap and adjacent MIMO physical sectors are assigned a different channel. One MIMO physical sector from the first radio group and one MIMO physical sector from the second radio group may operate simultaneously.

The antennas of wireless device **10** may be oriented to form MIMO virtual sectors. MIMO virtual sectors may have any angle of coverage and be oriented in any manner. A MIMO virtual sector may be selected for communication to decrease interference. In one embodiment, referring to FIGS. **1** and **13**, antennas **34-38** and **42-46** have an angle of coverage of about 180 degrees. Antennas **34**, **36**, **38**, **42**, **44**, **46** and the center of the angle of coverage of their respective physical sectors **58**, **60**, **62**, **66**, **68**, **70** are oriented at 90, 150, 210, 270, 300, and 30 degrees respectively. The area between 0 and 60 degrees, marked as area **150** in FIG. **13**, is covered by physical sectors **58**, **68**, and **70**. Antennas **34**, **44**, and **46** may function together as a MIMO antenna to transmit signals to and receive signals from any wireless device within area **150**. Areas **152**, **154**, **156**, **158**, and **160** are respectively positioned between about 60-120 degrees, about 120-180 degrees, about 180-240 degrees, about 240-300 degrees, and about 300-0 degrees and are serviced respectively by antennas **34**, **36**, and **46**; **34**, **36** and **38**; **42**, **36** and **38**; **42**, **44** and **38**; and **42**, **44** and **46**. Each one area **150-160** comprises a MIMO virtual sector.

In an exemplary embodiment, referring to FIGS. **1** and **13**, area **150** operates as a MIMO physical sector by forming a MIMO antenna using antennas **34**, **44**, and **46**. Area **152** operates as a MIMO physical sector by forming a MIMO antenna using antennas **34**, **36**, and **46**, and so forth for areas **154-160**. In this embodiment, areas **158** and **160** may not be combined to operate as a MIMO physical sector because area **158** requires antennas **42**, **44**, and **38** to form a MIMO antenna while area **160** requires antennas **42**, **44**, and **46** to form a MIMO antenna. Because RF switch **30** selects only one antenna at a time, MIMO physical sectors, for this embodiment, are limited to any combination of any one antenna associated with each RF switch. In this embodiment, wireless device **10** may select and communicate through any one MIMO virtual sector at any given time. The method of selecting the MIMO virtual sector consists of setting the RF switches to select the antennas that service the desired MIMO virtual sector. In another embodiment, an RF switch with its associated antennas may be replaced by a phased array. Antenna elements of each phased array may form MIMO antennas.

Antennas may be oriented in any manner to form MIMO virtual sectors of any size. In an exemplary embodiment, referring to FIG. **13**, each MIMO virtual sector **150-160** has an angle of coverage of about 60 degrees. In another embodiment, referring to FIG. **14**, MIMO virtual sectors **150**, **152**, **154**, **156**, **158**, and **160** lie between 0-30 degrees, 30-60 degrees, 60-180 degrees, 180-210 degrees, 210-240 degrees, and 240-0 degrees respectively. In another embodiment, referring to FIG. **15**, each MIMO virtual sector has an angle of coverage of about 40 degrees. MIMO virtual sectors **150-166** lie between 0-40 degrees, 40-80 degrees, 80-120 degrees, 120-160 degrees, 160-200 degrees, 200-240 degrees, 240-280 degrees, 280-320 degrees, and 320-0 degrees respectively. In another embodiment, referring to FIGS. **11** and **18**, each MIMO virtual sector has an angle of coverage of about 90 degrees. Channel C**1** is assigned to the first group radios and channel C**2** is assigned to the second group radios.

Antenna pairs **34** and **36**, **38** and **40**, **42** and **44**, and **46** and **48** respectively form MIMO antennas. MIMO virtual sectors formed by antennas **34**, **36** and **42**, **44** extend from 0-180 and 180-0 degrees respectively and are assigned channel C**1**. MIMO virtual sectors formed by antennas **38**, **40** and **46**, **48** extend from 90-270 and 270-90 degrees respectively and are assigned channel C**2**. The MIMO virtual sectors are positioned to form areas **150-156** which each receive coverage from two MIMO virtual sectors that operate on different channels.

A wireless device may select and communicate through a MIMO virtual sector to improve performance. A wireless

device may use any criteria for selecting a MIMO virtual sector for communication such as, for example, the presence of noise sources, noise source channels used, signal-to-strength ratio, direction of primary data flow, signal quality, signal strength, and data throughput.

In one embodiment, referring to FIGS. **9** and **17**, wireless device **10** desires to communicate with wireless device **102**. Wireless device **10** successively enables each antenna combination that forms each MIMO virtual sector **150-160**. Through each MIMO virtual sector, wireless device **10** measures its ability to communicate with wireless device **102**. Through at least MIMO virtual sector **150**, wireless device **10** detects the presence of noise source **110**. Through at least MIMO virtual sectors **154** and **156**, wireless device **10** detects the presence of noise sources **106** and **108** respectively. While communicating with wireless device **102**, wireless device **10** may reduce interference from noise sources **106** and **108** by selecting and communicating through MIMO virtual sector **150**. In the embodiment of wireless device **10** shown in FIGS. **1** and **17**, areas adjacent to the selected MIMO virtual sector have at least one antenna in common, thus selecting a MIMO virtual sector does not disable all communication in other sectors, but communication within the selected MIMO virtual sector may provide increased performance than adjacent areas because it transmits and/or receives using all the antennas that form the MIMO antenna.

Referring still to FIGS. **1** and **17**, wireless device **10** may reduce interference from noise source **110** by selecting a channel that is different from the channel used by noise source **110**. In the event that wireless device **102** cannot switch to a channel that is not used by noise source **110**, communication with wireless device **102** may proceed using MIMO virtual sector **150** if it provides a desired level of performance. A wireless device may select any MIMO virtual sector that provides a desired level of performance. In this embodiment, wireless device **10** may select MIMO virtual sector **152** to communicate with wireless device **102**. Wireless device **10** may detect less interference from noise source **110** through MIMO virtual sector **152** than it detects through MIMO virtual sector **150**, but wireless device **10** may also receive a less desirable signal from wireless cell **102**. In the event that wireless device **10** desires to communicate with wireless device **104** and noise sources **106**, **108**, and **110** all operate on the same channel as wireless device **104**, wireless cell **10** may reduce interference from the noise sources by selecting MIMO virtual sector **160** for communicating with wireless device **104**. A wireless device may select and use any MIMO virtual sector for any duration of time. A wireless device may switch from using one MIMO virtual sector to using any other MIMO virtual sector at any time and for any purpose. In an exemplary embodiment, referring to FIG. **17**, wireless device **10** switches between MIMO virtual sectors **150** and **160** to communicate with wireless devices **102** and **104** respectively. Additionally, a wireless device may transmit through one MIMO virtual sector and receive through a different MIMO virtual sector. In another embodiment, referring to FIGS. **11** and **18**, wireless device **10** may select the MIMO virtual sector that provides a desired level of communication for each area. Additionally, wireless device **10** may communicate with two wireless devices **104** and **120**, both in area **156**, simultaneously on different channels; for example, wireless device **104** communicates using channel C**1** while wireless device **120** communicates using channel C**2**.

Unless contrary to physical possibility, the inventor envisions the methods and systems described herein: (i) may be performed in any sequence and/or combination; and (ii) the components of respective embodiments combined in any manner.

This application incorporates by reference U.S. provisional application Ser. No. 60/484,800 filed on Jul. 3, 2003; U.S. provisional application Ser. No. 60/493,663 filed on Aug. 8, 2003; U.S. provisional application Ser. No. 60/692,490 filed on Jun. 21, 2005; U.S. utility application Ser. No. 10/869,201 filed on Jun. 15, 2004 and issued under U.S. Pat. No. 7,302,278; and U.S. utility application Ser. No. 10/880,387 filed on Jun. 29, 2004 and issued under U.S. Pat. No. 7,359,675, in their entirety for the teachings taught therein.

The wireless cell can ask the advanced client to measure and report communication statistics such as, but not limited to, bit error rate, signal-to-noise ratio, dropped bits, signal strength, number of retransmission requests or any other environmental or communication parameter. Each antenna and antenna controller functions independently of the other antennas and controllers.

The antenna controller sets the beam width, beam azimuth, beam steering, gain of the antenna and any other parameter available on adjustable antennas. The antennas are also capable of high-speed switching. The controllable characteristics of the antenna are dynamically modifiable. The antenna beam can steer directly at one receiving client during transmission then pointed at a second client when transmission to the second client begins. The beam width of the antenna can be increased or decreased as necessary; however, it is preferable to not increase the beam width to provide antenna coverage beyond the width of a sector. If the beam width is adjusted to provide coverage wider than a sector, the radio signal may interfere with adjacent or opposing sectors or wireless cells or detect clients not associated with the sector or wireless cell. The processor is responsible for tracking the antenna characteristics best suited to service each client in the sector covered by the antenna and to set the antenna controller to the parameters best suite for the particular client when communicating with the client. The use of an adjustable antenna, an antenna controller and a processor capable of controlling the antenna controller is not limited to the six-sector embodiment of a wireless network, but can also be used in a four-sector wireless cell or other wireless cell types. Preferably, the beam width would not exceed the width of the sector of the wireless cell in which it is used.

MIMO antennas may use any combination of spatial, polarization, or angle antenna diversity. The MIMO antenna array may be fixed or adaptive for either transmit, receive, or both. When receiving, the MIMO antenna may use, for example, a maximum ratio combiner, an optimal linear combiner, selection diversity, or any combination of these methods or other methods for combining the signals from multiple antennas into a single signal. When transmitting, the MIMO antenna may use any type of encoding including, for example, OFDM, space-time-codes, or weighting of the antenna signals in the array to accomplish beam steering.

During transmission or reception, all or any subset of antennas in the MIMO array may be used or selection diversity may be used to limit the number of antennas used.

Antenna diversity may be used in the transmit path, in the receive path, or in both transmit and receive paths. The signal from each antenna, transmitted or received, may or may not be weighted.

Servicing a physical sector with a MIMO antenna means that all antennas in the MIMO array use the channel assigned to the physical sector. Signal attenuation may be added after

each antenna, after the signal combiner, or in the signal processor that manipulates the incoming signals.

Although MIMO antennas are arrays of antennas, any antenna array may be used as a single antenna or a MIMO antenna may be used. For example, a directional antenna with about 120-degree angle of coverage may be replaced by an antenna array that provides similar coverage. The array may be fixed or adaptive. Adaptive arrays may use adaptive array weights to transmit directional beams within the angle and area of coverage to send a stronger signal to a desired client. During reception, an adaptive array may use array weights to direct a beam substantially towards the transmitting client and substantially null out any sources of interference.

The processor, in exemplary embodiments, in addition to getting receive data from and sending transmit data to the radios, may also send instructions to control the radios such as, for example, instructing a radio to change channels or getting control information from the radios. In exemplary embodiments, the processor may also be capable of, for example, varying attenuation, controlling any or all RF switches, maintaining route tables, maintaining client specific information, and handing off mobile clients.

In an exemplary embodiment, the processor may also control, for example, the attenuation or RF switches on a transmit or receive basis, a per client basis, a fixed period basis, and on a per demand basis.

Some embodiments may have a network connection that may enable the wireless cell to communicate with a wired network. Some embodiments may have local storage to store, for example, transmit and receive date, relay data, video or audio data, environmental conditions data, and any other type of data required to service clients, function as a network, handoff or receive mobile clients, and forward information.

When receiving, the MIMO antenna may use, for example, a maximum ratio combiner, an optimal linear combiner, selection diversity, or any combination of these methods or other methods for combining the signals from multiple antennas into a single signal.

Assume for this example that the communication protocol uses packetized data and that the clients must transmit RTS and await a CTS before transmitting a single packet. It is possible to switch a client, or multiple clients, from a packet-based communication protocol to a data stream protocol to increase the efficiency of long data transfers between clients.

Another aspect of the invention is the use of multiple directional antennas, at least one radio, at least one attenuator and other electronic devices such as RF switches, packet switches, antenna sharing devices and other electronic and electrical components to generate various embodiments of wireless cells and wireless networks with differing characteristics and capabilities.

Although there have been described preferred embodiments of this novel invention, many variations and modifications are possible and the embodiments described herein are not limited by the specific disclosure above, but rather should be limited only by the scope of the appended claims.

The invention claimed is:

1. A computer-implemented method, comprising:

providing access to a multiple-input-multiple-output (MIMO)-capable access point including:

a plurality of antennas;

circuitry in communication with the antennas; and

at least one radio in communication with the circuitry;

selecting at least one channel based on one or more channel characteristics, for initiating a first transmission to a first portable wireless device and initiating a second transmission to a second portable wireless device, such that at least a portion of the first transmission occurs simultaneously with at least a portion of the second transmission and both occur via a first wireless protocol;

receiving first information from the first portable wireless device that is based on a first measurement performed by the first portable wireless device;

receiving second information from the second portable wireless device that is based on a second measurement performed by the second portable wireless device;

altering at least one aspect of the first transmission, based on at least one of the first information or the second information, so as to reduce interference between the first transmission and the second transmission when the at least portion of the first transmission occurs simultaneously with the at least portion of the second transmission;

altering at least one aspect of the second transmission, based on at least one of the first information or the second information, so as to reduce the interference between the first transmission and the second transmission when the at least portion of the first transmission occurs simultaneously with the at least portion of the second transmission;

transmitting first data in connection with the first transmission to the first portable wireless device;

transmitting second data in connection with the second transmission to the second portable wireless device;

receiving third information from a third portable wireless device that is based on a third measurement performed by the third portable wireless device;

altering at least one aspect of a third transmission, based on the third information, for further interference reduction; and

transmitting third data in connection with the third transmission to the third portable wireless device, via a second wireless protocol including a 802.11n protocol, where the first wireless protocol includes another 802.11 protocol other than the 802.11n protocol.

2. The computer-implemented method of claim **1**, wherein the third transmission to the third portable wireless device is initiated via a particular channel that is different, in at least one respect, from the at least one channel, for preventing interference between the third transmission via the 802.11n protocol, and at least one of the first transmission or the second transmission via the another 802.11 protocol.

3. The computer-implemented method of claim **2**, wherein a plurality of radios are utilized including a first radio configured to communicate via the another 802.11 protocol and a second radio configured to communicate via the 802.11n protocol, and different antennas are used for the another 802.11 protocol and the 802.11n protocol, so that sufficient resources are available to the 802.11n protocol and the another 802.11 protocol, when at least a portion of the third transmission occurs simultaneously with at least one of the first transmission or the second transmission.

4. The computer-implemented method of claim **3**, wherein the at least one channel includes multiple channels that, together, have a greater bandwidth than the particular channel.

5. The computer-implemented method of claim **1**, wherein the at least one channel includes multiple channels

including a first channel and a second channel, and the first transmission to the first portable wireless device is initiated via the first channel, and the second transmission to the second portable wireless device is initiated via the second channel.

6. The computer-implemented method of claim **1**, wherein the first transmission and the second transmission are both initiated on the at least one channel which includes the same single channel.

7. The computer-implemented method of claim **1**, wherein the third transmission to the third portable wireless device is initiated via a particular channel that is different from the at least one channel.

8. The computer-implemented method of claim **1**, wherein the third transmission to the third portable wireless device is initiated via a particular channel that is the same as the at least one channel.

9. The computer-implemented method of claim **1**, wherein the first transmission occurs simultaneously with the second transmission with both the first transmission and the second transmission using all of the antennas.

10. The computer-implemented method of claim **1**, wherein the first transmission occurs simultaneously with the second transmission with both the first transmission and the second transmission using different subsets of the antennas.

11. The computer-implemented method of claim **1**, wherein the multiple-input-multiple-output (MIMO)-capable access point includes a multiple-user multiple-input-multiple-output (MU-MIMO)-capable access point.

12. The computer-implemented method of claim **1**, and further comprising: utilizing a plurality of radios including a first radio configured to communicate via the another 802.11 protocol and a second radio configured to communicate via the 802.11n protocol, so that sufficient resources are available to the 802.11n protocol and the another 802.11 protocol, when at least a portion of the third transmission occurs simultaneously with at least one of the first transmission or the second transmission.

13. The computer-implemented method of claim **1**, wherein a channel difference is used for the 802.11n protocol and the another 802.11 protocol for increased data throughput.

14. The computer-implemented method of claim **1**, wherein different radios, different antennas, and a channel difference are used for the first wireless protocol and the second wireless protocol for increased data throughput.

15. A computer-implemented method, comprising:

positioning one or more multiple-input-multiple-output (MIMO)-capable access points so that the one or more multiple-input-multiple-output (MIMO)-capable access points provide a coverage dictated by a person positioning the one or more multiple-input-multiple-output (MIMO)-capable access points, each of the one or more multiple-input-multiple-output (MIMO)-capable access points including:

a plurality of antennas;

circuitry in communication with the antennas; and

at least one radio in communication with the circuitry;

selecting at least one channel based on one or more channel characteristics, for initiating a first transmission to a first portable wireless device and initiating a second transmission to a second portable wireless device, such that at least a portion of the first transmission occurs simultaneously with at least a portion of the second transmission and both occur via a first wireless protocol;

receiving first information from the first portable wireless device that is based on a first measurement performed by the first portable wireless device;

receiving second information from the second portable wireless device that is based on a second measurement performed by the second portable wireless device;

altering at least one aspect of the first transmission, based on at least one of the first information or the second information, so as to reduce interference between the first transmission and the second transmission when the at least portion of the first transmission occurs simultaneously with the at least portion of the second transmission;

altering at least one aspect of the second transmission, based on at least one of the first information or the second information, so as to reduce the interference between the first transmission and the second transmission when the at least portion of the first transmission occurs simultaneously with the at least portion of the second transmission;

transmitting first data in connection with the first transmission to the first portable wireless device;

transmitting second data in connection with the second transmission to the second portable wireless device;

receiving third information from a third portable wireless device that is based on a third measurement performed by the third portable wireless device;

altering at least one aspect of a third transmission, based on the third information, for further interference reduction; and

transmitting third data in connection with the third transmission to the third portable wireless device, via a second wireless protocol including a 802.11n protocol, where the first wireless protocol includes another 802.11 protocol other than the 802.11n protocol.

16. The computer-implemented method of claim **15**, wherein the third transmission to the third portable wireless device is initiated via a particular channel that is different, in at least one respect, from the at least one channel, for preventing interference between the third transmission via the 802.11n protocol, and at least one of the first transmission or the second transmission via the another 802.11 protocol.

17. The computer-implemented method of claim **16**, wherein a plurality of radios are utilized including a first radio configured to communicate via the another 802.11 protocol and a second radio configured to communicate via the 802.11n protocol, and different antennas are used for the another 802.11 protocol and the 802.11n protocol, so that sufficient resources are available to the 802.11n protocol and the another 802.11 protocol, when at least a portion of the third transmission occurs simultaneously with at least one of the first transmission or the second transmission.

18. The computer-implemented method of claim **15**, wherein the at least one aspect of the first transmission is altered based on at least one of the first information or the second information, so as to direct the first transmission more towards the first portable wireless device as compared to the second portable wireless device; and the at least one aspect of the second transmission is altered based on at least one of the first information or the second information, so as to direct the second transmission more towards the second portable wireless device as compared to the first portable wireless device.

19. The computer-implemented method of claim **15**, wherein the at least one channel includes multiple channels including a first channel and a second channel, and the first

transmission to the first portable wireless device is initiated via the first channel, and the second transmission to the second portable wireless device is initiated via the second channel.

20. The computer-implemented method of claim **15**, wherein the first transmission and the second transmission are both initiated on the at least one channel which includes the same single channel.

21. The computer-implemented method of claim **15**, wherein the third transmission to the third portable wireless device is initiated via a particular channel that is different from the at least one channel.

22. The computer-implemented method of claim **15**, wherein the third transmission to the third portable wireless device is initiated via a particular channel that is the same as the at least one channel.

23. The computer-implemented method of claim **15**, and further comprising: utilizing a plurality of radios including a first radio configured to communicate via the first wireless protocol and a second radio configured to communicate via the second wireless protocol.

24. The computer-implemented method of claim **15**, and further comprising: utilizing a plurality of radios including a first radio configured to communicate via the another 802.11 protocol and a second radio configured to communicate via the 802.11n protocol, so that sufficient resources are available to the 802.11n protocol and the another 802.11 protocol, when at least a portion of the third transmission occurs simultaneously with at least one of the first transmission or the second transmission.

25. The computer-implemented method of claim **15**, wherein the first portable wireless device includes a first multiple-input-multiple-output (MIMO)-capable portable wireless device, and the second portable wireless device includes a second multiple-input-multiple-output (MIMO)-capable portable wireless device.

26. The computer-implemented method of claim **15**, wherein the one or more multiple-input-multiple-output (MIMO)-capable access points include a plurality of the multiple-input-multiple-output (MIMO)-capable access points which are positioned so that the plurality of the multiple-input-multiple-output (MIMO)-capable access points collectively provide an overlap in the coverage as dictated by the person positioning of the plurality of the multiple-input-multiple-output (MIMO)-capable access points.

27. A computer-implemented method, comprising:

providing access to a multiple-input-multiple-output (MIMO)-capable access point including:

a plurality of antennas;

circuitry in communication with the antennas; and

at least one radio in communication with the circuitry;

sending a first signal to a first portable wireless device;

receiving a second signal from the first portable wireless device;

based on the second signal, permitting data communication via the multiple-input-multiple-output (MIMO)-capable access point for the first portable wireless device;

sending a third signal to a second portable wireless device;

receiving a fourth signal from the second portable wireless device;

based on the fourth signal, permitting data communication via the multiple-input-multiple-output (MIMO)-capable access point for the second portable wireless device;

selecting at least one channel based on one or more channel characteristics, for initiating a first transmission to the first portable wireless device and initiating a second transmission to the second portable wireless device, such that at least a portion of the first transmission occurs simultaneously with at least a portion of the second transmission and both occur via a first wireless protocol;

receiving first information from the first portable wireless device that is based on a first measurement performed by the first portable wireless device;

receiving second information from the second portable wireless device that is based on a second measurement performed by the second portable wireless device;

altering at least one aspect of the first transmission, based on at least one of the first information or the second information, so as to reduce interference between the first transmission and the second transmission when the at least portion of the first transmission occurs simultaneously with the at least portion of the second transmission;

altering at least one aspect of the second transmission, based on at least one of the first information or the second information, so as to reduce the interference between the first transmission and the second transmission when the at least portion of the first transmission occurs simultaneously with the at least portion of the second transmission;

transmitting first data in connection with the first transmission to the first portable wireless device;

transmitting second data in connection with the second transmission to the second portable wireless device;

receiving third information from a third portable wireless device that is based on a third measurement performed by the third portable wireless device;

altering at least one aspect of a third transmission, based on the third information; and

transmitting third data in connection with the third transmission to the third portable wireless device, via a second wireless protocol.

28. The computer-implemented method of claim **27**, wherein the first signal, the second signal, the third signal, and the fourth signal, are communicated for authentication purposes.

29. A computer-implemented method, comprising:

positioning one or more multiple-input-multiple-output (MIMO)-capable access points so that the one or more multiple-input-multiple-output (MIMO)-capable access points provide a desired coverage, each of the one or more multiple-input-multiple-output (MIMO)-capable access points including:

a plurality of antennas;

circuitry in communication with the antennas; and

at least one radio in communication with the circuitry;

causing communicative coupling between the one or more multiple-input-multiple-output (MIMO)-capable access points and a server;

receiving a first signal from a first portable wireless device;

based on the first signal, permitting data communication via the multiple-input-multiple-output (MIMO)-capable access point for the first portable wireless device;

receiving a second signal from a second portable wireless device;

based on the second signal, permitting data communication via the multiple-input-multiple-output (MIMO)-capable access point for the second portable wireless device;

selecting at least one channel based on one or more channel characteristics, for initiating a first transmission to the first portable wireless device and initiating a second transmission to the second portable wireless device, such that at least a portion of the first transmission occurs simultaneously with at least a portion of the second transmission and both occur via a first wireless protocol;

receiving first information from the first portable wireless device that is based on a first measurement performed by the first portable wireless device;

receiving second information from the second portable wireless device that is based on a second measurement performed by the second portable wireless device;

altering at least one aspect of the first transmission, based on at least one of the first information or the second information, so as to reduce interference between the first transmission and the second transmission when the at least portion of the first transmission occurs simultaneously with the at least portion of the second transmission;

altering at least one aspect of the second transmission, based on at least one of the first information or the second information, so as to reduce the interference between the first transmission and the second transmission when the at least portion of the first transmission occurs simultaneously with the at least portion of the second transmission;

transmitting first data in connection with the first transmission to the first portable wireless device;

transmitting second data in connection with the second transmission to the second portable wireless device;

receiving third information from a third portable wireless device that is based on a third measurement performed by the third portable wireless device;

altering at least one aspect of a third transmission, based on the third information, for further interference reduction; and

transmitting third data in connection with the third transmission to the third portable wireless device, via a second wireless protocol including a 802.11n protocol, where the first wireless protocol includes another 802.11 protocol other than the 802.11n protocol.

30. The computer-implemented method of claim **29**, wherein at least one of:

said circuitry includes at least one of: a switch, at least one phased array, a controller, or a processor;

said circuitry includes radio chain circuitry;

said other 802.11 protocol is a variant of the 802.11n protocol;

said other 802.11 protocol is an advancement over the 802.11n protocol;

said channel characteristics include at least one of a data throughput, a signal-to-noise ratio, a reduced signal error, a reduced data error, a reduced retransmission request, a reduced interference, a rejection of multipath signal, a higher transmission rate, or a signal strength;

a difference in channels are used for the first wireless protocol and the second wireless protocol for increased data throughput, and the difference involves data throughput;

an entirety of the first transmission occurs simultaneously with an entirety of the second transmission;

said first transmission occurs simultaneously with the second transmission with both the first transmission and the second transmission using all of the antennas;

said first transmission occurs simultaneously with the second transmission with both the first transmission and the second transmission using only a subset of the antennas;

said first transmission occurs simultaneously with the second transmission with both the first transmission and the second transmission using a same subset of the antennas;

said first transmission occurs simultaneously with the second transmission with both the first transmission and the second transmission using different subsets of the antennas;

said antennas are MIMO antennas;

said altering at least one aspect includes selecting a physical sector;

said altering at least one aspect includes selecting a virtual sector;

said altering at least one aspect includes altering beamforming;

said altering at least one aspect includes altering weighting;

said antennas are fixed in direction;

said antennas are varied in direction via beamforming;

said antennas are directional by virtue of being capable of changing direction via beamforming;

said antennas exhibit temporal diversity;

said antennas include directional antennas;

said antennas include omnidirectional antennas;

said antennas include directional antennas that are omnidirectional;

said antennas include directional antennas that have omnidirectional capabilities;

said antennas include directional antennas that are less than omnidirectional;

said at least one radio includes a single radio;

said first, second, and/or third information include a measurement of a signal-to-noise ratio;

said first data, the second data, and the third each include different data;

said antennas have associated therewith a MIMO virtual sector including an area where a MIMO physical sector is to operate;

said first portable wireless device includes a first multiple-input-multiple-output (MIMO)-capable portable wireless device;

said second portable wireless device includes a second multiple-input-multiple-output (MIMO)-capable portable wireless device;

said third portable wireless device includes a third multiple-input-multiple-output (MIMO)-capable portable wireless device;

said antennas form MIMO virtual sectors that are capable of being selected to provide MIMO physical sectors; or

said first portable wireless device includes at least one of a mobile device, a client, a computer, or a hand-held device.

* * * * *