IN THE UNITED STATES PATENT AND TRADEMARK OFFICE

BEFORE THE PATENT TRIAL AND APPEAL BOARD

ERICSSON INC.
CELLCO PARTNERSHIP D/B/A VERIZON WIRELESS
Petitioners,

v.

WOODBURY WIRELESS LLC
Patent Owner.

U.S. Patent No. 10,211,895
Title: MIMO METHODS AND SYSTEMS

Inter Partes Review No.: IPR2023-0001364

PETITION FOR *INTER PARTES* REVIEW OF U.S. PAT. NO. 10,211,895

***Mail Stop* "*PATENT BOARD*"**
Patent Trial and Appeal Board
U.S. Patent and Trademark Office
P.O. Box 1450
Alexandria, VA 22313-1450

TABLE OF CONTENTS

Page

I. **INTRODUCTION** **1**

II. OVERVIEW **1**

III. GROUNDS FOR STANDING (37 C.F.R. § 42.104(A)) **3**

IV. REASONS FOR THE REQUESTED RELIEF **3**

V. BACKGROUND **4**

- **A. Summary of the ’895 Patent** **4**
- **B. Prosecution History** **8**
- **C. Claim Construction** **9**
- **D. Priority Date of the Challenged Claims** **9**
- **E. Person of Ordinary Skill in the Art** **9**
- **F. State of the Art** **10**
  - **1. Prior Art MIMO Antenna Systems** **10**
  - **2. Selection Of MIMO Antennas Based On Environmental Measurements** **14**
  - **3. The Use Of Beamforming With MIMO Antennas** **15**
  - **4. The Use Of 802.11 Protocols** **16**

VI. IDENTIFICATION OF CHALLENGES **18**

- **A. Challenged Claims** **18**
- **B. Statutory Grounds for Challenges** **18**

VII. IDENTIFICATION OF HOW THE CHALLENGED CLAIMS ARE UNPATENTABLE 19

A. Ground 1: All Challenged Claims are unpatentable over Lastinger, alone or in view of Sadowsky 19

1. Overview of Lastinger 19

2. Overview Of Sadowsky 25

3. Detailed Application of Lastinger alone or in combination with Sadowsky 26

B. The Board Should Not Deny Institution Under 35 U.S.C. § 314(a) 74

IX. Mandatory Notices Under 37 C.F.R. §42.8 77

A. Real Party-in-Interest (37 C.F.R. § 42.8(b)(1)) 77

B. Related Matters (37 C.F.R. § 42.8(b)(2)) 77

1. Judicial Matters 77

2. Administrative Matters: 78

3. Related Patents 78

C. Lead/Back-up Counsel (37 C.F.R. § 42.8(b)(3)): 78

D. Notice of Service Information (37 C.F.R. § 42.8(b)(4)): 78

X. CONCLUSION 79

Petitioners' Exhibit List

Exhibit #	*Description*
1001	U.S. Patent No. 10,211,895 (the "'895 Patent")
1002	Select portions of prosecution history of the '895 Patent ("File History")
1003	Declaration of Petitioners' Expert Dr. Mark Mahon
1004	U.S. Patent Application Publication 2005/0003865 ("Lastinger")
1005	U.S. Pat. No. 7,907,971 ("Salo")
1006	U.S. Pat. No. 9,408,220 ("Gore")
1007	May 2005 IEEE Draft Specification
1008	January 2006 IEEE Draft Specification (MAC layer)
1009	U.S. Pat. No. 7,881,390 ("Sadowsky")
1010	U.S. Pat. No. 7,881,390 Prosecution History Excerpts including IDS from January 30, 2006.
1011	U.S. Pat. 7,596,355 ("Li")
1012	U.S. Pat. No. 8,649,322 ("Grandhi")
1013	U.S. Patent No 8,498,346 ("Biswas")
1014	WO20071088885
1015	January 2006 IEEE Draft Specification (PHY layer)
1016	Related Patents
1017	U.S. Pat. No. 9,178,577
1018	[This Exhibit Intentionally Omitted From This Petition]
1019	U.S. Pat. No. 7,590,078

I. INTRODUCTION

Pursuant to 35 U.S.C. §§ 311 *et seq*. and 37 C.F.R. §§ 42.1 *et seq*., Ericsson Inc. and Cellco Partnership d/b/a Verizon Wireless (collectively "Petitioners") hereby petitions for an *inter partes* review of U.S. Patent No. 10,211,895 (the "'895 Patent"). Petitioners respectfully submit that Claims 1-25 and 27-29 (the "Challenged Claims") of the '895 Patent are unpatentable under 35 U.S.C. §103 in view of the prior art references discussed herein.

II. OVERVIEW

The Challenged Claims are directed to an 802.11 wireless communication system with a multiple-in-multiple-out (MIMO) capable access point ("AP") that alters its transmissions based on signal measurements from a client device. However, the broad concept of a MIMO-capable AP altering transmissions based on signal measurements by a client device was already well-known, as demonstrated by the inventors' previous U.S. Patent Publication No. 2005/0003865 ("Lastinger"). For example, Figure 1 of the '895 Patent and Figure 22 of Lastinger both illustrate an exemplary embodiment of a three radio, six antenna, MIMO system which is identical in all material respects as shown below:

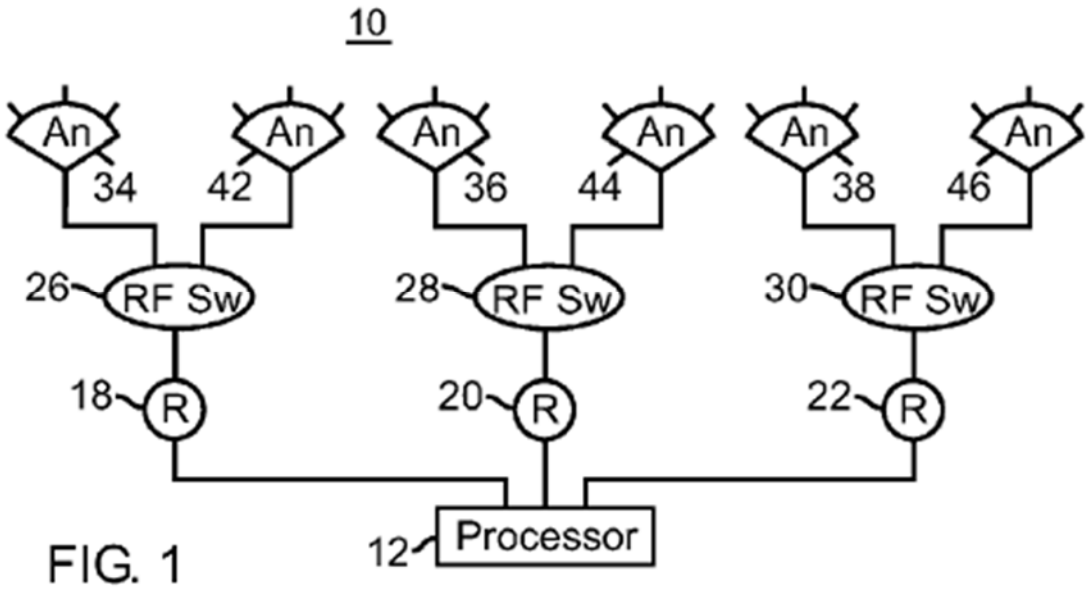

EX-1001 FIG. 1 (the '895 Patent).

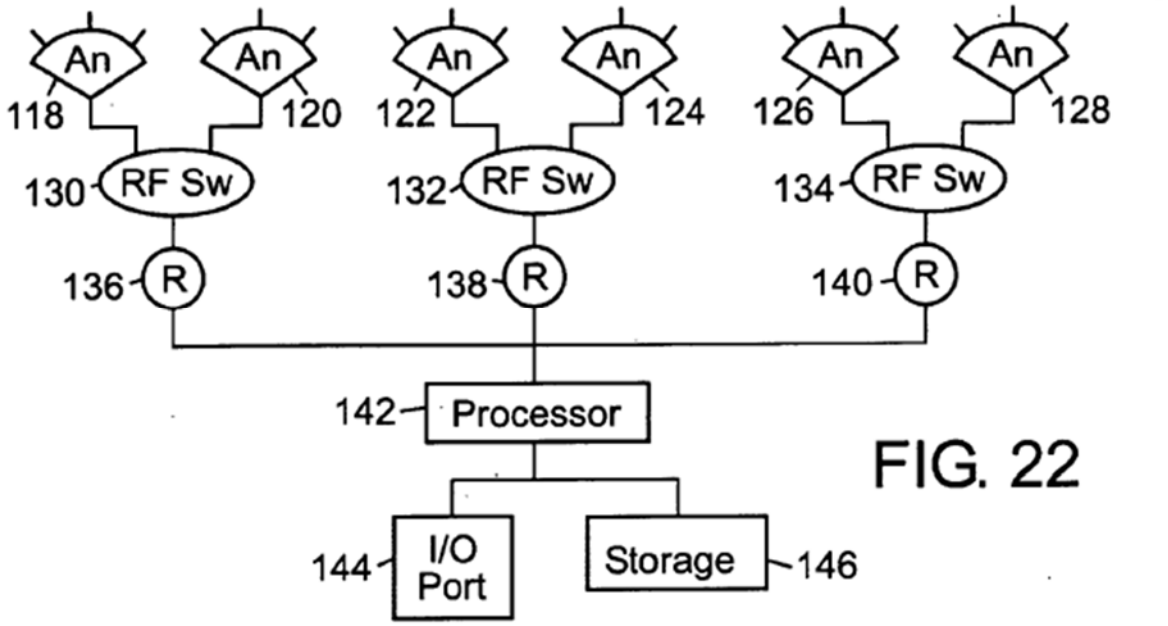

EX-1004 FIG. 22 (the Lastinger prior art).

Although the '895 Patent and Lastinger use slightly different wording, they both describe the identical architecture and methods for carrying out the identical

concepts. The Challenged Claims are directed to providing MIMO capable antennas for simultaneously transmitting to multiple portable devices simultaneously using 802.11 communication protocols. However, a POSA understood that the 802.11 protocols already allowed radios using different channels to operate simultaneously in the same physical area. Thus, the Challenged Claims merely recite the known features of MIMO capable antennas and the 802.11 protocols, as demonstrated by Lastinger.

The Challenged Claims recite the use of the 802.11n protocol, without the specification providing any description of the details of the 802.11n protocol, but the 802.11n protocol was not adopted until 3 years after the '895 priority filing. EX-1003 §181. Out of an abundance of caution, the Sadowsky reference is cited for its express disclosure of using the 802.11n protocols along with legacy 802.11a/b/g protocols in MIMO capable access points.

III. GROUNDS FOR STANDING (37 C.F.R. § 42.104(A))

Petitioners certify that the '895 Patent is available for IPR and that Petitioners are not barred or estopped from requesting an IPR of the Challenged Claims on the grounds identified herein. 37 C.F.R. § 42.104(a).

IV. REASONS FOR THE REQUESTED RELIEF

As explained in §§ II and V-VIII of this Petition and in the attached Declaration of Petitioners' Expert (EX-1003), the systems described and claimed

in the ’895 Patent were obvious over the prior art to a person of ordinary skill in the art (“POSA”) at the time of the invention.

V. BACKGROUND

A. Summary of the ’895 Patent

The ’895 Patent is directed to the same concepts that its inventors disclosed in their earlier Lastinger prior art. The ’895 Patent is directed to wireless systems with MIMO capability. It describes that one problem associated with wireless communications is that the antennas are subject to noise sources, which may interfere with wireless communications. Prior art solutions included a variety of techniques to reduce the detrimental effect of noise on wireless communications. For example, dividing the area of wireless coverage into sectors, using directional antennas, and using multiple antennas to provide redundancy and spatial diversity were well-known solutions that improved wireless communications. EX-1001 2:64-3:3.

The ’895 Patent describes that an exemplary device is shown in FIG. 1[1], and the wireless device can include a wireless cell, access point, wireless client, mobile computer and handheld devices:

[1] All color annotations of figures, and all emphasis of text herein has been added by Petitioners unless otherwise noted.

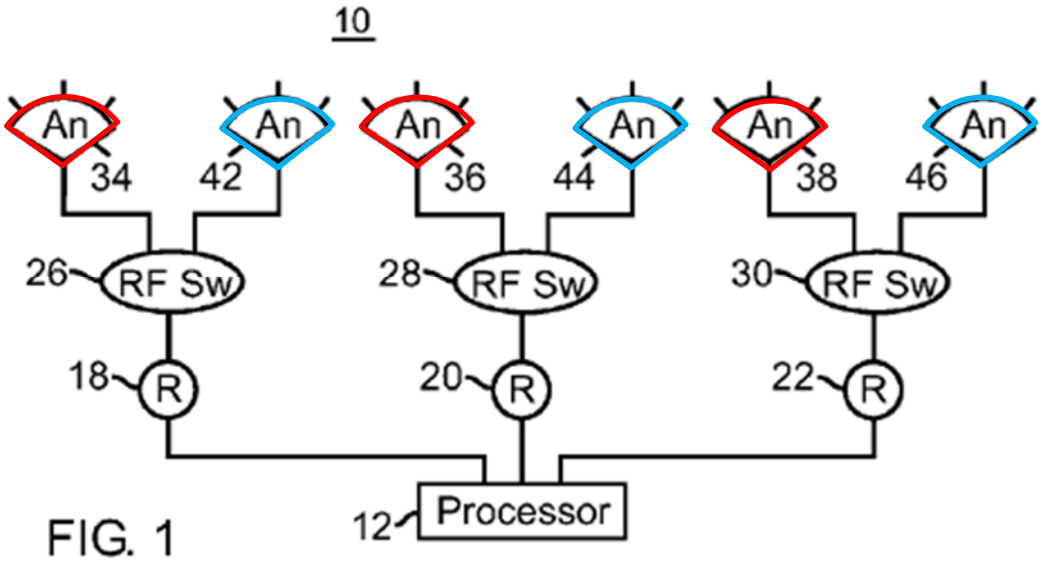

FIG. 1

EX-1001 FIG. 2, 3:4-7.

Wireless device 10 comprises processor 12, radios 18, 20 and 22, RF switches 26, 28 and 30, and antennas 34, 36, 38, 42, 44 and 46 where two antennas interfacing with each one RF switch respectively. One antenna 34, 36 and 38 for each radio 18, 20 and 22 operate as a first MIMO antenna (red) and the other antenna 42, 44 and 46 for each radio operates as a second MIMO antenna (blue). EX-1001 7:6-39.

The ’895 Patent describes that the term “MIMO antenna” is understood to mean at least two antennas that each transmits and/or receives signals on the same channel in the area where the physical sectors of the antennas overlap. Antennas whose physical sectors overlap in the same area may be configured to operate as a MIMO antenna in that area. Each individual antenna of a MIMO antenna operates on the same channel (*e.g.*, frequency, encoding, or other method of dividing the

radio spectrum for communication). A MIMO antenna provides spatial diversity between the antennas, redundancy, and temporal diversity to reduce the effects of noise on transmission and reception. Reducing the effects of noise permits a wireless device to communicate more reliability. EX-1001 3:20-34.

Accordingly, with respect to FIG. 1, antennas 34, 36, and 38, with their associated radios, form a first MIMO antenna in which each antenna 34, 36, and 38 transmits and receives the same signals. In such a configuration where each antenna of the MIMO antenna receives some version of the same signal, the information content of the various signal versions received by the antennas of the MIMO antenna may be highly similar and/or less similar depending on environmental conditions for example, the presence of noise sources, multipath reflections, and spatial diversity of the antennas. Known algorithms may be used to process the signal received by each antenna that form the MIMO antenna to construct a resultant receive signal that contains as much of the receive signal information as can be extracted. EX-1001 6:17-42.

For example, the architecture of FIG. 1 having three radios each having two antennas can produce the patterns of overlapping physical sectors as shown in FIG. 13. Each antenna has a 180º physical sector which causes overlap of three antennas (red and blue) for each virtual sector.

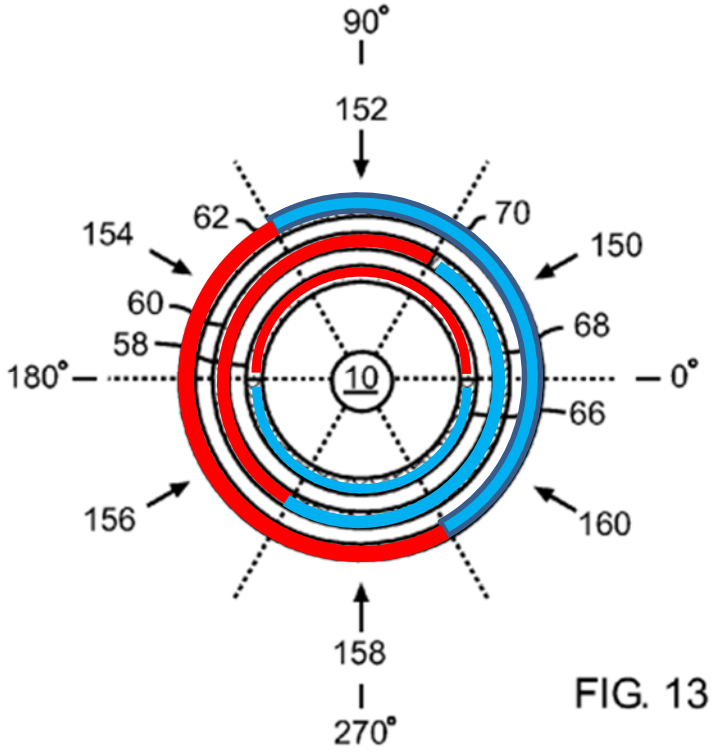

FIG. 13

The ’895 Patent describes that the wireless device may select any suitable combination of directional antennas that operate as a MIMO antenna and may assign any available channel to the antennas to improve performance. EX-1001 2:64-3:3.

The ’895 Patent describes that antennas may be selected for communication according to any criteria, such as data throughput, signal strength, signal quality, signal-to-noise ratio, reduced signal error, reduced data errors, reduced retransmission requests, reduced interference, rejection of multipath signals, and higher transmission rates. EX-1001 5:28-32; 5:67-6:3. The wireless cell can ask a

portable wireless device to measure and report such communication statistics. EX-1001 12:13-18.

The ’895 Patent includes a description of the benefits of using MIMO antennas, but these “improvements” include the identical benefits provided by known conventional MIMO systems. EX-1001 5:3-14. Likewise, the ’895 Patent includes a basic description of the operation of a conventional MIMO antenna and the benefits it provides. EX-1001 5:14-27. The ‘895 patent did not add any new MIMO techniques or technology but merely just described known MIMO operation.

The ’895 Patent did not include any details regarding the different versions of the 802.11 communication protocols and simply states “Radios 18 - 22 use the 802.11a/b/g/n communication protocols.” EX-1001 7:14-15. Thus, the ’895 Patent treated all version of 802.11 protocol as equivalent.

All of the concepts of using MIMO antennas as described and claimed in the ’895 Patent, including selecting MIMO antennas based on measurements made by a mobile device in communication with the antennas, were known to a POSA as demonstrated by Lastinger.

B. Prosecution History

The ’895 Patent issued from U.S. Pat. App. No. 16/120,258 filed September 18, 2018 claiming priority to U.S. Provisional Pat. App. No. 60/743,376, filed on

Feb. 28, 2006 through a string of continuation applications. The first Office Action rejected all pending claims for double patenting over U.S. Pat Nos. 10,068,548; 9,859,963; and 10,063,297. The applicant filed terminal disclaimers and the '895 Patent was allowed.

C. Claim Construction

Petitioners propose that each claim term be given its plain and ordinary meaning in this proceeding. The prior art relied on in this Petition meets each claim limitation under any reasonable construction.

D. Priority Date of the Challenged Claims

The '895 Patent claims priority to U.S. Provisional Pat. App. No. 60/743,376, filed on Feb. 28, 2006.

As noted below, the '895 Patent's non-Provisional application's Figures are all revised / amended with content not present in the '895 Patent's priority application (reflected by WO20071088885 at EX-1014). The new content relates to claim terms such as "server." Woodbury bears the burden of establishing priority to the Provisional application in light of these revised Figures.

The prior art below predates the earliest possible priority date of Provisional No. 60/743,376 filed on February 28, 2006.

E. Person of Ordinary Skill in the Art

With respect to the '895 Patent, a POSA in February 2006 would have been familiar with the use of and selection of MIMO antennas in wireless

communication systems. A POSA would have gained knowledge of these concepts through a mixture of training and work experience, such as by having a Bachelor's degree in electrical engineering and four years of experience; or by obtaining a Master's degree in electrical engineering in addition to having only one to two years of experience. EX-1003 ¶¶38-40.

F. State of the Art

The following section describes the state of the art relevant to the claimed invention as of February 26, 2006. The prior art references, and the discussions of what was known to a POSA, provide the factual support for the general description of the state of the art at the time of the invention, assist in understanding how a POSA understood the disclosures of the prior art, and provide the motivation to modify or combine the teachings of references.

1. Prior Art MIMO Antenna Systems

It was known to use MIMO antennas at an access point in a wireless communication system. For example, U.S. Pat. No. 7,907,971 ("Salo") (EX-1005) was filed on August 22, 2005 and teaches a wireless access point having a configurable antenna system using MIMO techniques:

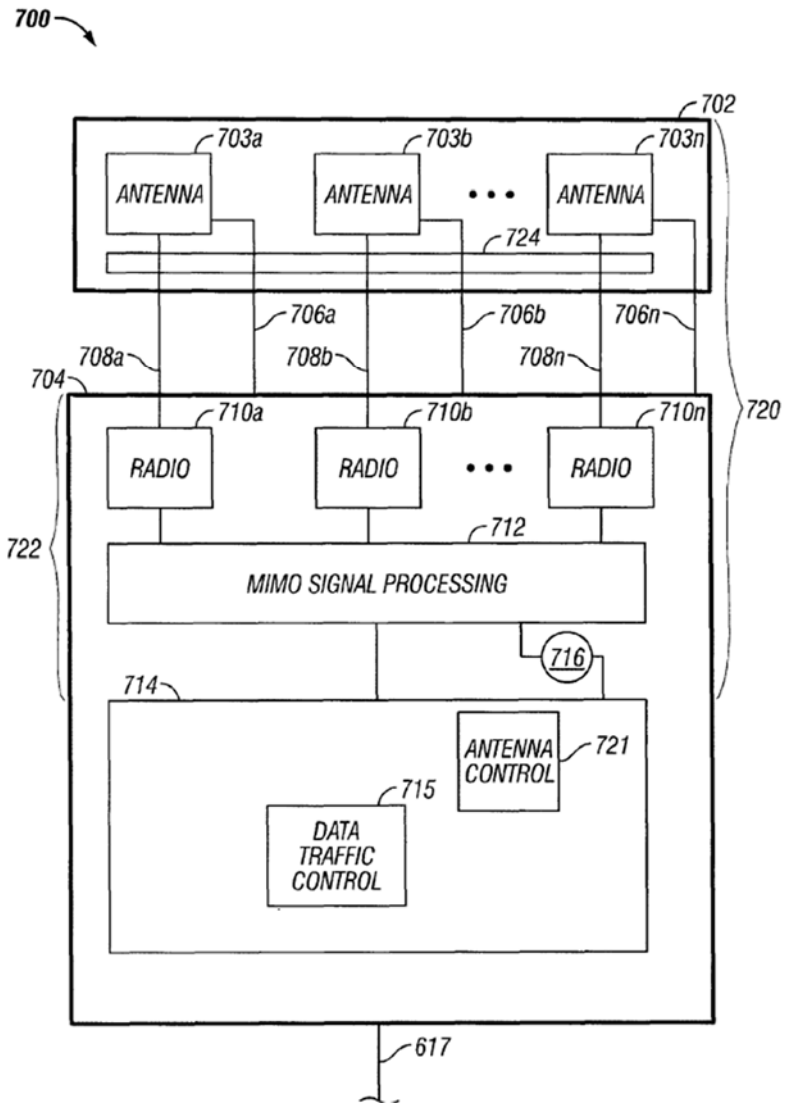

EX-1005 FIG. 7. Salo notes that "MIMO processing is well known in the art and includes the processing to send information out over two or more radio channels on two or more antennas and to receive information via multiple radio channels and antennas as well." EX-1005 14:21-27.

Salo's Figure 7 illustrates a wireless mobile access point 700 that MIMO technology. Device 700 includes a configurable antenna system 702 that includes a plurality of configurable antennas 703a-n that each includes one or more

directional antennas. The antenna system may direct or steer the gain of each configurable antennas for transmitting and receiving in more than one direction or pattern. EX-1005 13:26-50, 3:13-4:9.

Salo's antenna system can be selectively configured in response to control signals to create different antenna configurations to include different antenna patterns. EX-1005 13:51-54. The control signals are based upon signal quality metrics such as signal to noise ratio or error rates. EX-1005 5:12-6:34. Salo's radio system 704 includes a plurality of radios 710a-n and a MIMO signal processing module 712 that implements the MIMO processing. EX-1005 14:6-10, 3:62-4:9.

Similarly, U.S. Pat. No. 9,408,220 ("Gore") (EX-1006) teaches using MIMO capable antennas for beamforming:

> … the channel quality is monitored. Channel quality indicators can be used to select a scheduling technique, such as space division multiplexing (SDM), multiple-input multiple output (MIMO) transmission and opportunistic beamforming for one or more user devices. In addition, the CQI can be used to determine the appropriate beam assignment or to update the beam pattern.

EX-1006 Abstract.

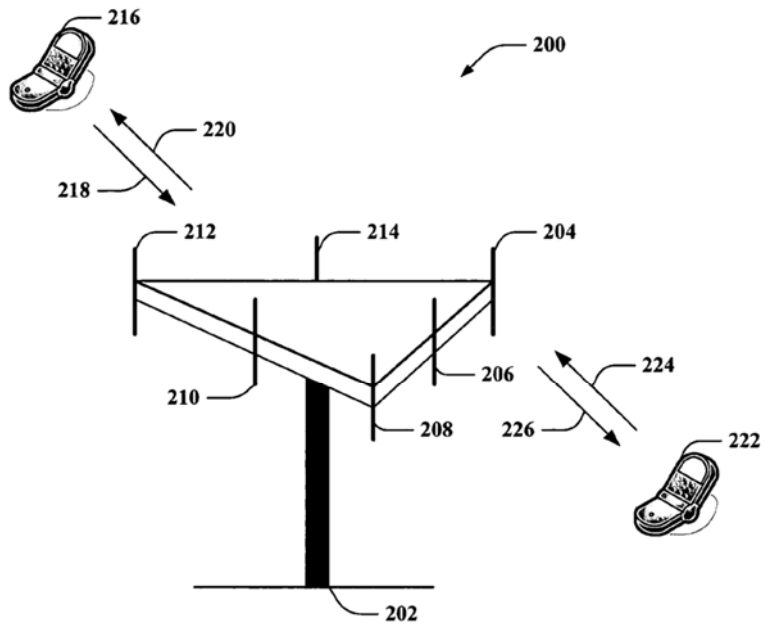

FIG. 2

EX-1006 FIG. 2. EX-1006 5:13-41. Exemplary beams are shown in FIG. 3:

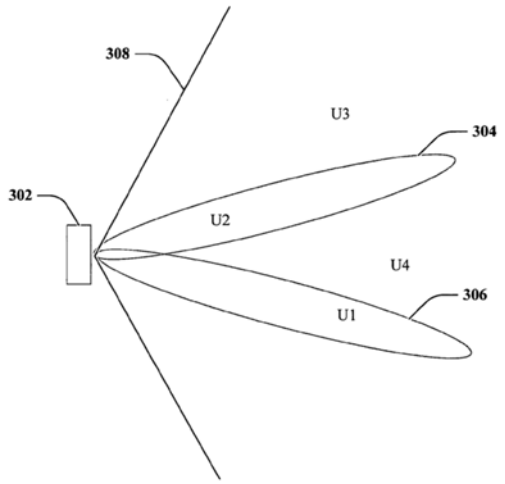

FIG. 3

EX-1006 FIG. 3;6:57-7:26. Various "channel quality indicators" ("CQI") are used to adapt the transmissions and beamforming parameters. EX-1006 8:55-9:17.

Moreover, Gore's beamforming techniques included altering beam weights and Gore's claims recite using the CQI to control MIMO beamforming techniques for transmissions to multiple devices. EX-1006 8:22-54, claims 1-36.

2. Selection Of MIMO Antennas Based On Environmental Measurements

It was well-known in the prior art that measurements of channel conditions could control the selection of MIMO antennas for transmissions to particular devices. For example, Gore extensively taught transmissions were altered based on "channel quality indicators" that included "signal to interference noise ratio" or the "supportable rate over the channel." EX-1006 7:51-60; Abstract, claims 1-36. Gore teaches "sectorization", which includes the selection of specific antennas to use for transmission and beamforming. EX-1006, 1:17-26, 5:13-6:34, 7:6-26.

As a further example, in Salo, the antenna control module 721 determines the desired configuration for each of the antenna 703a-n and generates the control signals to be sent to the antenna system 702. EX-1005 14:48-53. The antenna control module 721 is provided with a signal quality metric for each received signal and/or transmitted signal on a communication link. EX-1005 15:7:11. The signal quality metric is used to determine or select the antenna configurations. EX-1005 15:22-26. Various signal quality metrics or a combination of signal quality metrics can be used including the signal strength, the signal to noise ratio, error rates and the forward error correction value. The signal quality metric can be

measured or determined at the radio with that information being transmitted to the access point. EX-1005 5:16-24. A POSA understood that many factors can affect the signal quality metrics, including distance, reflectance, path, multi-path, interference, weather, moving objects, and fixed objects can all affect the signal quality. EX-1005 5:12-17.

The use of channel information to alter transmission characteristics was well-known to a POSA. EX1012 2:12-16 (8,649,322); EX-1019 7:35-8:16 (7,590,078); EX-1017 5:9-67 (9,178,577); EX-1003 ¶¶174-176.

3. The Use Of Beamforming With MIMO Antennas

A POSA understood that performance for a wireless communication system would be enhanced by using beamformed transmissions to communicate from the base station to the mobile devices. EX-1003 ¶¶177-179. Multiple transmit antennas located at a base station were used to create beamformed transmissions. Beamformed transmissions, also referred to as beams, typically covered a narrower area than transmissions using a single transmit antenna. A beam would be considered a virtual sector and thus would allow a virtual six-sector system to be generated from a conventional three-sector system. The signal to interference and noise ratio (SINR) was enhanced within the area covered by the beams. EX-1006 2:1-16, 5:13-6:34, 7:6-26.

A POSA understood one or more base stations provided coverage for a plurality of sectors and could use MIMO capable antennas. The base station's transmitting antennas utilized beamforming techniques to improve the signal-to-noise ratio of forward links for different mobile devices. Using beamforming to transmit to mobile devices caused less interference to mobile devices in neighboring cells/sectors than transmitting through a single antenna to all mobile devices. Generally, beams generated by multiple transmit antennas are narrower than the coverage area of a single antenna. EX-1006 5:42-63; EX

A POSA understood that channel quality indicators (CQI) were used to improve beamforming. EX-1003 ¶179. For example, CQI would be used to select a MIMO transmission and opportunistic beamforming for user devices. In addition, the CQI would be used to determine the appropriate beam assignment or to update the beam pattern. EX-1006 2:38-48. One known method included generating multiple pilot signals for different beams, transmitting the pilots and receiving at least one channel quality indicator (CQI) based at least in part upon each pilot. Thus, a POSA understood that multiple CQIs could be used to determine appropriate beam patterns and assignments. EX-1006 2:42-63.

4. The Use Of 802.11 Protocols

The '895 claims recite the "802.11n protocol" and "another 802.11 protocol." The '895 specification (as filed in 2006) contains only a single

reference to 802.11n. EX-1001 7:14-15 ("Radios 18-22 use the 802.11a/b/g/n communication protocols.").[2] The'895 Patent does not contain any other teaching regarding 802.11, and thus treats all 802.11 protocols as equivalent.

The IEEE established the 802.11n working group called "TGn" in 2003. EX-1003 ¶181. The 802.11n protocol was not adopted until 2009 – 3 years after the 2006 filing of the '895 priority application. *Id*. However, before the '895 priority date, draft IEEE 802.11n standards were publicly available from the IEEE. EX-1007 (May 2005); EX-1008 (January 2006). One of the primary improvements added in 802.11n was MIMO. EX-1007 at Sections 1, 11. *See* EX-1003 ¶181.

By May 2005, the draft IEEE 802.11n standards contained extensive specifications regarding MIMO, beamforming, and feedback regarding channel state conditions used to adjust the MIMO transmission. EX-1007 at Sections 11 ("MIMO-OFDM PHY specification); 11.2.1.2.3 ("Transmit Beamforming"); 11.2.2 ("Transmit Beamforming… One method of improving the SNR at the receiver… is to apply transmit beamforming. A basic requirement for transmit beamforming is the availability of channel state information (CSI)."); 11.1.1.6

[2] The '895 application filed in 2018 included reference to 802.11n in the newly-added Abstract and Summary of the Invention.

("Feedback Mechanisms"); 7.1.5.2 ("Closed-loop MIMO training"). EX-1003 ¶182.

Moreover, the draft 802.11n specification required support of prior "legacy" 802.11 variants (such as 802.11a/b/g). EX-1007 at Section 1 ("The TGn Sync proposal also offers seamless interoperability with 802.11 legacy devices."). Such support is described as being in "mixed mode" in which "there are co-channel legacy devices present." EX-1007, Section 3 (definitions); 6.2.2 ("Operating Mode"); 8.1.1 ("Operating Modes"); 8.1.3.2; 8.1.3.3 ("Managed Mixed Mode Operation"); 8.1.3.4. EX-1003 ¶183.

Numerous prior art patents expressly referenced the draft 802.11n standard including its teachings of MIMO, beamforming and feedback. EX-1011 1:8-24; 3:14-32; 4:8-5:5; EX-1012 3:1-31, 4:66-5:24, 6:1-7:16, 9:55-57; claims 6-12 (claiming a "MU-MIMO receiver"); Figures 1, 3; EX-1005 FIG.1, 1:20-25, 3:16-20, 4:66-5:10, 5:25-33, 2:18-27; EX-1003 ¶184.

VI. IDENTIFICATION OF CHALLENGES

A. Challenged Claims

This Petition challenges claims 1-25 and 27-29 of the '895 Patent.

B. Statutory Grounds for Challenges

The Challenges are set forth in detail below and summarized as follows:

Ground	Claims	Basis	Reference

1	1-25, 27-29	§ 103	Lastinger, alone or in view of Sadowsky

Ground 1:

U.S. Patent Application Publication No. 2005/0003865 ("Lastinger") published on January 6, 2005 from an application filed June 15, 2004. Although the '895 specification incorporates Lastinger by reference, the '895 Patent does not claim priority to it. Therefore, Lastinger qualifies as prior art under §102(b). Lastinger was provided by the applicant during the prosecution of the '895 Patent, but it was not applied or otherwise mentioned by the examiner.

U.S. Pat. No. 7,881,390 ("Sadowsky") was filed November 30, 2005. Sadowsky qualifies as prior art under §102(e). It was not cited nor applied by the examiner during prosecution of the '895 Patent.

VII. IDENTIFICATION OF HOW THE CHALLENGED CLAIMS ARE UNPATENTABLE

A. Ground 1: All Challenged Claims are unpatentable over Lastinger, alone or in view of Sadowsky

1. Overview of Lastinger

Lastinger and the '895 Patent have identical inventors. Lastinger describes the identical concepts described and claimed in the '895 Patent using slightly different terminology. Lastinger describes wireless cells as access points ("AP")

for a cellular telephone system, where the APs are equipped with multiple radios to increase the amount of throughput. Multiple directional antennas are attached to the radios through RF switches to enable the AP to service multiple clients simultaneously. The physical sectors of the antennas may overlap to form virtual sectors that provide greater flexibility in client load management and in simultaneously servicing multiple clients. EX-1004 Abstract.

This described architecture is illustrated in FIG. 22 of Lastinger:

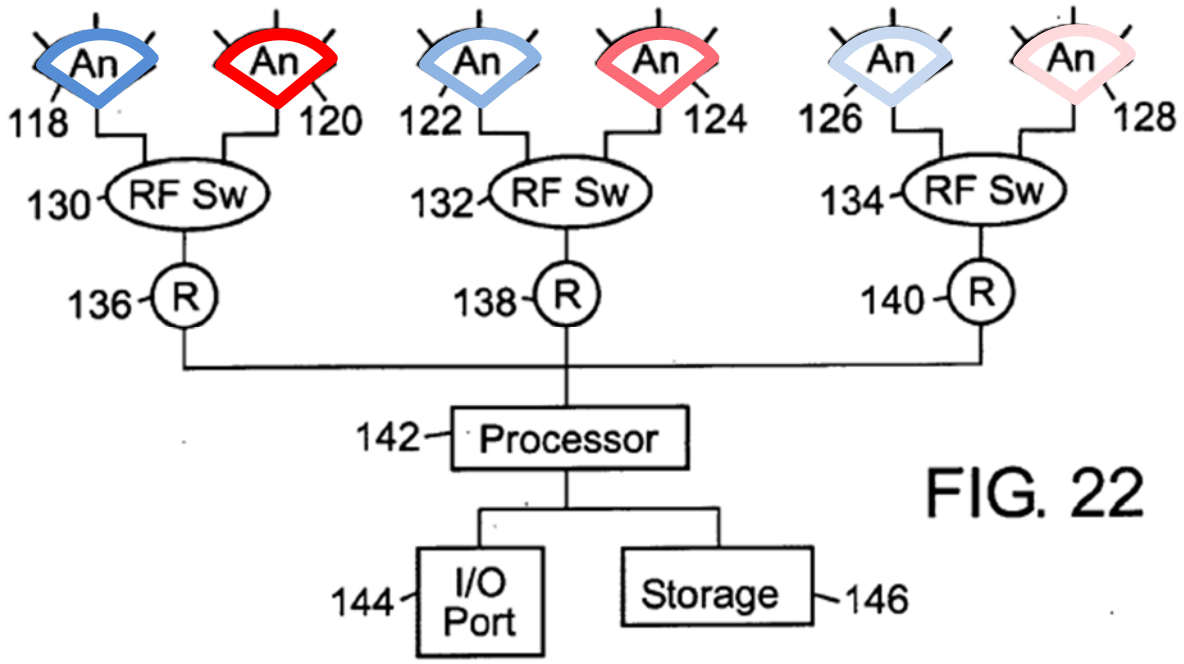

FIG. 22

Lastinger's FIG. 22 is nearly identical to FIG. 1 of the '895 Patent. Multiple antennas may be simultaneously active. Lastinger discloses exemplary patterns for overlapping physical sectors in FIGS. 4, 5, 14, 17, and 20. The coverage of two antennas in each virtual sector allow selection of the best antenna of two antennas to communicate with a device in the virtual sector. EX-1004 [0110]. For example,

using the architecture of FIG. 22 three radio each having two antennas, the patterns for overlapping physical sectors in FIG. 14 is as follows:

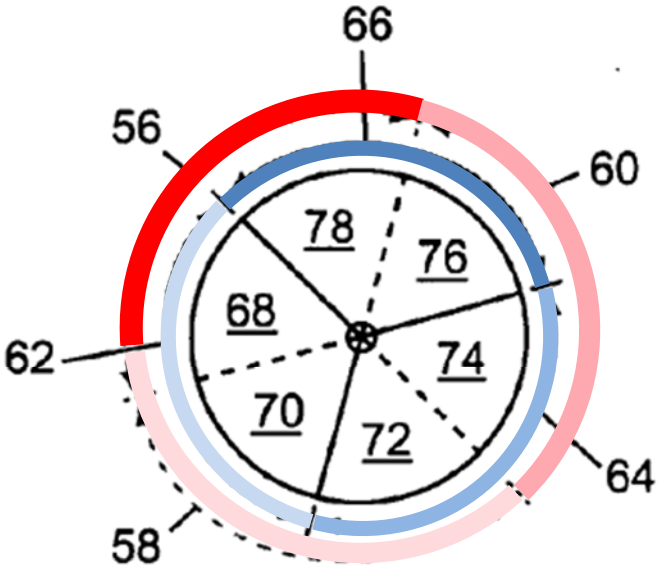

FIG. 14

The only difference between FIG. 14 of Lastinger and FIG. 13 of the '895 Patent are that each antenna has a 120º physical sector in Lastinger's FIG. 14 and a 180º physical sector in FIG. 13 of the '895, which causes overlap of two antennas for each virtual sector in FIG 14, and overlap of three antennas for each virtual sector in FIG. 13 of the '895 Patent. However, Lastinger teaches that "the number of physical sectors that overlap to form a virtual sector is not limited. Wireless cell coverage depends on the characteristics of the individual physical sectors and how they combine. There are no requirements or limitations on size or method of combination." EX-1004 [0092]. *See* EX-1003 ¶¶206-208.

Lastinger's AP communicates with one or more clients which "may be any type of wireless apparatus that communicates or cooperates with a wireless cell." EX-1004 [0097]. Like the AP, clients may have one or more radios and one or more antennas. A client can send control information to the AP, including signal quality, desired antenna, error rate, number of dropped frames, desired throughput, throughput delivered, wireless cells detected, and/or any other conceivable information. A client may also request information or action from the AP, including retransmission, channel change, throughput demands, authentication, variation in transmit power, and/or a request to modify any communication factor. EX-1004 [0098]; EX-1003 ¶209.

Lastinger's antennas used by the cell or the client may be MIMO antennas. The MIMO antenna may use any combination of spatial, polarization, or angle antenna diversity. The MIMO may use any type of encoding including, for example, OFDM, space-time-codes, or weighting of the antenna signals in the array to accomplish beam steering. During transmission or reception, all or any subset of antennas in the MIMO array may be used or selection diversity may be used to limit the number of antennas used. EX-1004 [0103-0105], claim 5. Adaptive arrays may use adaptive array weights to transmit directional beams within the angle and area of coverage to send a stronger signal to a desired client. During reception, an adaptive array may use array weights to direct a beam

substantially towards the transmitting client and substantially null out any sources of interference. EX-1004 [0105]; EX-1003 ¶¶210-219.

Lastinger's selection of antenna and transmission characteristics can be based on information provided by a client. For example, a client may send information that helps the AP manage its communication with the clients it serves, including desired throughput, buffer fullness, signal quality, and/or other relevant information. EX-1004 [0100]; EX-1003 ¶220.

Although FIG. 2 shows two antennas per virtual sector, Lastinger makes clear that there is essentially no limitation on the number of antennas per virtual sector. EX-1004 [0110].

Lastinger further discloses that typically a client requests to associate with an AP, and if the AP grants the association, a relationship is established and communication may occur. A client may not only associate with the AP, but also with a specific physical sector of the AP. The client detects radio signals from physical sectors and makes a request to associate with one of the physical sectors generally based on the quality of the signal the client receives from each sector which it reports to the AP. The AP tracks the clients serviced by each physical sector. EX-1004 [0170].

Lastinger's signal quality is a term used to describe radio signals wherein higher quality signals typically more accurately transmit and receive information,

and provide higher data transfer rates (i.e., throughput). In contrast, lower quality signals potentially suffer losses in transmission and reception; thereby resulting in low throughput. Signal quality is a measure of, for example, signal level, noise level, error rate, and other operational and environmental factors from a radio's perspective. EX-1004 [0167].

Lastinger discloses that a radio at the AP or the client may measure signal quality by listening to receive signals and ranking them by their signal quality. Radios may be capable of using more than one channel scan and ranking all signals received on all channels. EX-1004 [0168]. An AP may dynamically balance its load by disassociating a particular client with a particular physical sector and establishing an association with a different sector, or the AP may use control commands to move an advanced client to a different physical sector and different channel without requiring the client to repeat the association process. A client may disassociate with its current physical sector and request association with another physical sector of the same AP. EX-1004 [0175]; EX-1003 ¶¶221-224.

Lastinger discloses that the MIMO capable antennas and radios could utilize the 802.11 protocols to provide minimally interfering channels that allow radios using different channels to operate simultaneously in the same physical area, but broadly described that the AP embodiments may use any set of protocols to communicate with other wireless cells, clients, or other wireless devices. Lastinger

explains that radios did not interfere with each other even though the physical sectors were adjacent or overlapping, if the radios attached to the antennas of adjacent or overlapping physical sectors used different minimally interfering channels. The assignment of channels to overlapping and adjacent physical sectors played an important role in enabling multiple radios to operate simultaneously in the same or nearby physical space. EX-1004 [0087], [0134]; EX-1003 ¶¶211-219, ¶¶104-12.

Lastinger's enhanced antenna system is not limited to using one radio, or to only one antenna, at a time. EX-1004 [0145]-[0146]. Thus, a POSA understood that Lastinger's MIMO techniques include antennas from multiple radios serving the same physical sector as part of MIMO processing. EX-1003 ¶¶211-219, ¶¶104-12.

2. Overview Of Sadowsky

Sadowsky teaches techniques for the simultaneous use of "existing Wi-Fi" systems (such as 802.11a/b/g systems) with the "next-generation Wi-Fi" identified as the "proposal IEEE P802.11n, May 2005" which is found in EX-1007. EX-1003 ¶¶226-230. EX-1009 1:17-60, 2:33-52. Sadowsky's "architecture of system 100 may be identical or similar to that described in IEEE P802.11n, section 11 'MIMO-OFDM HT PHY Specification.'" EX-1009 3:31-33. Sadowsky repeatedly expressly references the May 2005 802.11n draft standard. EX-1009 Abstract,

1:27-29; 2:40-53; 5:1-3; 5:30-31. Indeed, Sadowsky submitted the May 2005 draft standard to the PTO on January 30, 2006. EX-1010; *see also* EX-1009, Other Publications.

Sadowsky references the draft 802.11n standard as the "HT" or "High Throughput" version of Wi-Fi (corresponding to Sadowsky's citation to a specific 802.11n section of "IEEE P802.11n, section 11 'MIMO-OFDM **HT** PHY Specification.'" EX-1009, 3:31-33, 5:20-36; EX-1003 ¶228.

Sadowsky teaches simultaneous transmissions to 802.11n devices and other 802.11 legacy variants. EX-1009 1:30-59; 2:33-3:25; claims 1-20 (frame includes "legacy portions" and "high throughput portions"). Sadowsky teaches the 802.11n use of MIMO using any form of antenna including arrays. EX-1009 4:9-47. EX-1003 ¶¶229.

Sadowsky contains extensive teachings on allowing different channels for different 802.11 transmissions including "lower bandwidth channel and a lower throughput (e.g., 802.11a/g systems)" as opposed to higher throughput systems using the draft 802.11n proposal. EX-1009 5:3-36; EX-1003 ¶230.

3. Detailed Application of Lastinger alone or in combination with Sadowsky

a. **Claim 1**

[1.0] A computer-implemented method, comprising: providing access to a multiple-input-multiple-output (MIMO) capable access point including:

Lastinger discloses[3] and claims a computer implemented method comprising a MIMO capable access point. EX-1004; FIG. 2, Claims 1-72. Lastinger's functionality can be implemented in any different forms and permutations of hardware and software. EX-1004, [0080], [0152].

[1.1] a plurality of antennas; circuitry in communication with the antennas; and at least one radio in communication with the circuitry;

Lastinger discloses a MIMO capable access point (blue) including a plurality of antennas (green), circuity in communication with the antennas (purple) and at least one radio (red) in communication with the circuitry, as illustrated in annotated FIG. 22:

[3] As used throughout this Petition, "discloses" encompasses what a reference would teach or suggest to a POSA.

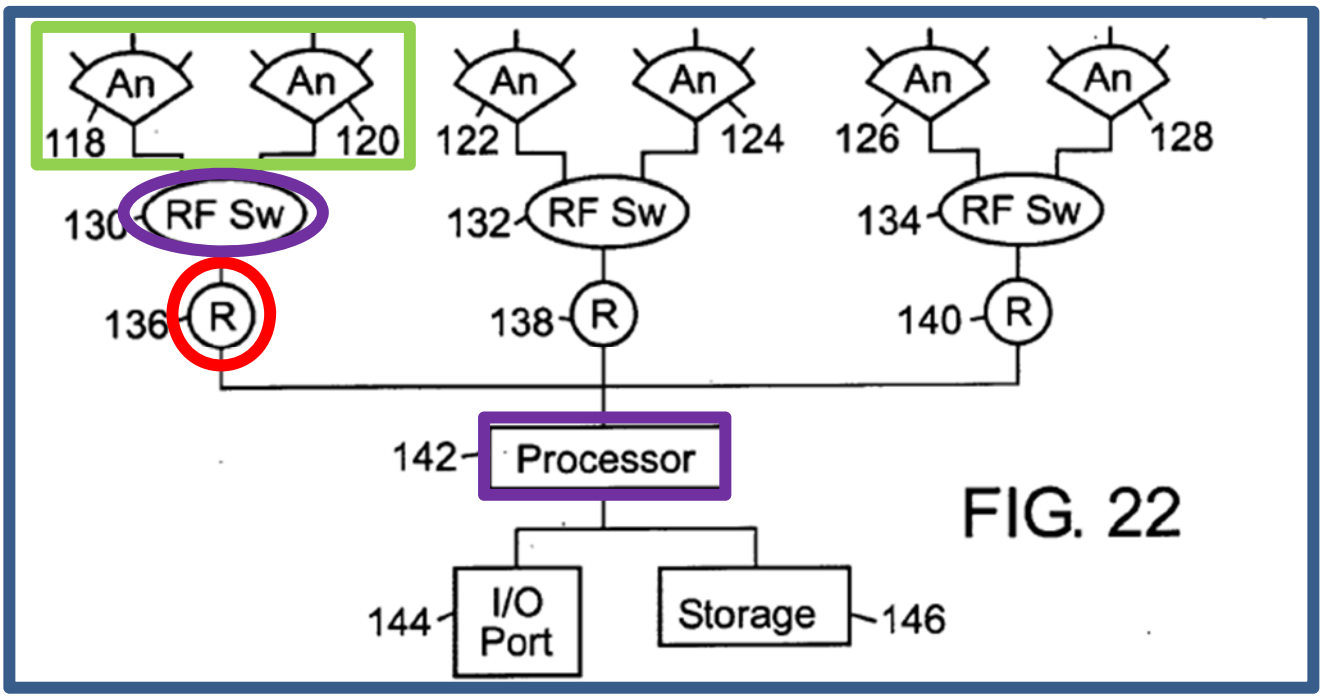

EX-1004 FIG. 22.

Lastinger discloses that FIG. 22 is an exemplary six antenna, three-radio wireless cell (EX-1004, 0030):

> Radios are an additional, indispensable part of a wireless cell. Other components of a wireless cell may include, for example, at least one of RF switches, ASDS, processors, I/O ports, storage, attenuators in addition to those used in the enhanced antenna system, packet switches, horns, base band processors, digital signal processors, and other analog or digital electronic components, or connections, and busses. No limitation is placed on the number of radios, antennas, other components, or the organization of the components in a wireless cell.

EX-1004 [0130]. *See also* EX-1004, FIGS. 22-31 (showing various component configurations).

"One embodiment of a wireless cell is an access point" ("AP"). EX-1004, [0090], Abstract. Lastinger's AP may use any protocol to provide access to communicate with other wireless cells, clients, or other wireless devices, including 802.11a, 802.11b, 802.11g, 802.15, 802.16, Bluetooth, and ultra-wideband. EX-1004 [0134]. Thus, a POSA understood that Lastinger's wireless cell was a *MIMO capable access point* that included:

- *a plurality of antennas* having *MIMO capability* (green) EX-1004 [0102]-[0105]; Claim 5.
- *circuity in communication with the antennas* (purple) EX-1004 [0110]-[0111], [0135].
- *at least one radio in communication with the circuitry* (red), EX-1004 [0110]-[0111], [0135].

See also EX-1004, [0145-0146], [0135-0138], [0090-0098] (all disclosing various permutations of components used in Lastinger's wireless cells). EX-1003 ¶¶250-252.

[1.2] selecting at least one channel based on one or more channel characteristics, for initiating a first transmission to a first portable wireless device and initiating second transmission to a second portable wireless device, such that at least a portion of the first transmission occurs simultaneously with at least a portion of the second transmission and both occur via a first wireless protocol;

Lastinger discloses several examples of *selecting at least one channel based on one or more channel characteristics, for initiating a first transmission to a first portable wireless device.* EX-1003 ¶¶253-260. Lastinger's "client" portable wireless device may measure received signal strength, or signal quality (or calculate these based on related factors) and report the measurement to the AP to allow it to select the antenna(s) for transmission based on that measurement. EX-1004 [0145-0147], [0100], [0174-0177], [0191-0193]. This element is also discussed below for [1.5] and [1.6] in the discussing of "assigning" channels.

Lastinger teaches a selection of which antenna/radio grouping services each client. EX-1003 ¶254. For example, Lastinger teaches that the physical sectors of the antennas may overlap to form virtual sectors. EX-1004 Abstract, [0085]. The "physical sectors" are created by each radio/antenna grouping as shown in FIG. 22. EX-1004, [0111]. Each "virtual sector" may be serviced by multiple different antenna/radio groups. EX-1004 [0085]. The selection of a "radio" also includes the selection of a channel used by that radio. EX-1004 [0111] ("since a radio uses a single channel…"). Lastinger teaches this ability select the "best" radio/antenna (and therefore channel) throughout, including in FIG. 58 and [0181-0182], [0110].

Lastinger's signal quality is a measure of signal level, noise level, error rate, and other operational and environmental factors from a radio's perspective, and that a radio may perform a signal quality scan by listening to receive signals and

ranking them by their signal quality. EX-[0167]-[0168]. Lastinger's client can send control information to the wireless cell, including signal quality, desired antenna, error rate, number of dropped frames, desired throughput, throughput delivered, wireless cells detected, and/or any other conceivable information (*one or more channel characteristics)*. EX-1004 [0098]. Lastinger's client may also request information or action from the cell, including retransmission, channel change, throughput demands, authentication, variation in transmit power, and/or a request to modify any communication factor (*one or more channel characteristics*). EX-1004 [0098]. EX-1003 ¶255.

Lastinger further discloses that during the association process, a client may send information to the wireless cell including "its desired minimum and maximum throughput needs, desired channel, signal quality for all channels, all detectable wireless cells and physical sectors, physical distance to all wireless cells, local storage capacity, additional available communication protocols, ability to physically move, or any other information useful to the wireless cell in servicing the client" (*one or more channel characteristics*). EX-1004 [0173]. EX-1003 ¶256.

Lastinger recites that the AP receives environment, performance or any other information measured by the client (*one or more channel characteristics*):

> The wireless client may gather any environmental, system, or performance information from each client such as, for example, at least one of channel signal quality from the perspective of the client, buffer size, desired channel, and any other information available from the client.

EX-1004 [0193].

Further, Lastinger expressly recites that this *one or more channel characteristics* information received by the wireless cell "helps the wireless cell manage its communication with the clients it serves", including desired throughput, buffer fullness, signal quality, and/or other relevant information. EX-1004 [0100]. Lastinger further discloses determining optimal channel assignments based on the signal quality information received from the client portable wireless devices. EX-1004 Claim 126, [0145-0147], [0100], [0174-0177], [0191-0198]; EX-1003 ¶¶257-258.

Lastinger discloses *initiating a first transmission to a first portable wireless device and initiating second transmission to a second portable wireless device, such that at least a portion of the first transmission occurs simultaneously with at least a portion of the second transmission and both occur via a first wireless protocol.* EX-1003 ¶¶259-260. For example, Lastinger discloses using antennas (MIMO and non-MIMO) to "enable the wireless cell to service multiple clients simultaneously. The physical sectors

of the antennas may overlap to form virtual sectors that provide greater flexibility in client load management and in simultaneously servicing multiple clients." EX-1004 Abstract. *See also* EX-1004 [0182-0183], [0179], [0146], [0153] (all teaching simultaneous transmissions to multiple clients).

Further, Lastinger discloses that the 802.11 protocols provide minimally interfering channels that allow radios using different channels to operate simultaneously in the same physical area. Minimally interfering channels are advantageous when using overlapping or adjacent physical sectors. EX-1004 [0087]. Thus, a POSA understood that Lastinger's teachings of a cell site using MIMO antennas and utilizing the 802.11 protocols discloses the limitation *initiating a first transmission to a first portable wireless device and initiating second transmission to a second portable wireless device, such that at least a portion of the first transmission occurs simultaneously with at least a portion of the second transmission and both occur via a first wireless protocol.* EX-1003 ¶260.

[1.3] receiving first information from the first portable wireless device that is based on a first measurement performed by the first portable wireless device;

Lastinger discloses several examples of this limitation. EX-1003 ¶¶261-264. Lastinger discloses that "[a]n advanced client may report, for example, at least one

of its desired minimum and maximum throughput needs, desired channel, signal quality for all channels, all detectable wireless cells and physical sectors, physical distance to all wireless cells…." EX-1004 [0173]; *see also* EX-1004 [0189]. To report these metrics, the client device "may measure receive signal strength, or signal quality…." EX-1004 [0146]. Lastinger further discloses:

- That its "client also uses extensions to the 802.11 protocols to communicate control information and requests to the wireless cell to improve data throughput, transmission signal strengths, noise suppression, and other performance factors." EX-1004 [0147].
- That signal quality is a measure of signal level, noise level, error rate, and other operational and environmental factors from a radio's perspective, and that a radio may perform a signal quality scan by listening to receive signals and ranking them by their signal quality. EX-[0167-0168].
- That a client can send control information to the wireless cell, including signal quality, desired antenna, error rate, number of dropped frames, desired throughput, throughput delivered, wireless cells detected, and/or any other conceivable information (*first information... based on a first measurement performed by the first portable wireless device*). EX-1004 [0097-0100];

- That the AP receives environment, performance or any other information measured by the client (*receiving first information... based on a first measurement performed by the first portable wireless device*). EX-1004 [0193].
- That the communication of control or environmental information between a wireless cell and advanced clients may occur at association, during active or passive scans, or at any time allowed by the communication protocol. EX-1004 [0189].

See also [0173-0175], claims 126, 73, 76.

Lastinger's client may also request information or action from the cell, including retransmission, channel change, throughput demands, authentication, variation in transmit power, and/or a request to modify any communication factor (*first information... based on a first measurement performed by the first portable wireless device*). EX-1004 [0098].

Further, Lastinger recites that this first information received by the wireless cell "helps the wireless cell manage its communication with the clients it serves", including desired throughput, buffer fullness, signal quality, and/or other relevant information. EX-1004 [0100].

Thus, the information would include environment, performance, "control information," or any other information measured by the client, including a signal

quality measurement and other measurements discussed above. EX-1003 ¶¶263-264.

[1.4] receiving second information from the second portable wireless device that is based on a second measurement performed by the second portable wireless device;

Lastinger discloses this limitation for the reasons discussed for limitation [1.3].

[1.5] altering at least one aspect of the first transmission, based on at least one of the first information or the second information, so as to reduce interference between the first transmission and the second transmission when the at least portion of the first transmission occurs simultaneously with the at least portion of the second transmission;

Lastinger discloses several examples of altering at least one aspect of the first transmission based on the first or second information to reduce interference. EX-1003 ¶¶266-274.

For example, Lastinger discloses that several examples of wireless cell coverage patterns and how channels may be assigned to reduce interference. Lastinger discloses a channel assignment in FIG. 53, using the three radio, six antenna architecture of FIG. 22, having six physical sectors, overlapping to form six virtual sectors, having 360-degree wireless cell coverage:

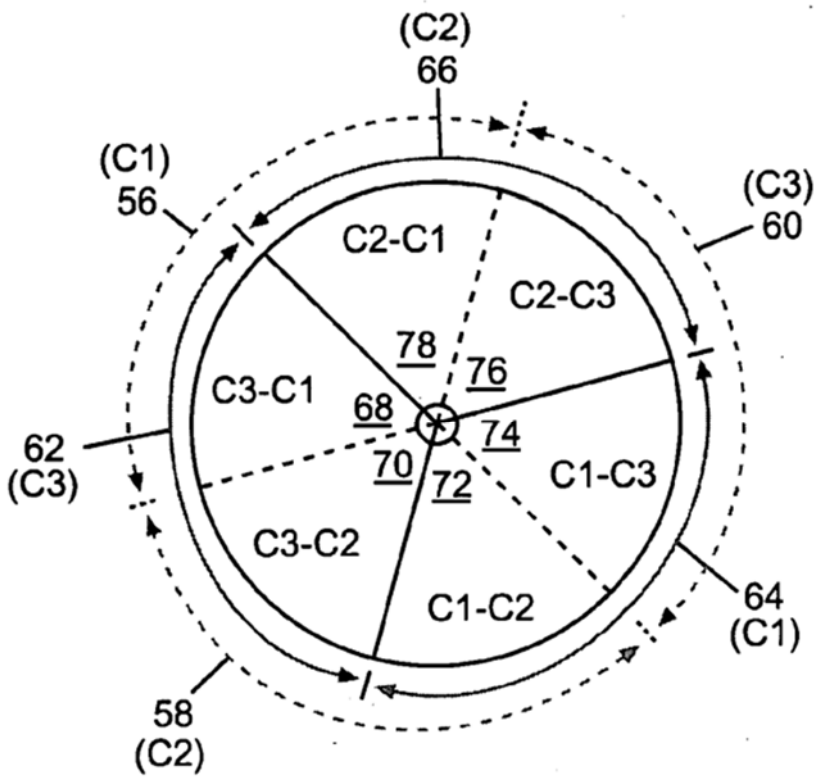

FIG. 53

EX-1004 FIG. 53.

Using three channels allows the radios attached to the antenna physical sectors to operate independently and simultaneously with minimal interference to each other. EX-1004 [0156]. The example shown in FIG. 53 is just one embodiment of a channel assignment, and many combinations exist that produce an exemplary situation where adjacent and overlapping sectors using different channels to reduce interference. EX-1004 [0154], [0162] and [0164]; EX-1003 ¶¶266-268.

Further, Lastinger discloses that multi-sector wireless cells, especially those that use overlapping physical sectors, may use minimally interfering channels to enable multiple radios to transmit and receive simultaneously in the same physical area with less interference. The number of channels needed to reduce interference between physical sectors depends on, for example, the number and arrangement of the physical sectors. Other factors that influence the assignment of channels may include, for example, the channels used by close, foreign wireless cells, multi-path interference, client transmit signal strength, reflected signals, signal attenuation behind the antenna, horn signal attenuation, antenna side lobes, and other factors. EX-1004 [0153]. A POSA understood that Lastinger discloses that channel assignments to reduce interference are based on the first and second information measured at the first and second portable wireless devices. For example, assigning channels is *altering one aspect of the first transmission*, and Lastinger discloses that the "signal quality collected from each radio may be used to determine potential channel assignments for each radio to substantially comply with throughput, or loading specifications" (*altering at least one aspect of the first transmission based on at least the first information or the second information*). EX-1004 [0176]. Another example is that Lastinger discloses changing the channels used for transmission based on signal quality information from the clients, including interference:

> The channel used between the wireless cell and the client may also be established at association. The wireless cell **may change the channels assigned to its physical sectors in response to, for example, interference, loading, throughput demands, or other factors**. In one embodiment, when the wireless cell **changes the channel** used in a physical sector, all clients associated with the physical sector detected, and **follow to the new channel**. Advanced clients may be capable of either negotiating the use of a different channel, or **providing the wireless cell with signal quality information from each client's perspective to assist the wireless cell in determining the best channels to use**.

EX-1004 [0174]. Lastinger's wireless cell might change the channel assignments for one or more of the attached clients based on the feedback information received from the clients. EX-1004 [0191-0198]; EX-1003 ¶269.

Additionally, changing physical sectors to a client is *altering one aspect of the first transmission,* and Lastinger discloses this change may be done for load balancing purposes which a POSA understood to be based on the "throughput demand" received from the clients (*altering at least one aspect of the first transmission based on at least one of the first information or the second information*):

> A wireless cell may **dynamically balance its load by disassociating a particular client with a particular physical sector and accepting an association with a different sector**, or the wireless cell may use control commands to move an advanced client to a different physical

> sector and different channel without requiring the client to repeat the association process. **A client may disassociate with its current physical sector and request association with another physical sector of the same wireless cell**, but in one embodiment, the wireless cell approves the new association request.

EX-1004 [0175][0190]. EX-1003 ¶270.

In yet another example, changing priority of a transmission to a client is *altering one aspect of the first transmission,* and Lastinger discloses changing priority of a transmission to a high throughput client (*altering at least one aspect of the first transmission based on at least one of the first information or the second information*.) EX-1004 [0191][0192]; EX-1003 ¶271.

A further example in Lastinger is its teaching of "[a]n exemplary client also uses extensions to the 802.11 protocols to communicate control information and requests to the wireless cell to improve data throughput, transmission signal strengths, noise suppression, and other performance factors." EX-1004 [0147]; see also EX-1004 [0098-0100]. Lastinger teaches altering the power or transmit attenuation of its transmissions. EX-1004, [0088-0089]. EX-1003 ¶272.

Lastinger's claims recite altering various aspects of the transmission to reduce interference. EX-1004 claim 76 ("adjusting attenuation…"); claim 12, claim 66; claim 79 ("adjusting radio transmission power…"); claim 79 ("adjustment of physical sector size"); claims 83-86; claim 87 (adjusting

"transmission range and reception range"); 91 ("adjusting a size of the physical sectors…"); 120-126; 130-141 (all changing channels); 126. Moreover, Lastinger teaches that may use "a combination of techniques" which alter transmission characteristics "to improve performance" which would include reducing interference. EX-1004, [0101].

Lastinger's disclosure is consistent with the '895 Patent's description that MIMO physical sectors formed using directional antennas may use conventional antenna select methods to reduce interference from noise sources. EX-1001 7:6-8. For example, the '895 Patent simply uses the known features of MIMO antennas such that MIMO physical sectors may be assigned be assigned different channels, and communicate with different wireless devices simultaneously with less mutual interference. Interference between MIMO physical sectors formed using antennas from the same group may be reduced by positioning the MIMO physical sectors in such a way that they do not overlap and communicating using only one MIMO physical sector from the same group at any one time. EX-1001 9:35-38. As noted above, Lastinger contains the same teaching. EX-1003 ¶¶274, 205-224.

[1.6] altering at least one aspect of the second transmission, based on at least one of the first information or the second information, so as to reduce interference between the first transmission and the second transmission when the at least portion of the first transmission occurs simultaneously with the at least portion of the second transmission;

Lastinger discloses this limitation for the reasons discussed for limitation [1.5].

[1.7] transmitting first data in connection with the first transmission to the first portable wireless device;

Lastinger discloses an AP as shown in Figure 22 communicating with clients that permits simultaneous transmission of data with two or more clients using the channel assignments discussed in limitations [1.2], [1.4] and [1.5]. EX-1004 Abstract, [0086], [0089], [0153]. EX-1003 ¶276.

[1.8] transmitting second data in connection with the second transmission to the second portable wireless device;

Lastinger discloses this limitation for the reasons discussed for limitation [1.7].

[1.9] receiving third information from a third portable wireless device that is based on a third measurement performed by the third portable wireless device;

Lastinger discloses this limitation for the reasons discussed for limitations [1.3] and [1.4].

[1.10] altering at least one aspect of a third transmission, based on the third information, for further interference reduction; and

Lastinger discloses this limitation for the reasons discussed for limitations [1.5] and [1.6]; EX-1003 ¶279.

[1.11] transmitting third data in connection with the third transmission to the third portable wireless device, via a second wireless protocol

including a 802.11n protocol, where the first wireless protocol includes another 802.11 protocol other than 802.11n protocol.

Lastinger discloses that the 802.11 protocols provide minimally interfering channels that allow radio using different channels to operate simultaneously in the same physical area. EX-1004 [0087]; EX-1003 ¶¶280-287. Lastinger's "wireless cell embodiments may use any protocol to communicate" including (as examples) "at least one of 802.11a, 802.11b, 802.11g, 802.15, 802.16, Bluetooth, and ultra-wideband…." EX-1004 [0134]. Although Lastinger discusses the 802.11 protocols generically, and names a few specific versions, it does not specifically identify the 802.11n version. However, as discussed in the State of the Art section, by February 2006, multiple iterations of a draft specification of the 802.11n protocol had already been created and were publicly available. EX-1007 (May 2005 draft); EX-1008 (January 2006 draft). See section V.F.4 (discussing prior art patents that referenced the draft specifications). A POSA would have known the content of these drafts and applied that knowledge to Lastinger's repeated reference to "802.11 protocols." EX-1003 ¶¶280, 180-184.

The 802.11n specification included descriptions of using 802.11n with MIMO systems using channel estimation and feedback and required backward compatibility with previous versions of the 802.11 protocols. *Supra* at §V.F.4 (detailing sections within 802.11n specification with feedback, "legacy" device support, and MIMO). Thus, a POSA understood that Lastinger's teachings that

"[t]he 802.11 protocols provide minimally interfering channels that allow radios using different channels to operate simultaneously in the same physical area" and "[e]xemplary protocols for simple clients are the 802.11 communications protocols" would apply equally to the 802.11n protocol. EX-1004 [0087], [0173]; EX-1003 ¶¶281, 180-184.

Moreover, Lastinger notes that "an exemplary client uses the 802.11 protocols and interfaces to a wireless client that uses the same 802.11 protocols…" EX-1004 [0147] (usage of plural protocols teaches or renders obvious using different 802.11 protocols). Lastinger also teaches that its "clients may report … additional available protocols" to the wireless cell for use for transmission. EX-1004 [0189]; EX-1003 ¶282.

Lastinger's teaching is consistent with the disclosure of the '895 Patent which includes only a single reference to 802.11n—"Radios 18-22 use the 802.11a/b/g/n communication protocols."[4] EX-1001 7:14-15. Thus, a POSA understood that the '895 Patent makes no distinction between the various 802.11

[4] This is the only use of 802.11n that was contained in the priority document Pat. No. 8,009,646 filed on February 21, 2007. All other references to 802.11 in the written description were added to the common specification when U.S. Pat No. 10,069,548 was filed on November 28, 2017.

protocols, and thus understood that Lastinger's teaching of using 802.11 protocols applied equally to 802.11n, and using different 802.11 protocols helped minimize interference. EX-1003 ¶¶283-284

Moreover, because the '895 Patent merely cross-references the 802.11n standard (a single time), the '895 Patent necessarily relies upon the knowledge of a POSA to understand the features and capabilities defined in the draft 802.11n standard available prior to the '895 Patent (including simultaneous support for "legacy" devices operating prior 802.11 protocols). Such knowledge of a POSA is also available in understanding and applying the Lastinger prior art for invalidity purposes. EX-1003 ¶284.

To the extent that PO argues that Lastinger does not expressly recite 802.11n, Sadowsky discloses wireless access points using MIMO antennas that utilize any of the 802.11 protocols and specifically references the "MIMO" section of the May 2005 draft 802.11n specification. EX-1009 at 3:31-33. Sadowsky teaches a "'mixed' scenario where the network includes both existing and next-generation Wi-Fi device." EX-1009, 1-48-52, 3:6-25, 5:57-62, 6:10-13, claims 1-20. Sadowsky's disclosure of combining "existing Wi-Fi" 802.11a/b/g systems with "next-generation Wi-Fi" using an 802.11n protocol is far greater teaching of this claim element than the single sparse sentence in the '895 Patent's disclosure merely reciting the word 802.11(n). EX-1003 ¶285.

A POSA would be motivated to modify the teachings of Lastinger to include the 802.11n protocol for several reasons. EX-1003 ¶¶241-248, 286-287. ***First***, Lastinger expressly teaches that "[t]he 802.11 protocols provide minimally interfering channels that allow radios using different channels to operate simultaneously in the same physical area" for its MIMO capable system, and Sadowsky expressly teaches that the 802.11n protocol is specifically for MIMO wireless systems. EX-1004 [0087]; EX-1009 1:17-59; EX-1003 ¶¶286, 180-184. Thus, the references themselves expressly recite the motivation to combine the teachings of the references in order to allow the use of minimally interfering channels. ***Second***, Sadowsky expressly teaches that 802.11n is for "high throughput", and an expressly stated goal of Lastinger is to provide "high throughput" access points that communicate with "high throughput" clients. EX-1004, Abstract, [0191]; EX-1009, 3:31-33, 5:20-36; EX-1003 ¶244. Thus, a POSA would be modified to use 802.11n with to achieve Lastinger's stated goal. ***Third***, as discussed in the State of the Art, and expressly taught by Sadowsky, a POSA understood that 802.11n was backward compatible with previous versions of the 802.11 protocols, which achieves Lastinger's express objective that any 802.11 protocol could be used and enables new next generation access points to communicate with legacy access points. EX-1004 [0087], [0173]; EX-1009, 1:35-

43. Thus, a POSA would be motivated to modify the teachings of Lastinger to include the 802.11n protocol taught by Sadowsky. EX-1003 ¶245.

Moreover, because a POSA understood that the 802.11 standards (including the draft 802.11n standard) required backward compatibility to previous versions of 802.11 (such as a/b/g) to support "legacy" devices and the '895 Patent specification confirms that the different version of 802.11 protocols are considered equivalent, a POSA would be confident of the success for combining these teachings. EX-1003 ¶¶246-248.

b. <u>Claim 2</u>

[2] The computer-implemented method of claim 1, wherein the third transmission to the third portable wireless device is initiated via a particular channel that is different, in at least one respect, from the at least one channel, for preventing interference between the third transmission via the 802.11n protocol, and at least one of the first transmission or the second transmission via the another 802.11 protocol.

Lastinger, alone or in combination with Sadowsky, discloses this limitation for the reasons set forth for limitation [1.5] and [1.11]. EX-1003 ¶¶288-293. For example, FIG. 53 illustrates the use of three channels to prevent interference:

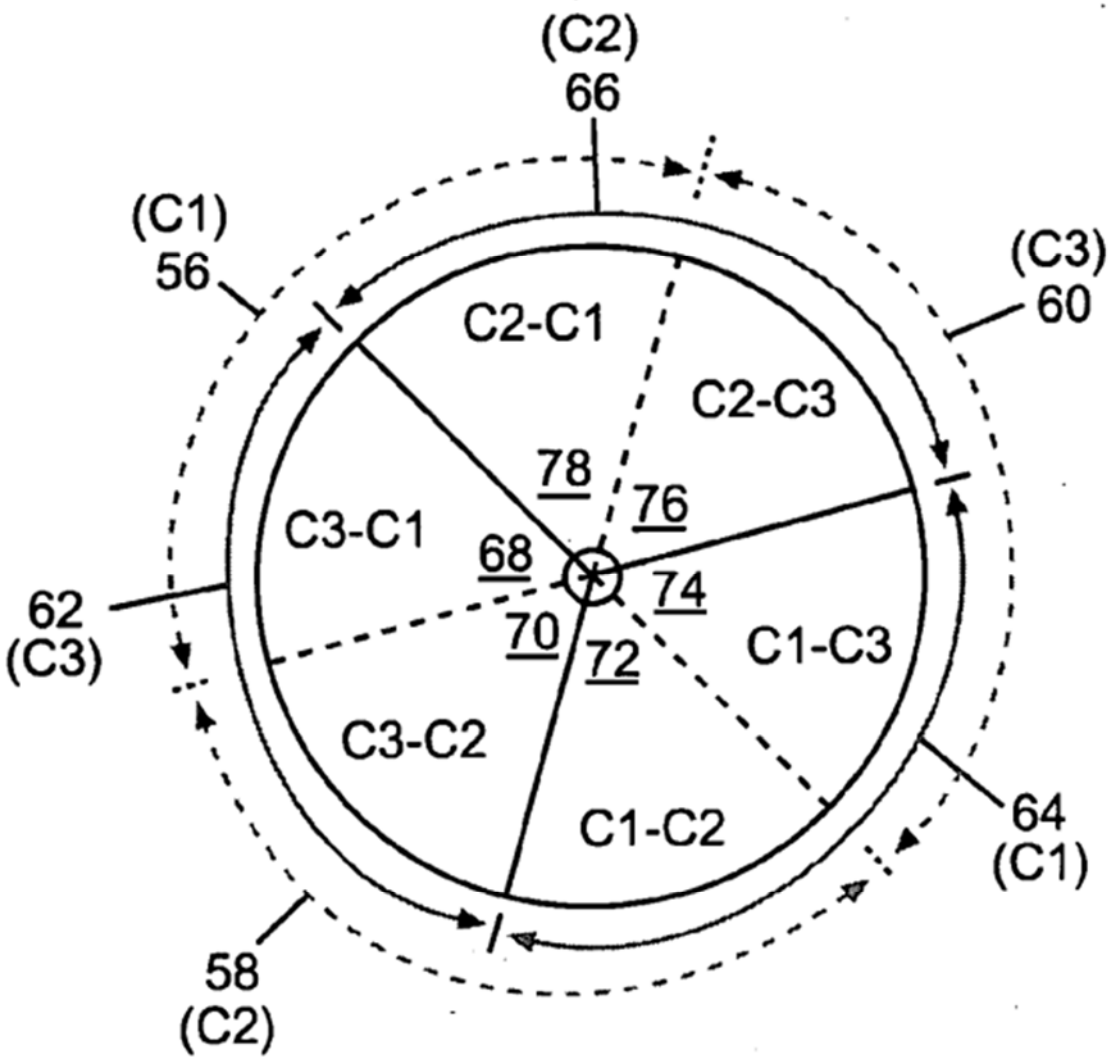

FIG. 53

EX-1004 FIG. 53. *See also* EX-1004 Abstract ("Systems and methods for assigning minimally interfering channels to either physical sectors or to radios to reduce interference …"); FIGS 40-50; [0156] ("FIG. 40 through FIG. 50 … are

representative of how channels may be assigned to reduce interference…"); [0145] ("reduce interference…"); [0153] ["use minimally interfering channels …"); [0154]; 0174 (change channels to address interference); [0095] ("assigning channels to avoid interference…"); [0157-0160]; [0162-0163] (teaching channel assignments to reduce interference).

In Lastinger, the channel assigned to a particular client may depend upon the sector to which the device is associated. *E.g.*, EX-1004 [0170-0186]. Sectors may be associated with different channels as noted above. Thus, Lastinger teaches any number of different clients using different channels if those clients are associated with sectors that are using different channels. EX-1003 ¶289.

A POSA understood that Channels C1, C2, and C3 may be different from each other in at least one respect (such as different frequencies or encoding schemes). EX-1004 [0153]. EX-1003 ¶290. Further, Lastinger discloses that the wireless cell embodiments may use any protocol to communicate with other wireless cells, clients, or other wireless devices, including 802.11a, 802.11b, 802.11g, 802.15, 802.16, Bluetooth, and ultra-wideband. EX-1004 [0134]; *see also* [0087] ("The 802.11 protocols provide minimally interfering channels that allow radios using different channels to operate simultaneously in the same physical area….").

Lastinger teaches that its transmissions to wireless clients can use the same channel or different channels. EX-1004 claims 104-119 (teaching channel assignments using either "same channel" or "different channels"); [0154-0163]; [0087]. EX-1003 ¶¶291, 211-217.

In discussing the 802.11n protocol, Sadowsky notes that "[t]he main enabling technologies for next-generation Wi-Fi systems to achieve increase data throughput are the use of several existing Wi-Fi channels in parallel, and the use of MIMO (multiple-input, multiple-output) techniques." EX-1009 1:31-35. The "in parallel" teaches or suggest simultaneous use of channels including either the same, or different, channels. EX-1003 ¶292. Sadowsky also teaches that legacy 802.11 channels use 20 MHz channels while the 802.11n "next-generation" use 40 MHz channels (which teaches a different channel). EX-1009 at 1:52-57. "OFDM … provides enhanced operation over existing Wi-Fi (Wireless Fidelity) wireless channels while maintaining a certain level of compatibility with existing Wi-Fi..." in "multi-carrier" systems. EX-1009 2:33-60. Sadowsky teaches a system that allow 802.11n to be on a higher throughput channel (using a larger number of symbols) while allowing legacy 802.11 communications on a lower bandwidth channel. EX-1009 2:66-3:25, 5:10-16, 5:50-56; EX-1003 ¶¶292-293.

Lastinger also makes clear that a wireless cell may use different 802.11 protocols as discussed above. EX-1004 [0134]. Sadowsky expressly discloses the

simultaneous use of 802.11n and other 802.11 protocols. Thus, Lastinger, alone or in combination with Sadowsky, discloses this limitation. EX-1003 ¶¶288-293.

c. <u>Claim 3</u>

[3] The computer-implemented method of claim 2, wherein a plurality of radios are utilized including a first radio configured to communicate via the another 802.11 protocol and a second radio configured to communicate via the 802.11n protocol, and different antennas are used for the another 802.11 protocol and the 802.11n protocol, so that sufficient resources are available to the 802.11n protocol and the another 802.11 protocol, when at least a portion of the third transmission occurs simultaneously with at least one of the first transmission or the second transmission.

As discussed for limitations [1.1], [1.5], [1.6], [1.11] and Claim 2, Lastinger, alone or in combination with Sadowsky, discloses an architecture illustrated in FIG. 22 that can use the channel assignment reflected in FIG. 53 having multiple radios using different permutations of antennas and virtual and physical sectors to all simultaneous transmissions with three wireless portable devices using different 802.11 protocols while avoiding interference in the transmissions. EX-1003 ¶¶294-295.

The '895 patent specification does not use the terms "sufficient" or "resource" nor does it teach how "sufficient resources are available to the 802.11n protocol." In contrast, Lastinger teaches how to "assign resources" and other resource management to ensure proper throughput for its clients, including advanced clients. EX-1004, [0190-0198]; claims 129-142. EX-1003 ¶295.

d. <u>Claim 4</u>

[4] The computer-implemented method of claim 3, wherein the at least one channel includes multiple channels that, together, have a greater bandwidth than the particular channel.

Lastinger, alone or in combination with Sadowsky, discloses this limitation. EX-1003 ¶¶296-299. Lastinger discloses multiple channels being used by a cell site as shown in FIG. 53 as discussed for limitations [1.5], [1.6], 2 and 3, where the at least one channel can include multiple channels C1, C2 and C3 (assuming C1, C2 and C3 are different channels of the same bandwidth), which together have great bandwidth than any particular channel individually. Moreover, as noted in [1.1], any number of channels may be used simultaneously by the wireless cell. EX-1004 [0146], [0163]; [0153-0159].

Furthermore, Lastinger repeatedly teaches channel assignments for the purpose of increasing throughput – which teaches, or renders obvious, greater bandwidth. EX-1004, [0007] ("the enhanced antenna system includes at least one of …minimally interfering radio channels to enable multiple antennas and multiple radios to substantially simultaneously operate in a single wireless cell and to provide increased throughput…."); [0178-0179]; 0189-0198 (describing the use of multiple channels to increase throughput / bandwidth); Abstract ("multiple radios to increase the amount of throughput available" with channels corresponding to radios); *see also* [0101] (Lastinger's "system may … use … channel assignment …

and/or a combination of techniques to improve performance"); claims 129-142 (adjusting channels to increase throughput); FIGS. 64-68 (teaching increasing throughput through channel adjustments). See EX-1003 ¶297.

Moreover, the knowledge of a POSA includes that the 802.11 protocols allow for "channels" to be comprised of multiple "sub-channels." E.g., EX-1007 at Fig. 25, section 11.1.1.3 (showing two sub-channels in each channel). EX-1003 ¶¶298.

Finally, Sadowsky includes extensive teachings that the 802.11 channels can be either multiple 40MHz or 20 MHz channels and "the use of several existing Wi-Fi channels in parallel." EX-1009, 1:30-60, 2:66-3:25; 5:50-6:5, FIG. 4, claims 14-15. EX-1003 ¶¶299.

e. <u>Claim 5</u>

[5] The computer-implemented method of claim 1, wherein the at least one channel includes multiple channels including a first channel and a second channel, and the first transmission to the first portable wireless device is initiated via the first channel, and the second transmission to the second portable wireless device is initiated via the second channel.

Lastinger, alone or in combination with Sadowsky, discloses this limitation for the reasons for limitations [1.11], [2], [4]. EX-1003 ¶300.

f. <u>Claim 6</u>

[6] The computer-implemented method of claim 1, wherein the first transmission and the second transmission are both initiated on the at least one channel which includes the same single channel.

Lastinger, alone or in combination with Sadowsky, discloses this limitation for the reasons for limitations [1.11], [2], [4]. EX-1003 ¶¶301-303. Lastinger discloses several well-known methods for initiating a first and second transmission simultaneously to two portable wireless devices on the same channel. For example, a well-known MIMO feature allows the same channel to be used simultaneously in transmissions to two wireless portable devices using the different antennas that form the MIMO transmission. EX-1004 [0103-0105], [0146] and [0153]; EX-1003 ¶¶301, 104-115, 128-138. This would also include the scenario in which multiple different radios each controlled a different stream being transmitted at the same time on the same channel to different devices. EX-1004 [0103-0105], [0146] and [0153]; EX-1003 ¶¶301, 104-115, 128-138.

Lastinger also teaches "time-multiplexed techniques" to provide for multiple devices on the same channel. EX-1004 [0154] ("time multiplexing techniques [when] us[ing] the same channel"), [0156-0159], [0163], [0179]. EX-1003 ¶302.

As noted in [1.11] and [2], Lastinger's different sectors may use the same channel. EX-1004 [0156-0163], claim 106 (different sectors assigned the same channel). If the first and second devices are in sector(s) that are assigned to the same channel, then this element is also met. For example, as taught in [0163], if

one device is in sector 56 and the second device is in sector 58, the first and second transmissions would use the "same channel" because "sectors 56, 58, and 60" were assigned to "the same channel." EX-1003 ¶303.

g. <u>Claim 7</u>

[7] The computer-implemented method of claim 1, wherein the third transmission to the third portable wireless is initiated via a particular channel that is different from the at least one channel.

Lastinger, alone or in combination with Sadowsky, discloses this limitation for the reasons for Claim [1.11], [2], and [4]. EX-1003 ¶304.

h. <u>Claim 8</u>

[8] The computer-implemented method of claim 1, wherein the third transmission to the third portable wireless device is initiated via a particular channel that is the same as the at least one channel.

Lastinger, alone or in combination with Sadowsky, discloses this limitation for the reasons for Claim 6 (explaining various teachings allowing for communication to different devices on the same channel). EX-1003 ¶305.

i. <u>Claim 9</u>

[9] The computer-implemented method of claim 1, wherein the first transmission occurs simultaneously with the second transmission with both the first transmission and the second transmission using all of the antennas.

Lastinger discloses that the number of antennas being used is selectable. For example, servicing a physical sector with a MIMO antenna means that all antennas in the MIMO array may use the channel assigned to the physical sector. EX-1004

[0104]. Lastinger's disclosure is very broad with respect to channel selection and the number of antennas used:

> Each embodiment described below shows a single radio and assumes that only one antenna is active a time; however, the embodiments may include any number of antennas available, **<u>any number of antennas in simultaneous use</u>**, any number of radios, overlapping or non-overlapping physical sectors, physical sector positioning, and/or communication protocols used.

EX-1004 [0146].

Lastinger discloses using multiple antennas in a MIMO array to transmit signals to and receive signals from a portable wireless device:

> During transmission or reception, **<u>all or any subset of antennas in the MIMO array</u>** may be used or selection diversity may be used to limit the number of antennas used.

EX-1004 [0103].

Thus, a POSA understood that Lastinger discloses using a MIMO array for the first and second transmissions where all antennas would be used. Or, alternatively, the transmissions to the separate devices could each use one of the sets of antennas/radios disclosed in Lastinger as disclosed in the Abstract ("Multiple antennas attached to the radios through RF switches may enable the wireless cell to service multiple clients simultaneously"). EX-1003 ¶¶306-308.

j. <u>Claim 10</u>

[10] The computer-implemented method of claim 1, wherein the first transmission occurs simultaneously with the second transmission with both the first transmission and the second transmission using different subsets of the antennas.

Lastinger discloses this limitation for the reasons for Claim 9. EX-1003 ¶309. For example, one of the features of using MIMO antennas is the ability to use "any number of antennas available, any number of antennas in simultaneous use" and "all or any subset of antennas" or each different client can be served by a different radio/antenna combination using either MIMO or non-MIMO transmission. EX-1004 [0103], [0146].

k. <u>Claim 11</u>

[11] The computer-implemented method of claim 1, wherein the multiple-input-multiple-output (MIMO)-capable access point includes a multiple-user multiple-input multiple-output (MU-MIMO)-capable access point.

As shown in claims 1, 2, 4, 5, 6 above, Lastinger discloses that its MIMO-capable wireless cell (*MIMO-capable access point*) allows servicing multiple clients simultaneously (*MU-MIMO-capable*) including, for example, for different antennas/radio groupings transmitting to different client devices. EX-1003 ¶¶310-311, 127-141. For example, Lastinger teaches:

> Multiple antennas attached to the radios through RF Switches may enable the wireless cell to service multiple clients simultaneously. The physical sectors of the antennas may overlap to form virtual sectors that provide

> greater flexibility in client load management and in simultaneously servicing multiple clients.

EX-1004 Abstract. *See also* EX-1004 [0105], [0103]. Notably, the '895 Patent's priority document does not contain any reference to "MU-MIMO" or "multiple-user" MIMO. Rather, at most, it discloses an access point that can service multiple client devices – just like Lastinger.

Likewise, Sadowsky teaches an AP communicating with multiple client devices using the 802.11n MIMO capabilities – which teaches MU-MIMO. EX-1009 FIGS. 1-2, 3:27-5:2. Thus Lastinger, alone or in combination with Sadowsky discloses this limitation. EX-1003 ¶¶310-311, 127-141.

l. <u>Claim 12</u>

[12] The computer-implemented method of claim 1, and further comprising: utilizing a plurality of radios including a first radio configured to communicate via the another 802.11 protocol and a second radio configured to communicate via the 802.11n protocol, so that sufficient resources are available to the 802.11n protocol and the another 802.11, when at least a portion of the third transmission wherein the third transmission occurs simultaneously with at least one of the first transmission or the second transmission.

Lastinger, alone or in combination with Sadowsky, discloses this limitation for the reasons for limitations [1.1], [1.11], [2], [3], and [4]. EX-1003 ¶312. As noted in [1.1], Lastinger teaches a wide variety of permutations of different radios (the same permutations as taught in the '895 Patent) to be used for the different transmissions (such as, for example, through different sectors) to different clients

which, as the Abstract says, can all be serviced "simultaneously." As shown in [1.11], [2], [3], and [4], Lastinger, alone or in combination with Sadowsky, teaches or renders obvious that the different transmissions (which can be using different radios) can use different 802.11 protocols including 802.11n. See claim [3] for discussion of "sufficient resources."

m. <u>Claim 13</u>

[13] The computer-implemented method of claim 1, wherein a channel difference is used for the 802.11n protocol and the another 802.11 protocol for increased data throughput.

Lastinger, alone or in combination with Sadowsky, discloses this limitation for the reasons discussed for Claims 1 and 4. EX-1003 ¶¶313-315. Further, Lastinger discloses that the wireless cell can use different channels (e.g., channels C1, C2, C3) and different 802.11 protocols which minimizes interference and increases data throughput. EX-1004 [0087], [0134], [0155], [0187]. Lastinger teaches other channel differences that result in increased throughput. These include different "type of encoding including, for example, OFDM, space-time-codes" (EX-1004, [0103]) and different "encoding and decoding schemes, modulating and demodulating schemes." EX-1004 [0153]. Different encoding can result in increased data throughput. Furthermore, Lastinger teaches using "extensions to the 802.11 protocols to communicate control information and requests to the wireless cell to improve data throughput…." EX-1009 [0147].

Moreover, Lastinger specifically teaches the assignment of different channels to increase data throughput for particular devices. EX-1004, FIGS. 60-68, [0188-0198], claims 129-142; EX-1003 ¶314. Notably, the '895 patent does not contain any teaching that a channel difference can be used to increase data throughput for 802.11 protocols as recited by claim 13.

Sadowsky expressly discloses that its 802.11n channels are the "high-throughput" channels. EX-1009, 3:31-33, 5:20-36. Sadowsky's 802.11n channels used 128 subcarriers in 20 MHz channels which allows higher throughput than the 64 carriers used in legacy 802.11n systems. EX-1009, Abstract, 2:66-3:25, 5:20-36, 6:14-67. The number subcarriers (and the guard bands) in Sadowsky is a "channel difference" for this claim. EX-1003 ¶315. The different subcarriers also reflect a different "encoding" for the channel as discussed in Lastinger. EX-1003 ¶315.

n. <u>Claim 14</u>

[14.0] The computer-implemented method of claim 1, wherein different radios, different antennas, and a channel difference are used for the first wireless protocol and the second wireless protocol for increased data throughput.

Lastinger, alone or in combination with Sadowsky, discloses this limitation for the reasons for limitations [1.0], [1.1], [4], [12], and [13]. EX-1003 ¶316. For example, FIG. 22 illustrates a wireless cell having different radios, different antennas and channel differences using different wireless protocols (and

extensions thereto) to increase data throughput while servicing different clients. EX-1004 [0087], [0134], [0147], [0155], [0187], [0190-0198]. The claim is ambiguous as to whether the "increased data throughput" is for a specific device or considering the overall wireless cell capacity. However, Lastinger discloses both in the citations above. Furthermore, another "channel difference" might be that the first transmission uses MIMO (increasing throughput) while the second transmission does not use MIMO (or uses a different form of MIMO that provides enhanced reliability as opposed to increased throughput). EX-1003 ¶316.

o. <u>Claim 15</u>

[15.0] A computer-implemented method, comprising: positioning one or more multiple-input-multiple-output (MIMO)-capable access points so that the one or more multiple-input-multiple-output (MIMO)-capable access points provide a coverage dictated by a person positioning the one or more multiple-input-multiple- output (MIMO)-capable access points, each of the one or more multiple-input-multiple-output (MIMO)-capable access points including:

The prior art discloses this limitation for the reasons discussed for limitation [1.0].

[15.1] – [15.11];

Claim elements 15.1 through 15.11 are identical to elements 1.1 through 1.11.

The prior art discloses these limitations for the reasons discussed for limitations 1.1 through 1.11.

p. <u>Claim 16</u>

[16] The computer-implemented method of claim 15, [same language as claim 2].

Lastinger, alone or in combination with Sadowsky, discloses this limitation for the reasons for Claims 2, 7.

q. <u>Claim 17</u>

[17] The computer-implemented method of claim 16, [same language as claim 3].

Lastinger, alone or in combination with Sadowsky discloses this limitation for the reasons for Claim 3.

r. <u>Claim 18</u>

[18] The computer-implemented method of claim 15, wherein the at least one aspect of the first transmission is altered based on at least one of the first information or the second information, so as to direct the first transmission more towards the first portable wireless device as compared to the second portable wireless device; and the at least one aspect of the second transmission is altered based on at least one of the first information or the second information, so as to direct the second transmission more towards the second portable wireless device as compared to the first portable device.

Lastinger discloses altering at least one aspect of the first transmission based on at the least the first or second information as discussed for limitation [1.5]. EX-

1003 ¶¶322-323. Further, Lastinger discloses that that the MIMO antennas can steer a transmission towards a portable device:

> When transmitting, the MIMO antenna may use any type of encoding including, for example, OFDM, space-time-codes, or weighting of the antenna signals in the array to accomplish beam steering.

EX-1004 [0103]. *See also* EX-1004 [0105] ("adaptive array" directional beams). A POSA understood that beam steering is used to form "beams" that can be used to direct a transmission more towards a desired portable wireless device.

Moreover, Lastinger also teaches this element with the use of sectors as noted in claim 1 (such as selecting a sector). If the first device is in a particular sector and the second device is in a second (different) sector, Lastinger will use the first and/or second informations to direct the transmissions to the appropriate sector. This is shown throughout Lastinger including in EX-1004 [0155-0182]. For example, as shown in Lastinger in [0183], different clients (e.g., "CL18 and CL13") can be served by different radios associated to different sectors. As noted in claim 1, the specific aspect of the service (such as channels, sectors, power, encoding…) can be based upon the information transmitted from each client to the wireless cell. EX-1003 ¶323.

s. <u>Claim 19</u>

[19] The computer-implemented method of claim 15, [same language as claim 5].

Lastinger, alone or in combination with Sadowsky, discloses this limitation for the reasons for Claim 5.

t. <u>Claim 20</u>

[20] The computer-implemented method of claim 15, [same language as claim 6].

The prior art discloses this limitation for the reasons for Claim 6.

u. <u>Claim 21</u>

[21] The computer-implemented method of claim 15, [same language as claim 7].

The prior art discloses this limitation for the reasons for Claim 7.

v. <u>Claim 22</u>

[22] The computer-implemented method of claim 15, [same language as claim 8].

The prior art discloses this limitation for the reasons for Claim 8.

w. <u>Claim 23</u>

[23] The computer-implemented method of claim 15, and further comprising: utilizing a plurality of radios including a first radio configured to communicate via the first wireless protocol and a second radio configured to communicate via the second wireless protocol .

Lastinger, alone or in combination with Sadowsky, discloses this limitation for the reasons for Claims 3 and 12.

x. <u>Claim 24</u>

[24] The computer-implemented method of claim 15, and further comprising: [same language as claim 12].

Lastinger, alone or in combination with Sadowsky, discloses this limitation for the reasons discussed for Claims 3 and 12.

y. <u>Claim 25</u>

[25] The computer-implemented method of claim 15, wherein the first portable wireless device includes a first multiple-input-multiple-output (MIMO)-capable portable wireless device, and the second portable wireless device includes a second multiple-input-multiple-output (MIMO)-capable portable wireless device.

Lastinger discloses that clients may be MIMO-capable. EX-1004 [0102-0103].

z. <u>Claim 27</u>

[27.0] A computer-implemented method, comprising: providing access to a multiple-input-multiple-output (MIMO)-capable access point including:

The prior art discloses this limitation for the reasons discussed for limitation [1.0].

[27.1] a plurality of antennas; and circuitry in communication with the antennas; and at least one radio in communication with the circuitry;

Lastinger discloses this limitation for the reasons discussed for limitation [1.1].

[27.2] sending a first signal to a first portable wireless device; receiving a second signal from the first portable wireless device; based on the

second signal, permitting data communication via the multiple-input-multiple-output (MIMO)-capable access point for the first portable wireless device;

Lastinger teaches that the wireless cell can "poll" (*sending a first signal to*) the clients to obtain the information (receiving a second signal) on which the subsequent communications are performed as discussed in claim [1.3]. EX-1004 [0190], [0192], claims 73-78. EX-1003 ¶¶333-337.

Lastinger further discloses this limitation because it discloses several examples of the wireless cell (*MIMO-capable access point*) and the client (*portable wireless device*) communicating with each other to associate the client with the wireless cell with such association process "typically" required. EX-1004 [0170].

By way of further example, Lastinger discloses that when using the 802.11 protocols, "a client is a device that associates with and uses the network services of access points" and exchanges various forms of "control information" to permit communication. EX-1004 [0097-0098], [0100], [0135], [0147]. EX-1003 ¶335.

As another example, a POSA understood that for the 802.11 protocols, a client associates with a wireless cell through a process called authentication. Lastinger discloses that both the wireless cell and the client send <u>authentication messages</u>. EX-1004 [0098], [0189]. Lastinger's disclosure is consistent with the

895 Patent's disclosure that the first and second signals recited in Claim 28 "are communicated for authentication purposes." EX-1003 ¶336.

Thus, a POSA understood that Lastinger discloses that the access point may send a first signal to the client, and receive a second signal from the client, both signals for purposes that eventually allow the devices to communicate. These purposes can include authentication, to thereby associate the client with the access point and permit communication via the MIMO-capable access point as well as exchanges of information such as protocols, capabilities and other "control information" that permit the devices to communicate. EX-1003 ¶¶333-337.

[27.3] sending a third signal to a second portable device; receiving a fourth signal from the second portable wire device; based on the fourth signal , permitting data communication via the multiple-input-multiple-output (MIMO)-capable access point for the second portable wireless device;

Lastinger discloses this limitation for the reasons discussed for limitation [27.2].

[27.4] selecting at least one channel based on one or more channel characteristics, for initiating a first transmission to a first portable wireless device and initiating second transmission to a second portable wireless device, such that at least a portion of the first transmission occurs simultaneously with at least a portion of the second transmission and both occur via a first wireless protocol;

Lastinger discloses this limitation for the reasons discussed for limitation [1.2].

[27.4]-[27.11] [same language as in 1.3-1.10];

Claim elements 27.4 through 27.11 are identical to elements 1.3 through 1.10.

Lastinger, alone or in combination with Sadowsky, discloses these limitations for the reasons discussed for limitations 1.3 through 1.10.

[27.12] transmitting third data in connection with the third transmission to the third portable wireless device, via a second wireless protocol.

Lastinger, alone or in combination with Sadowsky, discloses this limitation for the reasons for Claim limitation [1.11].

aa. <u>Claim 28</u>

[28] The computer-implemented method of claim 27, wherein the first signal, the second signal, the third signal and the fourth signal, are communicated for authentication purposes.

Lastinger discloses this limitation for the reasons discussed for limitation [27.2] and [27.3]. EX-1003 ¶¶343-344.

Lastinger teaches that the signaling between the wireless cell and clients can be for "authenticating the client" or "authentication." EX-1004, [0189]. [0098]. Notably, the '895 patent specification does not recite or mention "authentication" or any comparable term.

bb. <u>Claim 29</u>

[29.0] A computer-implemented method, comprising: positioning one or more multiple-input-multiple-output (MIMO)-capable access points so that one or more multiple-input-multiple-output (MIMO)-capable access points provide a desired coverage , each of the one or more multiple-input-multiple-output (MIMO)-capable access points including:

Lastinger discloses this limitation for the reasons discussed for limitations [15.0] and [1.0] and because the MIMO antennas of the cell site access point "provide a desired angle and area of coverage." EX-1004 [0103]. EX-1003 ¶345.

[29.1] [same language as in 1.1];

Lastinger discloses this limitation for the reasons discussed for limitation [1.1].

[29.2] causing communicative coupling between the one or more multiple-input-multiple-output (MIMO)-capable access points and a server;

Lastinger discloses that a wireless cell is an "is an access point, which combines wireless communication with an I/O port connected to a wired network thereby allowing communication between wired and wireless devices." EX-1004 [0090]. See also EX-1004 [0133] (I/O port for communicating to non-wireless devices which allows for use as an "access point."); [0135-0144, 0152]. A POSA would have understood that the disclosure of the access point allowing communication between wireless devices and a "wired network" would render obvious that the access point would be coupled to one or more servers. Such

server would include both servers that provide data to the wireless devices and servers that provide information such as domain name resolution servers used for accessing the Internet.

Furthermore, the devices communicating through the I/O port are all under the control of a "processor" (EX-1004, [0090]) and a POSA understood that a server is rendered obvious by the disclosure of processor-controlled devices, and thus Lastinger discloses a plurality of access points and a server communicatively coupled together. EX-1003 ¶¶47-353.

The concept that communication with a "wireless cell" or a "processor" discloses (or renders obvious) the claimed "server" is supported by the changes made to the '895 Patent as compared to its priority document, WO20071088885 (EX-1014) because the '895 inventors used "wireless device," "file server" and "processor" interchangeably. For example, FIG. 11 of the '895 Patent show "file server 10" apparently coupled to the wireless cell:

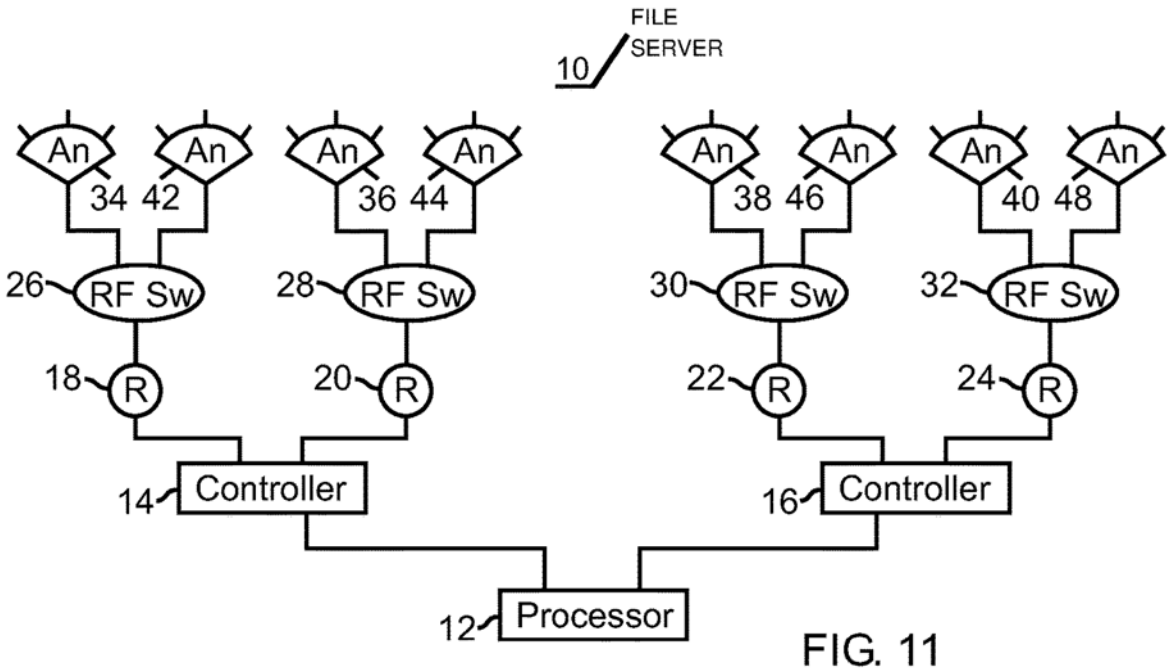

FIG. 11

EX-1001, FIG. 11.

In the ’895 specification (and in the priority document specification), element “10” is referenced as “wireless device” or a “processor” that interfaces with the wireless cell.

> referring to FIG. 11, wireless device 10 comprises a process 12, controllers 14, 16 interfaces with processor 10, …

EX-1001, 8:50-51.

Notably, in the priority document, the term “file server” was not associated with element 10 in FIG. 11 (or anywhere else).

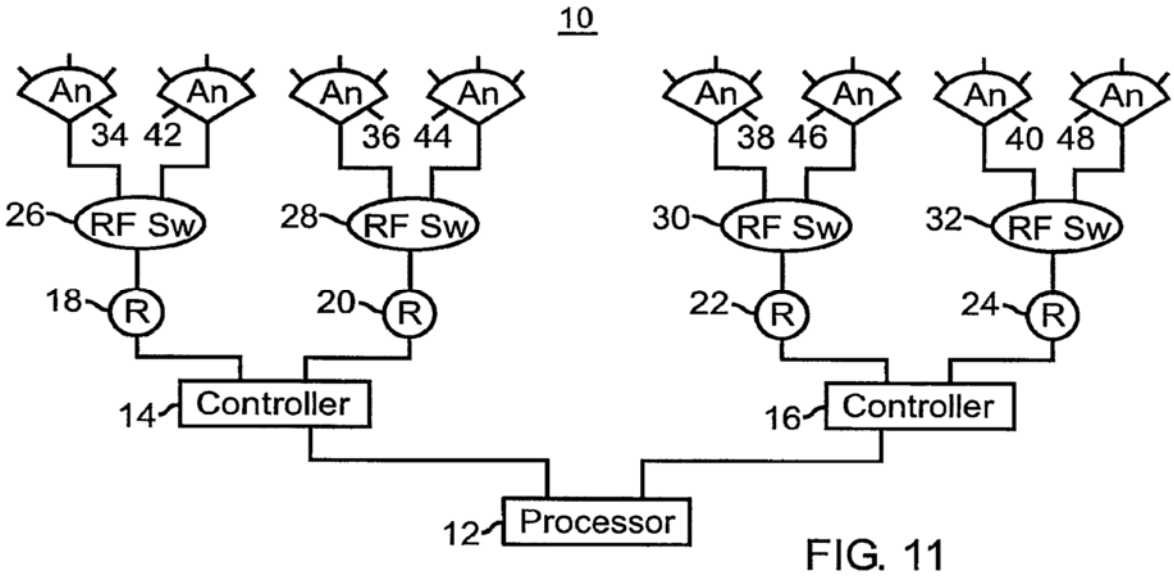

FIG. 11

EX-1014, FIG. 11.

Indeed, the applicant added the term "file server" to element 10 in Figures 1-18 in 2018. This term "file server" was not in FIGS. 1-18 in the '895 priority document. EX-1014 FIGS. 1-18.

Thus, the applicant's alteration of "wireless device" or "processor" 10 to be "file server 10" confirms that Lastinger's disclosure of the "wireless cell" being coupled to other "wireless cells" as well as wired and wireless devices controlled by "processor(s)" (EX-1004, [0090]) discloses this claim element. EX-1003 ¶¶347-353.

[29.3] receiving a first signal from a first portable wireless device; based on the first signal, permitting data communication via the multiple-input-multiple-output (MIMO)-capable access point for the first portable wireless device;

Lastinger discloses this limitation for the reasons for limitation [27.2].

[29.4] receiving a second signal from a second portable wire device; based on the second signal , permitting data communication via the multiple-input-multiple-output (MIMO)-capable access point for the second portable wireless device;

Lastinger discloses this limitation for the reasons for limitation [29.3].

[29.5] through [29.14].

Claim elements 29.5 through 29.14 are identical to elements 1.2 through 1.11.

Lastinger, alone or in combination with Sadowsky, discloses these limitations for the reasons for limitations 1.2 through 1.11.

VIII. THE BOARD SHOULD NOT EXERCISE ITS DISCRETION AND DENY INSTITUTION

A. The Board Should Not Deny Institution Under 35 U.S.C. § 325(d)

The ’895 Patent has not been previously challenged in an IPR. While Lastinger was cited on the face of the ’895 Patent, it was not applied by the examiner. Instead, during prosecution of the ’895 Patent, Lastinger was provided in an IDS with over 700 other references. Moreover, although the specification for the ’895 Patent identified the application number of Lastinger and incorporated it by reference, the applicant did not disclose that the identified application published as Lastinger more than one year before the priority date of the ‘895 Patent. Nor did the applicant make any attempt to identify that Lastinger disclosed each of the

limitations of the pending claims. Thus, Lastinger was buried with hundreds of other references and not effectively before the examiner. As a result, the examiner allowed the claims of the '895 Patent based on the filing of a terminal disclaimer and without issuing a substantive rejection of the claims over the prior art.

B. The Board Should Not Deny Institution Under 35 U.S.C. § 314(a)

Related to the Director's June 2022 interim guidance regarding application of the *Fintiv* factors[5], this Petition is particularly strong in the underlying merits as it demonstrates that the exact functionality and structure recited in the claims existed in the prior art. Thus, under the Interim Guidance, the Board should not deny institution.

Nevertheless, the Board's decision in *Sotera Wireless, Inc. v. Masimo Corp.*, IPR2020-01019, Paper 12 (Dec. 1, 2020) instructs that a holistic view of the remaining *Fintiv* factors also weighs in favor of institution.

Factor 1 is neutral because no request for stay has been filed.

Under factor 2, the trial date in the Related Litigation has been set for September 9, 2024, but that is not a date certain, considering the "Court's long-

---

[5] Interim Procedure For Discretionary Denials In AIA Post Grant Proceedings With Parallel District Court Litigation, PTO Director's Memorandum (June 21, 2022).

standing practice … to set multiple cases to begin trial on the same day," which can result in the court having a "backlog of cases to try later." *Atlas Global Techns. LLC v. TP-Link Techns. Co., Ltd., et al*., Case No. 2:21-cv-00430-JRG, Dkt. 295 (E.D.Tex. Aug. 24, 2023). A Final Written Decision is expected in the present matter in April of 2025. Thus, this factor is neutral or only slightly favors discretionary denial.

Factor 3 favors institution. The Markman hearing is scheduled for March 13, 2024, with fact discovery closing on April 17, 2024, and expert discovery closing on May 29, 2024. Thus, the Related Litigation is in its early stages, and the investment in it has been minimal.

Under factor 4, there will not be complete overlap in the issues raised in the IPR and the Related Litigation. Although Petitioners challenge here all claims asserted in the Related Litigation, PO has asserted over 400 claims from seven patents in the Related Litigation – an amount that, both individually and collectively, far exceeds the number of claims that the district court will allow to be presented at trial. See https://txed.uscourts.gov/?q=model-order-focusing-patent-claims-and-prior-art-reduce-costs. (Model Order limiting patentees to a "Final Election of Asserted Claims, which shall identify no more than five asserted claims per patent from among the ten previously identified claims and no more than a total of 16 claims"). Given that the patentee will likely be limited to only

five claims from the ‘895 patent (at most), it is highly unlikely the district court will be addressing the validity of all of the claims challenged by this Petition.

Under factor 5, Petitioner Ericsson is not a defendant, while Petitioner Verizon Wireless is a defendant in the Related Litigation. Ericsson is a supplier to multiple other customers not involved in the Related Litigation and thus has an independent basis to seek review of the ’895 Patent, separate and apart from the liability at issue in the Related Litigation. Thus, at least one of the parties is not the same party under *Sotera*. Therefore, this factor favors institution.

Under factor 6, other circumstances weigh in favor of institution. Here, the merits of the Petition are particularly strong. For example, Lastinger is directed at the same problem and proposes the same solution as the ’895 Patent, and discloses identical architecture and the identical concepts disclosed in the ‘895 Patent, demonstrating that the Petition is particularly strong in the underlying merits.

When viewed holistically, the timing of the present Petition is reasonable, there has been relatively limited investment in the Related Litigation, and there is minimal overlap between the present IPR and the Related Litigation. Coupling these *Fintiv* considerations with the compelling evidence of unpatentability presented in the Petition, the efficiency and integrity of the IPR process is best served by instituting review.

IX. Mandatory Notices Under 37 C.F.R. §42.8

A. Real Party-in-Interest (37 C.F.R. § 42.8(b)(1))

The real party-in-interest in this Petition is Ericsson Inc. and corporate parent Telefonaktiebolaget LM Ericsson and Cellco Partnership d/b/a Verizon Wireless. No other parties have directed, funded, or controlled the filing of this IPR, and this IPR was not filed at the behest of any other party.

Additionally, out of an abundance of caution in light of prior challenges to the named real parties-in-interest in separate and unrelated IPR petitions, Verizon Wireless further identifies Verizon Communications Inc. and Verizon Corporate Resources Group LLC as real parties-in-interest for the IPR requested by this Petition, solely to the extent that Patent Owner contends that these separate legal entities should be named real parties-in-interest in the requested IPR, and Verizon Wireless does so to avoid the potential expenditure of resources to resolve such a challenge. Also, Verizon Wireless notes that Verizon Wireless has several hundred affiliated entities and each of these entities agrees to be estopped under the provisions of 35 U.S.C. §315 as a result of any final written decision in the requested IPR to the same extent that Petitioner is estopped.

B. Related Matters (37 C.F.R. § 42.8(b)(2))

1. Judicial Matters

As of the filing date of this Petition and to the best knowledge of Petitioners, the ’895 Patent is involved in the following litigations:

Woodbury Wireless LLC v. Verizon Communications, Inc. et al. U.S.D.C. EDTX Case No. 2:22-cv- 00483-JRG (the "Related Litigation").

2. Administrative Matters:

As of the filing date of this Petition and to the best knowledge of Petitioners, the '895 Patent was not subject to any administrative matters.

3. Related Patents

See EX-1016.

C. Lead/Back-up Counsel (37 C.F.R. § 42.8(b)(3)):

Lead Counsel: Patrick D. McPherson, USPTO Reg. No. 46,255 DUANE MORRIS LLP, 901 New York Ave. NW Suite 700 East, Washington, D.C. 20001 P: (202) 776-5214; PDMcPherson@duanemorris.com
Back-Up Counsel: Kevin Anderson, USPTO Reg. No. 43,471 DUANE MORRIS LLP, 901 New York Ave. NW Suite 700 East, Washington, D.C. 20001 P: (202) 776-5213; KPAnderson@duanemorris.com

D. Notice of Service Information (37 C.F.R. § 42.8(b)(4)):

Please direct all correspondence to lead and back-up counsel at the above addresses. Petitioners consent to electronic service at the email addresses above.

X. CONCLUSION

Petitioners requests the Board institute *inter partes* review and cancel all Challenged Claims.

Respectfully submitted,

DUANE MORRIS LLP

BY: /Patrick D. McPherson/

Patrick D. McPherson
USPTO Reg. No. 46,255
Duane Morris LLP
505 9th Street NW, Suite 1000
Washington, D.C. 20004

Dated: October 6, 2023

CERTIFICATION OF SERVICE ON PATENT OWNER

Pursuant to 37 C.F.R. §§ 42.6(e), 42.8(b)(4) and 42.105, the undersigned certifies that on the 6th of October, 2023, a complete and entire copy of this Petition for *Inter Partes* Review of U.S. Patent No. 10,211,895 and all supporting exhibits were served via Federal Express, postage prepaid, to the correspondence address of record for the '895 Patent:

Thomas D. Fortenberry, Attorney at Law
P.O. Box 2099
Woodville, TX 75979

/Patrick D. McPherson/

Patrick D. McPherson, Reg. No. 46,255
505 9th Street, N.W., Suite 1000
Washington, D.C. 20004
P: (202) 776-7800
F: (202) 776-7801
PDMcPherson@duanemorris.com

ATTORNEY FOR PETITIONERS

CERTIFICATE OF COMPLIANCE

Pursuant to 37 C.F.R. § 42.24 *et seq*., the undersigned certifies that this document complies with the type-volume limitations. This document contains 13,886 words as calculated by the "Word Count" feature of Microsoft Word 2010, the word processing program used to create it.

Dated: October 6, 2023

By: Patrick D. McPherson

Patrick D. McPherson
Reg. No. 46,255
Duane Morris LLP
505 9th Street, N.W., Suite 1000
Washington D.C., 20004
P: (202) 776-7800
F: (202) 776-7801
PDMcPherson@duanemorris.com