US 20040123201A1

(19) United States
(12) Patent Application Publication
Nguyen et al.
(10) Pub. No.: US 2004/0123201 A1
(43) Pub. Date: Jun. 24, 2004

(54) ON-DIE MECHANISM FOR HIGH-RELIABILITY PROCESSOR

(76) Inventors: **Hang T. Nguyen**, Tempe, AZ (US); **Steven J. Tu**, Phoenix, AZ (US); **Alexander J. Honcharik**, Holden, MA (US); **Sujat Jamil**, Chandler, AZ (US)

Correspondence Address:
Leo V. Novakoski
BLAKELY, SOKOLOFF, TAYLOR & ZAFMAN LLP
Seventh Floor
12400 Wilshire Boulevard
Los Angeles, CA 90025-1026 (US)

(21) Appl. No.: **10/324,957**

(22) Filed: **Dec. 19, 2002**

Publication Classification

(51) **Int. Cl.**[7] **G01R 31/28**; G06F 11/00
(52) **U.S. Cl.** **714/736**

(57) **ABSTRACT**

A processor includes first and second execution cores that operate in a redundant (FRC) mode, an FRC check unit to compare results from the first and second execution cores, and an error check unit to detect recoverable errors in the first and second cores. The error detector disables the FRC checker, responsive to detection of a recoverable error. A multi-mode embodiment of the processor implements a multi-core mode in addition to the FRC mode. An arbitration unit regulates access to resources shared by the first and second execution cores in multi-core mode. The FRC checker is located proximate to the arbitration unit in the multi-mode embodiment.

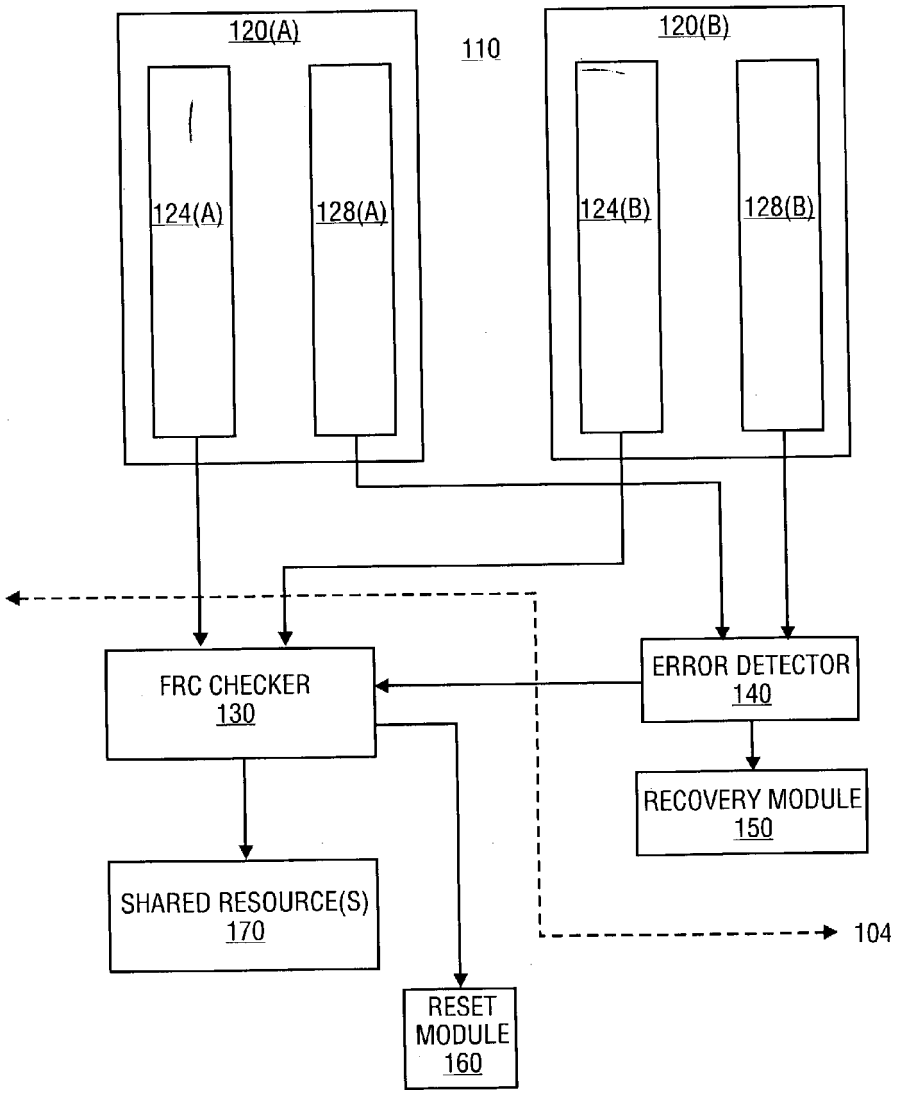

BMW and BOSCH EXHIBIT 1006

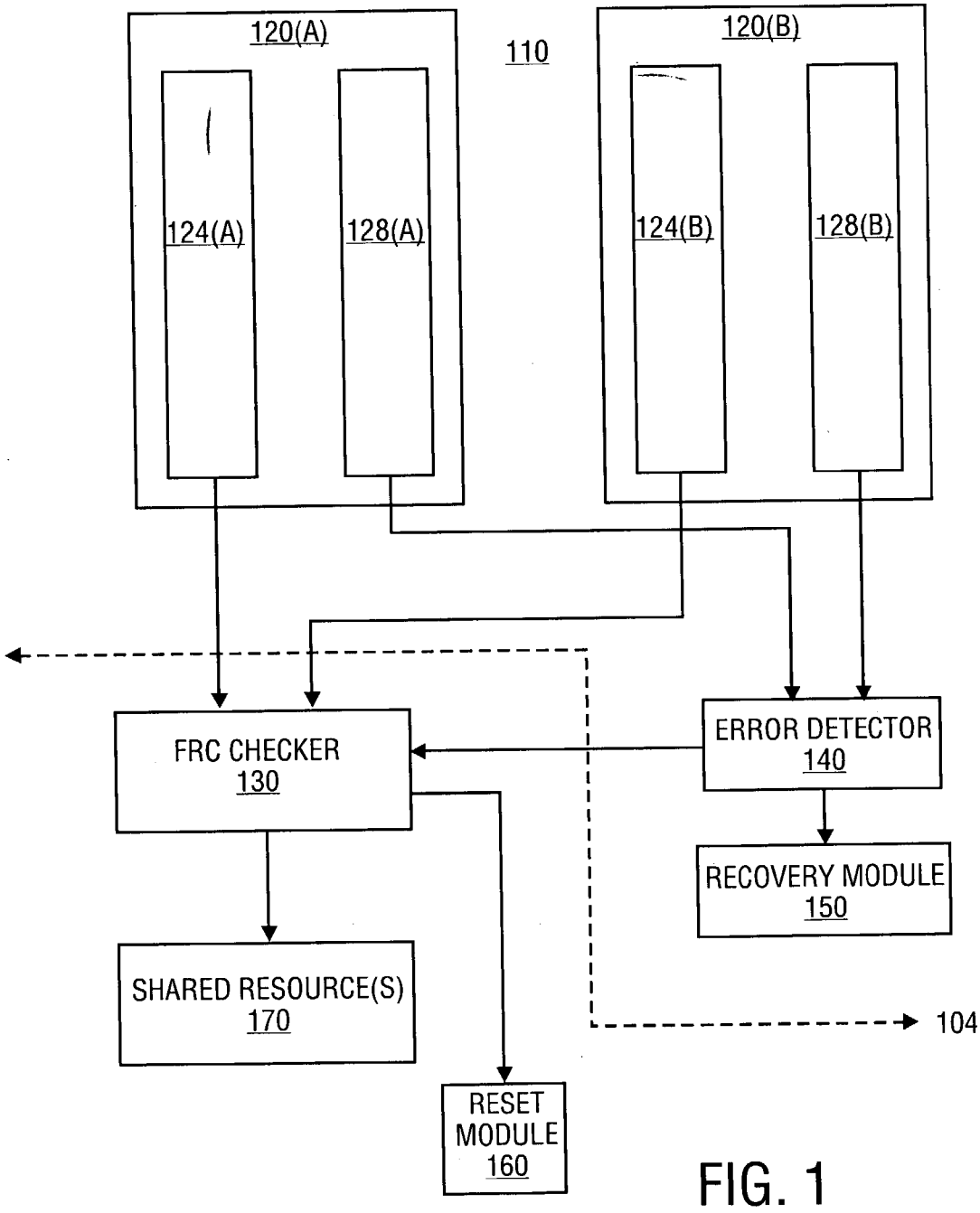
120(A)
110
120(B)
124(A)
128(A)
124(B)
128(B)
FRC CHECKER
130
ERROR DETECTOR
140
RECOVERY MODULE
150
SHARED RESOURCE(S)
170
104
RESET
MODULE
160

FIG. 1

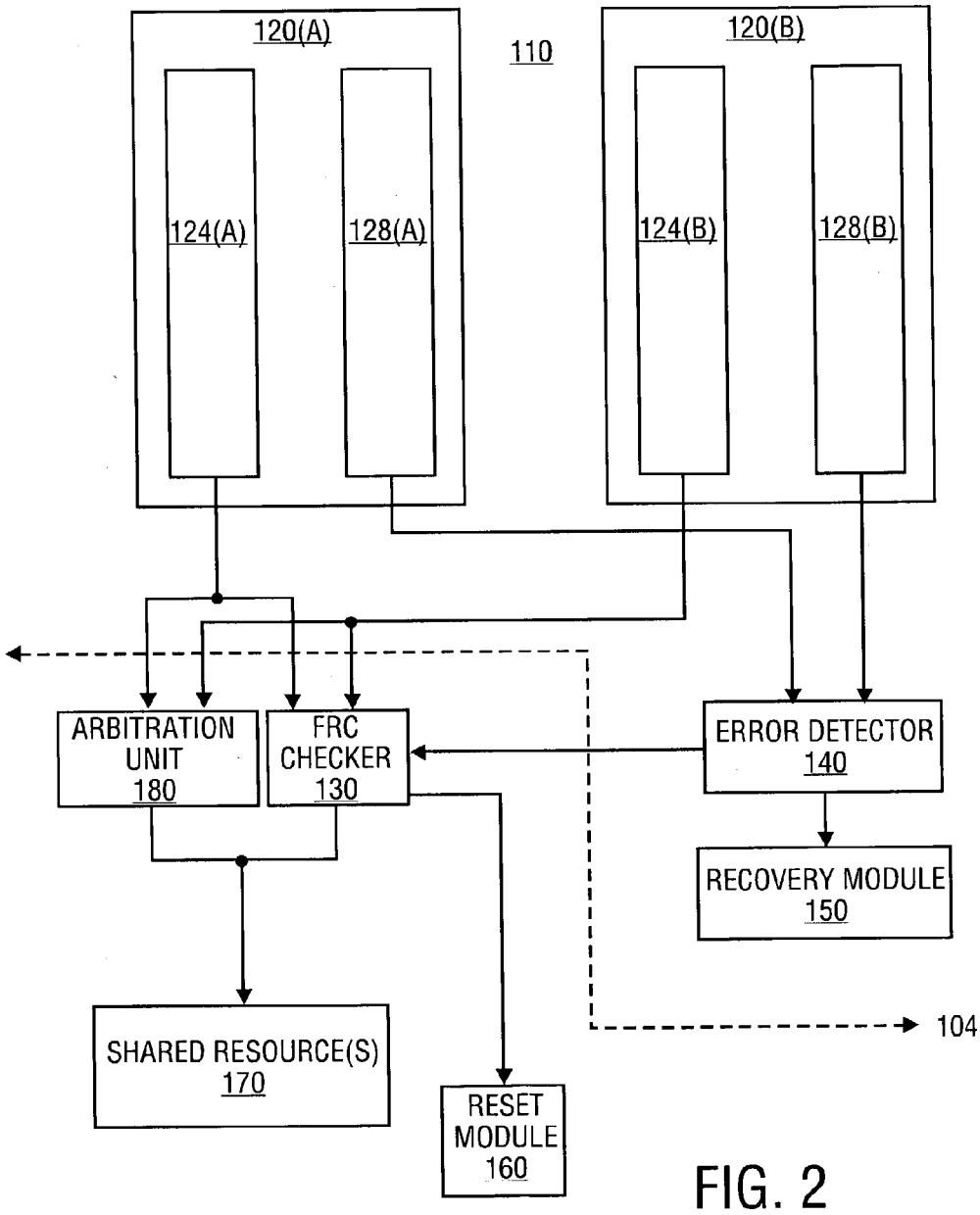
120(A)
110
120(B)
124(A)
128(A)
124(B)
128(B)
ARBITRATION UNIT 180
FRC CHECKER 130
ERROR DETECTOR 140
RECOVERY MODULE 150
SHARED RESOURCE(S) 170
RESET MODULE 160
104

FIG. 2

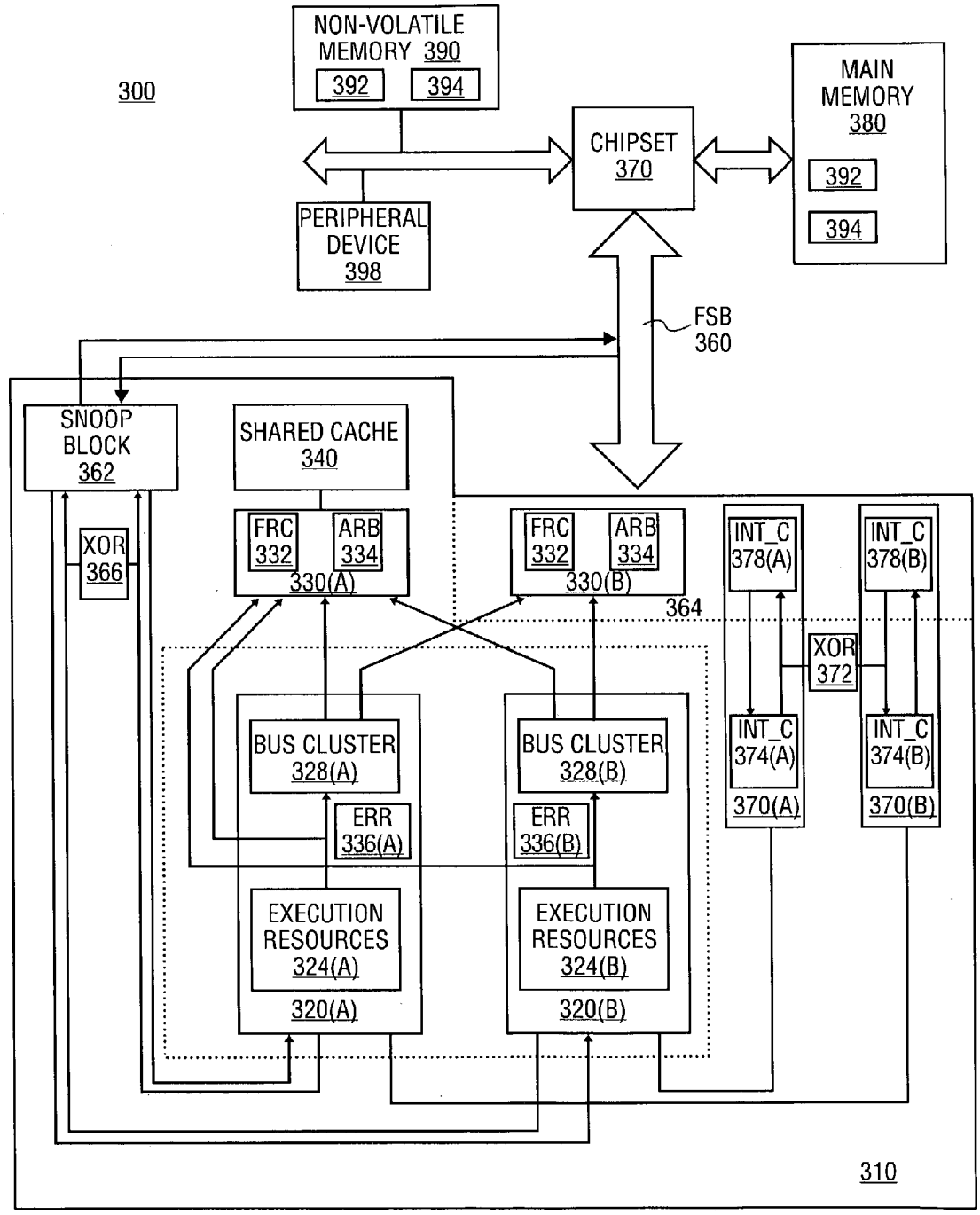
300
NON-VOLATILE MEMORY 390
392
394
PERIPHERAL DEVICE 398
CHIPSET 370
MAIN MEMORY 380
392
394
FSB 360
SNOOP BLOCK 362
SHARED CACHE 340
XOR 366
FRC 332
ARB 334
330(A)
FRC 332
ARB 334
330(B)
364
INT_C 378(A)
INT_C 378(B)
XOR 372
INT_C 374(A)
INT_C 374(B)
370(A)
370(B)
BUS CLUSTER 328(A)
ERR 336(A)
EXECUTION RESOURCES 324(A)
320(A)
BUS CLUSTER 328(B)
ERR 336(B)
EXECUTION RESOURCES 324(B)
320(B)
310

FIG. 3A

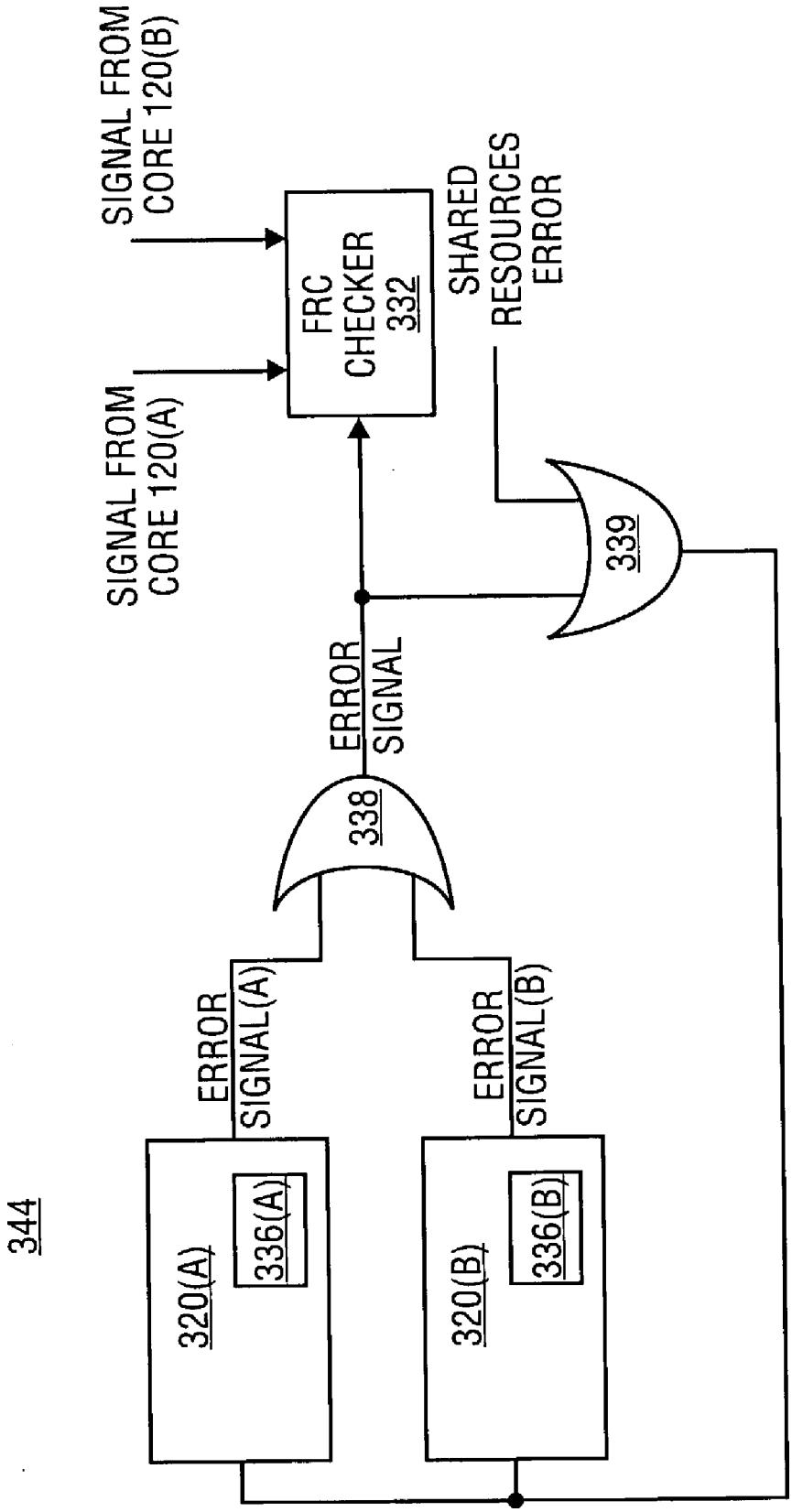
344
320(A)
336(A)
ERROR SIGNAL(A)
320(B)
336(B)
ERROR SIGNAL(B)
338
ERROR SIGNAL
SIGNAL FROM CORE 120(A)
SIGNAL FROM CORE 120(B)
FRC CHECKER 332
SHARED RESOURCES ERROR
339

FIG. 3B

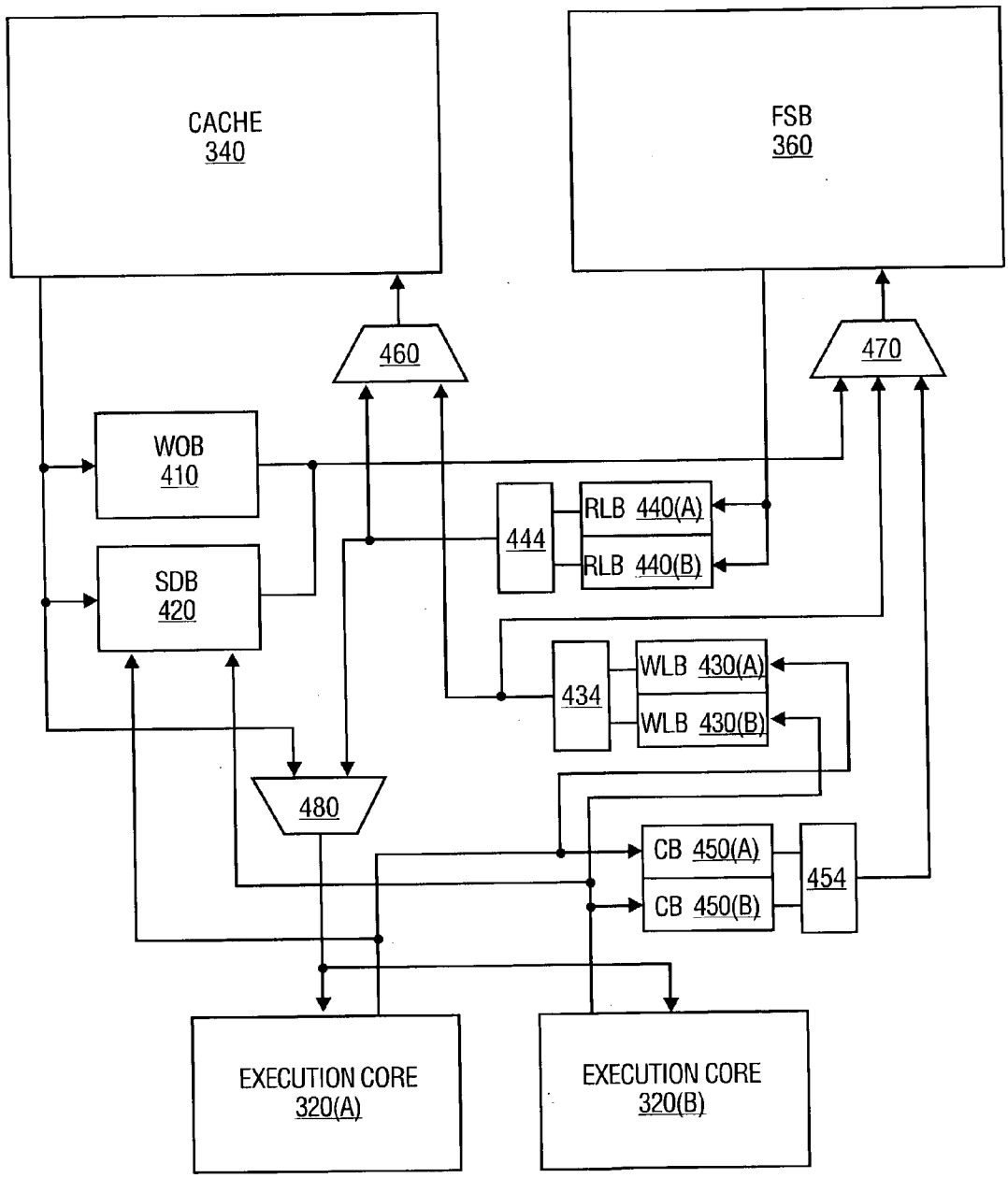
CACHE
340
FSB
360
460
470
WOB
410
SDB
420
444
RLB 440(A)
RLB 440(B)
434
WLB 430(A)
WLB 430(B)
480
CB 450(A)
CB 450(B)
454
EXECUTION CORE
320(A)
EXECUTION CORE
320(B)

FIG. 4

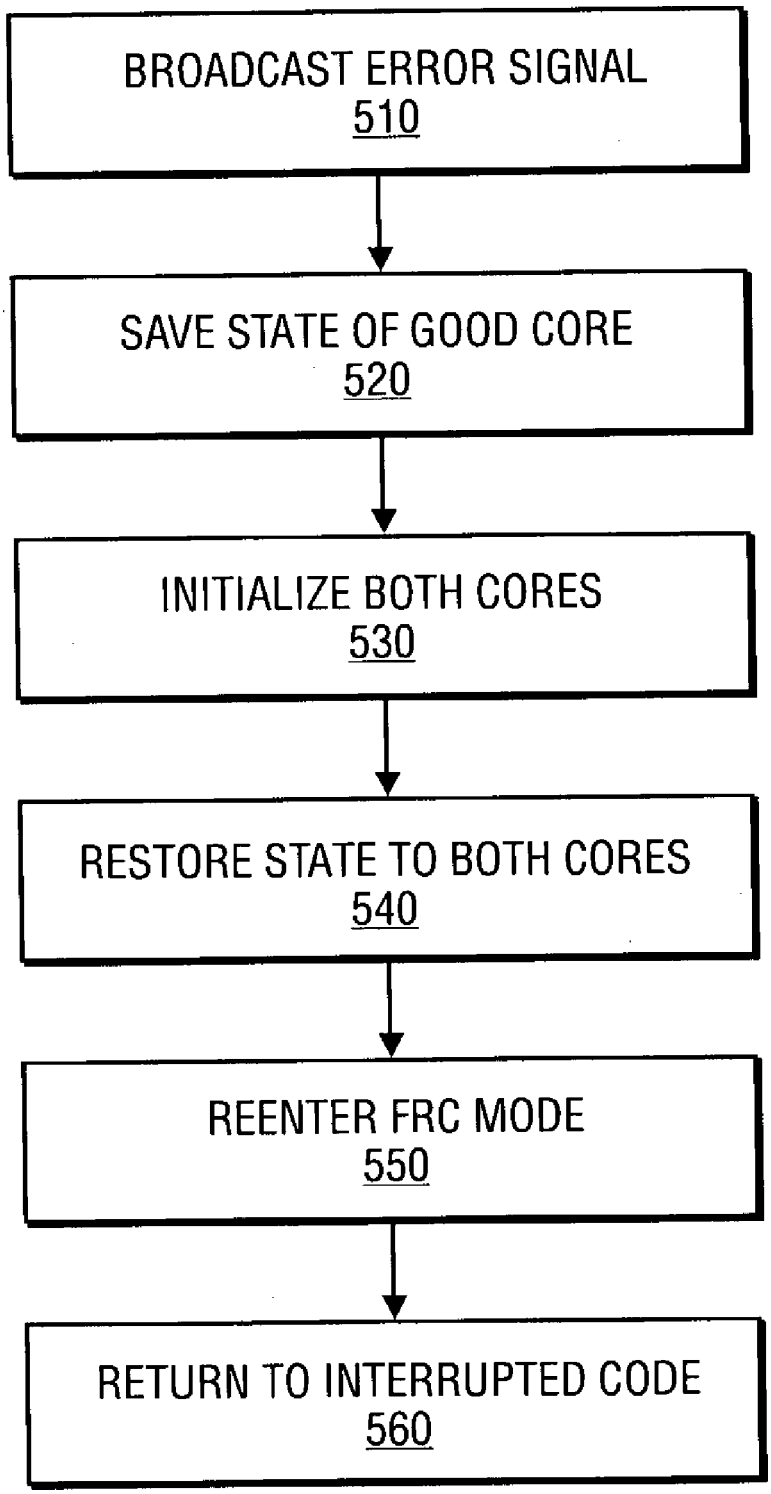
BROADCAST ERROR SIGNAL
510
SAVE STATE OF GOOD CORE
520
INITIALIZE BOTH CORES
530
RESTORE STATE TO BOTH CORES
540
REENTER FRC MODE
550
RETURN TO INTERRUPTED CODE
560

FIG. 5

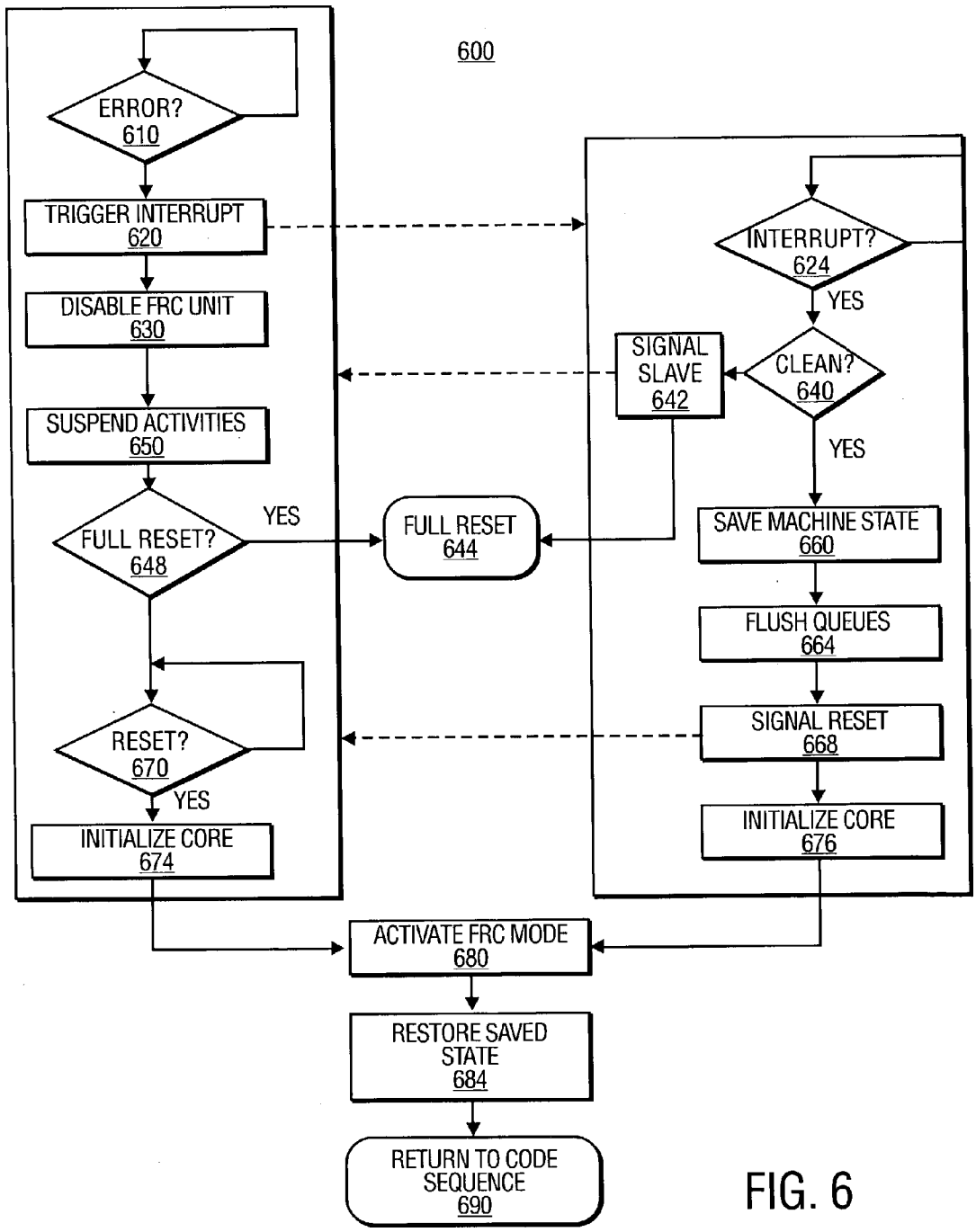
600
ERROR?
610
TRIGGER INTERRUPT
620
DISABLE FRC UNIT
630
SUSPEND ACTIVITIES
650
FULL RESET?
648
YES
RESET?
670
YES
INITIALIZE CORE
674
FULL RESET
644
INTERRUPT?
624
YES
SIGNAL SLAVE
642
CLEAN?
640
YES
SAVE MACHINE STATE
660
FLUSH QUEUES
664
SIGNAL RESET
668
INITIALIZE CORE
676
ACTIVATE FRC MODE
680
RESTORE SAVED STATE
684
RETURN TO CODE SEQUENCE
690

FIG. 6

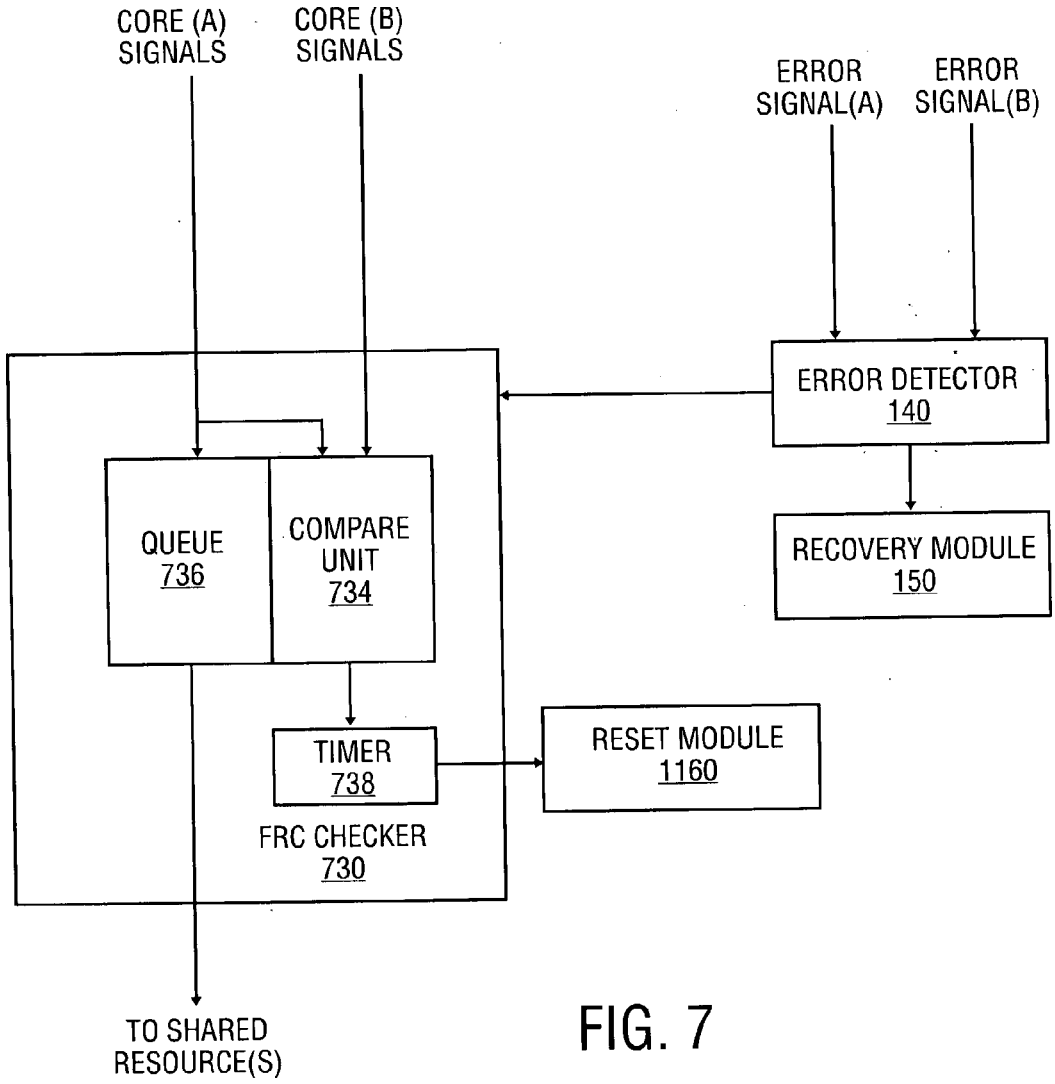
CORE (A) SIGNALS
CORE (B) SIGNALS
ERROR SIGNAL(A)
ERROR SIGNAL(B)
ERROR DETECTOR 140
RECOVERY MODULE 150
QUEUE 736
COMPARE UNIT 734
TIMER 738
RESET MODULE 1160
FRC CHECKER 730
TO SHARED RESOURCE(S)

FIG. 7

ON-DIE MECHANISM FOR HIGH-RELIABILITY PROCESSOR

BACKGROUND OF THE INVENTION

[0001] 1. Technical Field

[0002] The present invention relates to microprocessors and, in particular, to mechanisms for handling errors in FRC-enabled processors.

[0003] 2. Background Art

[0004] Servers and other high-end computing and communication systems are designed to provide high levels of reliability and availability. Soft errors pose a major challenge to both of these properties. Soft errors result from collisions between high-energy particles, e.g. alpha particles, and charge storing nodes. They are prevalent in storage arrays, such as caches, TLBs, and the like, which include large numbers of charge storing nodes. They also occur in random state elements and logic. Rates of occurrence of soft errors (soft error rates or SERs) will likely increase as device geometry decreases and device densities increase.

[0005] Highly reliable systems include safeguards to detect and manage soft errors, before they lead to silent, e.g. undetected, data corruption (SDC). However, to the extent error detection/handling mechanisms that support high-reliability operations take a system away from its normal operations, the system's availability is reduced. For example, one such mechanism resets the system to its last known valid state if an error is detected. The system is unavailable to carry out its assigned task while it is engaged in the reset operation.

[0006] One well-known mechanism for detecting soft errors is functional redundancy checking (FRC). A single processor enabled for FRC may include replicated instruction execution cores on which the same instruction code is run. Depending on the particular embodiment, each replicated execution core may include one or more caches, register files and supporting resources in addition to the basic execution units (integer, floating point, load store, etc.). FRC-hardware compares results generated by each core, and if a discrepancy is detected, the FRC system passes control to an error-handling routine. The point(s) at which results from different execution cores are compared represents the FRC-boundary for the system. Errors that are not detected at the FRC boundary can lead to SDC.

[0007] Since FRC errors indicate only that the execution cores disagree on a result, FRC errors are detectable but not recoverable. As noted above, the FRC error handling routine typically resets the system to the last known point of reliable data. This reset mechanism is relatively time consuming. It takes the system away from its normal operations, reducing system availability.

[0008] FRC is only one mechanism for handling soft errors, and for random logic and random state elements, it is the primary mechanism. Array structures present a different picture. Array structures typically include parity and/or ECC hardware, which detect soft errors by examining properties of the data. In many cases, the system can correct errors created by data corruption using relatively fast hardware or software mechanisms. However, for FRC-enabled processors, such errors are likely to be manifested as FRC errors, since they take the execution cores out of lock-step. Handling these otherwise recoverable errors through a reset mechanism reduces system availability.

[0009] The present invention addresses mechanisms for combining recoverable and non-recoverable error handling mechanisms efficiently in FRC-enabled processors.

BRIEF DESCRIPTION OF THE DRAWINGS

[0010] The present invention may be understood with reference to the following drawings, in which like elements are indicated by like numbers. These drawings are provided to illustrate selected embodiments of the present invention and are not intended to limit the scope of the invention.

[0011] **FIG. 1** is a block diagram of a processor including dual execution cores and FRC-detection and handling logic.

[0012] **FIG. 2** is a block diagram of an embodiment of the processor of **FIG. 1** that is capable of operating in multiple modes.

[0013] **FIG. 3A** is a block diagram of one embodiment of a computing system that implements the multi mode processor of **FIG. 2**.

[0014] **FIG. 3B** is a block diagram of a mechanism for signaling recoverable errors in the computing system of **FIG. 3A**.

[0015] **FIG. 4** is a block diagram representing the data paths of the computing system of **FIG. 3A**.

[0016] **FIG. 5** is a flowchart representing one embodiment of a mechanism for recovering from soft error in an execution core.

[0017] **FIG. 6** is a flowchart representing one embodiment of a mechanism for recovering from a soft error in a multi execution core processor.

[0018] **FIG. 7** is a block diagram representing one embodiment of an FRC checker that mitigates race conditions between recoverable and non-recoverable error mechanisms.

DETAILED DESCRIPTION OF THE INVENTION

[0019] The following discussion sets forth numerous specific details to provide a thorough understanding of the invention. However, those of ordinary skill in the art, having the benefit of this disclosure, will appreciate that the invention may be practiced without these specific details. In addition, various well-known methods, procedures, components, and circuits have not been described in detail in order to focus attention on the features of the present invention. For example, aspects of the present invention are illustrated using a dual-core processor, but persons skilled in the art will recognize that more than two cores may be used with appropriate modifications of the reset and recovery mechanisms.

[0020] **FIG. 1** is a block diagram representing one embodiment of an FRC-enabled processor **110** in accordance with the present invention. Processor **110** includes first and second execution cores **120**(*a*), **120**(*b*) (generically, execution core **120**), an FRC checker **130**, an error detector

140, a recovery module **150**, a reset module **160**, and shared resources **170**. A portion of the FRC-boundary is indicated by dashed line **104**. For purposes of illustration, recovery module **150** and reset module **160** are shown as part of processor **110**. These modules may be implemented in whole or in part as hardware, firmware or software and located on or off of the processor die. Similarly, shared resources **170** may include components that are on the processor die as well as components that are on one or more different die.

[**0021**] Each execution core **120** includes a data pipeline **124** and an error pipeline **128** that feed into FRC checker **130** and error detector **140**, respectively. Data pipeline **124** represents the logic that operates on various types of data as it moves through processor **110** toward FRC checker **130**. Data processed by data pipeline **124** may include result operands, status flags, addresses, instructions and the like that are generated and staged through processor **110** during code execution. Error pipeline **128** represents the logic that operates on various types of data to detect errors in the data and provide appropriate signals to error detector **140**. For example, the signals may be one or more bits (flags) representing the parity or ECC status of data retrieved from various storage arrays (not shown) of processor **110**. Soft errors in these arrays may appear as parity or ECC error flags when the corrupted data is accessed.

[**0022**] If an error reaches error detector **140** from either core **120**, recovery module **150** is activated to implement a recovery routine. Recovery can be implemented with relatively low latency by hardware, software, firmware or some combination of these. For example, there is an extremely small probability that data is corrupted in both execution cores **120** at the same (or nearly the same) time. This leaves an uncorrupted copy of the data available to restore data integrity to processor **110**. However, an FRC error will be triggered if the corrupted data from one execution core and an uncorrupted version of the data from the other execution are allowed to reach FRC checker **130** before recovery module **150** is activated. Since FRC errors are not recoverable, reset module **160** resets the system, if FRC checker **130** signals an FRC error before the underlying parity/ECC error is detected.

[**0023**] Not all FRC-errors are traceable to underlying parity/ECC or other correctible soft errors. For those that are, it is faster for error detector **140** to address the underlying soft error than for FRC-checker to address the FRC error that results when the corrupted data reaches FRC boundary **104**. As noted above, the reset process has a significantly longer latency than the recovery process, and it is to be avoided if the error can be corrected by recovery module **150**. In addition, reset usually brings the entire system down, whereas recovery only results in a temporary performance loss. For this reason, FRC checker **130** is temporarily disabled if error detector **140** detects an error in either error pipeline **128**, since execution cores **120** are no longer in lock step.

[**0024**] Execution cores **120** operate in lock step during normal FRC mode, but data pipeline **124** and error pipeline **128** may operate relatively independently. For example, ECC hardware is relatively complex and, consequently, relatively slow, especially for 2-bit errors. A flag signaling such an error may reach error detector **140** before, after, at the same time as the data with which it is associated reaches FRC checker **130**. This flexibility is generally beneficial. For example, it allows data to be used speculatively before its error status is determined. Since soft errors are relatively rare, and error pipeline **128** is generally as fast as data pipeline **124**, this flexibility is net positive. As long as the error flag arrives at error detector **140** in time to disable FRC checker **130** before it acts on a mismatch attributable to the corrupted data, the relatively low latency recovery routine is engaged.

[**0025**] As discussed below, processor **110** may implement strategies to mitigate the race between recoverable and non-recoverable error mechanisms. For example, a streamlined signaling mechanism may be used in FRC mode to speed disabling of FRC checker **130** in the event of a non-FRC error. In addition, FRC errors may be delayed for an interval prior to reset, in case a late arriving recoverable error signal obviates the need for reset.

[**0026**] For one embodiment of the invention, processor **110** is capable of operating in a high reliability (e.g. FRC) mode or a high performance (e.g. multi-core) mode. The operating mode may be selected, for example, when a computing system that includes processor **110** is booted or reset. In FRC mode, execution cores **120**(*a*) and **120**(*b*) may appear to the operating system as a single logical processor. Execution cores **120**(*a*) and **120**(*b*) process the same code sequence, and the results generated are compared by FRC checker **130**. If the results agree, a machine state corresponding to the code sequence is updated.

[**0027**] In FRC mode, one of execution cores **120** may be designated as the master. The master refers to the execution core that is responsible for updating the resources shared by execution cores **120**. The other execution core **120** may be designated as the slave. The slave is responsible for generating results from the same code sequence to be checked against those of the master. Since an error may occur in either the master or slave, embodiments of the present invention allow the master/slave designation to be changed dynamically. As discussed below, this allows the slave to take over the master designation to implement recovery if a recoverable error is detected in the execution core that is currently designated as master.

[**0028**] In multi-core mode, execution cores **120**(*a*) and **120**(*b*) may appear to the operating system as two different logical processors on a single processor die. In this mode, execution cores **120**(*a*) and **120**(*b*) process different code sequences, and each updates a machine state associated with the code sequence it processes. Portions of the machine state of a logical processor may be stored in a cache and/or register associated with the corresponding execution core. At some point(s) on the processor die, results from execution cores **120**(*a*) and **120**(*b*) are routed to shared resource(s) **170** for, e.g., storage (cache) or transmission off of the processor die (bus). For this embodiment, additional logic is provided to mediate access to shared resources **170** by execution cores **120**(*a*) and **120**(*b*). In general, multi-core mode allows the execution cores of the processor to be controlled separately.

[**0029**] **FIG. 2** is a block diagram representing an embodiment of processor **110** that is capable of operating in multiple modes, e.g. FRC mode and multi-core mode. For the disclosed embodiment, an arbitration unit **180** is provided to manage transactions to shared resources **170** by execution cores **120**(*a*) and **120**(*b*), when processor **110**

operates in multi-core mode. Arbitration unit **180** is associated with FRC unit **130**, placing the arbitration point for multi-core mode operation proximate to the FRC boundary for FRC mode operation. In multi-core mode, signals from execution cores **120**, e.g. transaction request signals, may be processed by arbitration unit **180**, which manages access to shared resource(s) **170**. In FRC mode, signals from execution cores **120** may be processed by FRC checker **130**, which compares them to detect soft errors in either execution core. Locating FRC checker **130** and arbitration unit **180** in close proximity expands the FRC boundary to encompass most, if not all, of the logic for which signals from the two execution cores remain distinct. It also reduces the wiring necessary to support processor **110** in FRC and multi-core modes.

[**0030**] Expansion of the FRC boundary in this manner naturally increases the time necessary to propagate signals to FRC checker **130**. This increased "flight time" provides more time for a parity or ECC error to reach detector **140**, which increases the opportunity for error recovery. As noted above, the recovery routine triggered by error detector **140** provides greater system availability than the reset routine triggered by FRC checker **130**. Expanding the FRC boundary thus increases both the amount of logic that is duplicated for execution cores **120** and the flight time, during which detectable errors may be identified. The former increases FRC protection, albeit through a reset mechanism. The latter increases the likelihood that errors identifiable through parity, ECC or similar core-specific protections are handled through recovery rather than reset.

[**0031**] **FIG. 3A** is a block diagram representing one embodiment of a computing system **300** in accordance with the present invention. The disclosed embodiment of system **300** includes a processor **310**, chipset **370**, main memory **380**, non-volatile memory **390** and peripheral device(s) **398**. For the disclosed embodiment of system **300**, processor **310** may be operated in FRC mode or in multi-core mode. The mode may be selected, e.g., when computing system **300** is booted or reset. Chipset **370** manages communications among processor **310**, main memory **380**, non-volatile memory **390** and peripheral devices **398**.

[**0032**] Processor **310** includes first and second execution cores **320**(*a*) and **320**(*b*), respectively (generically, execution cores **320**). Each execution core includes execution resources **324** and a bus cluster **328**. Execution resources **324** may include, for example, one or more integer, floating point, load/store, and branch execution units, as well as register files and cache(s) to supply them with data (e.g. instructions, operands, addresses). Bus cluster **328** represents logic for managing transactions to a cache **340** that is shared by execution cores **320**(*a*) and **320**(*b*), as well as to a front side bus **360**, for those transactions that may miss in shared cache **340**. Resources corresponding to the error pipeline of **FIGS. 1 and 2** may be associated with execution resources **324** and/or bus cluster **328**.

[**0033**] Interface units (IFU) **330**(*a*), **330**(*b*) (generically, IFU **330**) represent a boundary between execution cores **320** and shared resources, cache **340** and FSB **360**. The disclosed embodiment of IFU **330** includes an FRC unit **332** and an arbitration unit **334**. As noted above, FRC unit **332** and arbitration unit **334** receive signals from execution cores **320**, and locating them proximate to each other results in significant savings of wiring on the processor die. Also shown in **FIG. 3A** are error units **336**(*a*) and **336**(*b*), which include components to monitor for detectable errors in execution cores **320**(*a*) and **320**(*b*).

[**0034**] For FRC mode, FRC unit **332** compares signals from execution cores **320** for transactions to shared resources like cache **340** and FSB **360**. FRC unit **332** thus forms part of the FRC boundary of processor **310**. For multi-core mode, arbitration unit **334** monitors signals from execution cores **320** and grants access to its associated shared resource according to an arbitration algorithm. The arbitration algorithm implemented by arbitration unit **334** may be, for example, a round robin scheme, a priority-based scheme or similar arbitration algorithms. For both FRC and multi-core mode, error unit **336** may monitor signals from execution cores **320** for recoverable errors.

[**0035**] Portions of recovery module **150** and reset module **160** (**FIG. 2**) may be located on processor **310** or elsewhere in system **300**. For one embodiment, a recovery routine **392** and a reset routine **394** may be stored in non-volatile memory **390** and images of these routines may be loaded in main memory **380** for execution. For this embodiment, recovery module **150** and reset module **160** may include pointers to recovery routine **392** and reset-routine **394**, respectively (or their images in main memory **380**).

[**0036**] The disclosed embodiment of system **300** also includes interrupt controllers **370**(*a*) and **370**(*b*) (generically, interrupt controller(s) **370**) to process interrupts for execution cores **320**(*a*) and **320**(*b*), respectively. Each interrupt controller **370** is shown having first and second components **374** and **378**, respectively, to accommodate the different clock domains in which interrupt controller **370** may operate. For example, FSB **360** typically operates at a different frequency than processor **310**. Consequently, components of processor **310** that interact directly with FSB **360** typically operate in its clock domain, which is indicated as area **364** on processor **310**.

[**0037**] The disclosed embodiment of interrupt controller **370** also includes an FRC-boundary-like component in the form of XOR **372**. XOR **372** signals an FRC error if it detects a mismatch between outgoing signals, e.g. interrupt responses, of components **374**(*a*) and **374**(*b*) from execution cores **320**(*a*) and **320**(*b*). Errors attributable to interrupt controllers **370** may still arise, however, from soft errors in components **378**(*a*), **378**(*b*) in FSB clock domain **364**. These error may be detected by the discrepancies they introduce between the subsequent operations of execution cores **320**(*a*) and **320**(*b*).

[**0038**] For the disclosed embodiment of system **300**, a common snoop block **362** processes snoop transactions to and from execution cores **320**(*a*) and **320**(*b*). XOR **366** provides FRC-checking on snoop responses from execution cores **320**(*a*), **320**(*b*) and signals an error if a mismatch is detected. XORs **372** and **366** may be disabled if processor **310** is operating in multi-core mode.

[**0039**] **FIG. 3B** is a block diagram representing one embodiment of an apparatus **344** for broadcasting-recoverable error conditions to components of computing system **300**. For example, error units **336**(*a*) and **336**(*b*) may represent ECC or parity error detection logic for various arrays (register, caches, buffers, etc) of execution cores **320**(*a*) and **320**(*b*), respectively, and/or exception logic to handle these

errors. An OR gate **338** monitors error signals from execution cores **320** and asserts a signal to disable FRC unit **332** if either error signal is asserted. The error signal may be a high level interrupt, such as the machine check abort (MCA) defined for Itanium® processors. The output of OR gate **338** is also fed back to execution cores **320** to indicate to the error-free execution core that a recovery mechanism is to be initiated. A second OR gate **339** is provided to transfer error signals to execution cores **320** from the shared resources.

[**0040**] If the error signal does not disable FRC unit **332** the corrupted data triggers an FRC error, and an otherwise recoverable error is treated as a non-recoverable, e.g. FRC, error. That is, the system goes through a reset operation rather than a shorter recovery operation. Depending on the particular implementation of the system, there may be a number of cases in which the race to FRC unit **332** between the error signal and the mismatched data signals from the execution cores (created by the recoverable error) is close. For this reason, apparatus **344** may include a mechanism to accelerate error signal propagation, at least in FRC mode.

[**0041**] For one embodiment, apparatus **334** supports a high level interrupt such as an MCA that operates in both FRC and high performance modes. In high performance mode, the error signal is subject to pipeline stalls, e.g., in the front end of the execution core or in the L2 cache. This ensures that no unnecessary MCAs are taken, since the event that triggered the stall may make the error signal moot. In FRC mode, the error signal bypasses these stalls. Bypassing stalls in FRC may result in the processing of some unnecessary error signals, but it also reduces the probability that an FRC error is triggered before the (non-FRC) error signal disables FRC unit **332**. As discussed in conjunction with **FIG. 7**, embodiments of processor **110** may also include a hardware mechanism to mitigate the race between the error signal and the core signals that reflect the corrupted data.

[**0042**] **FIG. 4** is a block diagram representing data paths for one embodiment of computing system **310**, including FRC components to support processor **310** in FRC mode. For the disclosed embodiment, cache **340**, FSB **360** and execution cores **320** are coupled through a series of buffers. For example, a write-out buffer (WOB) **410** stages data evicted from cache **340** to main memory **380**, and a snoop data buffer (SDB) **420** provides snoop data from execution cores **320** or cache **340** to FSB **360**, responsive to a snoop hit in these structures (Execution cores **320** may each have one or more levels of cache in addition to shared cache **340**).

[**0043**] A pair of write-line buffers (WLB) **430**(*a*), **430**(*b*) stage data from execution cores **320**(*a*), **320**(*b*), respectively, to cache **340** or FSB **360**, and a pair of read-line buffers **440**(*a*), **440**(*b*) stage data from FSB **360** to cache **340** or execution cores **320**. Coalescing buffers (CB) **450**(*a*), **450**(*b*) collect data to be written to memory **380** and forward it to FSB **360**, periodically. For example, multiple data writes to the same line of memory may be collected in CBs **450** before triggering a write transaction on FSB **360**.

[**0044**] For the disclosed embodiment, logic associated with these buffers provides the FRC-checking and data routing functions when processor **310** is operated in FRC mode. For example, logic block **454** represents MUX and XOR functions for data in CBs **450**(*a*), **450**(*b*). The XOR function provides FRC checking if processor **310** is operating in FRC mode. The MUX function provides data routing if processor is operating in multi-core mode. Logic blocks **434** and **444** provide similar functions for data in WLBs **430**(*a*), **430**(*b*) and RLBs **440**(*a*), **440**(*b*), respectively. MUXs **460**, **470** and **480** route data from different sources to cache **340**, FSB **360** and execution cores **320**.

[**0045**] As noted above, the recovery mechanism for errors detected within the FRC boundary may be handled by various combinations of hardware, software and firmware modules. One embodiment of the recovery mechanism employs code that is closely associated with the processor. For example, the Itanium® Processor Family of Intel® Corporation, employs a layer of firmware called the processor abstraction layer (PAL), which provides an abstraction of the processor to the rest of the computing system. Implementing recovery in the PAL hides the recovery process from system level code, such as the system abstraction layer (SAL), e.g. BIOS, and the operating system. PAL-based implementations of the recovery mechanism should be able to complete quickly enough to avoid triggering a time-out period enforced by the operating system. Recovery mechanisms may also be implemented using system level code, e.g. SAL/BIOS, or operating system code. The latter implementations may not be subject to the same time constraints as the PAL-based implementation. Unless otherwise noted, the recovery mechanisms discussed below may be implemented using code associated with any of the foregoing sources.

[**0046**] **FIG. 5** is a flowchart representing a mechanism for recovering from an error detected in one of the execution cores before it triggers an FRC reset. Responsive to a parity, ECC or other error detected in one of the execution cores, a signal is broadcast **510** to indicate the start of a recovery routine. As long as the error is detected before it triggers an FRC reset, the corrupted data can be localized to one of the execution cores, leaving the machine state data of the other execution core available for recovery. Accordingly, the machine state of the good core is saved **520**. To prepare the processor for recovery, both cores are initialized **530** to a specified condition, and the saved machine state is restored **540** to the initialized cores. FRC mode is then restored **550** and the processor returns **560** to the interrupted code.

[**0047**] For one embodiment of the invention, one of execution cores **120** may be designated as the master core and the other as the slave core when processor **10** is operating in FRC mode. For this embodiment, signals generated by the master and slave cores are compared at the FRC boundary to determine if reset is necessary. If no FRC reset is warranted, signals generated by the master core are transferred to shared resource(s) **170**, and signals generated by the slave core are dropped. For this embodiment, a bit in a status register of each execution core **120** may be used to indicate its status as master or slave. The bit may be set, for example, when the system is booted or reset. As discussed below in greater detail, the master/slave status of an execution may also be changed dynamically to allow recovery for an error in either core. For errors detected within the FRC boundary, e.g. recoverable errors, the actions of the master and slave core may differ, depending on which core generated the error.

[**0048**] **FIG. 6** is a flowchart representing one embodiment of a mechanism **600** for recovering from an error detected in an execution core designated as the slave execution core.

Operations of the slave execution core are shown on the left, and operations of the master execution core are shown on the right.

[0049] Routine **600** is initiated if the slave execution core detects **610** an error (parity, ECC, etc.). The slave core triggers **620** an interrupt to signal the error condition to other components of the computing system. For embodiments of routine **600** implemented by PAL or comparable processor-level code, broadcast of the interrupt signal may be limited to components within the processor chip, such as the master execution core. In addition to signaling the error, the slave execution core disables **630** the FRC unit and suspends its activities. Disabling the FRC unit prevents the error from triggering an FRC reset when it reaches the FRC boundary, and suspending activities in the slave core prevents it from disrupting the recovery process.

[0050] In response **624** to the interrupt, the master execution core determines **640** whether its state data contains any errors. For example, each execution core may include a status bit that is set if an error is detected. The master execution core may check this bit to determine if it has also generated an error. Except for the very rare case in which soft errors occur in both execution cores almost simultaneously, the master core is likely to be clean. If it is not clean **640**, there is no uncorrupted processor state with which to implement a recovery. In this case, the master core signals **642** a reset condition to the slave core and the computing system executes **644** a full, e.g. FRC-level, reset.

[0051] If the state data for the master core is not corrupted, the master core saves **660** its machine state and flushes **664** queues and buffers in its pipeline. For example, the master core may save the contents of its data and control registers and low-level cache(s) to a protected area of memory. The master core also signals **668** a limited reset to the slave core and sets **676** it resources to a specified state, e.g. initializes its pipeline. The slave core detects **670** the limited reset and initializes **674** its pipeline, synchronizing the states of the cores.

[0052] With the cores thus synchronized, FRC mode is reactivated **680**. This may be accomplished, for example, by having each core execute a handler routine, which sets appropriate state bits in its status/control registers. The saved state is restored **684** to both execution cores, and control is returned **690** to the interrupted code sequence.

[0053] Method **600** represents an embodiment of the recovery mechanism for the case in which the error is detected in the execution core that is currently designated as the slave core. For one embodiment, the slave core is the execution core that does not "control" the shared resource(s). For example, in FRC mode, signals from the slave execution core are dropped following comparison with those from the master execution core at the FRC boundary. If no FRC error is detected, signals from the master core are used to control the shared resources outside the FRC boundary.

[0054] If the error originates in the master core rather than the slave core, recovery may be handled by changing the master/slave designations of the execution cores. For example, master/slave designation may be indicated by the state of a bit in a status register associated with each execution core. The execution core for which this status bit is in the master state controls the shared resources, which are used to implement the state-saving operations of recovery routine **600**, e.g. operation **660**.

[0055] For one embodiment of the recovery routine, the execution core in which the error originates may check its master/slave status bit. If the status bit indicates it is the slave, method **600** may be implemented as described. If the status bit indicates it is the master, it may signal the slave to change its status to master, change its own status to slave, and suspend activities.

[0056] **FIG. 7** is a block diagram illustrating an embodiment of an FRC-checker **730** that mitigates race conditions between recoverable and non-recoverable error handling. The disclosed embodiment of FRC checker **730** includes a compare unit **734**, queue **736**, and timer unit **738**. Queue **736** receives data from execution core (a), and compare unit **734** compares the data from cores A and B, and sets a status flag to indicate if the comparison yields a match. If the data matches, the status flag is set to indicate the match.

[0057] If the data does not match, the status flag is set to indicate the mismatch and timer unit **738** is triggered to begin a countdown interval. If error detector **140** receives an error flag before the timeout interval expires, it disables FRC checker **730** and triggers recovery unit **150** to implement the recovery routine.

[0058] There has thus been disclosed a mechanism for handling recoverable and non-recoverable errors in multi-core processor. The multiple cores may be operated in FRC mode, in which case, one or more checker units compare signals from the cores to detect non-recoverable errors. In addition, each core includes an error unit to detect recoverable errors. If a recoverable error is detected, the checker units are disabled and a recovery routine is implemented. A multi-core mode embodiment of the multi-core processor may include an arbitration unit, proximate to the checker, to control access to the shared resource(s). Proximity of the FRC boundary to the shared resources increases the logic protected by the FRC boundary and reduces wiring necessary for the multi-core mode implementation.

[0059] Embodiments of the present invention detect virtually all errors that are undetected in non-FRC-enabled systems, and they support recovery of virtually all detectable errors, including those that are typically handled through reset in other FRC-enabled processors.

[0060] The disclosed embodiments have been provided to illustrate various features of the present invention. Persons skilled in the art of processor design, having the benefit of this disclosure, will recognize variations and modifications of the disclosed embodiments, which none the less fall within the spirit and scope of the appended claims.

We claim:

1. A processor comprising:

first and second execution cores to operate in an FRC mode;

a resource to process a transaction from at least one of the first and second execution cores; and

an interface control unit to regulate access to the resource by the first and second execution cores, the interface control unit including an FRC check unit to compare

transaction signals from the first and second execution cores and to signal an error if the comparison indicates a mismatch.

2. The processor of claim 1, further comprising an error detector to detect errors in the first and second execution cores and to disable the FRC checker responsive to detecting an error.

3. The processor of claim 2, wherein the error detector comprises first and second error detectors to detect errors in the first and second execution cores, respectively.

4. The processor of claim 3, wherein the first error detector triggers an error signal, responsive to an error in the first execution core, to disable the FRC check unit and to initiate a recovery procedure using the second execution core.

5. The processor of claim 4, wherein the second execution core is designated as an FRC slave and is re-designated as an FRC master, responsive to the error signal.

6. The processor of claim 5, wherein the second execution core saves its machine state data to a memory location, and executes a reset sequence.

7. The processor of claim 2, wherein the first and second execution cores may also operate in a multi-core mode and the interface control unit further comprises an arbitration unit to regulate access to the shared resource by the execution cores if they operate in multi-core mode.

8. The processor of claim 7, wherein the shared resource comprises a cache that may process transactions from both the first and second cores in multi-core mode and that may process transactions from only one of the first and second core in FRC mode.

9. The processor of claim 7, wherein, responsive to detecting an error the error detector triggers an interrupt if the processor is in multi-core mode and an accelerated interrupt if the processor is in FRC mode.

10. The processor of claim 9, wherein the accelerated interrupt bypasses portions of an execution core traversed by the interrupt in multi-core mode.

11. A system comprising:

a first memory location to store a recovery routine;

a second memory location to store a reset routine;

first and second execution cores capable of operating in an FRC mode;

an error unit to initiate the recovery routine responsive to detecting an error in one of the first and second execution cores; and

an FRC checker to initiate the reset routine responsive to detecting a mismatch between signals from the first and second execution cores.

12. The system of claim 11, wherein the error unit disables the FRC checker, responsive to detecting the error in one of the first and second execution cores.

13. The system of claim 12, wherein the reset routine includes instructions executable by the first and second execution cores to initialize the first and second execution cores in either a multi-core mode or the FRC mode.

14. The system of claim 13, further comprising a cache to be shared by the first and second execution cores if the first and second execution cores are initialized in multi-core mode.

15. The system of claim 14, further comprising an arbitration unit to manage access to the cache by the first and second execution cores in multi-core mode.

16. The system of claim 15, wherein the FRC checker monitors transaction signals to the arbitration unit from the first and second execution cores in FRC mode and initiates the reset routine responsive to a mismatch in the transaction signals.

17. The system of claim 11, wherein the first and second execution cores operate as master and slave, respectively, in an FRC mode.

18. The system of claim 17, wherein the first execution core is disabled and the second execution core operates as the master, responsive to an error in the first execution core.

19. The system of claim 11, wherein the first and second execution cores may be initialized in a multi-core mode or an FRC mode.

20. The system of claim 19, wherein the error unit triggers an interrupt to the first and second execution cores, responsive to an error in one of the execution cores.

21. The system of claim 20, wherein the interrupt is an accelerated interrupt if the execution cores are in FRC mode.

22. The system of claim 21, wherein the accelerated interrupt bypasses a portion of the execution core.

23. A method comprising:

operating first and second execution cores in an FRC mode;

monitoring data of the first and second execution cores for errors;

comparing signals generated by the first and second execution cores;

executing a recovery routine, responsive to an error in the first or second execution core; and

executing a reset routine, responsive to a mismatch between signals generated by the first and second execution cores.

24. The method of claim 23, further comprising suspending signal comparison responsive to the error in the first or second execution core.

25. The method of claim 24, wherein executing a reset routine responsive to the mismatch further comprises:

triggering a delay interval responsive to the mismatch;

executing the reset routine if no error is monitored in the execution cores before the delay interval expires.

26. The method of claim 25, further comprising executing the recovery routine if an error is detected in one of the execution cores before the delay interval expires.

27. The method of claim 23, wherein operating the first and second execution cores in an FRC mode comprises operating the first and second cores in the FRC mode or in a multi-core mode, responsive to a reset signal.

28. The method of claim 27, wherein executing the recovery routine comprises:

executing the recovery routine responsive to an error signaled by an interrupt if the cores are operating in multi-core mode; and

executing the recovery routine responsive to an error signaled by an accelerated interrupt if the cores are operating in FRC mode.

29. The method of claim 23, wherein operating the first and second execution cores in an FRC mode further comprises designating the first and second execution cores as master and slave execution cores, respectively.

30. The method of claim 23, wherein executing the recovery routine further comprises disabling the first execution core and designating the second execution core as master, responsive to an error in the first execution core.

* * * * *