US005905274A

United States Patent [19]

Ahn et al.

[11] **Patent Number: 5,905,274**

[45] **Date of Patent: May 18, 1999**

[54] **THIN-FILM TRANSISTOR AND METHOD OF MAKING SAME**

[75] Inventors: **Byung-Chul Ahn**, Kumi-shi; **Hyun-Sik Seo**, Anyang-shi, both of Rep. of Korea

[73] Assignee: **L.G. Electronics, Inc.**, Youngdungpo-ku, Japan

[21] Appl. No.: **08/918,119**

[22] Filed: **Aug. 27, 1997**

[30] **Foreign Application Priority Data**

Mar. 4, 1997 [KR] Rep. of Korea 97-7010

[51] **Int. Cl.**[6] **H01L 29/04**; H01L 31/036; H01L 31/0376

[52] **U.S. Cl.** **257/59**; 257/61; 257/72; 257/350

[58] **Field of Search** 257/57, 58, 59, 257/60, 61, 66, 72, 350

[56] **References Cited**

U.S. PATENT DOCUMENTS

5,036,370	7/1991	Miyago et al. .	
5,132,745	7/1992	Kwasnick et al. .	
5,156,986	10/1992	Wei et al.	437/40
5,428,250	6/1995	Ikeda et al.	257/761

FOREIGN PATENT DOCUMENTS

0602315	7/1993	European Pat. Off. .
03114028	5/1991	Japan .
6-37311	2/1994	Japan .
2254187	9/1992	United Kingdom .

OTHER PUBLICATIONS

"Low Cost, High Display Quality TFT–LCD Process", Society for Information Display, EuroDisplay 96, Proceedings of the 16th International Display Research Conference, Oct. 1, 1996, 591–594.

"Hilllock–Free A1–Gate Materials Using Stress–Absorbing Buffer Layer for Large Area AMLCDs" Society for Information Display 96 Digest, pp. 341–344, 1996.

Primary Examiner—Ngân V. Ngô
Attorney, Agent, or Firm—Graham & James LLP

[57] **ABSTRACT**

A thin-film transistor includes a substrate and a gate including a double-layered structure having first and second metal layers provided on the substrate, the first metal layer being wider than the second metal layer by about 1 to 4 μm. A method of making such a thin film transistor includes the steps of: depositing a first metal layer on a substrate, depositing a second metal layer directly on the first metal layer; forming a photoresist having a designated width on the second metal layer; patterning the second metal layer via isotropic etching using the photoresist as a mask; patterning the first metal layer by means of an anisotropic etching using the photoresist as a mask, the first metal layer being etched to have the designated width, thus forming a gate having a laminated structure of the first and second metal layers; and removing the photoresist.

6 Claims, 6 Drawing Sheets

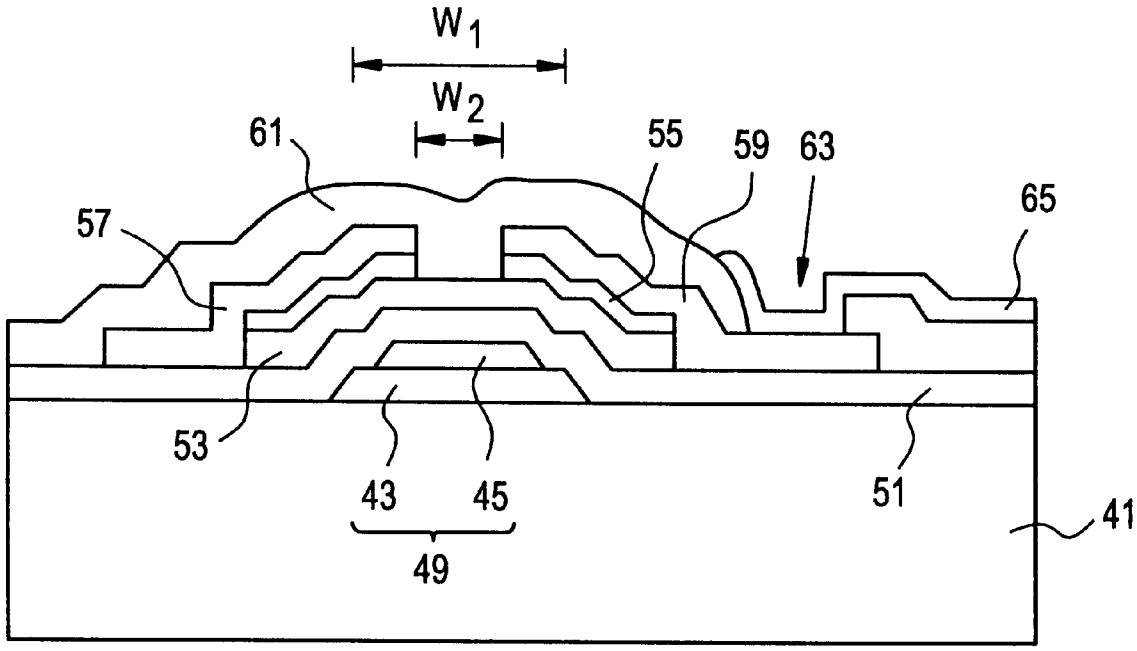

INNOSCIENCE EXHIBIT 1010

FIG. 1A

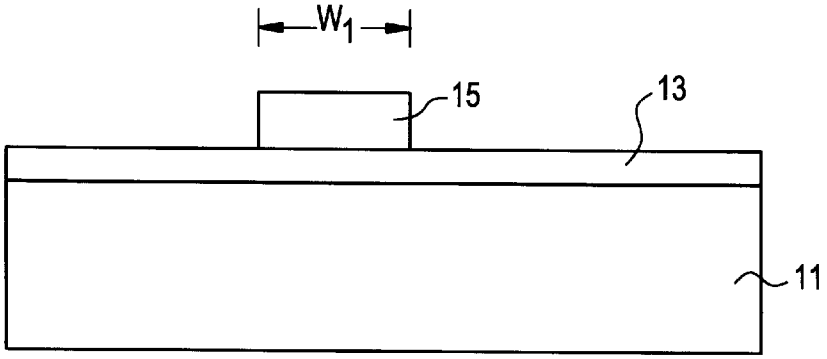

FIG. 1B

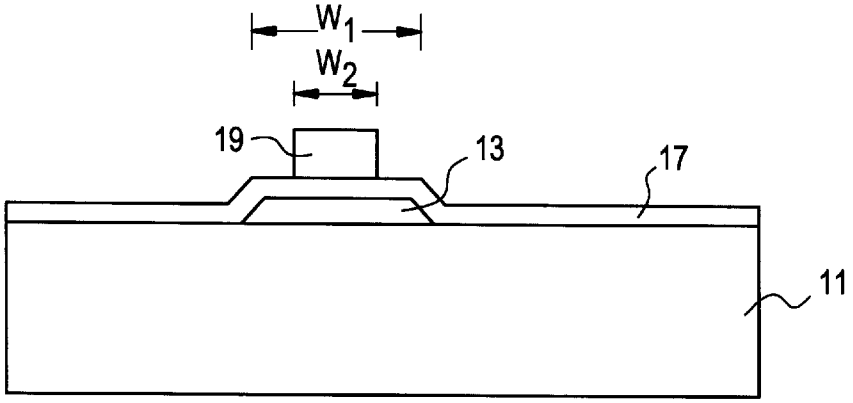

FIG. 1C

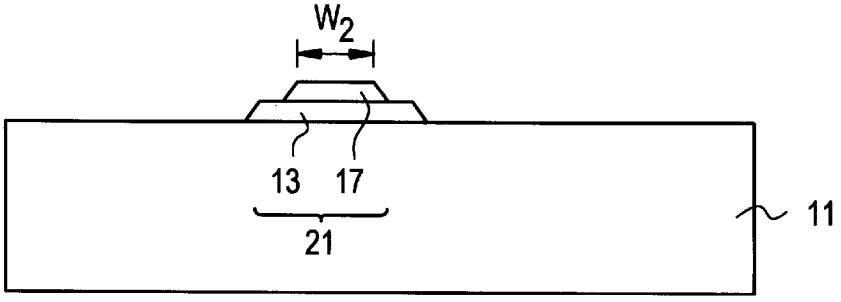

FIG. 1D

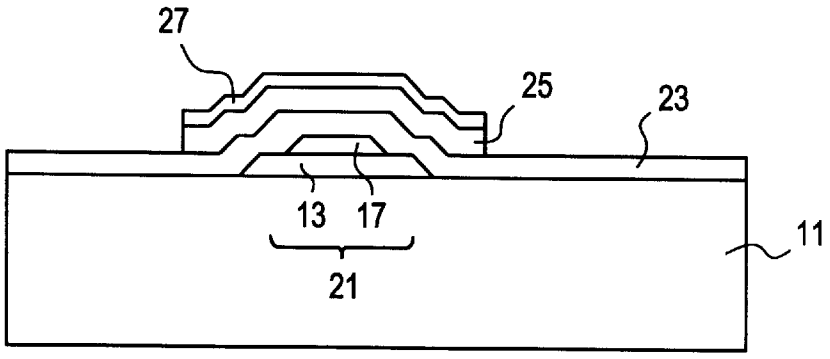

FIG. 1E

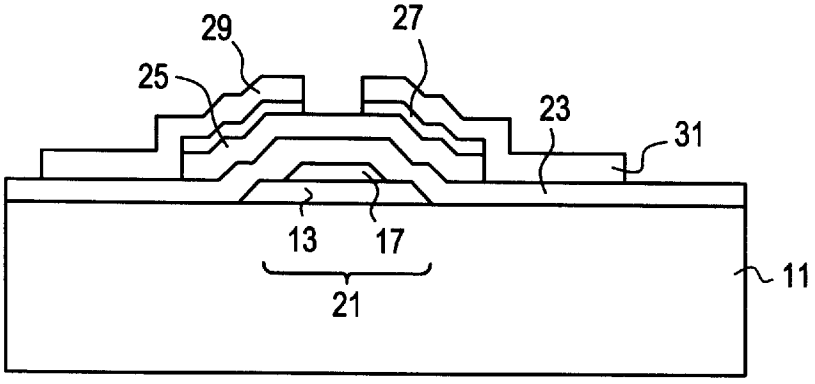

FIG. 1F

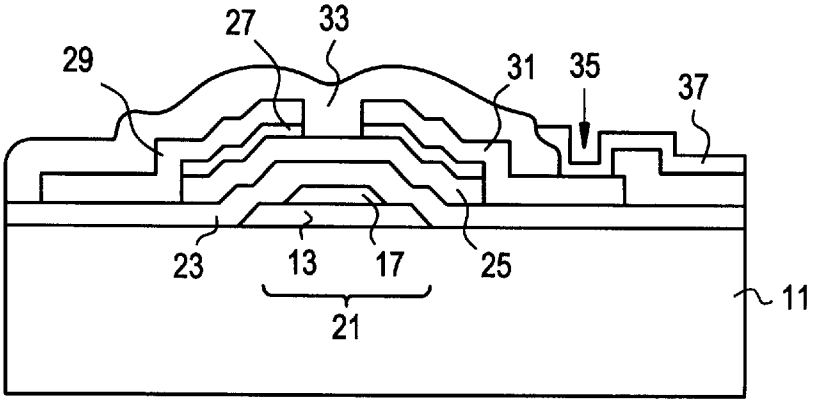

FIG. 2

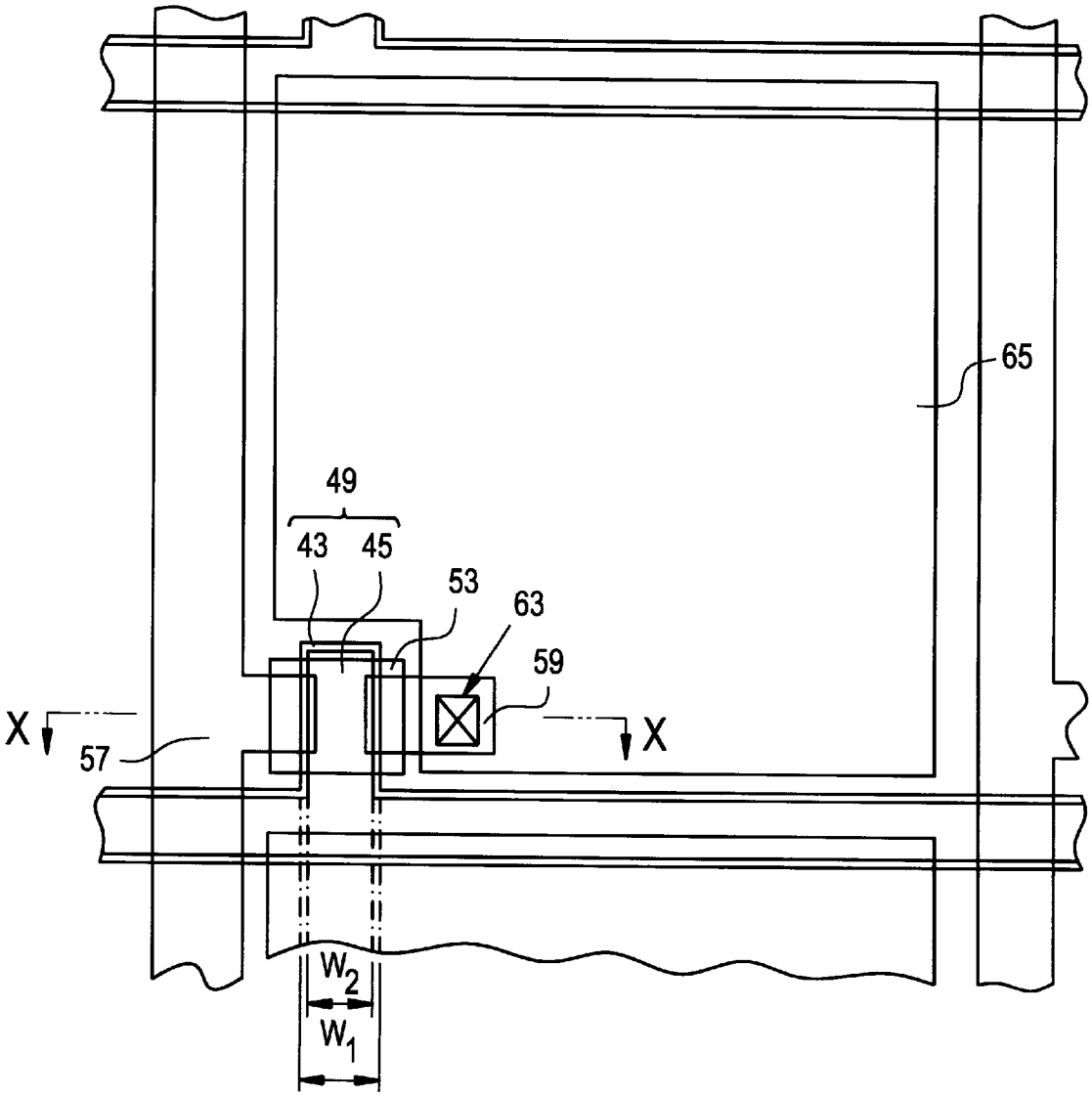

FIG. 3

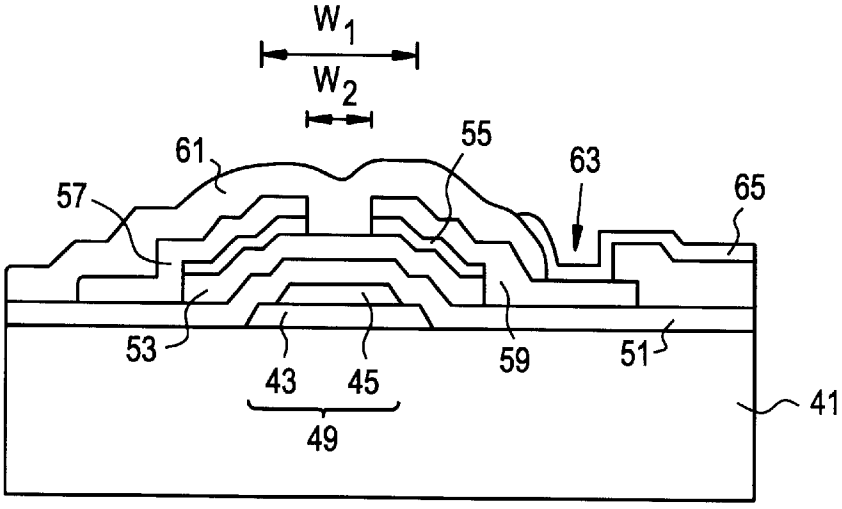

FIG. 4A

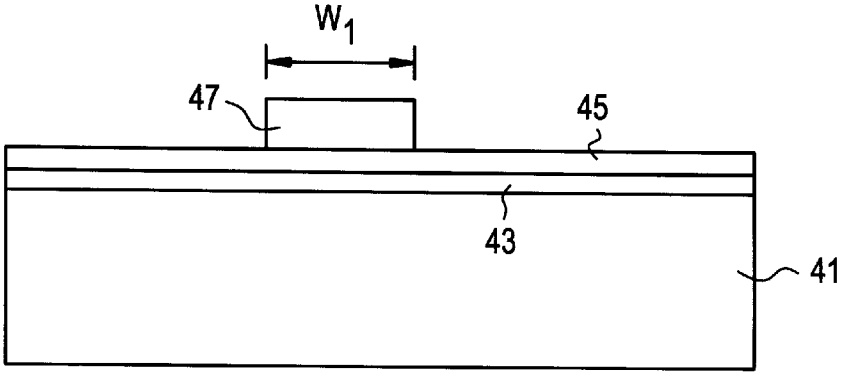

FIG. 4B

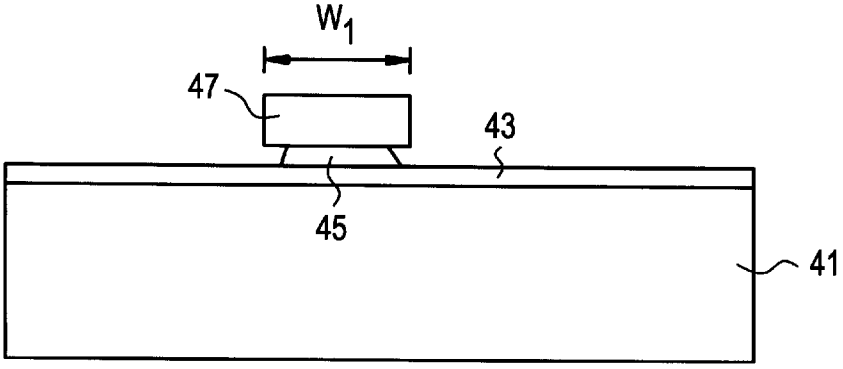

FIG. 4C

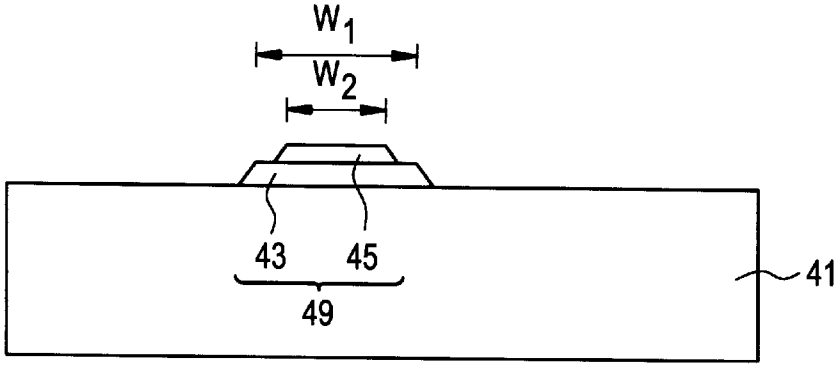

FIG. 4D

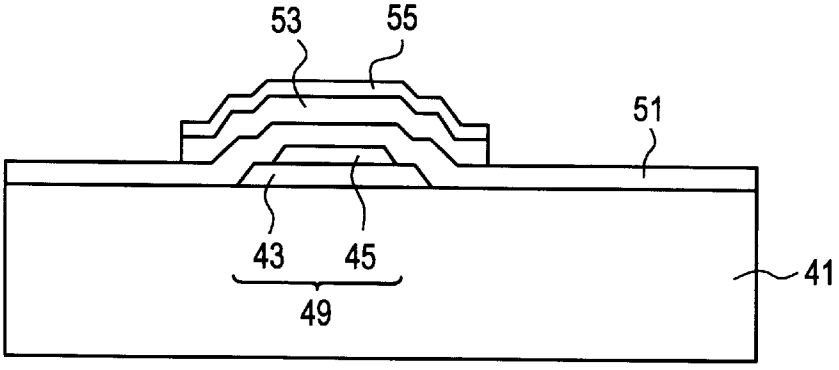

FIG. 4E

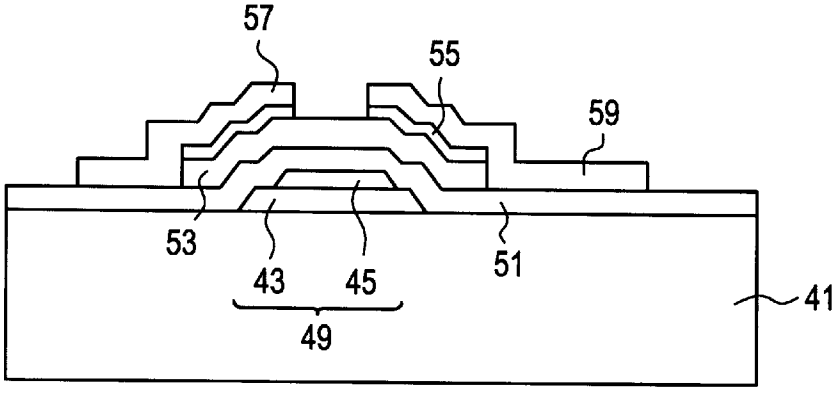

FIG. 4F

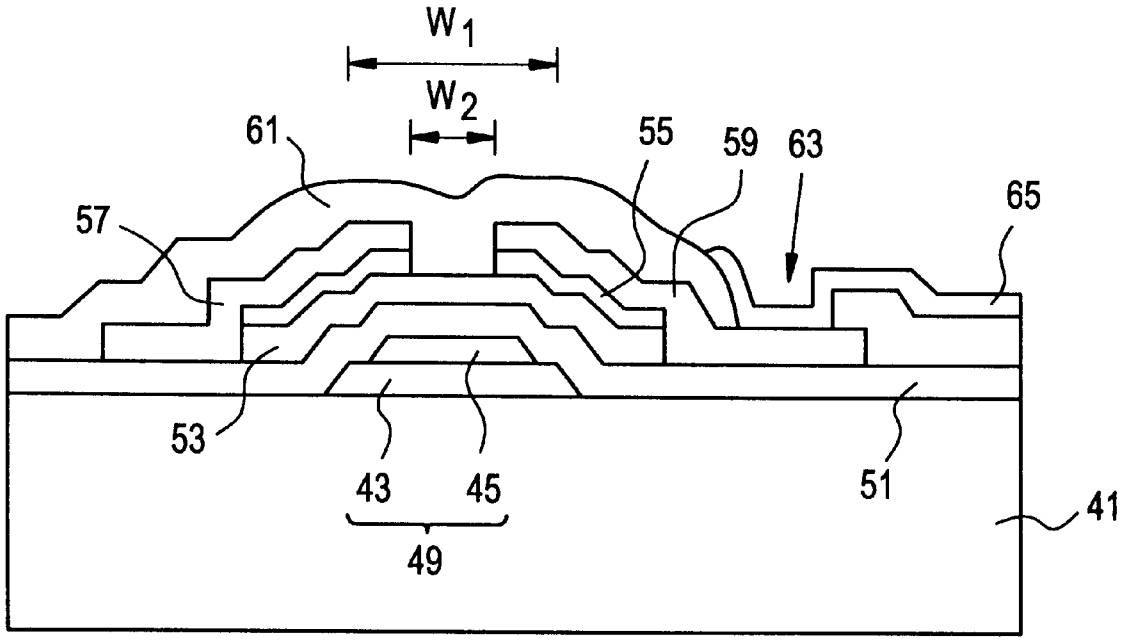

THIN-FILM TRANSISTOR AND METHOD OF MAKING SAME

BACKGROUND OF THE INVENTION

1. Field of the Invention

The present invention relates to a thin-film transistor of a liquid crystal display and, more particularly, to a thin-film transistor having a gate including a double-layered metal structure and a method of making such a double-layered metal gate.

2. Discussion of Related Art

An LCD (Liquid Crystal Display) includes a switching device as a driving element, and a pixel-arranged matrix structure having transparent or light-reflecting pixel electrodes as its basic units. The switching device is a thin-film transistor having gate, source and drain regions.

The gate of the thin-film transistor is made of aluminum to reduce its wiring resistance, but an aluminum gate may cause defects such as hillock.

A double-layered metal gate, i.e., molybdenum-coated aluminum gate is considered as a substitute for the aluminum gate to overcome the problem of the hillock.

To fabricate a double-layered gate, metals such as aluminum and molybdenum are sequentially deposited, followed by a patterning process carried out via photolithography to form resulting metal films which have the same width. Although the double-layered gate is desirable to overcome the problem of hillock, the resulting deposited metal films forming the double-layered gate are so thick that a severe single step is created by a thickness difference between the metal films and a substrate, thereby causing a single step difference between the substrate and the double-layered gate which deteriorates the step coverage of a later formed gate oxide layer. The source and drain regions formed on the gate oxide layer may have disconnections between areas of the source and drain regions which are overlapped and non-overlapped with the gate, or electrically exhibit short circuits as a result of contact with the gate.

According to another method of forming the gate, each of the metal layers of Al and Mo form a double step difference with the substrate so as to improve the step coverage of the gate oxide layer.

FIGS. **1A** through **1F** are diagrams illustrating the process for fabricating a thin-film transistor of a method which is related to the invention described and claimed in the present application. The method shown in FIGS. **1A–1F** is not believed to be published prior art but is merely a recently discovered method related to the invention described and claimed in the present application.

Referring to FIG. **1A**, aluminum is deposited on a substrate **11** to form a first metal layer **13**. A first photoresist **15** is deposited on the first metal layer **13**. The first photoresist **15** is exposed and developed so as to have a certain width w**1** extending along the first metal layer **13**.

Referring to FIG. **1B**, the first metal layer **13** is patterned via wet etching using the first photoresist **15** as a mask so that the first metal layer **13** has a certain width w**1**. After the first photoresist **15** is removed, a second metal layer **17** is formed by depositing Mo, Ta, or Co on the substrate **11** so as to cover the first metal layer **13**. A second photoresist **19** is then deposited on the second metal layer **17**. The second photoresist **19** is exposed and developed so as to have a certain width w**2** extending along the second metal layer **17** and located above the first metal layer **13**.

Referring to FIG. **1C**, the second metal layer **17** is patterned via a wet etching process using the second photoresist **19** as a mask such that the second metal layer **17** has a certain width w**2** which is narrower than the width w**1** of the first metal layer **13**. After formation of the gate **21**, the second photoresist **19** is removed.

Thus, the patterned first and second metal layers **13** and **17** form a gate **21** having a double-layered metal structure that provides a double step difference between the double-layered metal gate structure **21** and the substrate **11**. The formation of the gate **21** as described above and shown in FIGS. **1–3** requires the use of two photoresists **15**, **19** and two photoresist steps.

In the gate **21** shown in FIG. **3**, the second metal layer **17** is preferably centrally located on the first metal layer **13**. Although there is no specific information available regarding a relationship of w**1** to w**2** of this related method, based on their understanding of this related method resulting in the structure shown in FIG. **3**, the inventors of the invention described and claimed in the present application assume that the width difference w**1**–w**2** between the first and second metal layers **13** and **17** is larger than or equal to 4 μm, that is, w**1**–w**2**$\geqq$4 μm.

Referring to FIG. **1D**, a first insulating layer **23** is formed by depositing silicon oxide SiO_2 or silicon nitride Si_3N_4 as a single-layered or double-layered structure on the gate **21** and substrate **11**. Semiconductor and ohmic contact layers **25** and **27** are formed by sequentially depositing undoped polycrystalline silicon and heavily doped silicon on the first insulating layer **23**. The semiconductor and ohmic contact layers **25** and **27** are patterned to expose the first insulating layer **23** by photolithography.

Referring to FIG. **1E**, conductive metal such as aluminum is laminated on the insulating and ohmic contact layers **23** and **27**. The conductive metal is patterned by photolithography so as to form a source electrode **29** and a drain electrode **31**. A portion of the ohmic contact layer **27** exposed between the source and drain electrodes **29** and **31** is etched by using the source and drain electrodes **29** and **31** as masks.

Referring to FIG. **1F**, silicon oxide or silicon nitride is deposited on the entire surface of the structure to form a second insulating layer **33**. The second insulating layer **33** is etched to expose a designated portion of the drain electrode **31**, thus forming a contact hole **35**. By depositing transparent and conductive material on the second insulating layer **33** and patterning it via photolithography, a pixel electrode **37** is formed so as to be electrically connected to the drain electrode **31** through the contact hole **35**.

According to the method of fabricating a thin-film transistor as described above and shown in FIGS. **1A–1F**, respective first and second metal layers are formed through photolithography using different masks so as to form the gate with a double-layered metal structure, resulting in double step differences between the gate and substrate.

As a result of the double step difference between the gate **21** and the substrate **11** shown in FIG. **1C**, a hillock often occurs on both side portions of the first metal layer **13** which have no portion of the second metal layer **17** deposited thereon when the first metal layer **13** is wider than the second metal layer **17** as in FIG. **1C**. Another problem with this related method is that the process for forming a gate is complex and requires two photoresists **15**, **19** and two steps of deposition and photolithography. As a result, the contact resistance between the first and second metal layers may be increased.

Another method of forming a double metal layer gate structure is described in "Low Cost, High Quality TFT-LCD

Process", SOCIETY FOR INFORMATION DISPLAY EURO DISPLAY 96, Proceedings of the 16th International Display Research Conference, Birmingham, England, Oct. 1, 1996, pages 591–594. On page 592 of this publication, a method of forming a double metal gate structure includes the process of depositing two metal layers first and then patterning the two metal layers to thereby eliminate an additional photoresist step. However, with this method, process difficulties during the one step photoresist process for forming the double metal layer gate resulted in the top layer being wider than the bottom layer causing an overhang condition in which the top layer overhangs the bottom layer. This difficulty may result in poor step coverage and disconnection. This problem was solved by using a three-step etching process in which the photoresist had to be baked before each of the three etching steps to avoid lift-off or removal of the photoresist during etching. This three-step etching process and required baking of the photoresist significantly increases the complexity and steps of the gate forming method.

SUMMARY OF THE INVENTION

To overcome the problems discussed above, the preferred embodiments of the present invention provide a thin-film transistor which prevents a hillock and deterioration of step coverage of a later formed gate oxide layer on a double metal layer gate.

The preferred embodiments of the present invention also provide a method of fabricating a thin-film transistor that simplifies the process for forming a double metal layer gate.

The preferred embodiments of the present invention further provide a method of fabricating a thin-film transistor that reduces the contact resistance between the first and second metal layers constituting a gate.

Additional features and advantages of the invention will be set forth in the description which follows, and in part will be apparent from the description, or may be learned by practice of the invention. The objectives and other advantages of the invention will be realized and attained by the structure particularly pointed out in the written description and claims hereof, as well as, the appended drawings.

To achieve these and other advantages and in accordance with the purpose of the preferred embodiments of the present invention, as embodied and broadly described, a thin-film transistor preferably comprises a substrate, and a gate including a double-layered structure of first and second metal layers disposed on the substrate, the first metal layer being wider than the second metal layer by about 1 to 4 μm, and a method of making such a thin-film transistor preferably comprises the steps of: depositing a first metal layer on a substrate, depositing a second metal layer directly on the first metal layer; forming a photoresist having a desired width on the second metal layer; patterning the second metal layer via an isotropic etching using the photoresist as a mask; patterning the first metal layer via an anisotropic etching using the photoresist as a mask, the first metal layer being etched to have a desired width, thus forming a gate having a laminated structure of the first and second metal layers; and removing the photoresist.

These and other elements, features, and advantages of the preferred embodiments of the present invention will be apparent from the following detailed description of the preferred embodiments of the present invention, as illustrated in the accompanying drawings.

BRIEF DESCRIPTION OF THE DRAWINGS

The accompanying drawings, which are included to provide a further understanding of the invention and are incorporated in and constitute a part of this specification, illustrate preferred embodiments of the invention and together with the description serve to explain the principles of the invention, in which:

FIGS. **1**A through **1**F are diagrams illustrating a process for fabricating a thin-film transistor according to a method which is related to the preferred embodiments of the present invention;

FIG. **2** is a top view of a thin-film transistor according to a preferred embodiment of the present invention;

FIG. **3** is a cross-sectional view taken along line X—X of FIG. **2**; and

FIGS. **4**A through **4**F are diagrams illustrating a process for fabricating a thin-film transistor of preferred embodiments of the present invention.

DETAILED DESCRIPTION OF PREFERRED EMBODIMENTS

Reference will now be made in detail to preferred embodiments of the present invention, examples of which are illustrated in the accompanying drawings.

FIG. **2** is a top view of a thin-film transistor according to a preferred embodiment of the present invention. FIG. **3** is a cross-sectional view taken along line x—x of FIG. **2**.

The thin-film transistor comprises a gate **49** having a double-layered structure of a first metal layer **43**, a second metal layer **45** disposed on a substrate **41**, a first insulating layer **51**, a second insulating layer **61**, a semiconductor layer **53**, an ohmic contact layer **55**, a source electrode **57**, a drain electrode **59**, and a pixel electrode **65**.

The gate **49** has a double-layered structure including the first and second metal layers **43** and **45** disposed on the substrate **41**. The first metal layer **43** is preferably formed from a conductive metal such as Al, Cu, or Au deposited to have a certain width w**1**. The second metal layer **45** is preferably formed from a refractory metal such as Mo, Ta, or Co deposited to have a certain width w**2**.

The present inventors have discovered that a relationship between the width of the first metal layer and the width of the second metal layer of a double metal layer gate electrode is critical to preventing deterioration of step coverage of a later formed gate oxide layer in such a structure having a double step difference between the substrate and the gate. More specifically, the present inventors determined that a structure wherein the first metal layer **43** is wider than the second metal layer **45** by about 1 to 4 μm, for example, 1 μm<w**1**–w**2**<4 μm, provides maximum prevention of deterioration of step coverage of a later formed gate oxide layer in such a structure having a double step difference between the substrate and the gate.

To achieve the best results, the second metal layer **45** is preferably positioned substantially in the middle of the first metal layer **45**, so that both side portions of the first metal layer **43** which have no portion of the second metal layer **45** disposed thereon have substantially the same width as each other. The width of each of the side portions is preferably larger than about 0.5 μm but less than about 2 μm.

The first insulating layer **51** is preferably formed by depositing single layer of silicon oxide SiO_2 or silicon nitride Si_3N_4 on the substrate including the gate **49**.

The semiconductor and ohmic contact layers **53** and **55** are formed on the portion of the first insulating layer **51** corresponding to the gate **49** by sequentially depositing undoped amorphous silicon and heavily doped amorphous silicon and patterning the two silicon layers. The semicon-

ductor layer **53** is used as the active region of an element, thus forming a channel by means of a voltage applied to the gate **49**. The ohmic contact layer **55** provides an ohmic contact between the semiconductor layer **53** and the source and drain electrodes **57** and **59**. The ohmic contact layer **55** is not formed in the portion that becomes the channel of the semiconductor layer **53**.

The source and drain electrodes **57** and **59** are in contact with the ohmic contact layer **55**, and each electrode **57**, **59** extends to a designated portion on the first insulating layer **51**.

The second insulating layer **61** is formed by depositing insulating material such as silicon oxide SiO_2 silicon nitride Si_3N_4 to cover the source and drain electrodes **57** and **59** and the first insulating layer **51**. The second insulating layer **61** on the drain electrode **59** is removed to form a contact hole **63**. The pixel electrode **65** is formed from transparent and conductive material such as ITO (Indium Tin Oxide) or Tin oxide SnO_2, so that it is connected to the drain electrode **59** through the contact hole **63**.

In the first and second metal layers **43** and **45** constituting the gate **49**, each side portion of the first metal layer **43** having no portion of the second metal layer **45** thereon has a width that is preferably larger than about 0.5 μm and less than about 2 μm. Because the first metal layer **43** is wider than the second metal layer **45** by about 1.0 μm to 4.0 μm, double step differences determined according to the relationship between the width of the first metal layer and the width of the second metal layer are formed between the gate **49** and substrate **41**. The double step differences determined according to the novel features of the preferred embodiments of the present invention prevent deterioration of the coverage of the first insulating layer **51** which deterioration occurs in prior art devices. The hillock in the first metal layer **43** is also avoidable because the width difference between the first and second metal layers **43** and **45** is between about 1 μm to 4 μm.

FIGS. **4A** through **4F** are diagrams illustrating the process for fabricating the thin-film transistor of the preferred embodiments of the present invention.

Referring to FIG. **4A**, metal such as Al, Cu, or Au is deposited on a substrate so as to form a first metal layer **43**. A second metal layer **45** is formed from Mo, Ta, or Co and deposited on the first metal layer **43** without performing a masking step between the step of depositing the first metal layer and the step of depositing the second metal layer. The first and second metal layers **43** and **45** are sequentially deposited so as to preferably have a thickness as large as about 500–4000A and 500–2000A, respectively, by means of sputtering or chemical vapor deposition (hereinafter, referred to as CVD) without breaking a vacuum state. As a result, the contact resistance between the first and second metal layers **43** and **45** is reduced.

According to the preferred embodiments of the present invention, a single photoresist step is used to pattern both the first metal layer **43** and the second metal layer **45** simultaneously. In the single photoresist step, a photoresist **47** is deposited on the second metal layer **45** and then the photoresist **47** is patterned through exposure and development to have the width w**1** on a designated portion of the second metal layer **45**.

Referring to FIG. **4B**, the second metal layer **45** is patterned with an etching solution preferably prepared with a mixture of phosphoric acid H_3PO_4, acetic acid CH_3COOH and nitric acid HNO_3, by means of a wet etching using the photoresist **47** as a mask. Because the portion of the second metal layer **45** covered with the photoresist **47**, as well as, exposed side portions of the second metal layer **45** are isotopically etched, the second metal layer **45** is preferably patterned to have the width w**2** which is narrower than the width w**1** of the photoresist **47** which is the same as the width w**1** of the first metal layer **43**, that is, about 1 μm<w**1**–w**2**<4 μm. Each side portion of the second metal layer **45** preferably has a width larger than about 0.5 μm and less than about 2 μm. That is, the two side portions of the second metal layer **45** covered with the photoresist **47** are preferably etched to have substantially the same width as each other. The lateral surfaces of the second metal layer **45** are preferably etched to have a substantially rectangular or inclined shape.

Referring to FIG. **4C**, the first metal layer **43** is patterned via a wet etching having anisotropic etching characteristic such as reactive ion etching (hereinafter, referred to as RIE) by using the photoresist **47** as a mask. When etching the first metal layer **43** other than the portion of the layer **43** covered with the photoresist **47**, the first metal layer **43** preferably has the same width w**1** of the photoresist **47**. Thus, patterning of the first and second metal layers **43**, **45**, respectively, only requires two etching steps and does not require baking of the photoresist before each step of etching. Also, the relation between the first and second metal layers **43** and **45** also may be represented by about 1 μm<w**1**–w**2**<4 μm.

The first and second metal layers **43** and **45** resulting from the single photoresist step process described above form a gate **49** having a double-layered metal structure. The gate **49** has the second metal layer **45** positioned substantially in the middle of the first metal layer **43** so that the each side portion of the first metal layer **43** having no second metal layer **45** thereon is wider than about 0.5 μm but narrower than about 2 μm. The photoresist **47** remaining on the second metal layer **45** is removed after the two etching steps are completed.

Referring to FIG. **4D**, a first insulating layer **51** is formed by depositing a single layer or double layers of silicon oxide SiO_2 or silicon nitride Si_3N_4 on the gate **49** and substrate **41** by CVD. Because each side portion of the first metal layer **43** having no second metal layer **45** thereon is wider than about 0.5 μm, double step differences formed between the substrate and gate can prevent the coverage of the first insulating layer **51** from being deteriorated as in prior art devices. The hillock in the first metal layer **43** is also avoidable because a width of a portion of the first metal layer **43** which is exposed is less than about 2 μm.

Amorphous silicon which is undoped and heavily doped amorphous silicon are sequentially deposited on the first insulating layer **41** by CVD, thus forming semiconductor and ohmic contact layers **53** and **55**. The ohmic contact and semiconductor layers **55** and **53** are patterned by means of photolithography to expose the first insulating layer **51**.

Referring to FIG. **4E**, conductive metal such as Al or Cr is laminated on the insulating and ohmic contact layers **51** and **55** and patterned by photolithography to form source and drain electrodes **57** and **59**. The ohmic contact layer **55** exposed between the source and drain electrodes **57** and **59** is etched by using the source drain electrodes **57** and **59** as masks.

Referring to FIG. **4F**, a second insulating layer **61** is formed by depositing insulating material such as silicon oxide or silicon nitride by CVD on the entire surface of the above structure. The second insulating layer is removed by photolithography to expose a designated portion of the drain electrode **59** and thus form a contact hole **63**. Once trans-

parent and conductive material such as ITO (Indium Tin Oxide) or Tin oxide SnO_2 is deposited on the second insulating layer **61** via sputtering and patterned by photolithography, a pixel electrode **65** is formed so that it is electrically connected to the drain electrode **59** through the contact hole **63**.

In another preferred embodiment of the present invention, the first and second metal layers **43** and **45** are first etched by means of a dry etching having anisotropic etching characteristic such as RIE by using the photoresist **47** as a mask. The gate **49** is formed by etching the second metal layer **45** under the photoresist **47** with an etching solution prepared with a mixture of phosphoric acid H_3PO_4, acetic acid CH_3COOH and nitric acid HNO_3.

In still another preferred embodiment of the present invention, the gate **49** is formed through a single etching step process for etching the first and second metal layers **43** and **45** simultaneously and via a single etching step, where the second metal layer **45** is etched more quickly than the first metal layer **43** with an etching solution prepared with a mixture of phosphoric acid H_3PO_4, acetic acid CH_3COOH and nitric acid HNO_3. Because of the etching material and metals used for the first and second metal layers of the gate, only a single etching step is required. Despite the fact that a single etching step is used, it is still possible to obtain the relationship between the widths w**1** and w**2** of the first and second metal layers described above. In this process, the first and second metal layers forming the gate **49** are formed and patterned with a single photo resist step as described above and a single etching step.

As described above, in the preferred embodiments of the present invention, the first and second metal layers are sequentially deposited on the substrate without performing a masking step between the step of depositing the first metal layer and the second metal layer, followed by forming a photoresist that covers a designated portion of the second metal layer. In one preferred embodiment, the second metal layer is wet etched by using the photoresist as a mask but the first metal layer is dry etched. As a result, the double-metal gate is formed. In another preferred embodiment, a single etching step is used to form the double-metal gate wherein both the first metal layer and the second metal layer are wet etched, but the different in etching rates of the first and second metal layers produces different etching affects which result in the desired double-step structure.

While the invention has been particularly shown and described with reference to preferred embodiments thereof, it will be understood by those skilled in the art that the foregoing and other changes in form and details may be made therein without departing from the spirit and scope of the invention.

What is claimed is:

1. A thin film transistor comprising:

a substrate; and

a gate including a double-layered structure having a first metal layer which is a bottom layer disposed on the substrate and a second metal layer disposed on the first metal layer, the first metal layer including aluminum, the second metal layer being arranged on the first metal layer to prevent hillock at the sides of the aluminum first metal layer, the first metal layer being wider than the second metal layer by about 1 to 4 μm.

2. The thin-film transistor as claimed in claim **1**, wherein the second metal layer is located in a middle portion of the first metal layer so that two side portions of the first metal layer having no second metal layer disposed thereon have the same width as each other.

3. The thin-film transistor as claimed in claim **1**, wherein the second metal layer includes at least one of Mo, Ta, and Co.

4. A thin film transistor comprising:

a substrate;

a gate including a double-layered structure having a first metal layer which is a bottom layer disposed on the substrate and a second metal layer disposed on the first metal layer, the first metal layer including aluminum, the second metal layer being arranged on the first metal layer to prevent hillock at the sides of the aluminum first metal layer, the first metal layer being wider than the second metal layer by about 1 to 4 μm;

a first insulating layer disposed on the substrate including the gate;

a semiconductor layer disposed on a portion of the first insulating layer at a location corresponding to the gate;

an ohmic contact layer disposed on two sides of the semiconductor layer;

a source electrode and a drain electrode disposed on the ohmic contact layer and extending onto the first insulating layer; and

a second insulating layer covering the semiconductor layer, the source and drain electrodes and the first insulating layer.

5. The thin-film transistor as claimed in claim **4**, wherein the second metal layer is located in a middle portion of the first metal layer so that two side portions of the first metal layer having no second layer thereon have the same width as each other.

6. The thin-film transistor as claimed in claim **4**, wherein the second metal layer includes at least one of Mo, Ta, and Co.

* * * * *

US005905274C1

(12) EX PARTE REEXAMINATION CERTIFICATE (9378th)

United States Patent
Ahn et al.

(10) **Number: US 5,905,274 C1**
(45) **Certificate Issued: Oct. 26, 2012**

(54) **THIN-FILM TRANSISTOR AND METHOD OF MAKING SAME**

(75) Inventors: **Byung-Chul Ahn**, Kumi-shi (KR); **Hyun-Sik Seo**, Anyang-shi (KR)

(73) Assignee: **LG Display Co., Ltd.**, Seoul (KR)

Reexamination Request:
No. 90/009,481, Jun. 8, 2009

Reexamination Certificate for:

Patent No.:	**5,905,274**
Issued:	**May 18, 1999**
Appl. No.:	**08/918,119**
Filed:	**Aug. 27, 1997**

(30) **Foreign Application Priority Data**

Mar. 4, 1997 (KR) 97-7010

(51) **Int. Cl.**

H01L 29/66	(2006.01)
H01L 29/40	(2006.01)
H01L 21/28	(2006.01)
H01L 21/336	(2006.01)
H01L 29/423	(2006.01)
H01L 29/49	(2006.01)
H01L 29/786	(2006.01)
H01L 21/02	(2006.01)

(52) **U.S. Cl.** **257/59**; 257/61; 257/72; 257/350; 257/E29.137; 257/E29.283; 257/E29.151; 257/E21.414

(58) **Field of Classification Search** ..... None
See application file for complete search history.

(56) **References Cited**

To view the complete listing of prior art documents cited during the proceeding for Reexamination Control Number 90/009,481, please refer to the USPTO's public Patent Application Information Retrieval (PAIR) system under the Display References tab.

Primary Examiner — Erik Kielin

(57) **ABSTRACT**

A thin-film transistor includes a substrate and a gate including a double-layered structure having first and second metal layers provided on the substrate, the first metal layer being wider than the second metal layer by about 1 to 4 μm. A method of making such a thin film transistor includes the steps of: depositing a first metal layer on a substrate, depositing a second metal layer directly on the first metal layer; forming a photoresist having a designated width on the second metal layer; patterning the second metal layer via isotropic etching using the photoresist as a mask; patterning the first metal layer by means of an anisotropic etching using the photoresist as a mask, the first metal layer being etched to have the designated width, thus forming a gate having a laminated structure of the first and second metal layers; and removing the photoresist.

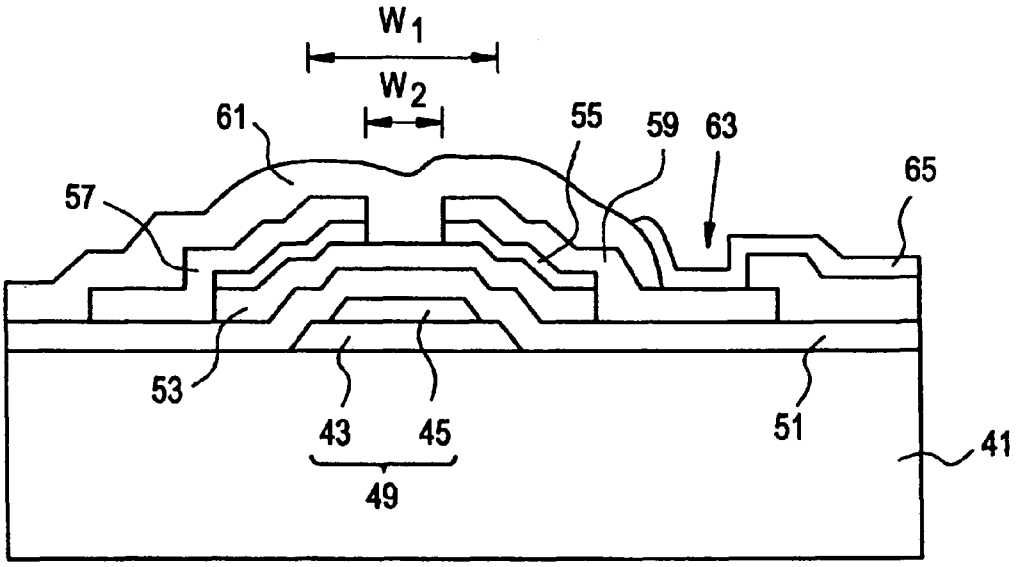

EX PARTE REEXAMINATION CERTIFICATE ISSUED UNDER 35 U.S.C. 307

THE PATENT IS HEREBY AMENDED AS INDICATED BELOW.

AS A RESULT OF REEXAMINATION, IT HAS BEEN DETERMINED THAT:

Claims **1-6** are cancelled.

* * * * *