US 20060273347A1

(19) United States

(12) Patent Application Publication

(10) Pub. No.: US 2006/0273347 A1

(43) Pub. Date: Dec. 7, 2006

Hikita et al.

(54) FIELD-EFFECT TRANSISTOR AND METHOD FOR FABRICATING THE SAME

(76) Inventors: **Masahiro Hikita**, Hyogo (JP); **Tetsuzo Ueda**, Osaka (JP); **Manabu Yanagihara**, Osaka (JP); **Yasuhiro Uemoto**, Shiga (JP); **Tsuyoshi Tanaka**, Osaka (JP)

Correspondence Address:
MCDERMOTT WILL & EMERY LLP
600 13TH STREET, N.W.
WASHINGTON, DC 20005-3096 (US)

(21) Appl. No.: **11/433,734**

(22) Filed: **May 15, 2006**

(30) **Foreign Application Priority Data**

Jun. 6, 2005 (JP) 2005-165143

Publication Classification

(51) **Int. Cl.**
H01L 31/00 (2006.01)

(52) **U.S. Cl.** **257/192**; 438/285; 257/194; 257/E29

(57) **ABSTRACT**

An AlN buffer layer, an undoped GaN layer, an undoped AlGaN layer, a p-type GaN layer and a heavily doped p-type GaN layer are formed in this order. A gate electrode forms an Ohmic contact with the heavily doped p-type GaN layer. A source electrode and a drain electrode are provided on the undoped AlGaN layer. A pn junction is formed in a gate region by a two dimensional electron gas generated at an interface between the undoped AlGaN layer and the undoped GaN layer and the p-type GaN layer, so that a gate voltage can be increased.

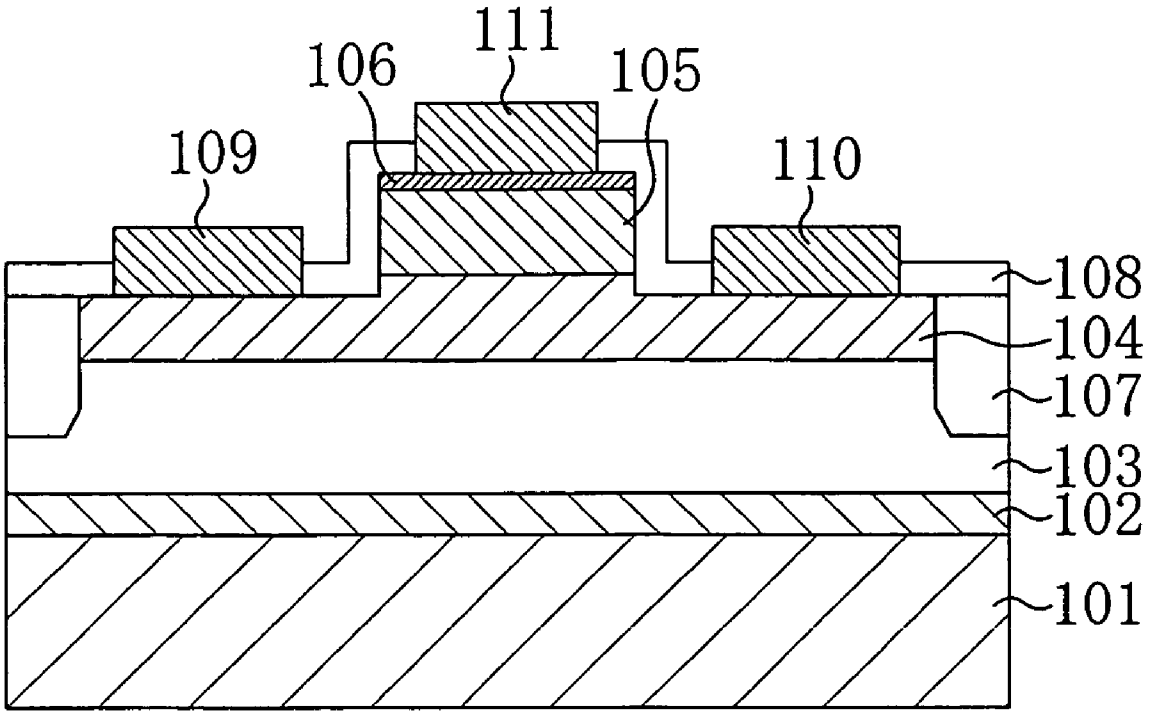

INNOSCIENCE EXHIBIT 1007

FIG. 1

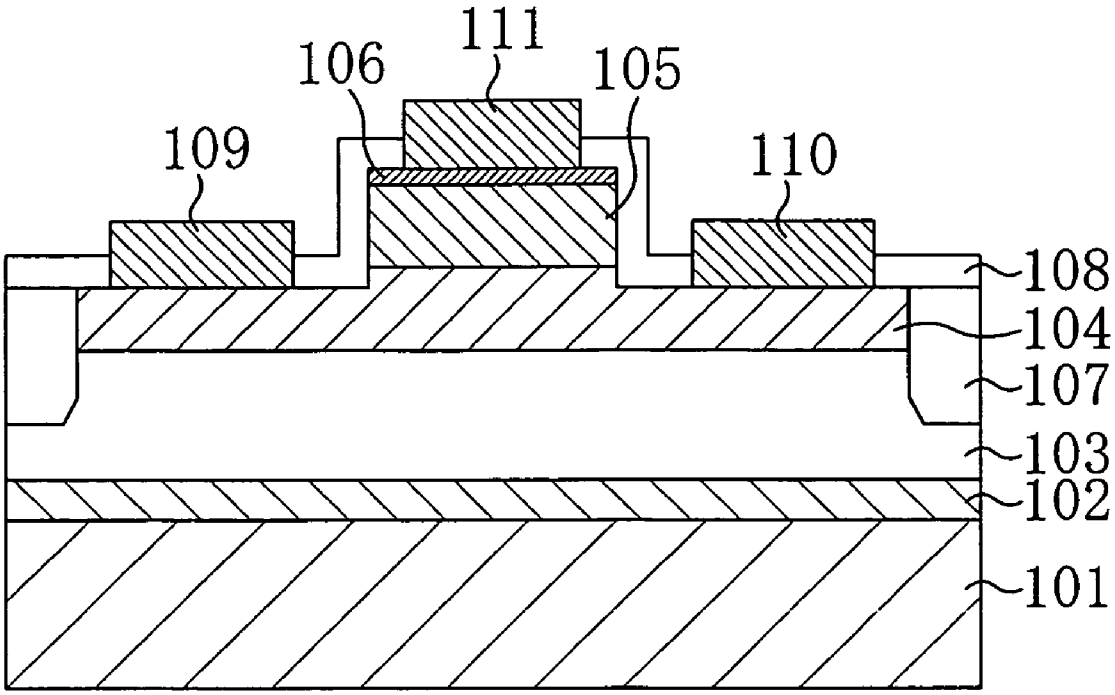

FIG. 2A

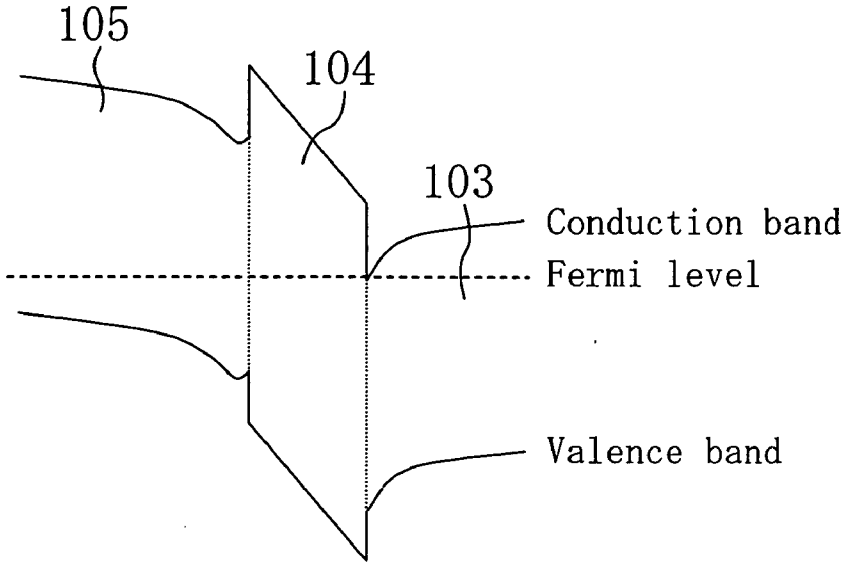
105
104
103
Conduction band
Fermi level
Valence band

FIG. 2B

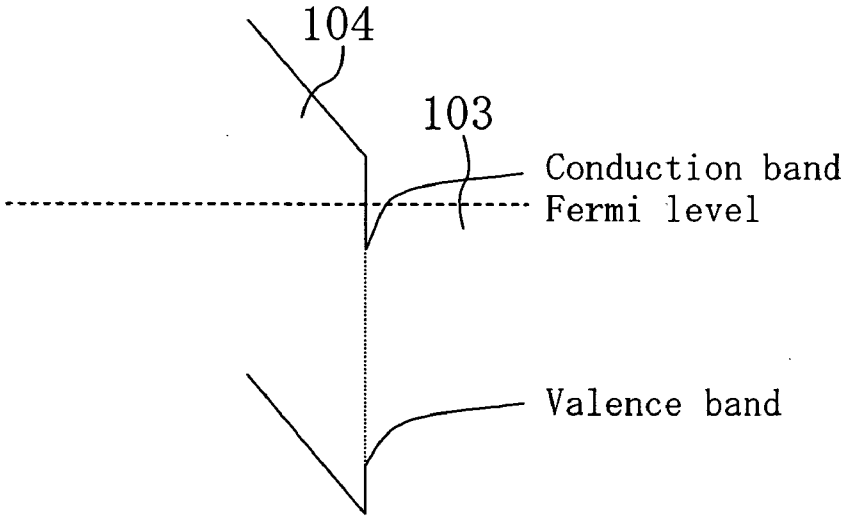
104
103
Conduction band
Fermi level
Valence band

FIG. 3A

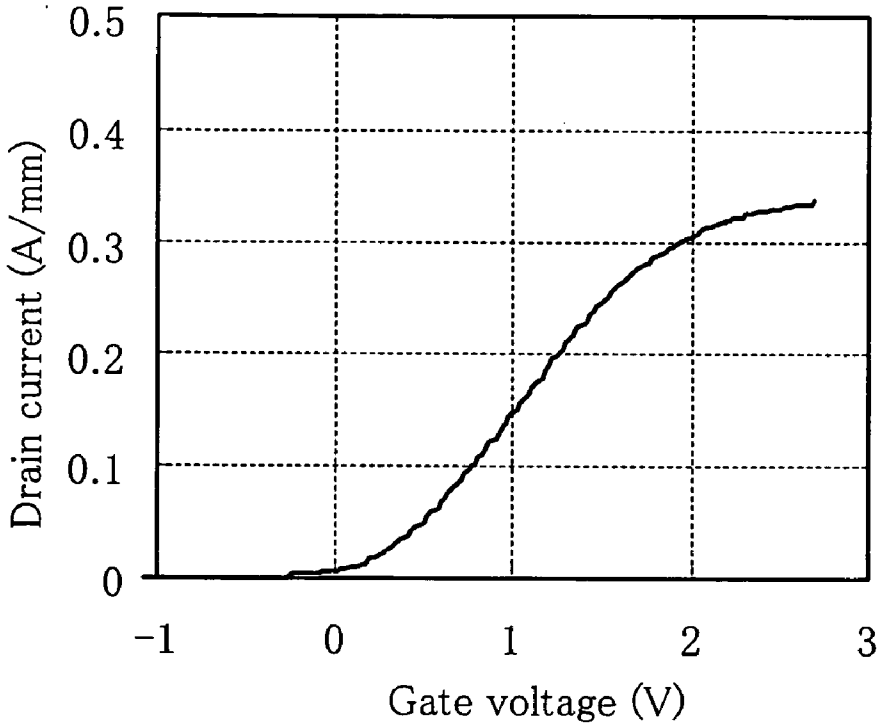
0.5
0.4
0.3
0.2
0.1
0
Drain current (A/mm)
-1
0
1
2
3
Gate voltage (V)

FIG. 3B

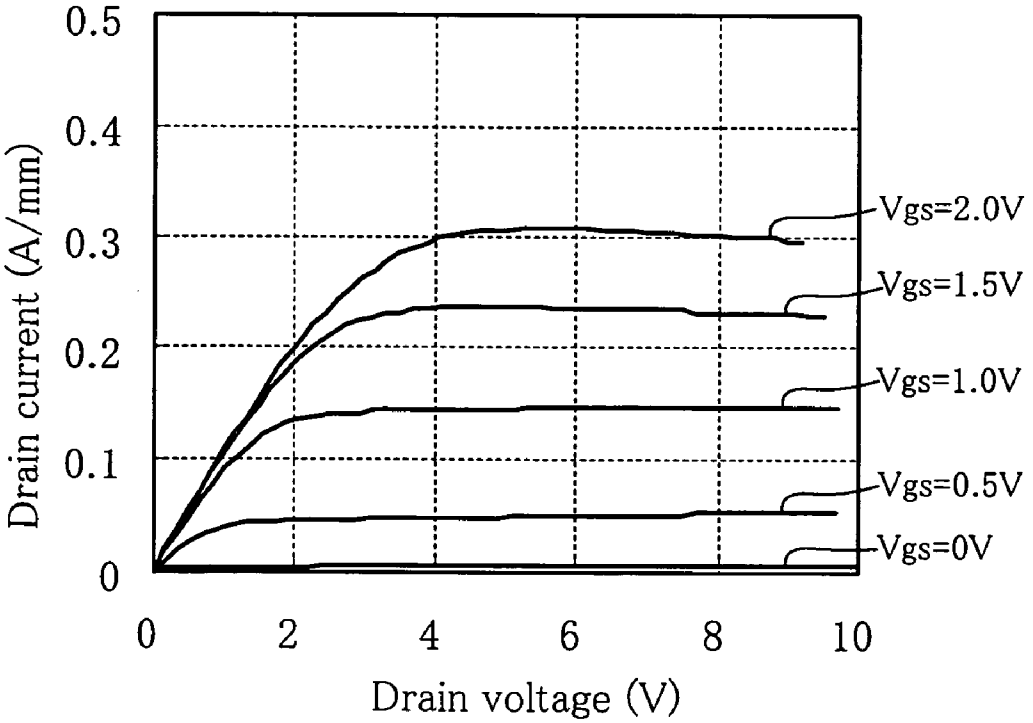
0.5
0.4
0.3
0.2
0.1
0
Drain current (A/mm)
Vgs=2.0V
Vgs=1.5V
Vgs=1.0V
Vgs=0.5V
Vgs=0V
0
2
4
6
8
10
Drain voltage (V)

FIG. 4

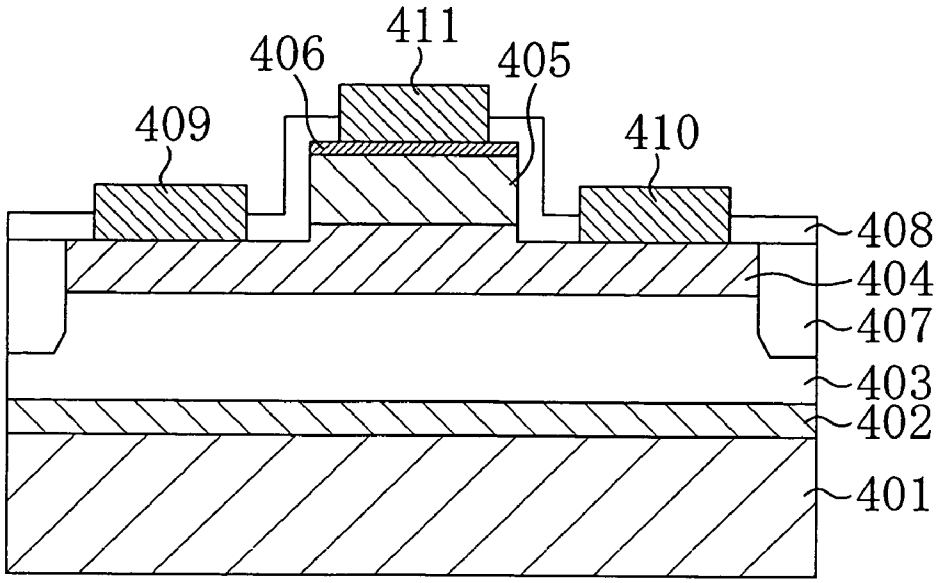
411
406
405
409
410
408
404
407
403
402
401

FIG. 5

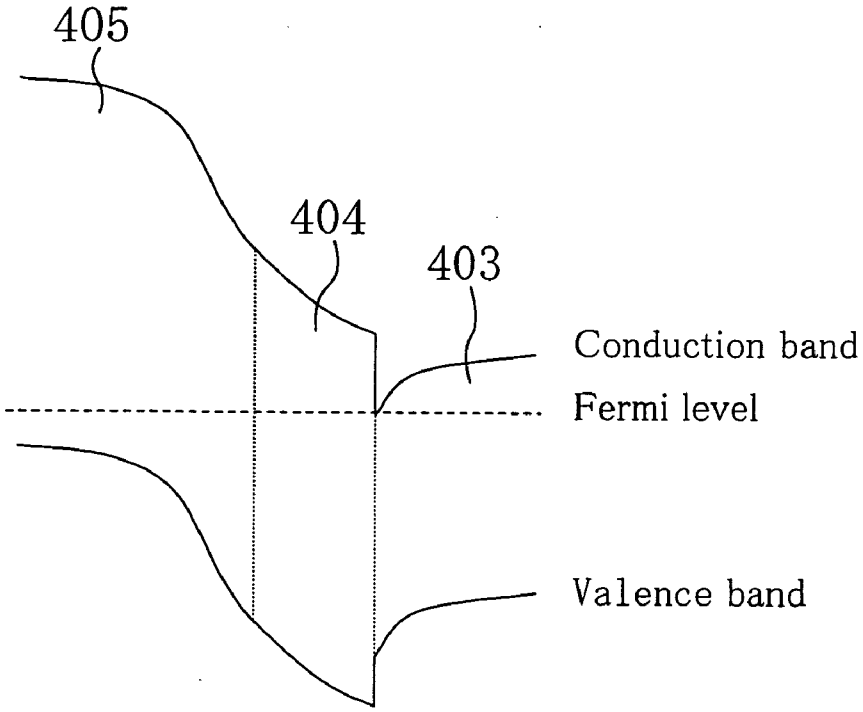
405
404
403
Conduction band
Fermi level
Valence band

FIG. 6A

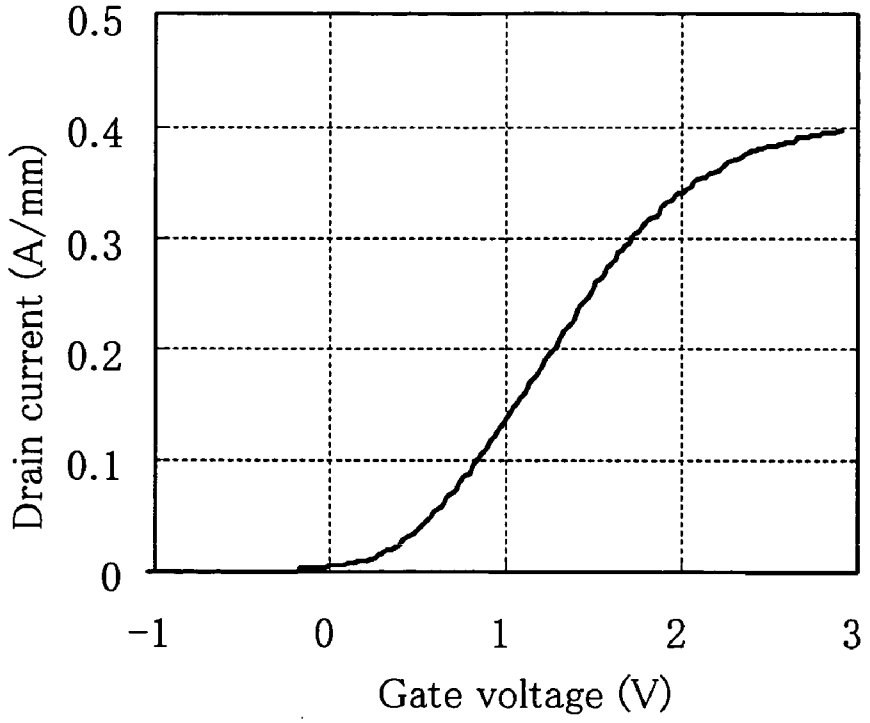
0.5
0.4
0.3
0.2
0.1
0
Drain current (A/mm)
-1
0
1
2
3
Gate voltage (V)

FIG. 6B

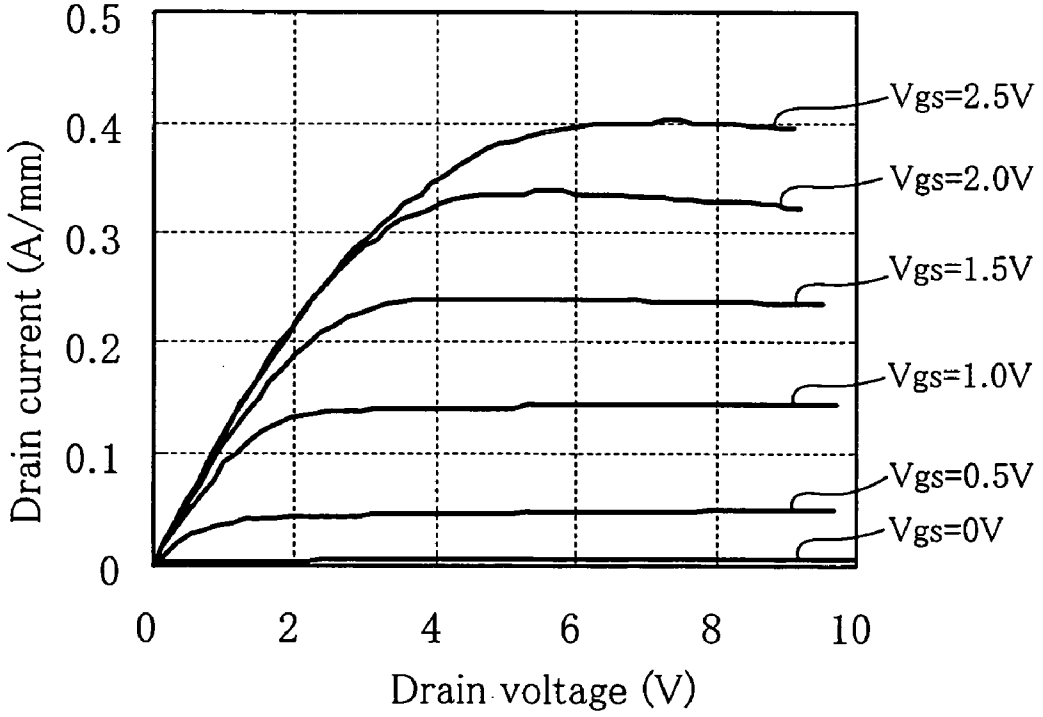
0.5
0.4
0.3
0.2
0.1
0
Drain current (A/mm)
Vgs=2.5V
Vgs=2.0V
Vgs=1.5V
Vgs=1.0V
Vgs=0.5V
Vgs=0V
0
2
4
6
8
10
Drain voltage (V)

FIG. 7

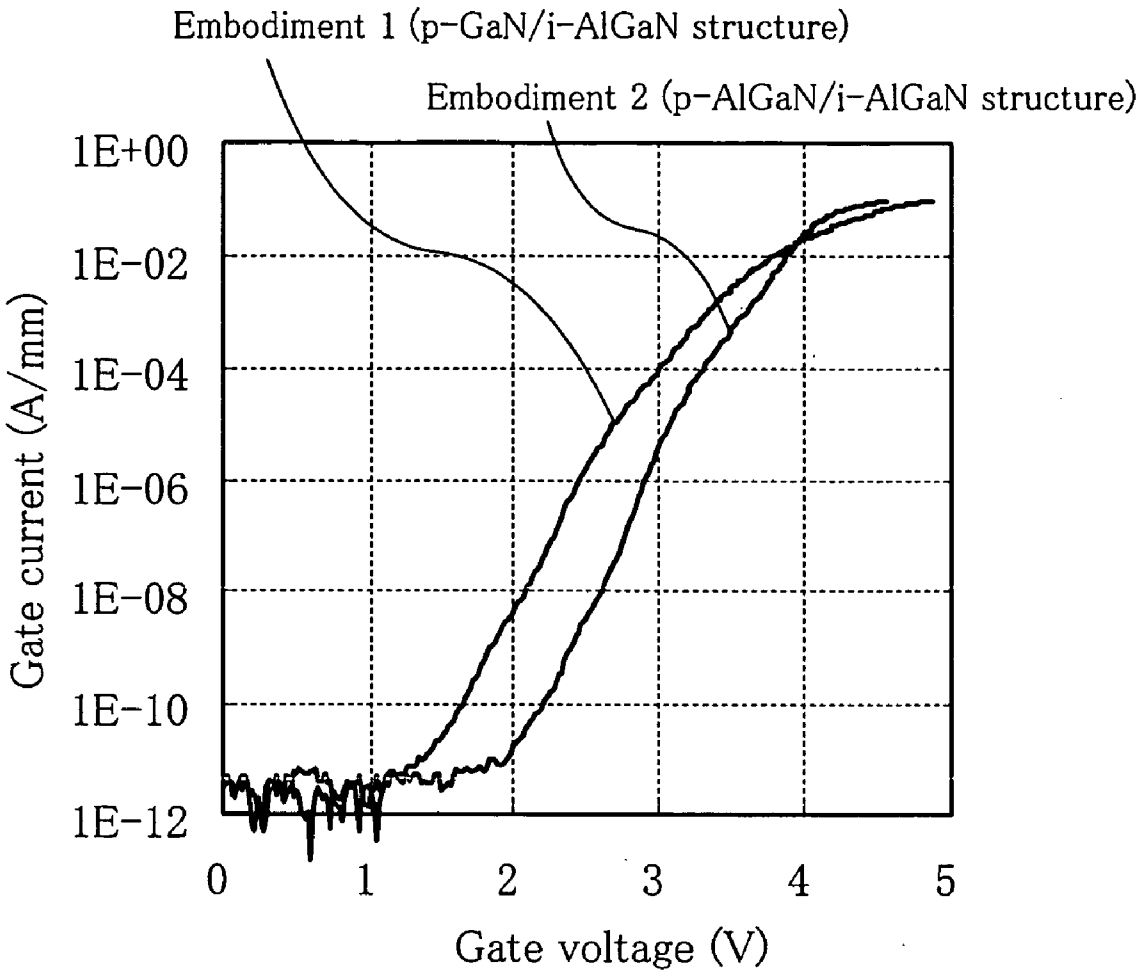
Embodiment 1 (p-GaN/i-AlGaN structure)
Embodiment 2 (p-AlGaN/i-AlGaN structure)
1E+00
1E-02
1E-04
1E-06
1E-08
1E-10
1E-12
Gate current (A/mm)
0
1
2
3
4
5
Gate voltage (V)

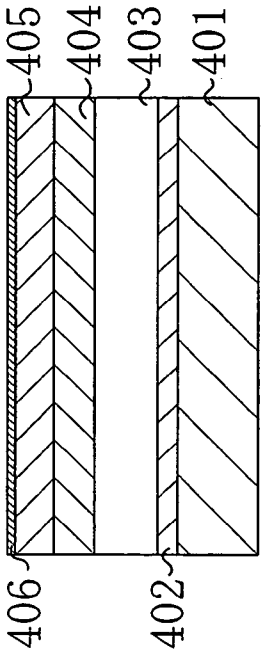

FIG. 8A

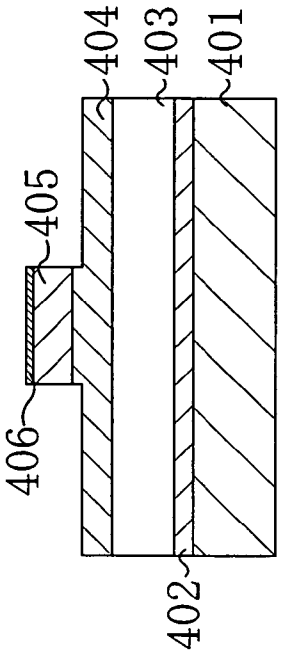

FIG. 8B

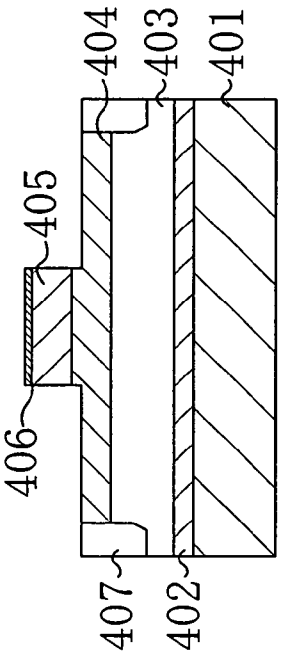

FIG. 8C

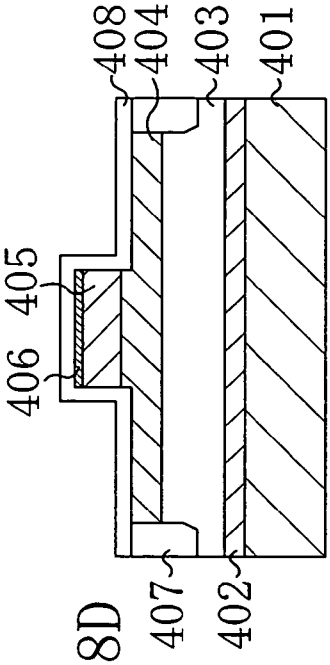

FIG. 8D

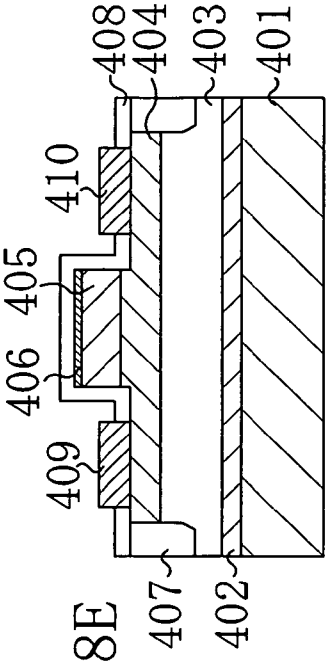

FIG. 8E

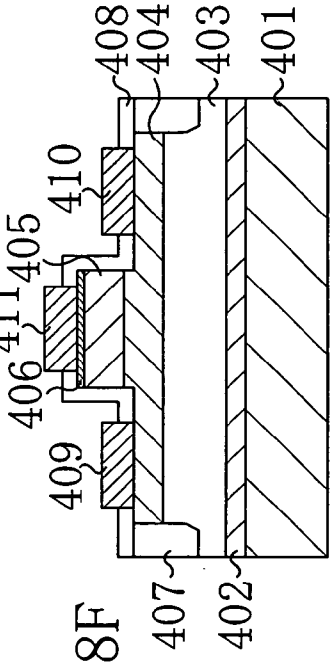

FIG. 8F

FIG. 9

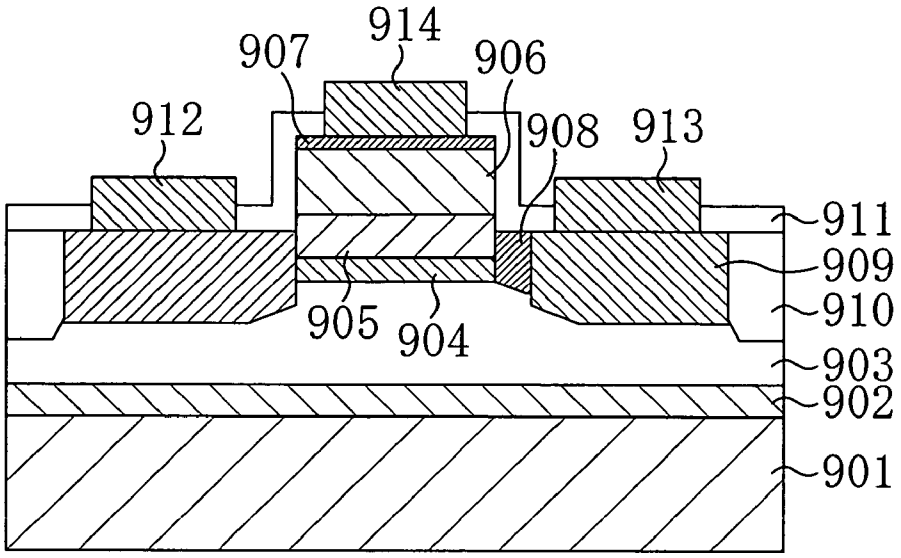
914
907
906
912
908
913
911
909
910
905
904
903
902
901

FIG. 10

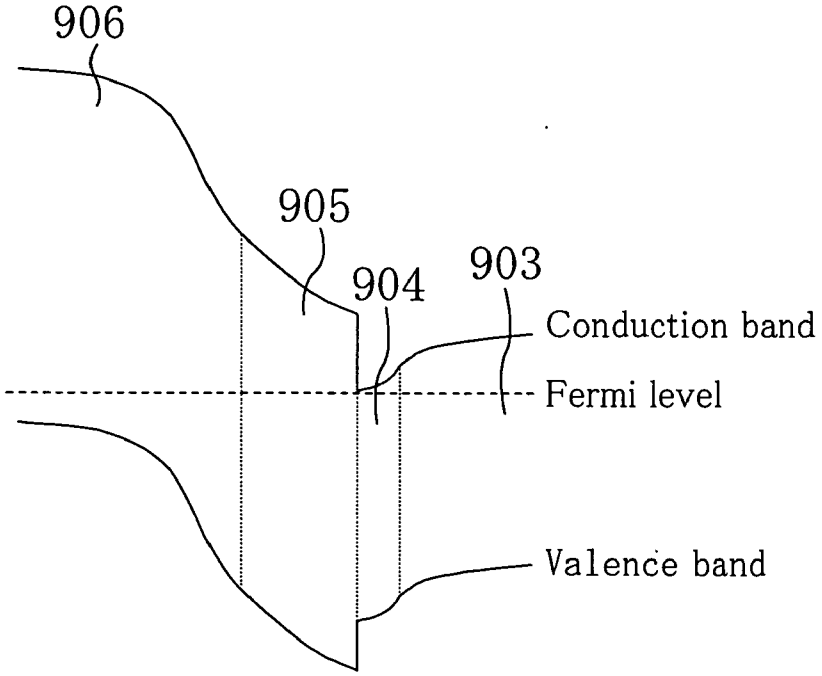
906
905
904
903
Conduction band
Fermi level
Valence band

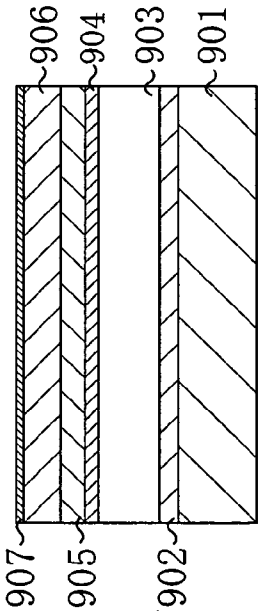

FIG. 11A

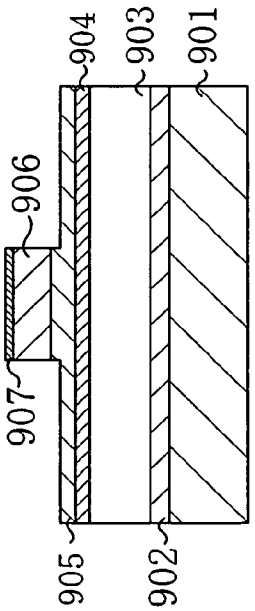

FIG. 11B

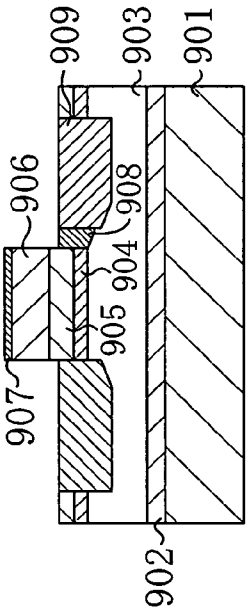

FIG. 11C

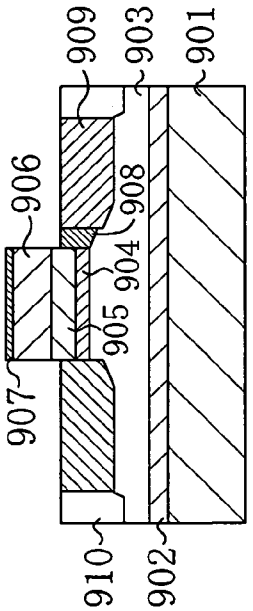

FIG. 11D

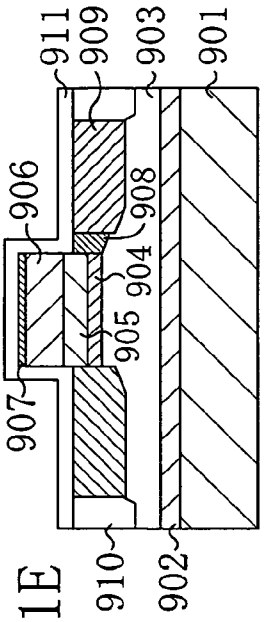

FIG. 11E

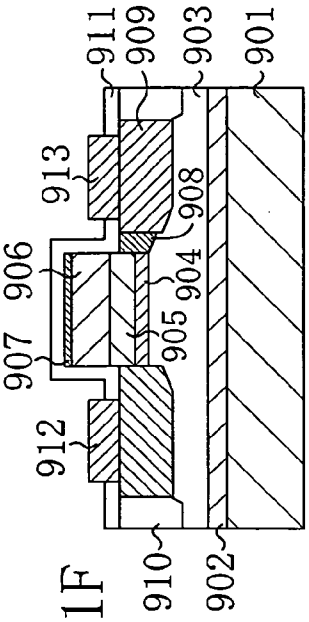

FIG. 11F

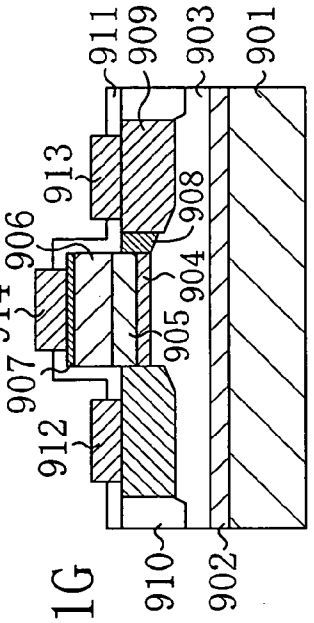

FIG. 11G

FIG. 12

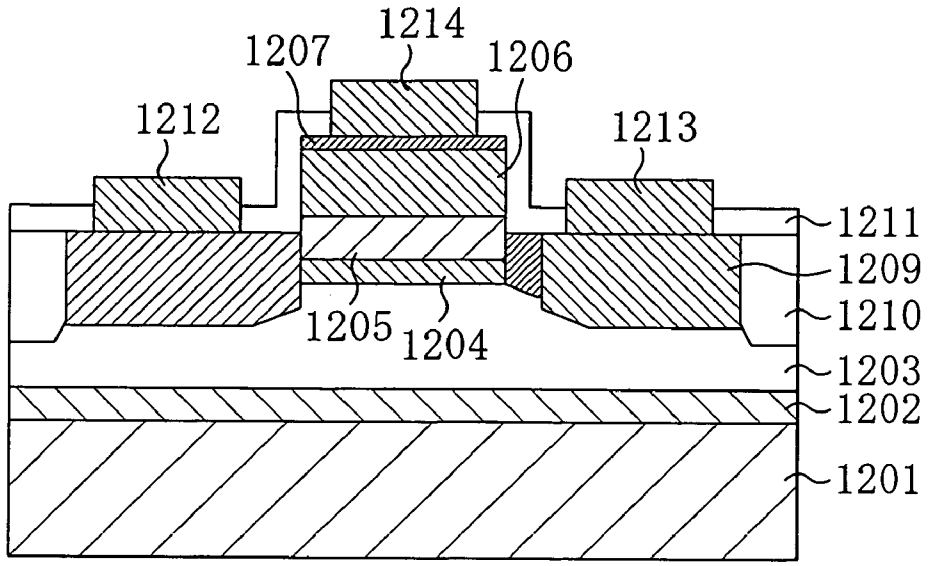
1214
1207
1206
1212
1213
1211
1209
1210
1205
1204
1203
1202
1201

FIG. 13

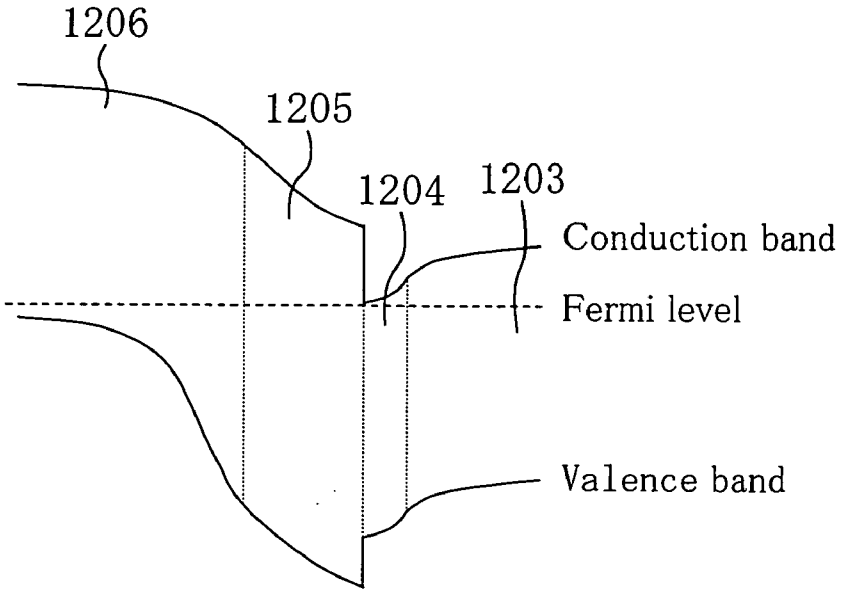
1206
1205
1204
1203
Conduction band
Fermi level
Valence band

FIG. 14

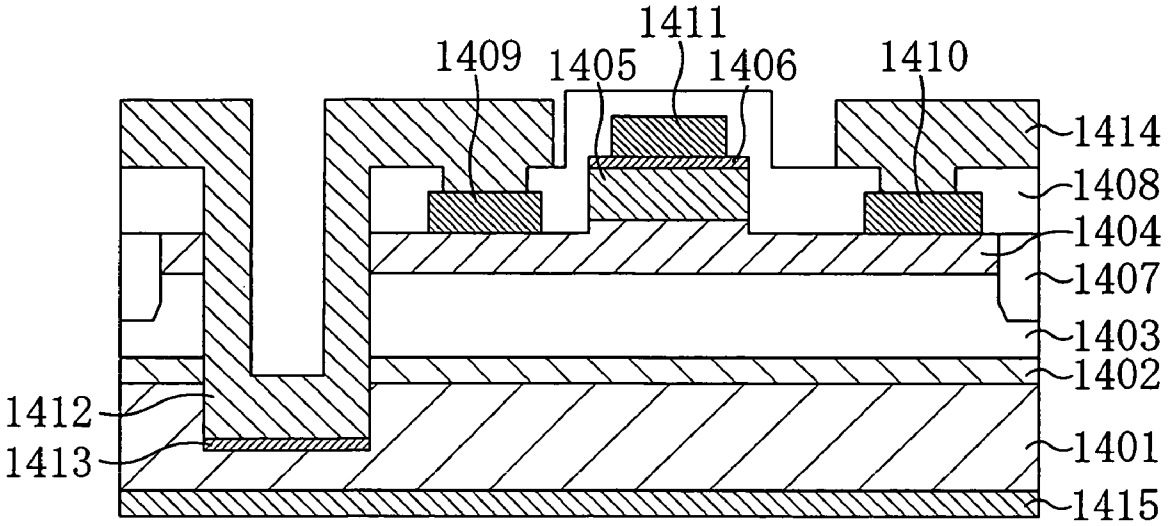

FIG. 15
PRIOR ART

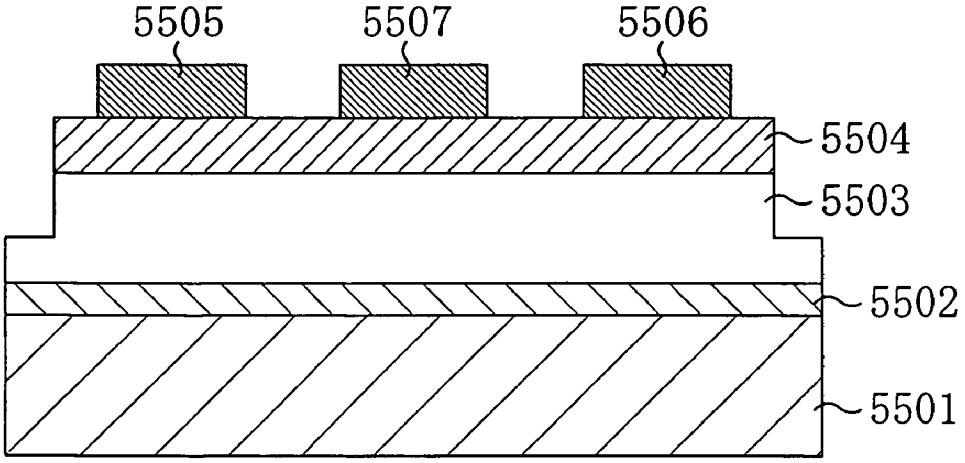

FIELD-EFFECT TRANSISTOR AND METHOD FOR FABRICATING THE SAME

BACKGROUND OF THE INVENTION

[0001] 1. Field of the Invention

[0002] The present invention relates to a field-effect transistor using nitride semiconductor, which is applicable to a power transistor for use in a power supply circuit of a consumer-electronics product such as a TV set and a method for fabricating the field-effect transistor.

[0003] 2. Description of the Prior Art

[0004] Nitride semiconductor is wide gap semiconductor. For example, GaN (gallium nitride) and AlN (aluminum nitride) as examples of nitride semiconductor exhibit band gaps of 3.4 eV and 6.2 eV, respectively, at ambient temperature. An advantage of nitride semiconductor is that it has a larger insulation breakdown electric field and a greater electron saturation drift speed than those of compound semiconductor such as GaAs (gallium arsenide) or Si semiconductor. Nitride semiconductor has another advantage. That is, with nitride semiconductor, in a hetero structure of AlGaN/GaN formed on a substrate with a (0001) plane, electric charges are generated at a hetero interface due to spontaneous polarization and piezoelectric polarization and a sheet carrier concentration of 1×10^{13} cm^{-2} or more can be obtained even in an undoped state. Accordingly, by utilizing a two dimensional electron gas (2DEG) at a hetero interface, a hetero-junction field-effect transistor (HFET) with a large current density can be realized. With this as a background, power transistors using nitride semiconductor exhibiting advantages in increasing output and a breakdown voltage have been currently under active research and development.

[0005] **FIG. 15** is a cross-sectional view of a known field-effect transistor using an AlGaN/GaN hetero structure. In the known field-effect transistor shown in **FIG. 15**, a low temperature GaN buffer layer **5502**, an undoped GaN layer **5503** and an n-type AlGaN layer **5504** are formed in this order over a sapphire substrate **5501**. A source electrode **5505** and a drain electrode **5506** are formed on the n-type AlGaN layer **5504**. Each of the source electrode **5505** and the drain electrode **5506** is formed of a Ti layer and an Al layer on the n-type AlGaN layer **5504**. A gate electrode **5507** is formed of a Ni layer, a Pt layer and an Au layer so as to be located between the source electrode **5505** and the drain electrode **5506**. To provide isolation, part of the n-type AlGaN layer **5504** located in other part than a formation region is removed, for example, by dry etching. The field-effect transistor is a so-called normally ON type FET in which a drain current flows when a gate voltage is 0 V due to a high-concentration two dimensional electron gas generated at the hetero interface between the n-type AlGaN layer **5503** and the undoped GaN layer **5504**.

[0006] However, when a GaN based HFET is applied to a power transistor, if the GaN based HFET is a normally ON type device, a safety problem might arise. For example, a circuit might be broken at the time of power failure, or the like event might be caused. Therefore, in order to make such a device be practically used as a power transistor, a GaN based HFET have to be a so-called normally OFF type FET in which a current does not flow with a gate voltage of 0 V applied. As a device structure which can satisfy the above-described requirements for known GaAs based compound semiconductor, a junction field-effect transistor (JEFT) using a pn junction as a gate has been proposed and also has been already in practical use (see J. K. Abrokwah et al., IEEE Transactions on Electron Devices, vol. 37, no. 6, pp. 1529-1531, 1990). In a JFET structure, a pn junction with a larger built-in potential than that of a Schottky junction is used as a gate and thus a gate turn-on voltage (a voltage at which a gate current starts flowing) can be increased and a gate leakage current can be reduced. In recent years, an example where adoption of the JFET structure for nitride semiconductor is studied has been reported (see L. Zhang et al., IEEE Transactions on Electron Devices, vol. 47, no. 3, pp. 507-511, 2000 and Japanese Laid-Open Publication No. 2004-273486).

SUMMARY OF THE INVENTION

[0007] However, to make the known GaN based HFET be a normally OFF type, an Al composition ratio in the n-type AlGaN layer has to be reduced or a thickness of the n-type AlGaN layer has to be reduced to reduce the amount of polarization charge. Therefore, it has been difficult to obtain a large current density and achieve the GaN based HFET being a normally OFF type at the same time.

[0008] In view of the above-described problems, it is therefore an object of the present invention to provide a field-effect transistor of normally OFF type nitride semiconductor, which is applicable to a power transistor and allows a sufficient large current density, and a method for fabricating the field-effect transistor.

[0009] To solve the above-described problems, a field-effect transistor according to the present invention includes: a substrate; a first nitride semiconductor layer formed above the substrate; a second nitride semiconductor layer which induces the generation of a two dimensional electron gas at an interface with the first nitride semiconductor layer in an ON state, the second nitride semiconductor layer being formed on the first nitride semiconductor layer and having a larger band gap energy than that of the first nitride semiconductor layer; a third nitride semiconductor layer of a p-type conductivity formed on the second nitride semiconductor layer; a gate electrode formed on or above the third nitride semiconductor layer; and source and drain electrodes formed on or above the second nitride semiconductor layer so as to be located on both sides of the gate electrode, respectively, when viewed from the top.

[0010] In this structure, the third nitride semiconductor layer has the p-type conductivity and a two dimensional electron gas is generated in the interface between the first nitride semiconductor layer and the second nitride semiconductor layer in an ON state, so that a pn junction is formed in a gate region. Thus, even though a higher gate voltage than that in the known field-effect transistor is applied to the field-effect transistor of the present invention, a gate leakage current hardly flows therein and a large drain current can be achieved. In this case, the gate electrode is preferably an Ohmic electrode.

[0011] The field-effect transistor of the present invention can be made to be a normally OFF type. Specifically, if the second nitride semiconductor layer is an undoped layer, a normally OFF type HFET can be realized in a simple manner.

[0012] In one embodiment of the present invention, part of the second nitride semiconductor layer located immediately below the gate electrode has a larger thickness than that of parts of the second nitride semiconductor layer located immediately below the source and drain electrodes. Thus, a region where electric fields concentrate in an ON state is located in the second nitride semiconductor layer, so that a breakdown voltage can be largely improved.

[0013] A method for fabricating a field-effect transistor according to the present invention includes the steps of: a) epitaxially growing a first nitride semiconductor layer, a second nitride semiconductor layer and a p-type third nitride semiconductor layer in this order above a substrate; b) selectively removing part of the third nitride semiconductor layer and part of an upper portion of the second nitride semiconductor layer and generating a two dimensional electron gas in part of an interface between the first and second nitride semiconductor layers located immediately below a region from which each of the parts of the second and third nitride semiconductor layers has been removed; c) forming a source electrode and a drain electrode so that each of the source electrode and the drain electrode is located on a region of the second nitride semiconductor layer from which the part of the upper portion thereof have been removed in the step b), respectively; and d) forming a gate electrode on or above the third nitride semiconductor layer.

[0014] Using this method, a field-effect transistor in which a two dimensional electron gas is generated in part of an interface between the first and second nitride semiconductor layers located below each of a source electrode and a drain electrode and a two dimensional electron gas is not generated in a region located below the gate electrode can be fabricated. Specifically, according to the method of the present invention, a large current can be achieved in an ON state and also a normally OFF type field-effect transistor can be fabricated. In a field-effect transistor fabricated according to the method of the present invention, a pn junction is formed in a gate region, so that even though a large voltage is applied to the gate electrode, a gate leakage current is hardly generated. Therefore, a larger ON current than that in the known field-effect transistor can be obtained.

[0015] As described above, in the field-effect transistor of the present invention, a gate turn-on voltage can be made to be at a large value corresponding to a band gap of a semiconductor, so that a large drain current can be obtained. Also, a field-effect transistor with a small gate leakage current can be realized. Moreover, an n-type impurity is selectively introduced into parts of a nitride semiconductor layer located under a source electrode and a drain electrode, respectively, so that a source resistance and a drain resistance can be reduced. Thus, a field-effect transistor with a small series resistance can be realized. Furthermore, by forming two or more n-type regions having different impurity concentrations between the gate electrode and the drain electrode, when a high voltage is applied to the drain electrode, a depletion layer extends in an n-type region having a lower impurity concentration, so that a breakdown voltage is increased.

BRIEF DESCRIPTION OF THE DRAWINGS

[0016] **FIG. 1** is a cross-sectional view of a field-effect transistor according to a first embodiment of the present invention.

[0017] **FIG. 2A** is an energy band diagram of a vertical section in a gate region of the field-effect transistor of the first embodiment. **FIG. 2B** is an energy band diagram of a vertical section in a region located between the gate region and the source region in the field-effect transistor of the first embodiment.

[0018] **FIGS. 3A and 3B** are graphs showing the relationship between gate voltage and drain current and the relationship between drain current and drain voltage in the field-effect transistor of the first embodiment, respectively.

[0019] **FIG. 4** is a cross-sectional view of a field-effect transistor according to a second embodiment of the present invention.

[0020] **FIG. 5** is an energy band diagram of a vertical section in a gate region of the field-effect transistor of the second embodiment.

[0021] **FIGS. 6A and 6B** are graphs showing the relationship between gate voltage and drain current and the relationship between drain current and drain voltage in the field-effect transistor of the second embodiment, respectively.

[0022] **FIG. 7** is a graph showing current-voltage characteristics with respect to current flowing in the forward direction between gate and source in the field-effect transistors of the first and second embodiments of the present invention.

[0023] **FIGS. 8A through 8F** are cross-sectional views illustrating respective steps for fabricating the field-effect transistor of the second embodiment.

[0024] **FIG. 9** is a cross-sectional view of a field-effect transistor according to a third embodiment of the present invention.

[0025] **FIG. 10** is an energy band diagram of a vertical section in a gate region of the field-effect transistor of the third embodiment.

[0026] **FIGS. 11A through 11G** are cross-sectional views illustrating respective steps for fabricating the field-effect transistor of the third embodiment.

[0027] **FIG. 12** is a cross-sectional view illustrating a field-effect transistor according to a fourth embodiment of the present invention.

[0028] **FIG. 13** is an energy band diagram of a vertical section in a gate region of the field-effect transistor of the fourth embodiment.

[0029] **FIG. 14** is a cross-sectional view of a field-effect transistor according to a fifth embodiment of the present invention.

[0030] **FIG. 15** is a cross-sectional view of a known field-effect transistor using an AlGaN/GaN hetero structure.

DESCRIPTION OF THE PREFERRED EMBODIMENTS

[0031] Hereafter, embodiments of the present invention will be described with reference to the accompanying drawings.

First Embodiment

[0032] **FIG. 1** is a cross-sectional view of a field-effect transistor according to a first embodiment of the present invention.

[0033] As shown in **FIG. 1**, the field-effect transistor of this embodiment includes a sapphire substrate **101**, an AlN buffer layer **102** formed on the sapphire substrate **101** so as to have a thickness of 100 nm, an undoped GaN layer **103** formed on the AlN buffer layer **102** so as to have a thickness of 2 μm, an undoped AlGaN layer **104** formed on the undoped GaN layer **103** so as to have a thickness of 25 nm, a p-type GaN layer **105** formed on part of the undoped AlGaN layer **104** so as to have a thickness of 100 nm, and a heavily doped p-type GaN layer **106** formed on the p-type GaN layer **105** so as to contain a p-type impurity at a higher concentration than that of the p-type GaN layer **105** and have a thickness of 5 nm. Herein, "undoped" means a state in which an impurity is not intentionally doped. In the field-effect transistor of this embodiment, the undoped AlGaN layer **104** is formed of, for example, undoped $Al_{0.25}Ga_{0.75}N$.

[0034] On the heavily doped p-type GaN layer **106**, provided is a gate electrode **111** of Pd (palladium) which forms an ohmic junction with the heavily doped layer GaN layer **106**. An SiN film **108** having openings is provided over the undoped AlGaN layer **104** as well as side surfaces of the p-type GaN layer **105** and side and upper surfaces of the heavily doped p-type GaN layer **106**. A source electrode **109** and a drain electrode **110**, each of which is formed of a Ti layer and an Al layer, are formed on parts of the AlGaN layer **104** corresponding to the openings of the SiN film **108** so that the p-type GaN layer **105** is located between the source electrode **109** and the drain electrode **110**. Moreover, assume that a region of the substrate in which a field-effect transistor is formed is called "device formation region". Then, an isolation region **107** is provided so as to surround a device formation region.

[0035] Parts of the heavily doped p-type GaN layer **106** and the p-type GaN layer **105** located in other part than a gate region is removed by selective etching. Part of the undoped AlGaN layer **104** is also removed by selective etching and a thickness of the undoped AlGaN layer **104** is larger in the gate region than in other part thereof. Each of the source electrode **109** and the drain electrode **110** is formed on the undoped AlGaN layer **104** of which part has been etched. In this manner, a contact face between the undoped AlGaN layer **104** and each of the source electrode and the drain electrode is located lower than a hetero interface between the p-type GaN layer **105** and the undoped AlGaN layer **104** in the gate region, so that a lower edge of a gate step at which a field intensity becomes maximum when a high drain voltage is applied is located in the AlGaN layer having a large band gap. Therefore, compared to the case where the entire upper surface of the undoped AlGaN layer **104** is flat, a breakdown voltage between the gate and drain electrodes can be improved. Even when the upper surface of the undoped AlGaN layer **104** is flat and the p-type GaN layer **105** having a small thickness is interposed between the undoped AlGaN layer **104** and each of the source electrode **109** and the drain electrode **110**, the field-effect transistor of the present invention can be operated as a transistor without any problem. Moreover, part of the undoped AlGaN layer **104** which is in contact with the source electrode **109** and the drain electrode **110** has a smaller thickness than that of part of the undoped AlGaN layer **104** located in the gate region, and accordingly, a distance between a two dimensional electron gas and each of the source electrode **109** and the drain electrode **110** is small. Thus, an ohmic contact resistance at the interface between the undoped AlGaN layer **104** and each of the source electrode **109** and the drain electrode **110** can be reduced. However, if the thickness of the part of the undoped AlGaN layer **104** with which the source and drain electrodes are in contact becomes too small, a channel resistance between the gate and source electrodes or between the gate and drain electrodes is increased. Therefore, the undoped AlGaN layer **104** preferably has a thickness of about 10 nm or more.

[0036] The isolation region **107** is formed, for example, by performing ion implantation of B (boron) into parts of the undoped AlGaN layer **104** and the undoped GaN layer **103** so that a resistance thereof is increased. Thus, a step between the device formation region and the isolation region **107** is not created. In the known field-effect transistor of **FIG. 15**, when steps are created by dry etching for the purpose of isolating one device from another, crystal defects are generated due to etching. This causes the generation of a leakage current through the crystal defects in the steps. In contrast, in the field-effect transistor of this embodiment, leakage current between the source and the drain and leakage current between devices are largely reduced.

[0037] In a GaN based HFET, a so-called current collapse in which when a drain voltage is increased, a drain current is reduced is a problem in many cases. However, in the field-effect transistor of this embodiment, an upper surface of the transistor is covered with the SiN film **108**, except for part of the source, drain and gate electrodes, so that a surface level is reduced and the generation of current collapse is suppressed.

[0038] To suppress the expansion of a depletion layer into the p-type GaN layer **105**, a carrier concentration in the p-type GaN layer **105** is preferably 1×10^{18} cm^{-3} or more. In the field-effect transistor of this embodiment, the carrier concentration in the p-type GaN layer **105** is set to be 1×10^{18} cm^{-3}. Thus, in the field-effect transistor of this embodiment, the concentration of a two dimensional electron gas generated at the interface between the undoped AlGaN layer **104** and the undoped GaN layer **103** is about 1×10^{13} cm^{-2}. With the carrier concentration in the p-type GaN layer **105** having a thickness of 100 nm set to be 1×10^{18} cm^{-3}, the two dimensional electron gas generated at the interface between the undoped AlGaN layer **104** and the undoped GaN layer **103** can be cancelled out, so that the field-effect transistor can be made to be a normally OFF type. In this case, if the number of carries per sheet in the p-type GaN layer **105** is equal to or larger than the number of electrons of the two dimensional electron gas, the two dimensional electron gas can be cancelled out. In order to adjust the field-effect transistor to make it be a normally OFF type, besides adjusting the concentration of an impurity, the thickness of the undoped AlGaN layer **104** may be adjusted.

[0039] The field-effect transistor of this embodiment is characterized in that the gate electrode **111** forms an Ohmic contact with the heavily doped p-type GaN layer **106** and thus a pn junction is formed by a two dimensional electron gas and p-type GaN layer **105** at an interface between the

undoped AlGaN layer **104** and an undoped GaN layer **103**. Since a pn junction barrier is larger than a Schottky junction barrier, even with a higher gate voltage than that in the known field-effect transistor applied, gate leakage is hardly caused in the field-effect transistor.

[**0040**] In the field-effect transistor of this embodiment, the heavily doped p-type GaN layer **106** having a small thickness is provided under the gate electrode **111**, so that an Ohmic contact can be easily formed between the heavily doped p-type GaN layer **106** and the gate electrode **111**. In general, p-type GaN based semiconductor less likely to form an Ohmic contact, compared to p-type GaAs based semiconductor. Therefore, it is not necessary that the heavily doped p-type GaN layer **106** is provided but it is preferable that the heavily doped p-type GaN layer **106** is provided. A material having a large work function is preferable for a gate electrode. For example, besides Pd, Ni and the like can be used.

[**0041**] **FIG. 2A** is an energy band diagram of a vertical section in a gate region of the field-effect transistor of this embodiment. **FIG. 2B** is an energy band diagram of a vertical section of a region located between the gate region and the source region in the field-effect transistor of this embodiment.

[**0042**] As shown in **FIGS. 2A and 2B**, at the hetero interface between the undoped AlGaN layer and the undoped GaN layer, i.e., an undoped layer-to-undoped layer junction, a well is formed in a conduction band due to charges generated by spontaneous polarization and piezoelectric polarization. As shown in **FIG. 2B**, in other device regions than the gate region, the p-type GaN layer **105** is not connected onto the undoped AlGaN layer **104**, so that a well in this conductive band is located lower than a fermi level and a two dimensional electron gas is formed even in a state where a gate voltage is not applied. However, in the gate region, as shown in **FIG. 2A**, the p-type GaN layer **105** is connected to the undoped AlGaN layer **104**. Thus, the respective energy levels of the undoped AlGaN layer **104** and the undoped GaN layer **103** are raised, so that a well in a conduction band at the hetero interface between the undoped AlGaN layer **104** and the undoped GaN layer **103** is formed substantially at the same location as that of the fermi level. As a result, when a bias is not applied to the gate electrode, a two dimensional electron gas is not formed in the gate region, so that the field-effect transistor is becomes normally OFF state. As described above, a two dimensional electron gas is generated in other device formation regions than the gate region, so that a large current flows between the source and the drain when a positive bias is applied.

[**0043**] Moreover, when a positive bias is applied to the gate electrode, the larger a band gap of semiconductor used for the transistor is, the larger a value for a gate voltage (gate turn-on voltage) at which a gate current starts flowing becomes. As the gate turn-on voltage becomes larger, a larger positive bias can be applied to the gate electrode. Therefore, the value for the gate voltage is preferably large. When GaAs or like semiconductor is used, the gate turn-on voltage is about 1 V. In the present invention in which GaN based semiconductor is used, the value of the gate turn-on voltage corresponds to a band gap of the semiconductor and thus is a large value.

[**0044**] **FIGS. 3A and 3B** are graphs showing the relationship between gate voltage and drain current and the relationship between drain current and drain voltage in the field-effect transistor of this embodiment, respectively. As seen in **FIG. 3A**, in the field-effect transistor of the present invention, a threshold voltage is about 0 V and a normally OFF state is realized. Also, since the gate turn-on voltage is large, almost no gate leakage current flows even with a positive bias of 2 V applied to the gate electrode **111** and, as shown in **FIG. 3B**, a maximum drain current of 300 mA/mm or more can be achieved.

[**0045**] In the description above, an example where with the (0001) plane of the sapphire substrate **101**, a field-effect transistor is formed has been shown. However, for example, a field-effect transistor may be formed on a (10-12) plane (R plane) of the sapphire substrate. In such a case, a polarization electric field is not generated in the direction in which nitride semiconductor grows and the sheet carrier concentration of a two electron gas can be controlled in a simple manner, so that a normally OFF type field-effect transistor can be fabricated in a simple manner. Specifically, to obtain a larger positive value for the threshold voltage, a field-effect transistor is not formed on the (0001) plane (i.e., c plane) of the sapphire substrate **101** but a field-effect transistor is preferably formed using a substrate with which a nonpolar property can be achieved. Also, at the same time, an n-type AlGaN layer may be provided, instead of the undoped AlGaN layer **104**.

[**0046**] As a field-effect transistor according to this embodiment, an example where the undoped AlGaN layer **104** is formed of $Al_{0.25}Ga_{0.75}N$ has been described. However, the composition ratio between Al and Ga is not limited thereto. An undoped AlN layer may be provided, instead of the undoped AlGaN layer **104**. In such a case, since a band diagram varies when the composition of the undoped AlGaN layer **104** is changed, a film thickness, an impurity concentration and the like for each layer need to be adjusted so that a threshold becomes 0 V or more.

Second Embodiment

[**0047**] **FIG. 4** is a cross-sectional view of a field-effect transistor according to a second embodiment of the present invention.

[**0048**] As shown in **FIG. 4**, the field-effect transistor of this embodiment includes a sapphire substrate **401**, an AlN buffer layer **402** formed on the sapphire substrate **401** so as to have a thickness of 100 nm, an undoped GaN layer **403** formed of the AlN buffer layer **402** so as to have a thickness of 2 μm, an undoped AlGaN layer **404** formed on the undoped GaN layer **403** so as to have a thickness of 25 nm, a p-type AlGaN layer **405** formed on part of the undoped AlGaN layer **404** so as to have a thickness of 100 nm, and a heavily doped p-type GaN layer **406** formed on the p-type AlGaN layer **405** so as to have a thickness of 5 nm. The field-effect transistor of this embodiment further includes a gate electrode **411** formed of Pd which forms an Ohmic contact with the heavily doped p-type GaN layer **406**, a source electrode **409** and a drain electrode **410** each of which forms an Ohmic contact with the undoped AlGaN layer **404** and is formed of a Ti layer and an Al layer, and a SiN film **408**. A device formation region is electrically isolated from adjacent devices by an isolation region **407**.

[**0049**] The field-effect transistor of this embodiment is different from the field-effect transistor of the first embodi-

ment in that the p-type AlGaN layer **405** is provided, instead of the p-type GaN layer **105**. Other than that, the field-effect transistor of this embodiment has the same structure as that of the first embodiment. The p-type AlGaN layer **405** is formed of a material having the same composition as that of the undoped AlGaN layer **404**. For example, the p-type AlGaN layer **405** is formed of $Al_{0.25}Ga_{0.75}N$.

[0050] **FIG. 5** is an energy band diagram of a vertical section in a gate region of the field-effect transistor of this embodiment.

[0051] As shown in **FIG. 5**, in the field-effect transistor of this embodiment, the p-type AlGaN layer **405** and the undoped AlGaN layer **404** are formed of the same material. Thus, band discontinuity does not occur in an interface between the two layers. Compared to this, in the field-effect transistor of the first embodiment shown in **FIG. 2**, band discontinuity occurs at a hetero interface between the p-type GaN layer and the undoped AlGaN layer. Therefore, the field-effect transistor of this embodiment is made to have a structure in which holes are not stored at the interface between the p-type AlGaN layer **405** and the undoped AlGaN layer and the generation of a gate leakage current due to inter-band band tunneling is more reliably suppressed, compared to the first embodiment. As a result, in the field-effect transistor of this embodiment, the gate turn-on voltage is higher than that of field-effect transistor of the first embodiment.

[0052] In **FIG. 5**, an example where a composition ratio in the p-type AlGaN layer **405** is made to be the same as that of the undoped AlGaN layer has been described. However, a p-type nitride semiconductor layer having a larger band gap than that of the undoped AlGaN layer **404** may be provided, instead of the p-type AlGaN layer **405**. In such a case, band discontinuity occurs at the hetero interface between the undoped AlGaN layer **404** and the p-type AlGaN layer **405**. However, a potential energy of a valence band of the p-type AlGaN layer **405** becomes smaller in the direction toward the undoped AlGaN layer **404**, so that holes are not stored around the interface between the undoped AlGaN layer **404** and the p-type AlGaN layer **405**.

[0053] **FIGS. 6A and 6B** are graphs showing the relationship between gate voltage and drain current and the relationship between drain current and drain voltage in the field-effect transistor of this embodiment, respectively. As shown in **FIG. 6A**, a threshold voltage is about 0 V and a normally OFF state is realized. As shown in **FIG. 6B**, a gate leakage current is hardly generated, so that in the field-effect transistor of this embodiment, even when a gate-source voltage Vgs is increased to 2.5 V, the field-effect transistor can be operated without generating a gate leakage current.

[0054] **FIG. 7** is a graph showing current-voltage characteristics with respect to a current flowing in the forward direction between gate and source in each of the field-effect transistors of the first and second embodiments of the present invention. Results shown in **FIG. 7** indicate that the gate turn-on voltage is larger in the field-effect transistor of the second embodiment than in the field-effect transistor of the first embodiment. Accordingly, in the field-effect transistor of this embodiment, a large positive bias can be applied by the gate electrode, so that a larger drain current can be achieved than in the field-effect transistor of the first embodiment.

[0055] Next, an exemplary method for fabricating the field-effect transistor of the present invention shown in **FIG. 4** will be described. **FIGS. 8A through 8F** are cross-sectional views illustrating respective steps for fabricating the field-effect transistor of this embodiment.

[0056] First, as shown in **FIG. 8A**, an AlN buffer layer **402** having a thickness of 100 nm, an undoped GaN layer **403** having a thickness of 2 μm, an undoped AlGaN layer **404** having a thickness of 25 nm, a p-type AlGaN layer **405** having a thickness of 100 nm, and a heavily doped p-type GaN layer **406** having a thickness of 5 nm are formed in this order on a (0001) plane of a sapphire substrate **401** by metal organic chemical vapor deposition (MOCVD).

[0057] Next, as shown in **FIG. 8B**, parts of the heavily doped p-type GaN layer **406**, the p-type AlGaN layer **405** and an upper portion of the undoped AlGaN layer **404** located in other part than the gate region are selectively removed, for example, by dry etching such as ICP (inductive-coupled plasma) etching.

[0058] Next, as shown in **FIG. 8C**, with a device formation region covered with a photoresist, for example, B (boron) is ion-implanted to increase a resistance in parts of the undoped AlGaN layer **404** and the undoped GaN layer **403**. Thus, an isolation region **407** is formed.

[0059] Subsequently, as shown in **FIG. 8D**, chemical vapor deposition (CVD) is performed using SiH_4, NH_3 and N_2, thereby forming a SiN film **408** having a thickness of 100 nm.

[0060] Next, as shown in **FIG. 8E**, openings are formed in a SiN film, for example, by ICP dry etching or the like. Each of a source electrode **490** and a drain electrode **410** is formed of a Ti layer and an Al layer in an associated one of the openings, and then heat treatment is performed thereto in an N_2 atmosphere at 650° C.

[0061] Next, as shown in **FIG. 8F**, part of the SiN film **408** provided on the heavily doped p-type GaN layer **406** is removed, for example, by ICP dry etching or the like. Subsequently, a gate electrode **411** of Pd is formed in an associated one of the openings in the SiN film **408**. The source electrode **409**, the drain electrode **410** and the gate electrode **411** may be formed before formation of the SiN film **408**. The isolation region **407** may be formed after formation of the source electrode **409**, the drain electrode **410** and the gate electrode **411**. In the above-described manner, the field-effect transistor of this embodiment can be fabricated.

Third Embodiment

[0062] **FIG. 9** is a cross-sectional view of a field-effect transistor according to a third embodiment of the present invention.

[0063] As shown in **FIG. 9**, the field-effect transistor of this embodiment includes a sapphire substrate **901**, an AlN buffer layer **902** formed on the sapphire substrate **901** so as. to have a thickness of 100 nm, an undoped GaN layer **903** formed on the AlN buffer layer **902** so as to have a thickness of 2 μm, an n-type GaN layer **904** formed on the undoped GaN layer **903** so as to have a thickness of 5 nm, an undoped AlGaN layer **905** formed on the n-type GaN layer **904** so as to have a thickness of 20 nm, a p-type AlGaN layer **906**

formed on the undoped AlGaN layer **905** so as to have a thickness of 100 nm, and a heavily doped p-type GaN layer **907** formed on the p-type AlGaN layer **906** so as to have a thickness of 5 nm. The field-effect transistor of this embodiment further includes heavily doped n-type regions **909** defined in parts located at both sides of the n-type GaN layer **904**, respectively, and on the undoped GaN layer **903** and containing an n-type impurity at a higher concentration than that of the n-type GaN layer **904**, a lightly doped n-type region **908** defined in part located between each of the n-type GaN layer **904** and the undoped AlGaN layer **905** and one of the heavily doped regions **909** (drain region) and containing an n-type impurity at a lower concentration than that of the heavily doped n-type region **909**, and a source electrode **912** and a drain electrode **913** formed of Ti/Al and provided on the heavily doped n-type regions **909**, respectively. In the field-effect transistor of this embodiment, as in the field-effect transistors of the first and second embodiments, an isolation region **910**, a gate electrode **914** formed of Pd, and a SiN film **911** are provided.

[**0064**] In the field-effect transistor of this embodiment, since the heavily doped n-type regions **909** are formed by Si ion implantation, Ohmic contact resistances generated between the source electrode **912** and one of the heavily doped regions **909** and between the drain electrode **913** and the other of the heavily doped regions **909** are largely reduced, so that a source resistance and a drain resistance are small. Therefore, the field-effect transistor of this embodiment is a normally OFF type and, at the same time, allows a large current flowing therein when it is operated. Moreover, power consumption is reduced, compared to the known field-effect transistor. To sufficiently reduce ohmic contact resistances, a carrier concentration of the heavily doped n-type region is preferably 2×10^{18} cm^{-3}or more.

[**0065**] A carrier concentration of the lightly doped n-type region **908** is, for example, about 1×10^{17} cm^{-3}. The lightly doped n-type region **908** is formed in part located between each of the n-type GaN layer **904** and the undoped AlGaN layer **905** and one of the heavily doped regions **909** located in the drain electrode side, so that concentration of electric fields in the heavily doped n-type region on the drain side caused when a high voltage is applied to the drain electrode can be prevented. Thus, a breakdown voltage can be increased.

[**0066**] **FIG. 10** is an energy band diagram of a vertical section in a gate region of the field-effect transistor of this embodiment.

[**0067**] As shown in **FIG. 10**, in the field-effect transistor of this embodiment, an n-type GaN layer **904** for functioning as a channel is inserted between the undoped GaN layer **903** and the undoped AlGaN layer **905**. Therefore, the width of a well in a conduction band at a hetero interface between the undoped AlGaN layer **905** and the n-type GaN layer **904** in which carriers travel is greater than that in the case where the n-type GaN layer **904** is not inserted. Accordingly, a channel resistance when a positive bias is applied to the gate electrode **914** and the field-effect transistor is turned ON becomes small, so that a large drain current can be taken out.

[**0068**] Next, an exemplary method for fabricating the field-effect transistor of this embodiment shown in **FIG. 9** will be described. **FIGS. 11A through 11G** are cross-sectional views illustrating respective steps for fabricating the field-effect transistor of this embodiment.

[**0069**] First, as shown in **FIG. 11A**, an AlN buffer layer **902** having a thickness of 100 nm, an undoped GaN layer **903** having a thickness of 2 μm, an n-type GaN layer **904** having a thickness of 5 nm, an undoped AlGaN layer **905** having a thickness of 20 nm, a p-type AlGaN layer **906** having a thickness of 100 nm, and a heavily doped p-type GaN layer **907** having a thickness of 5 nm are formed in this order on a (0001) plane of a sapphire substrate **901** by MOCVD.

[**0070**] Next, as shown in **FIG. 11B**, parts of the heavily doped p-type GaN layer **907**, the p-type AlGaN layer **906** and an upper portion of the undoped AlGaN layer **905** located in other part than the gate region are selectively removed, for example, by dry etching such as ICP etching.

[**0071**] Next, as shown in **FIG. 11C**, Si ions are implanted in regions of the substrate located on the both sides of the gate region, respectively, and then an impurity is activated by heat treatment in an N_2 atmosphere. Thus, a lightly doped n-type region **908** and a heavily doped n-type region **909** are formed.

[**0072**] Subsequently, as shown in **FIG. 11D**, for example, B (boron) is ion-implanted in parts of the undoped AlGaN layer **905**, the n-type GaN layer **904** and the undoped GaN layer **903** to increase a resistance therein. Thus, an isolation region **910** is formed.

[**0073**] Next, as shown in **FIG. 11E**, CVD is performed using SiH_4, NH_3 and N_2, thereby forming a SiN film **911** having a thickness of 100 nm on the substrate.

[**0074**] Next, as shown in **FIG. 11F**, part of the SiN film **911** located on the heavily doped n-type region **909** is removed, for example, by ICP dry etching or the like. Subsequently, each of a source electrode **912** and a drain electrode **913** is formed of a Ti layer and an Al layer in an associated one of openings in the SiN film **911**, and then heat treatment is performed thereto in an N_2 atmosphere at 650° C.

[**0075**] Next, as shown in **FIG. 11G**, part of the SiN film **911** located on the heavily doped p-type GaN layer **907** is removed, for example, by ICP dry etching or the like. Subsequently, a gate electrode **914** is formed of Pd in an associated one of the openings in the SiN film **911**. In this embodiment, a method for forming the SiN film **911** is formed before formation of the electrodes has been described. However, the SiN film **911** may be formed after formation of the electrodes. In the above-described manner, the field-effect transistor of this embodiment can be fabricated.

Fourth Embodiment

[**0076**] **FIG. 12** is a cross-sectional view illustrating a field-effect transistor according to a fourth embodiment of the present invention. As shown in **FIG. 12**, the field-effect transistor of this embodiment includes a sapphire substrate **1201**, an AlN buffer layer **1202** having a thickness of 100 nm, an undoped GaN layer **1203** having a thickness of 2 μm, an n-type GaN layer **1204** having a thickness of 5 nm, an undoped AlGaN layer **1205** having a thickness of 20 nm, a p-type composition gradient AlGaN layer **1206** having a thickness of 100 nm, and a heavily doped p-type GaN layer **1207** having a thickness of 5 nm formed in this order on the sapphire substrate **1201**. The field-effect transistor of this

embodiment further includes a heavily doped n-type region **1209**, a lightly doped n-type region **1208** containing an n-type impurity at a lower concentration than that of the heavily doped n-type region **1209**, and a source electrode **1212** and a drain electrode **1213** formed of Ti/Al and provided on the heavily doped n-type regions **1209**, respectively. As in the field-effect transistor of each of the first through third embodiments, in the field-effect transistor of this embodiment, an isolation region **1210**, a gate electrode **1214** formed of Pd and a SiN film **1211** are provided. That is, the field-effect transistor of this embodiment is obtained by providing the p-type composition gradient AlGaN layer **1206**, instead of the p-type AlGaN layer **906** in the field-effect transistor of the third embodiment.

[**0077**] **FIG. 13** is an energy band diagram of a vertical section in a gate region of the field-effect transistor of this embodiment. In the field-effect transistor of this embodiment, an Al composition ratio in the p-type composition gradient AlGaN layer **1206** varies such that the Al composition is the highest in part thereof located close to the sapphire substrate and becomes 0 in part thereof located close to the gate electrode. Specifically, in the p-type composition gradient AlGaN layer **1206**, the respective compositions of Al and Ga gradually vary such that the composition of the p-type composition gradient AlGaN layer **1206** is the same as that of the undoped AlGaN layer **1205** at an interface with the undoped AlGaN layer **1205** and the composition thereof is the same as that of the heavily doped p-type GaN layer **1207** at the interface with the heavily doped p-type GaN layer **1207**. In this embodiment, the undoped AlGaN layer **1205** is formed of, for example, $Al_{0.25}Ga_{0.75}N$.

[**0078**] Because of the above-described structure, band discontinuity does not occur at the interface between the p-type composition gradient AlGaN layer **1206** and the undoped AlGaN layer **1205**, so that a gate leakage current due to inter-band tunneling is not generated. As a result, a gate turn-on voltage becomes high, so that a large drain current can be achieved.

[**0079**] The p-type carrier concentration can be made larger in the GaN layer than in the AlGaN layer, so that the carrier concentration in part of the p-type composition gradient AlGaN layer **1206** located close to the gate electrode can be made higher than in part thereof located close to the substrate. As a result, an Ohmic contact with the gate electrode can be formed in a simple manner.

[**0080**] The Al composition ratio in part of the p-type composition gradient AlGaN layer **1206** located in the vicinity of the interface with the undoped AlGaN layer **1205** may be made larger than that in the undoped AlGaN layer **1205**. In such a case, holes are not stored in the vicinity of the interface between the p-type composition gradient AlGaN layer **1206** and the undoped AlGaN, so that a gate leakage current flowing in the undoped AlGaN layer **1205** due to inter-band tunneling can be suppressed.

[**0081**] In this embodiment, an example where the Al composition in the p-type AlGaN layer is gradually changed has been described. However, in the case where as in the first embodiment, a p-type GaN layer is provided on an undoped AlGaN layer, an Al composition in the undoped AlGaN layer may be gradually changed so that band discontinuity at an interface between the p-type GaN layer and the undoped AlGaN layer is eliminated.

Fifth Embodiment

[**0082**] **FIG. 14** is a cross-sectional view of a field-effect transistor according to a fifth embodiment of the present invention.

[**0083**] As shown in **FIG. 14**, in the field-effect transistor of this embodiment, for example, a Si substrate is used as a conductive substrate.

[**0084**] Specifically, the field-effect transistor of this embodiment includes a Si substrate **1401**, and an AlN buffer layer **1402** having a thickness of 100 nm, an undoped GaN layer **1403** having a thickness of 1 μm, an undoped AlGaN layer **1404** having a thickness of 25 nm, and a heavily doped p-type GaN layer **1406** having a thickness of 5 nm formed in this order on an upper surface of the Si substrate **1401**.

[**0085**] The field-effect transistor of this embodiment further includes a gate electrode **1411** formed of Pd which forms an Ohmic contact with the heavily doped p-type GaN layer **1406**, a source electrode **1409** and a drain electrode **1410** each of which is formed of a Ti layer and an Al layer and forms an Ohmic contact with the undoped AlGaN layer **1404**, a back surface electrode **1415** forming an Ohmic contact with a back surface of the Si substrate **1401**, and a SiN film **1408**. In the field-effect transistor of this embodiment, an isolation region **1407** surrounding a device formation region is formed. Furthermore, in the field-effect transistor of this embodiment, a via hole **1412** is formed in a device formation region so as to reach the Si substrate **1407** from the SiN film **1408**, a via hole metal **1413** is formed of Al or the like at a bottom of the via hole **1412** to form an Ohmic contact with the Si substrate **1401**, and an interconnect metal **1414** for connecting the source electrode **1409** and the via hole metal **1413**. As a material for the back surface electrode **1415**, a stacked layer of titanium silicide (TiSi) and titanium nitride (TiN) is used. Note that when as a conductive substrate, silicon carbide (SiC) is used, instead of the Si substrate, a lamination body of Ti/Al can be used as a back surface electrode.

[**0086**] In the field-effect transistor of this embodiment, the source electrode **1409** is electrically connected to the Si substrate **1401** through the interconnect metal **1414** and the via hole metal **1413**. Accordingly, by setting the back surface electrode **1415** to be a ground potential, the source electrode **1409** can be grounded via the via hole metal **1413** and the back surface electrode **1415**. Thus, a source interconnect on a device surface can be eliminated, so that a device area can be reduced. Moreover, when a high drain voltage is applied, an electric line of force extends not only toward the gate electrode but also toward the Si substrate, so that electric field concentration between the gate electrode and the drain electrode can be eased and a breakdown voltage can be increased. Therefore, the device structure of this embodiment is effective for operating as a power transistor.

[**0087**] A field-effect transistor according to the present invention is useful as a power transistor for use in a power supply circuit for a consumer-electronics product such as a TV set.

What is claimed is:

1. A field-effect transistor comprising:

a substrate;

a first nitride semiconductor layer formed above the substrate;

a second nitride semiconductor layer which induces the generation of a two dimensional electron gas at an interface with the first nitride semiconductor layer in an ON state, the second nitride semiconductor layer being formed on the first nitride semiconductor layer and having a larger band gap energy than that of the first nitride semiconductor layer;

a third nitride semiconductor layer of a p-type conductivity formed on the second nitride semiconductor layer;

a gate electrode formed on or above the third nitride semiconductor layer; and

source and drain electrodes formed on or above the second nitride semiconductor layer so as to be located on both sides of the gate electrode, respectively, when viewed from the top.

2. The field-effect transistor of claim 1, wherein the second nitride semiconductor layer is an undoped layer.

3. The field-effect transistor of claim 1, wherein the gate electrode is an Ohmic electrode.

4. The field-effect transistor of claim 1, wherein the field-effect transistor is a normally OFF type.

5. The field-effect transistor of claim 4, wherein the number of holes contained in the third nitride semiconductor layer is larger than the number of electrons of the two dimensional electron gas generated at an interface between the first nitride semiconductor layer and the second nitride semiconductor layer when the third nitride semiconductor layer is not provided.

6. The field-effect transistor of claim 1, further comprising a fourth nitride semiconductor layer formed between the third nitride semiconductor layer and the gate electrode and containing a p-type impurity at a higher concentration than that of the third nitride semiconductor layer,

wherein the gate electrode forms an Ohmic contact with the fourth nitride semiconductor layer.

7. The field-effect transistor of claim 1, wherein part of the second nitride semiconductor layer located immediately below the gate electrode has a larger thickness than that of parts of the second nitride semiconductor layer located immediately below the source and drain electrodes, and

the source and drain electrodes are formed on the second nitride semiconductor layer.

8. The field-effect transistor of claim 1, wherein the first nitride semiconductor layer is formed of GaN,

the second nitride semiconductor layer is formed of $Al_xGa_{1-x}N$ (where $0<x\leqq 1$), and

the third nitride semiconductor layer is formed of $Al_yGa_{1-y}N$ ($0\leqq y\leqq 1$).

9. The field-effect transistor of claim 8, wherein an Al composition ratio x of the second nitride semiconductor layer is equal to or smaller than an Al composition ratio y of the third nitride semiconductor layer.

10. The field-effect transistor of claim 8, wherein an Al composition ratio y of the third nitride semiconductor layer gradually increases in the downward direction, and the Al composition ratio in part of the third nitride semiconductor layer which is in contact with the second nitride semiconductor layer is equal to or larger than an Al composition ratio of the second nitride semiconductor layer.

11. The field-effect transistor of claim 1, wherein first n-type regions with an n-type impurity introduced therein are formed in parts of the first nitride semiconductor layer and the second nitride semiconductor layer located immediately below the source electrode and the drain electrode, respectively, and the first n-type regions are in contact with the source electrode and the drain electrode, respectively.

12. The field-effect transistor of claim 11, wherein a second n-type region containing an n-type impurity at a lower concentration than that of the first n-type regions is formed in parts of the first nitride semiconductor layer and the second nitride semiconductor layer located between one of the first n-type regions formed below the drain electrode and part of the first and second nitride semiconductor layers located immediately below the gate electrode.

13. The field-effect transistor of claim 1, wherein an n-type impurity is introduced into part of the first nitride semiconductor layer forming an interface with the second nitride semiconductor layer.

14. The field-effect transistor of claim 1, wherein a crystal orientation of the second nitride semiconductor layer does not generate a polarization electric field in the perpendicular direction to the substrate.

15. The field-effect transistor of claim 1, further comprising a silicon nitride film for covering at least a side surface of a junction portion of the second nitride semiconductor layer and the third nitride semiconductor layer

16. The field-effect transistor of claim 1, wherein the gate electrode, the source electrode, the drain electrode and the third nitride semiconductor layer are formed in a device formation region when viewed from the top, and

wherein the field-effect transistor further includes a conductive isolation region formed by ion implantation, the conductive isolation region being located in the vicinity of the device formation region when viewed from the top.

17. A method for fabricating a field-effect transistor, the method comprising the steps of:

a) epitaxially growing a first nitride semiconductor layer, a second nitride semiconductor layer and a p-type third nitride semiconductor layer in this order above a substrate;

b) selectively removing part of the third nitride semiconductor layer and part of an upper portion of the second nitride semiconductor layer and generating a two dimensional electron gas in part of an interface between the first and second nitride semiconductor layers located immediately below a region from which each of the parts of the second and third nitride semiconductor layers has been removed;

c) forming a source electrode and a drain electrode so that each of the source electrode and the drain electrode is located on a region of the second nitride semiconductor layer from which the part of the upper portion thereof have been removed in the step b), respectively; and

d) forming a gate electrode on or above the third nitride semiconductor layer.

18. The method of claim 17, wherein the gate electrode formed in the step d) is an Ohmic electrode.

19. The method of claim 17, further comprising, after the step b) and before the step c), the step e) of implanting an n-type impurity into part of the first nitride semiconductor

layer and the second nitride semiconductor layer located immediately below a region from which the part of the third nitride semiconductor layer has been removed in the step b), thereby forming a first n-type region,

wherein each of the source electrode and the drain electrode formed in the step c) is in contact with the first n-type region, respectively.

20. The method of claim 19, further comprising, after the step b) and before the step e), the step f) of implanting an n-type impurity into parts of the first nitride semiconductor layer and the second nitride semiconductor layer located immediately below a region from which the part of the third nitride semiconductor which has been removed in the step b), thereby forming a second n-type region,

wherein the first n-type region formed in the step e) is in contact with the second n-type region and has a higher impurity concentration than that of the second n-type region.

* * * * *