PTO/SB/16 (11-08)
Approved for use through 06/30/2010 OMB 0651-0032
U.S. Patent and Trademark Office: U.S. DEPARTMENT OF COMMERCE
Under the Paperwork Reduction Act of 1995, no persons are required to respond to a collection of information unless it displays a valid OMB control number

Provisional Application for Patent Cover Sheet

This is a request for filing a PROVISIONAL APPLICATION FOR PATENT under 37 CFR 1.53(c)

Inventor(s)

Inventor 1 — Remove

Given Name	Middle Name	Family Name	City	State	Country i
Samuel	Mason	Curry	Oakland	CA	US

Inventor 2 — Remove

Given Name	Middle Name	Family Name	City	State	Country i
Vincent	M.	DiPalma	Hayward	CA	US

Inventor 3 — Remove

Given Name	Middle Name	Family Name	City	State	Country i
Manuel	Luis	Donnay	San Francisco	CA	US

Inventor 4 — Remove

Given Name	Middle Name	Family Name	City	State	Country i
Udo		Hoss	Alameda	CA	US

Inventor 5 — Remove

Given Name	Middle Name	Family Name	City	State	Country i
Daniel	H.	Lee	Burlingame	CA	US

Inventor 6 — Remove

Given Name	Middle Name	Family Name	City	State	Country i
Michael		Love	Pleasanton	CA	US

Inventor 7 — Remove

Given Name	Middle Name	Family Name	City	State	Country i
Tuan		Nguyen	Dublin	CA	US

Inventor 8 — Remove

Given Name	Middle Name	Family Name	City	State	Country i
Louis	G.	Pace	San Carlos	CA	US

DEXCOM
EXHIBIT 1006

PTO/SB/16 (11-08)
Approved for use through 06/30/2010 OMB 0651-0032
U.S. Patent and Trademark Office: U.S. DEPARTMENT OF COMMERCE
Under the Paperwork Reduction Act of 1995, no persons are required to respond to a collection of information unless it displays a valid OMB control number

Inventor 9					Remove
Given Name	Middle Name	Family Name	City	State	Country i
Peter	G.	Robinson	Alamo	CA	US
Inventor 10					Remove
Given Name	Middle Name	Family Name	City	State	Country i
Christopher	Allen	Thomas	San Leandro	CA	US
Inventor 11					Remove
Given Name	Middle Name	Family Name	City	State	Country i
Phillip		Yee	San Francisco	CA	US
Inventor 12					Remove
Given Name	Middle Name	Family Name	City	State	Country i
Michael	Chung-Ta	Chiang	Emeryville	CA	US

All Inventors Must Be Listed – Additional Inventor Information blocks may be generated within this form by selecting the **Add** button. Add

Title of Invention	MEDICAL DEVICE INSERTERS AND PROCESSES OF INSERTING AND USING MEDICAL DEVICES
Attorney Docket Number (if applicable)	031312-06299

Correspondence Address

Direct all correspondence to (select one):

◉ The address corresponding to Customer Number	○ Firm or Individual Name
Customer Number	90259

The invention was made by an agency of the United States Government or under a contract with an agency of the United States Government.

◉ No.

○ Yes, the name of the U.S. Government agency and the Government contract number are:

PTO/SB/16 (11-08)
Approved for use through 06/30/2010 OMB 0651-0032
U.S. Patent and Trademark Office: U.S. DEPARTMENT OF COMMERCE
Under the Paperwork Reduction Act of 1995, no persons are required to respond to a collection of information unless it displays a valid OMB control number

Entity Status

Applicant claims small entity status under 37 CFR 1.27

○ Yes, applicant qualifies for small entity status under 37 CFR 1.27

◉ No

Warning

Petitioner/applicant is cautioned to avoid submitting personal information in documents filed in a patent application that may contribute to identity theft. Personal information such as social security numbers, bank account numbers, or credit card numbers (other than a check or credit card authorization form PTO-2038 submitted for payment purposes) is never required by the USPTO to support a petition or an application. If this type of personal information is included in documents submitted to the USPTO, petitioners/applicants should consider redacting such personal information from the documents before submitting them to USPTO. Petitioner/applicant is advised that the record of a patent application is available to the public after publication of the application (unless a non-publication request in compliance with 37 CFR 1.213(a) is made in the application) or issuance of a patent. Furthermore, the record from an abandoned application may also be available to the public if the application is referenced in a published application or an issued patent (see 37 CFR1.14). Checks and credit card authorization forms PTO-2038 submitted for payment purposes are not retained in the application file and therefore are not publicly available.

Signature

Please see 37 CFR 1.4(d) for the form of the signature.

Signature	/Walter M. Egbert, III/			Date (YYYY-MM-DD)	2010-03-24
First Name	Walter	Last Name	Egbert	Registration Number (If appropriate)	37,31

This collection of information is required by 37 CFR 1.51. The information is required to obtain or retain a benefit by the public which is to file (and by the USPTO to process) an application. Confidentiality is governed by 35 U.S.C. 122 and 37 CFR 1.11 and 1.14. This collection is estimated to take 8 hours to complete, including gathering, preparing, and submitting the completed application form to the USPTO. Time will vary depending upon the individual case. Any comments on the amount of time you require to complete this form and/or suggestions for reducing this burden, should be sent to the Chief Information Officer, U.S. Patent and Trademark Office, U.S. Department of Commerce, P.O. Box 1450, Alexandria, VA 22313-1450. DO NOT SEND FEES OR COMPLETED FORMS TO THIS ADDRESS. **This form can only be used when in conjunction with EFS-Web. If this form is mailed to the USPTO, it may cause delays in handling the provisional application.**

Privacy Act Statement

The Privacy Act of 1974 (P.L. 93-579) requires that you be given certain information in connection with your submission of the attached form related to a patent application or paten. Accordingly, pursuant to the requirements of the Act, please be advised that : (1) the general authority for the collection of this information is 35 U.S.C. 2(b)(2); (2) furnishing of the information solicited is voluntary; and (3) the principal purpose for which the information is used by the U.S. Patent and Trademark Office is to process and/or examine your submission related to a patent application or patent. If you do not furnish the requested information, the U.S. Patent and Trademark Office may not be able to process and/or examine your submission, which may result in termination of proceedings or abandonment of the application or expiration of the patent.

The information provided by you in this form will be subject to the following routine uses:

1. The information on this form will be treated confidentially to the extent allowed under the Freedom of Information Act (5 U.S.C. 552) and the Privacy Act (5 U.S.C 552a). Records from this system of records may be disclosed to the Department of Justice to determine whether disclosure of these records is required by the Freedom of Information Act.
2. A record from this system of records may be disclosed, as a routine use, in the course of presenting evidence to a court, magistrate, or administrative tribunal, including disclosures to opposing counsel in the course of settlement negotiations.
3. A record in this system of records may be disclosed, as a routine use, to a Member of Congress submitting a request involving an individual, to whom the record pertains, when the individual has requested assistance from the Member with respect to the subject matter of the record.
4. A record in this system of records may be disclosed, as a routine use, to a contractor of the Agency having need for the information in order to perform a contract. Recipients of information shall be required to comply with the requirements of the Privacy Act of 1974, as amended, pursuant to 5 U.S.C. 552a(m).
5. A record related to an International Application filed under the Patent Cooperation Treaty in this system of records may be disclosed, as a routine use, to the International Bureau of the World Intellectual Property Organization, pursuant to the Patent Cooperation Treaty.
6. A record in this system of records may be disclosed, as a routine use, t o a n other federal agency for purposes of National Security review (35 U.S.C. 181) and for review pursuant to the Atomic Energy Act (42 U.S.C. 218(c)).
7. A record from this system of records may be disclosed, as a routine use, to the Administrator, General Services, or his/her designee, during an inspection of records conducted by GSA as part of that agency's responsibility to recommend improvements in records management practices and programs, under authority of 44 U.S.C. 2904 and 2906. Such disclosure shall be made in accordance with the GSA regulations governing inspection of records for this purpose, and any other relevant (i.e., GSA or Commerce) directive. Such disclosure shall not be used to make determinations about individuals.
8. A record from this system of records may be disclosed, as a routine use, to the public after either publication of the application pursuant to 35 U.S.C. 122(b) or issuance of a patent pursuant to 35 U.S.C. 151. Further, a record may be disclosed, subject to the limitations of 37 CFR 1.14, as a routine use, to the public if the record was filed in an application which became abandoned or in which the proceedings were terminated and which application is referenced by either a published application, an application open to public inspection or an issued patent.
9. A record from this system of records may be disclosed, as a routine use, to a Federal, State, or local law enforcement agency, if the USPTO becomes aware of a violation or potential violation of law or regulation.

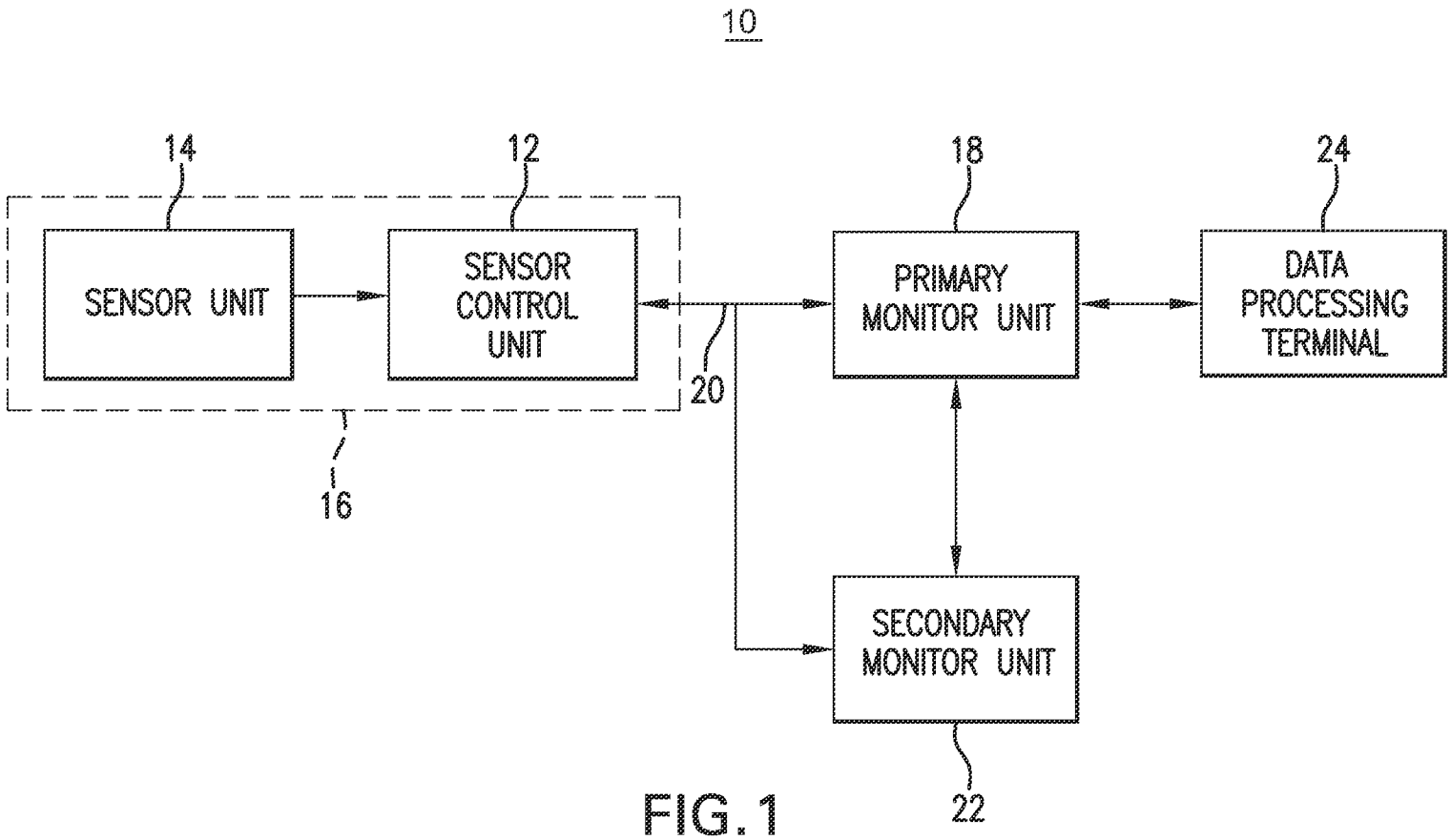
10
14
12
18
24
SENSOR UNIT
SENSOR CONTROL UNIT
PRIMARY MONITOR UNIT
DATA PROCESSING TERMINAL
20
16
SECONDARY MONITOR UNIT
22

FIG. 1

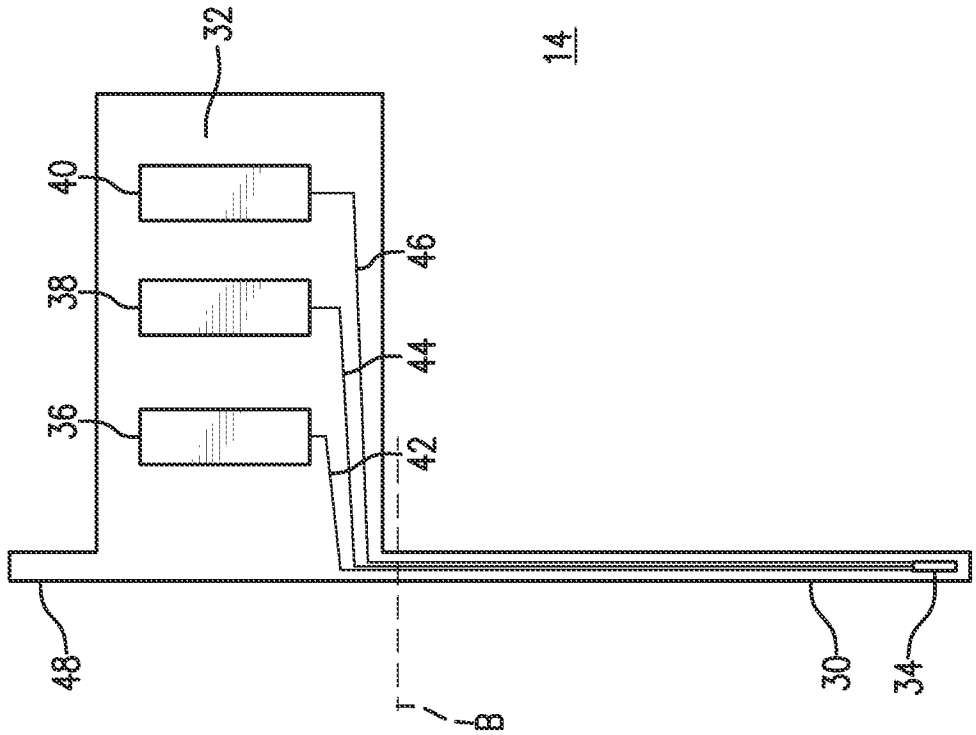

FIG. 2

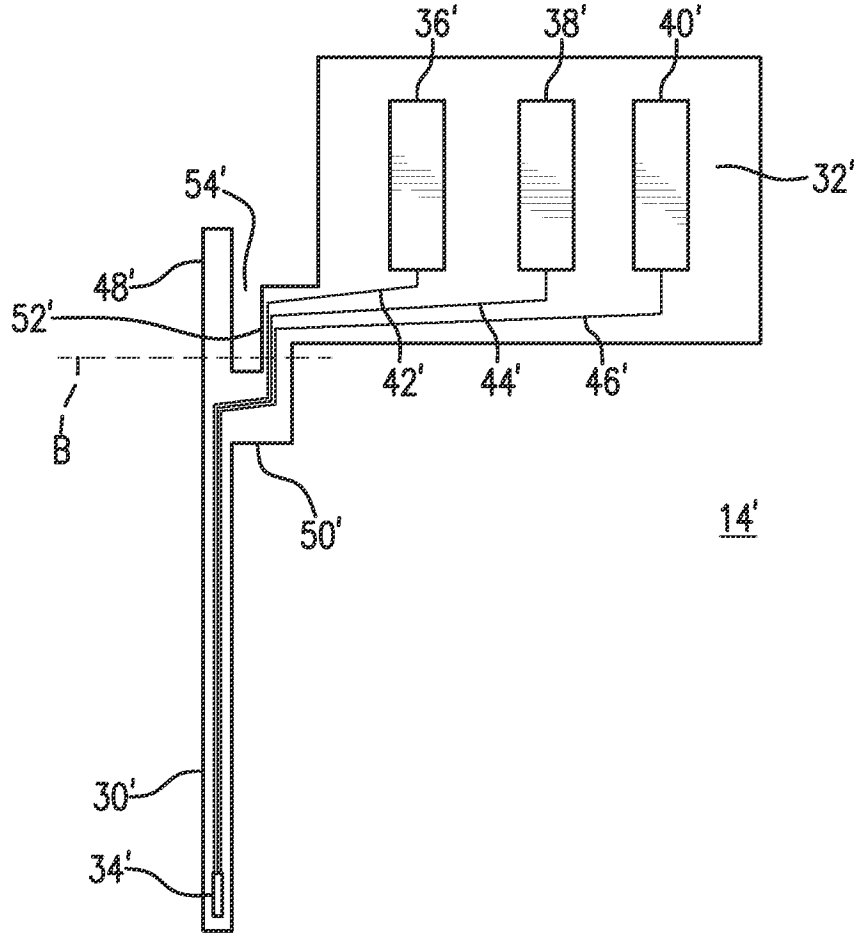

FIG.3

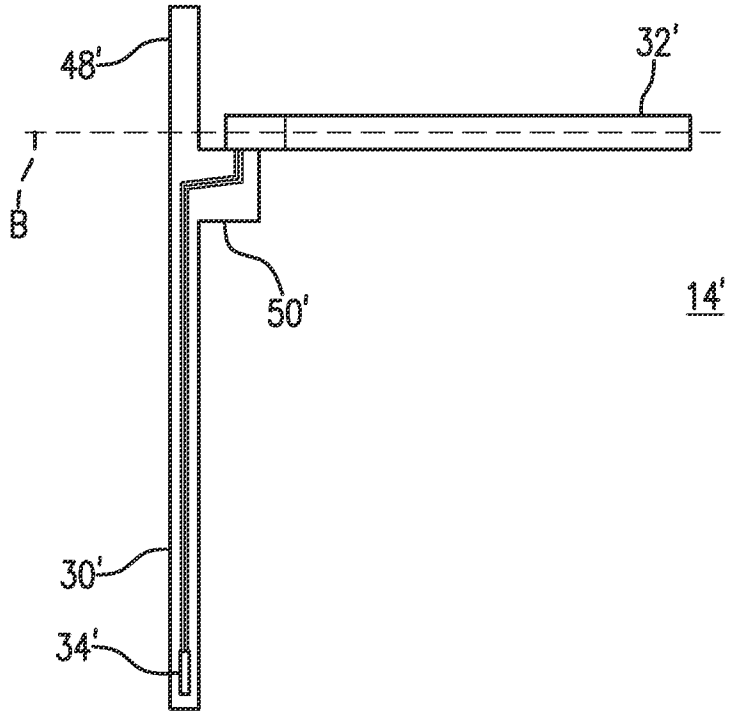

FIG.4

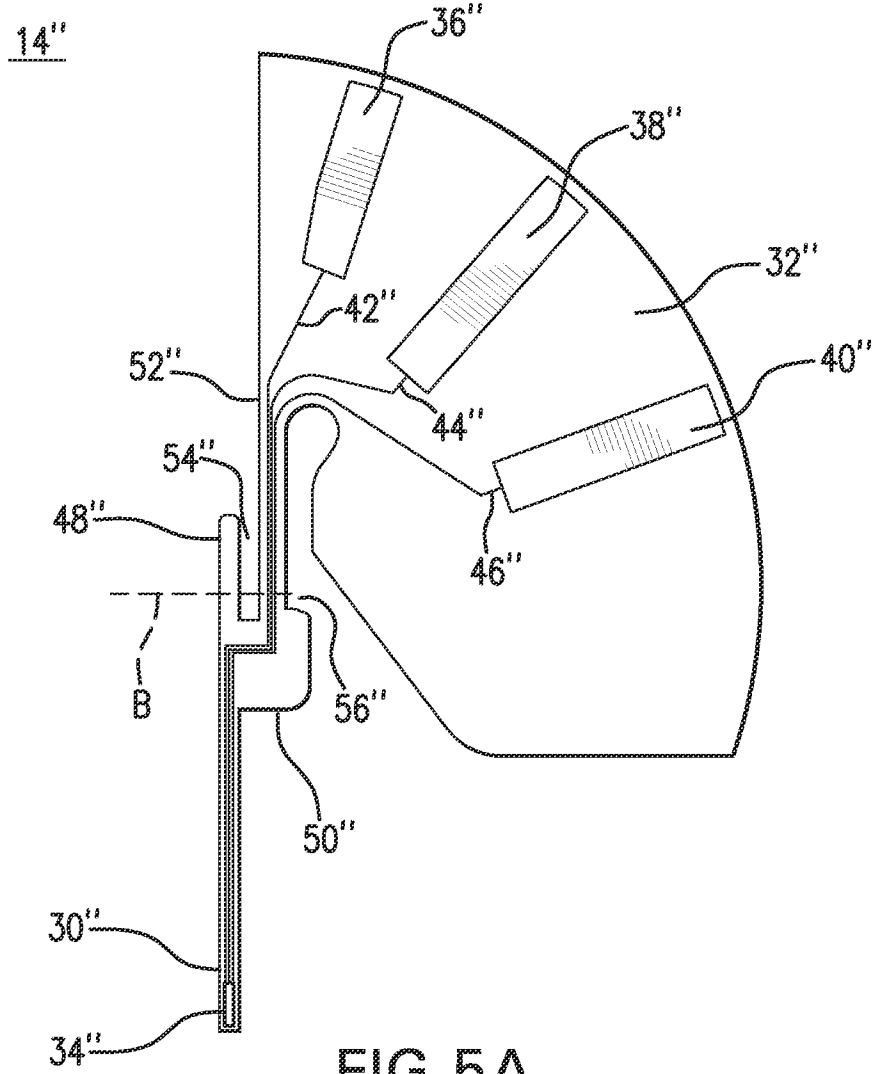

FIG.5A

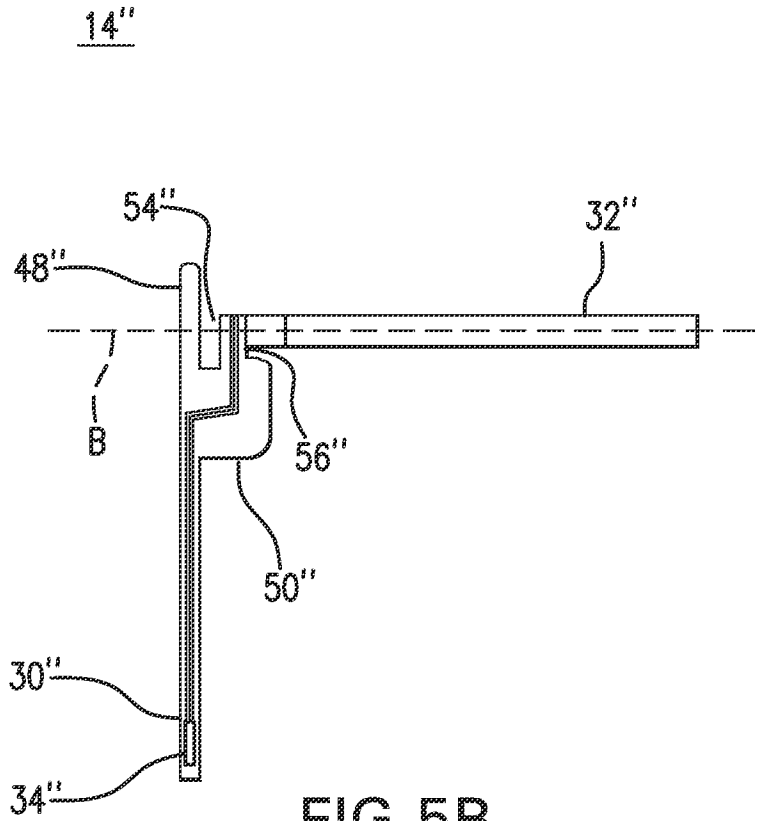

FIG.5B

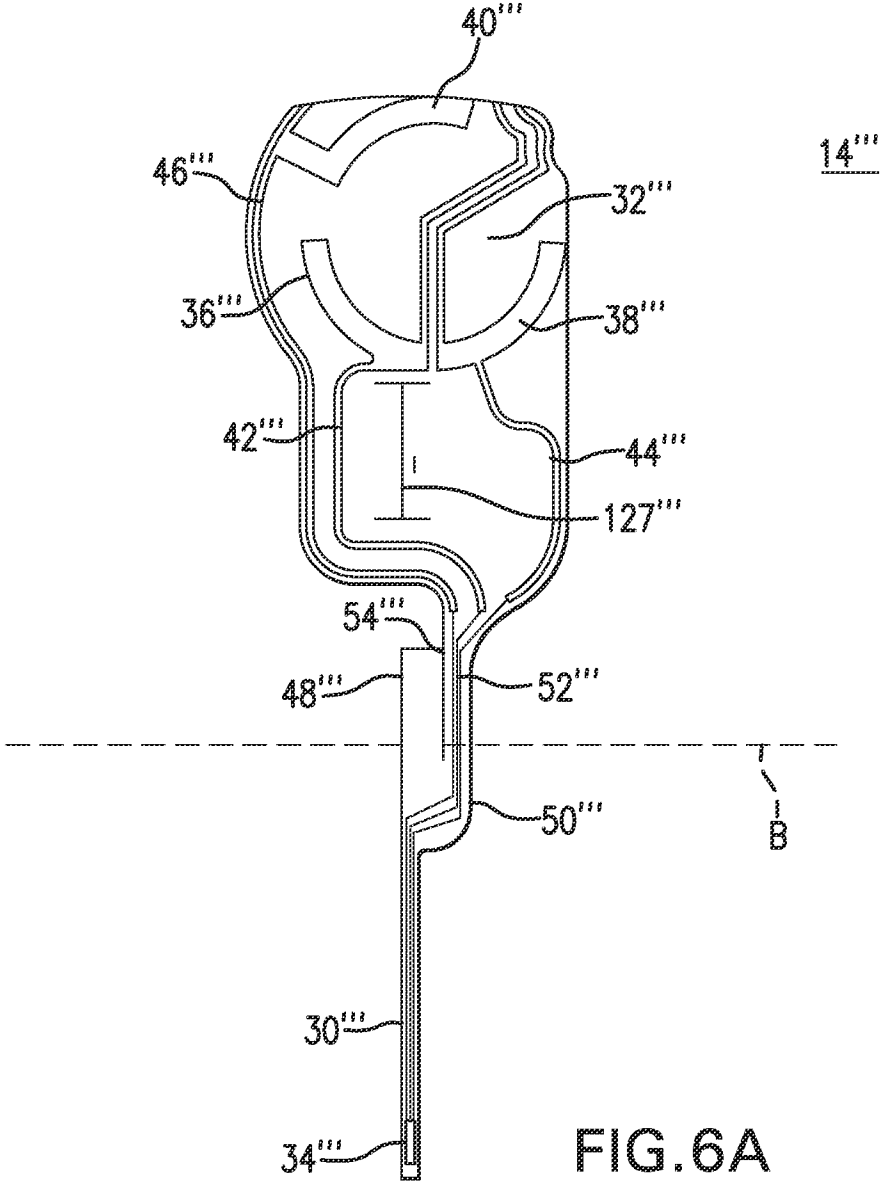

FIG.6A

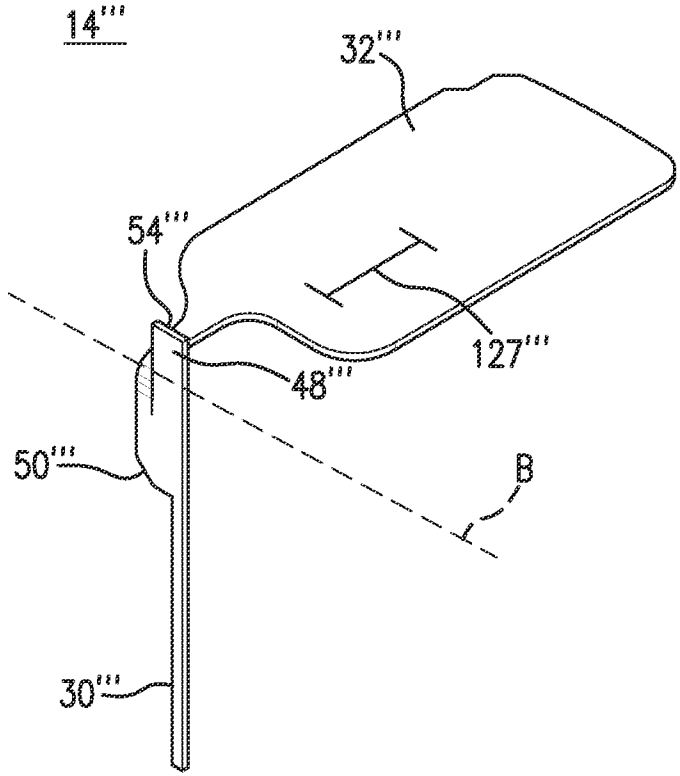

FIG.6B

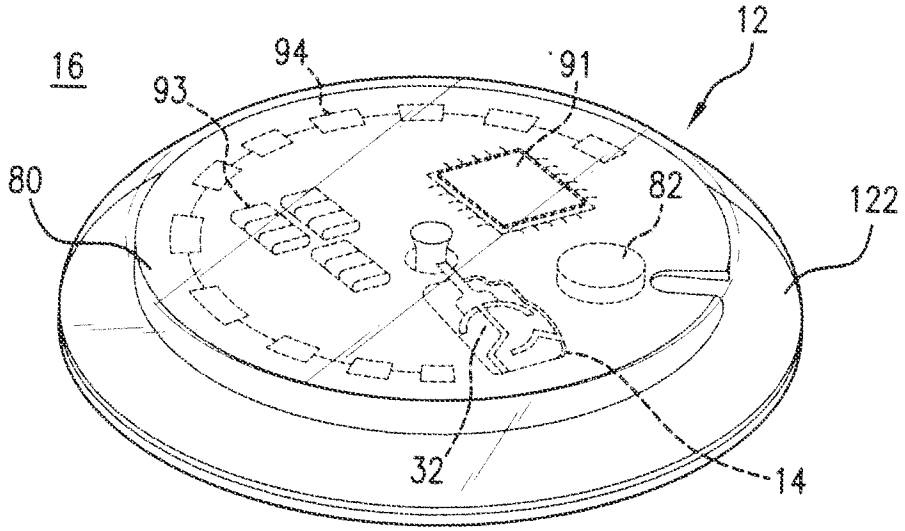

FIG. 7

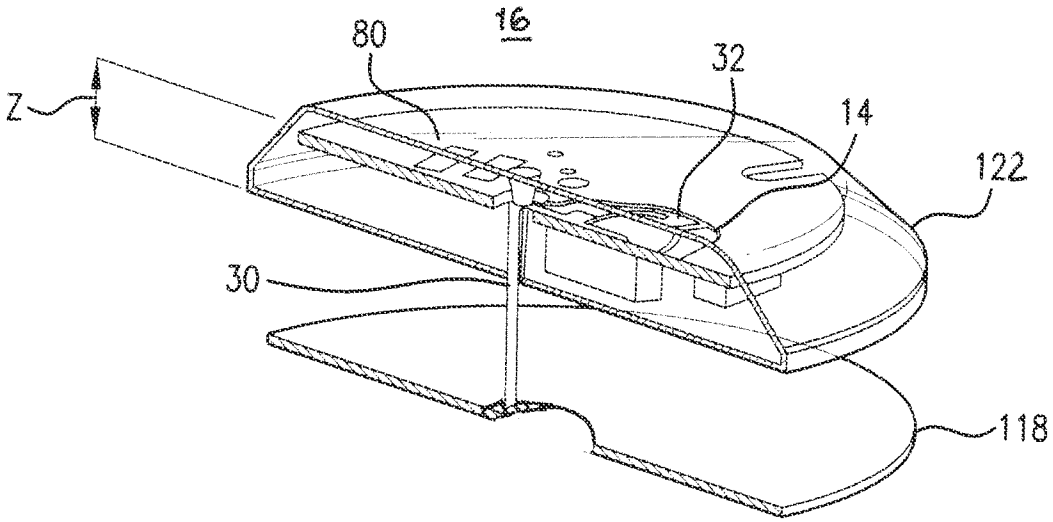

FIG. 8

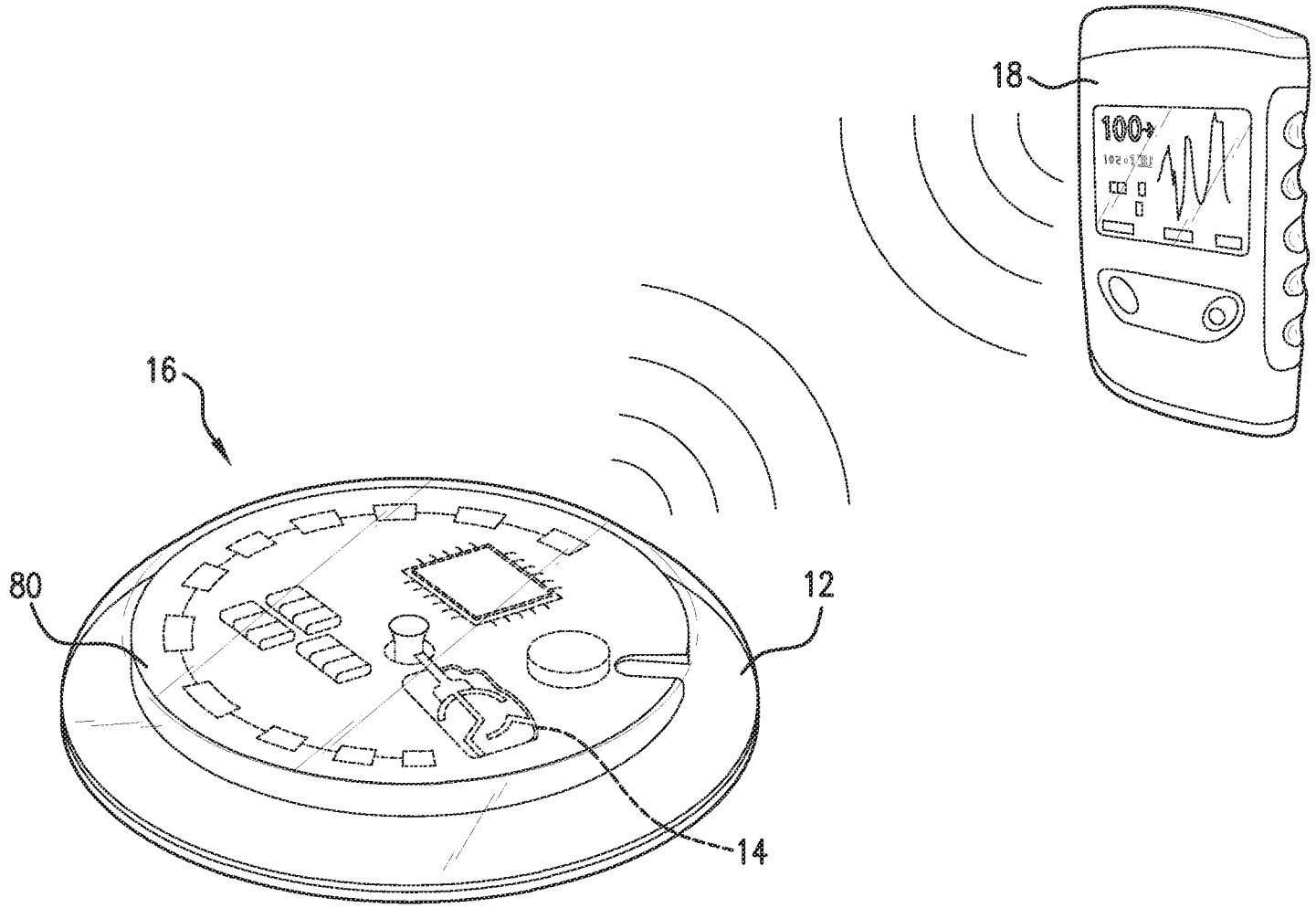

FIG.9

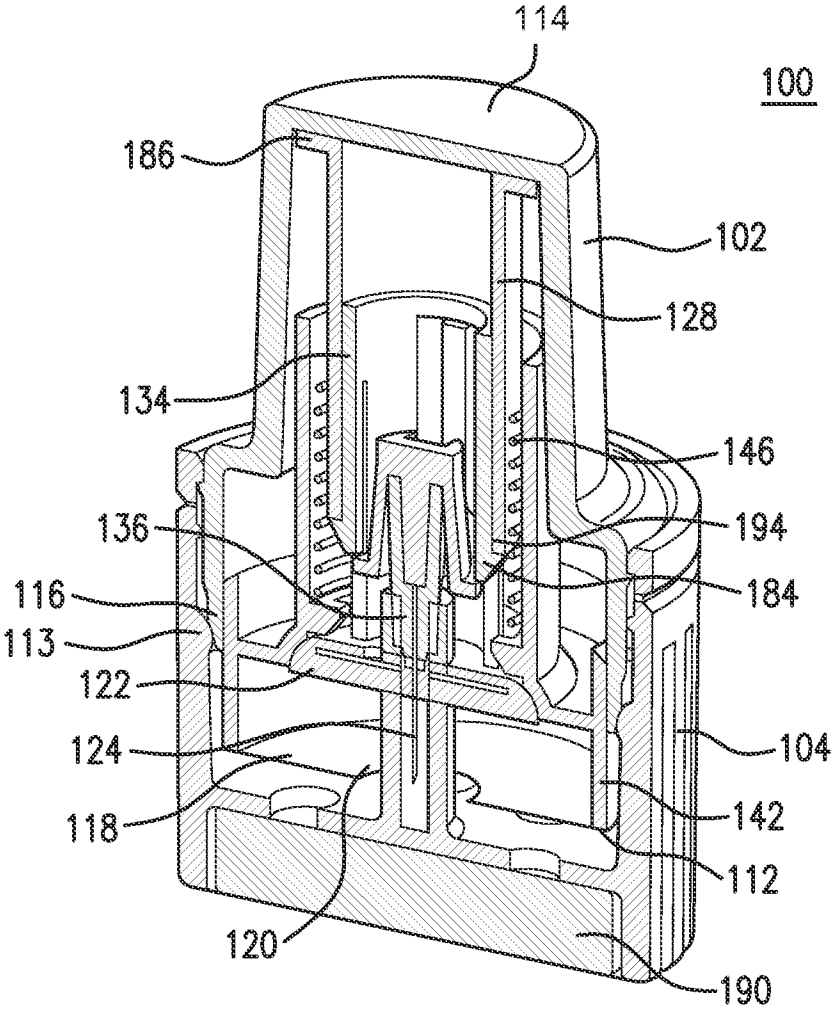
114
100
186
102
128
134
146
136
194
116
184
113
122
124
104
118
142
112
120
190

FIG. 10

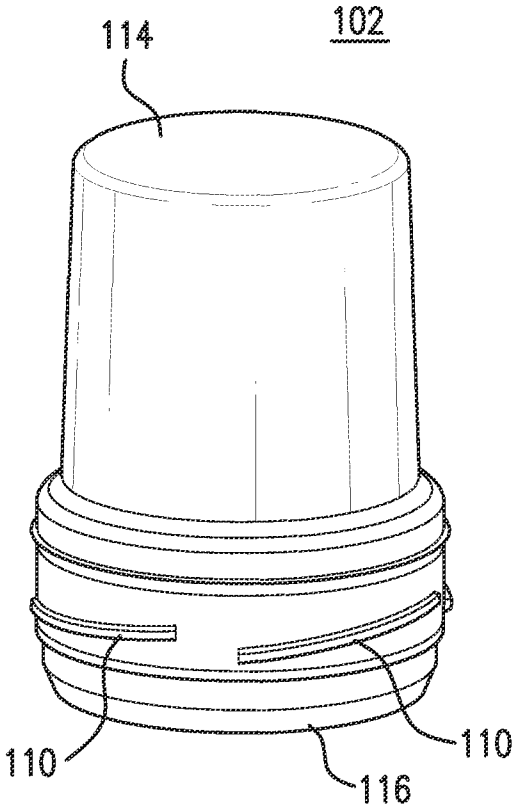

FIG. 11

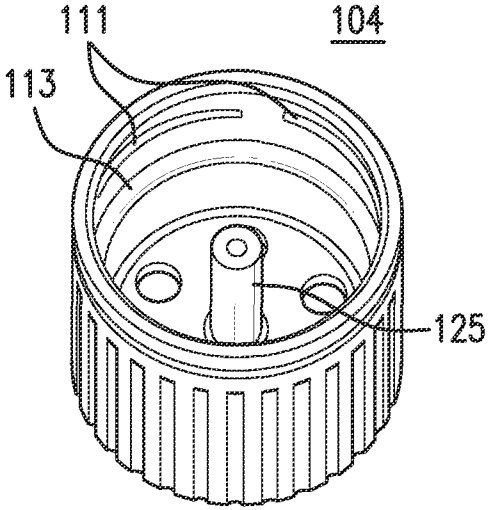

FIG. 12

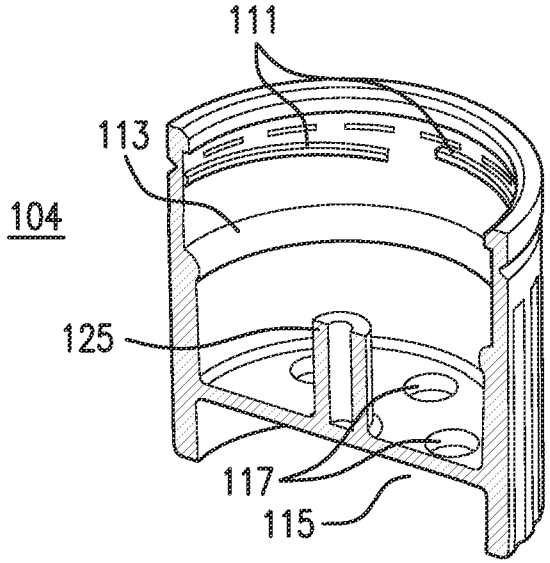

FIG. 13

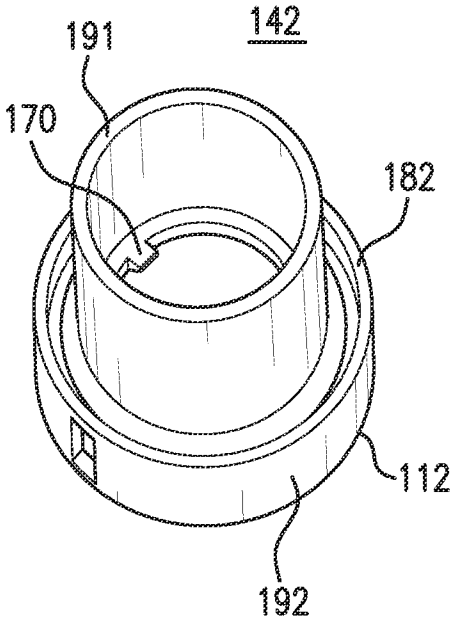

FIG. 14

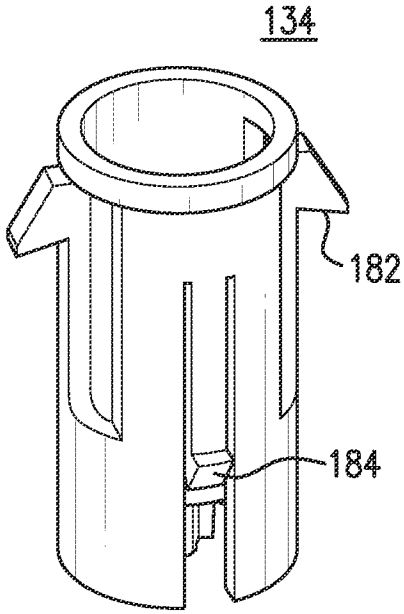

FIG. 15

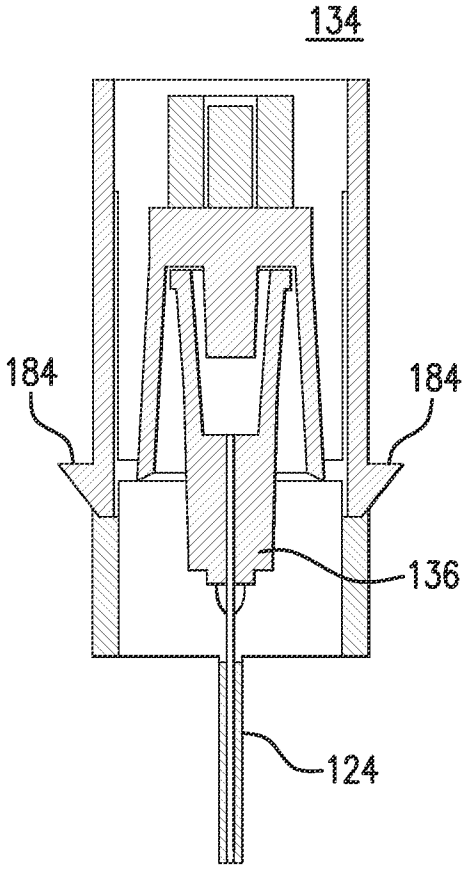

FIG. 16

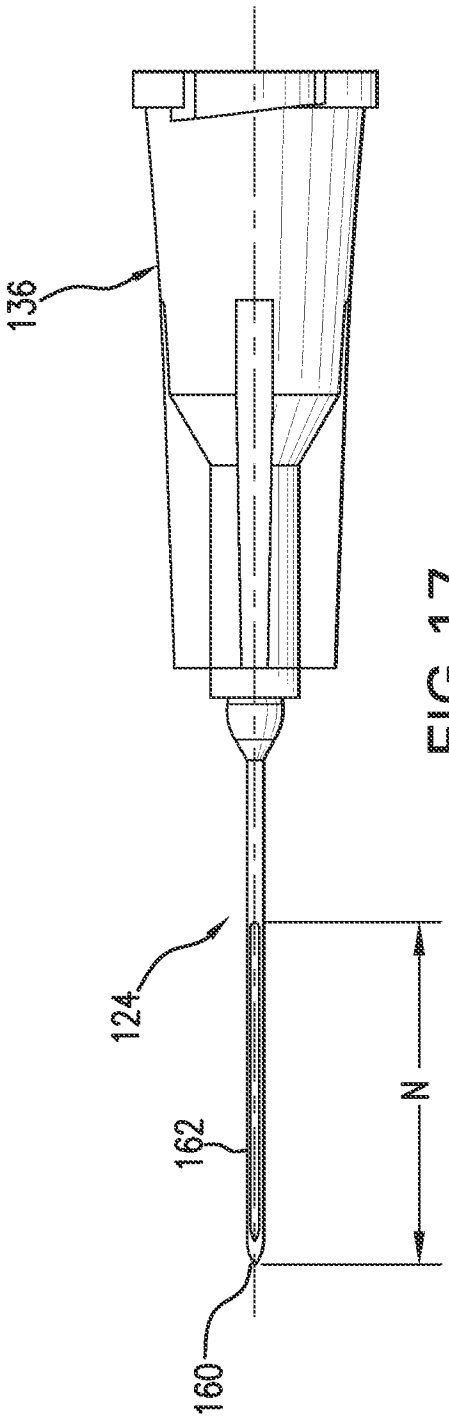

FIG. 17

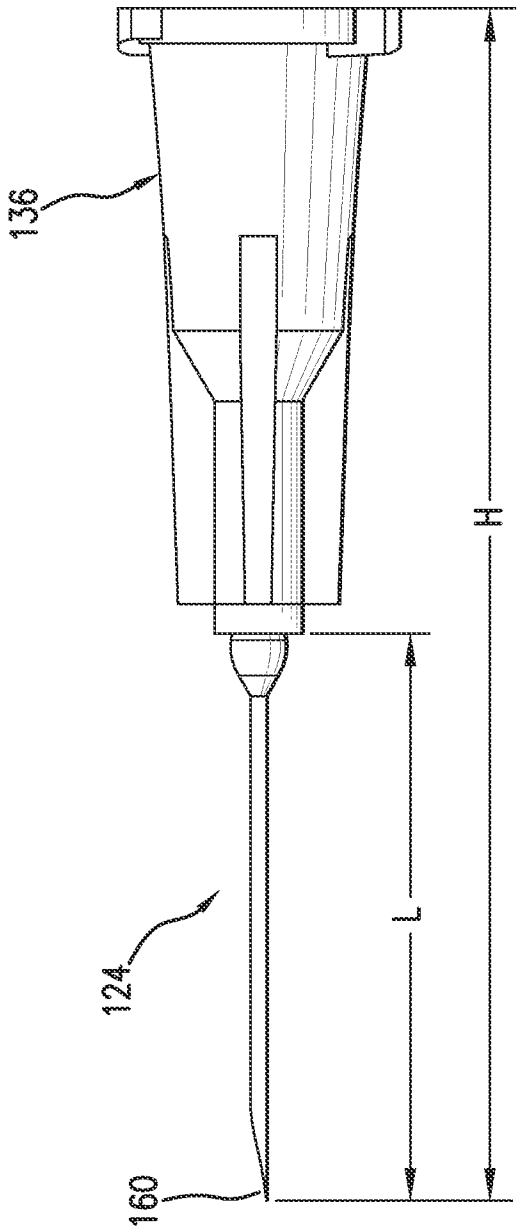

FIG. 18

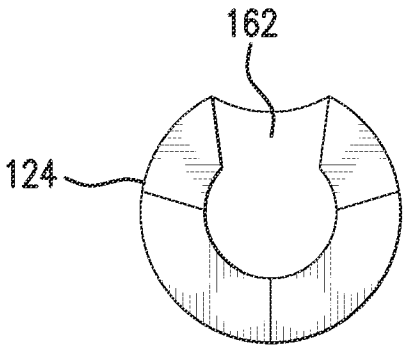

FIG. 19

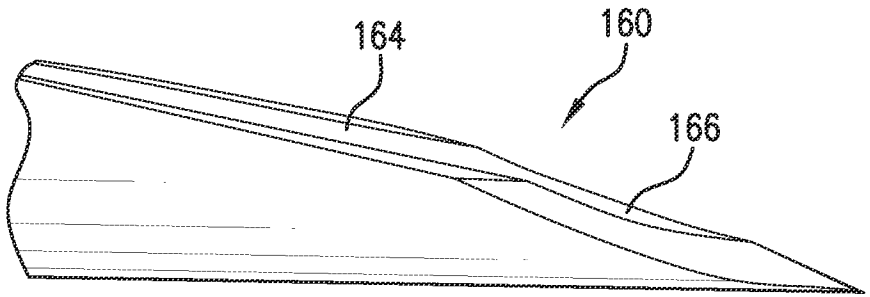

FIG. 20

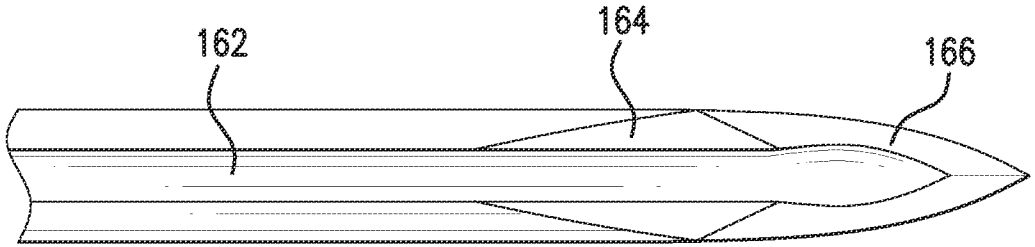

FIG. 21

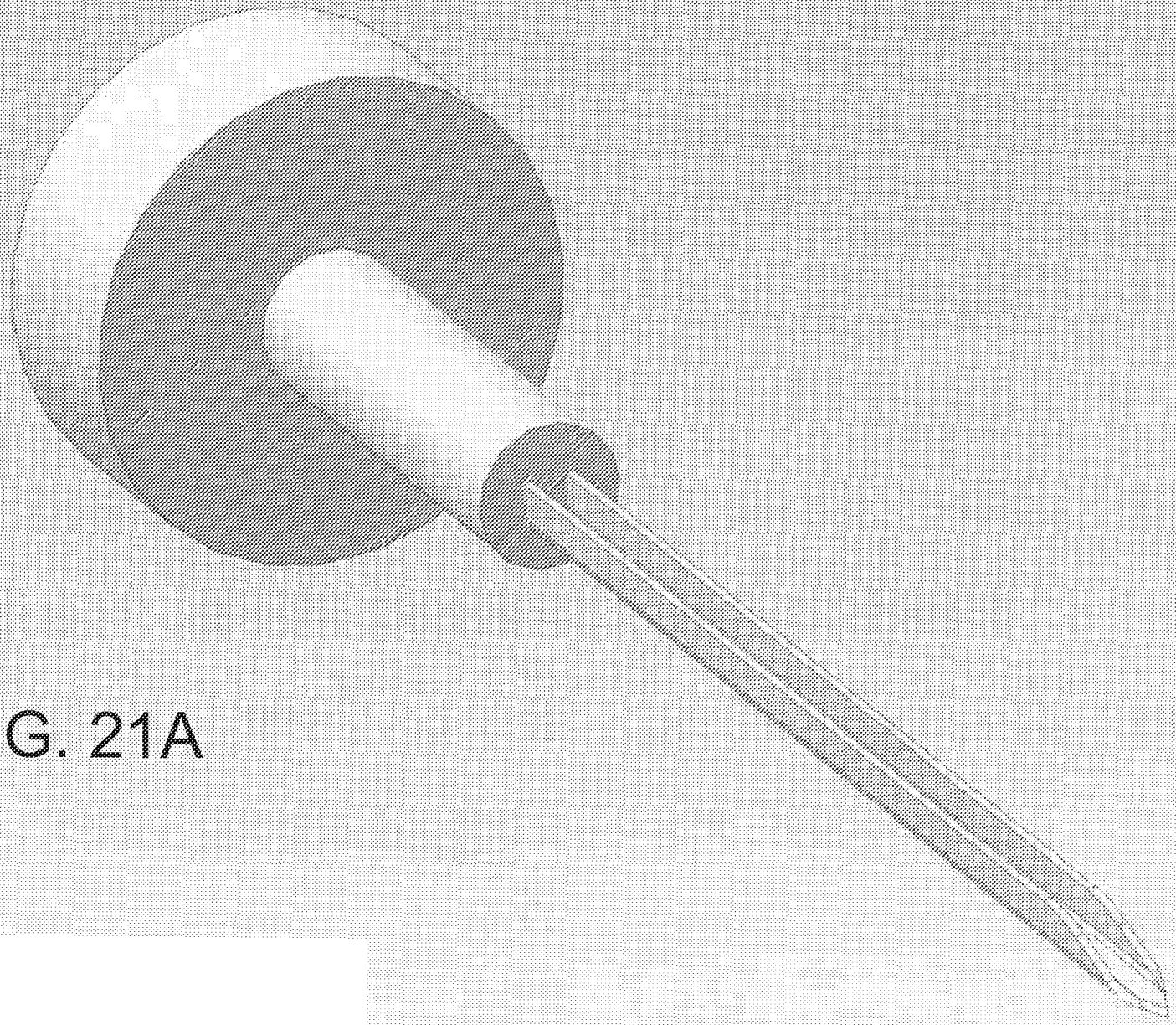

FIG. 21A

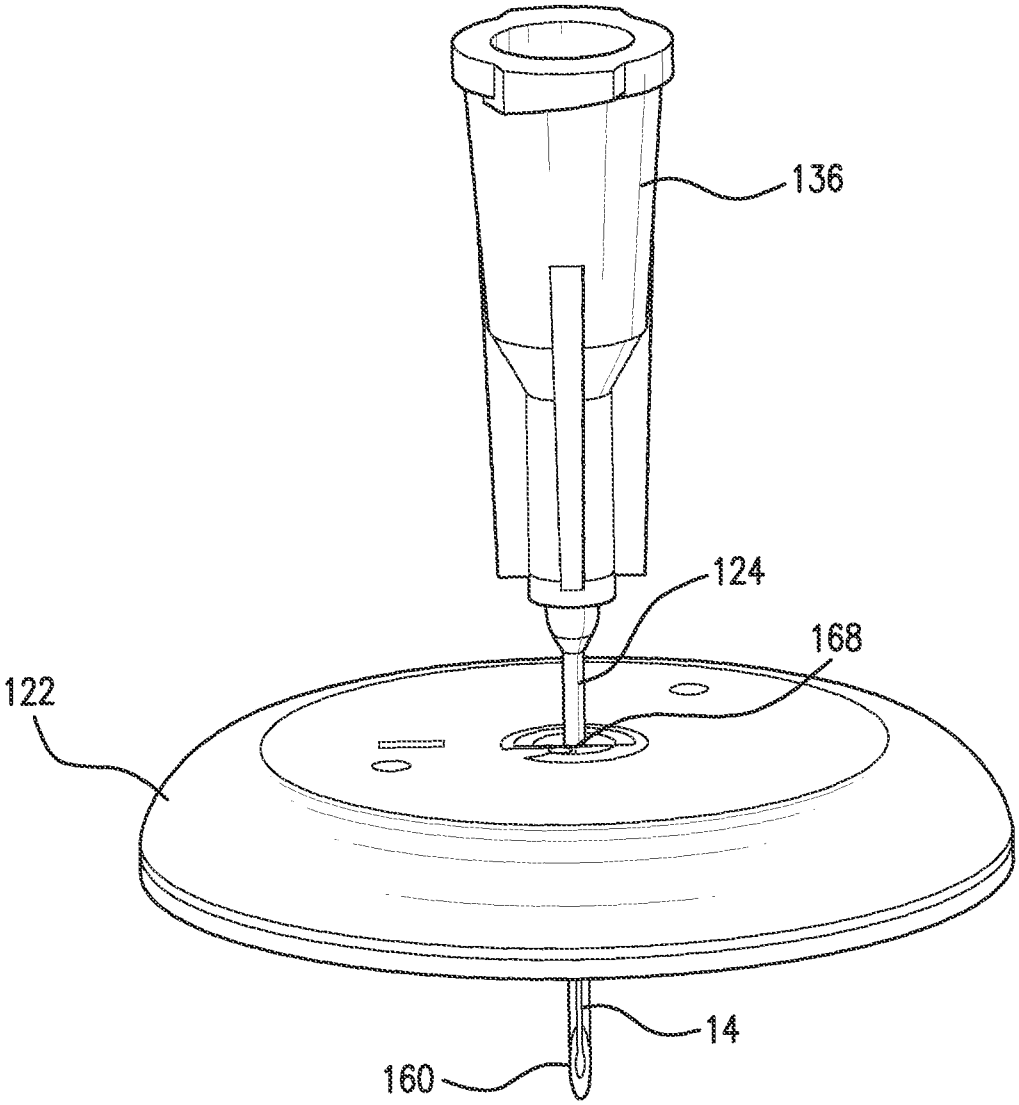

FIG.22

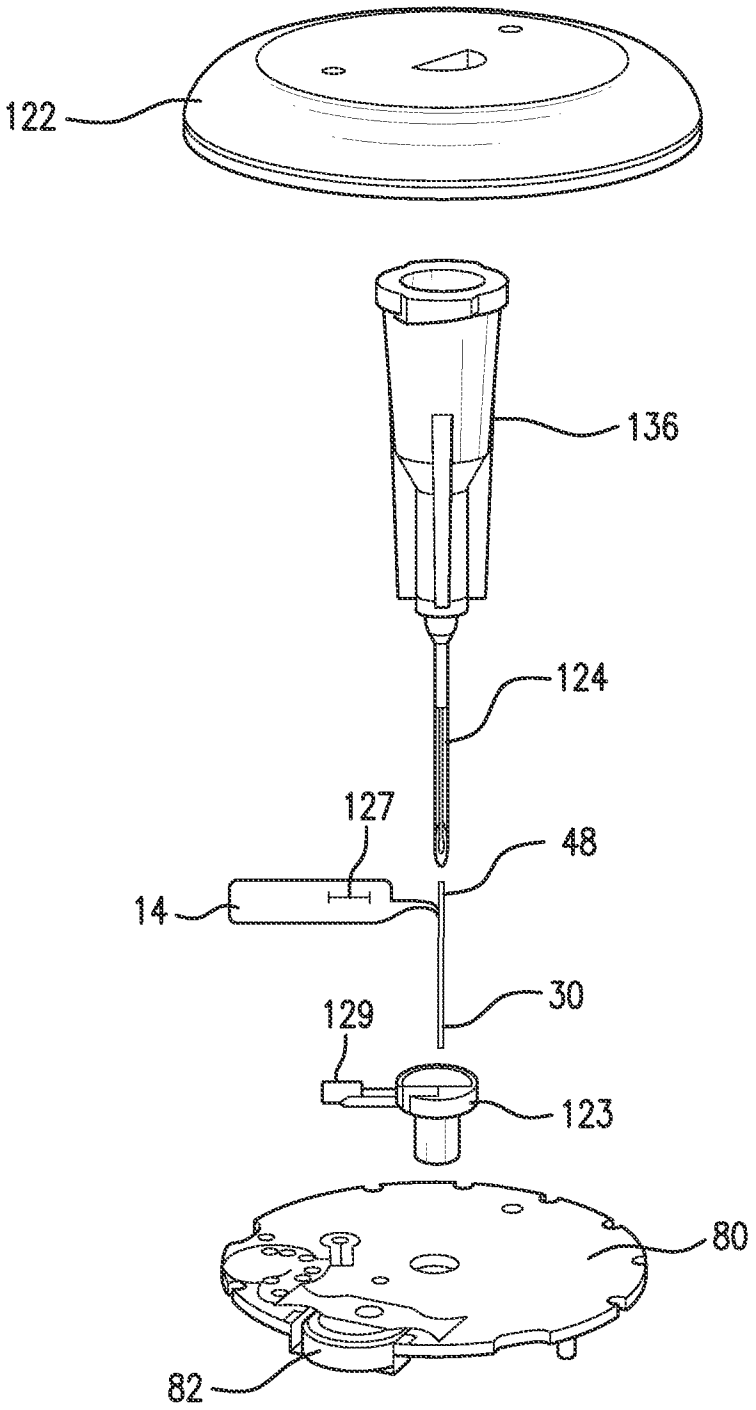

FIG.23

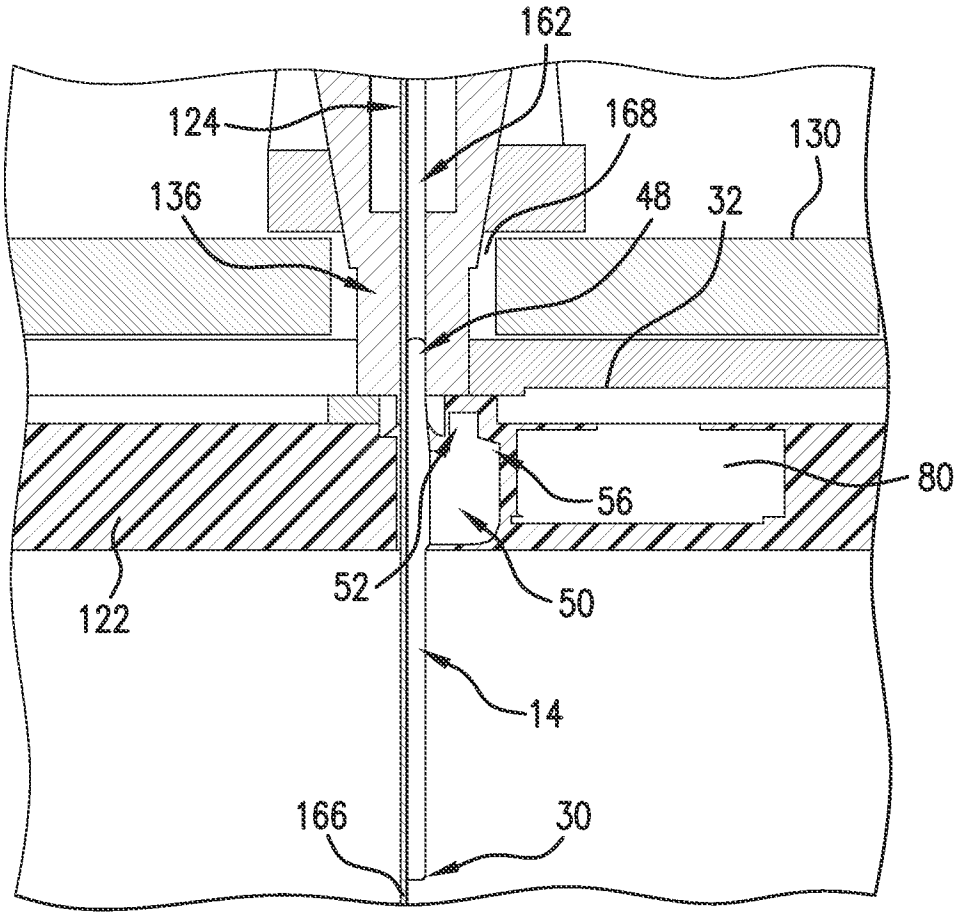

FIG.24

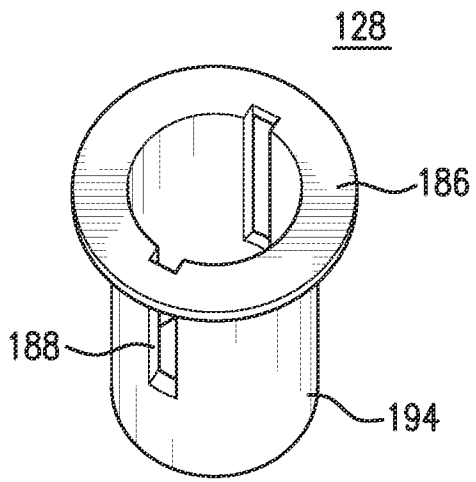

FIG.25

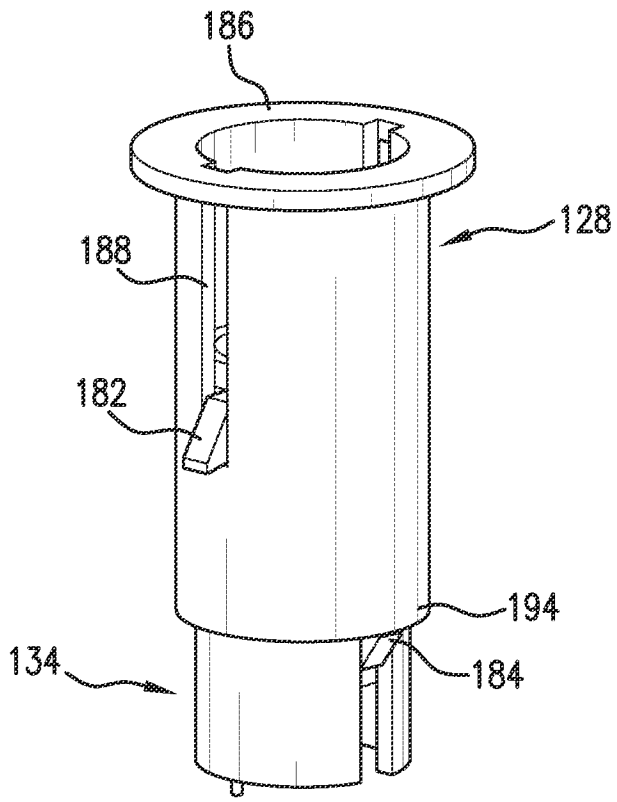

FIG.26

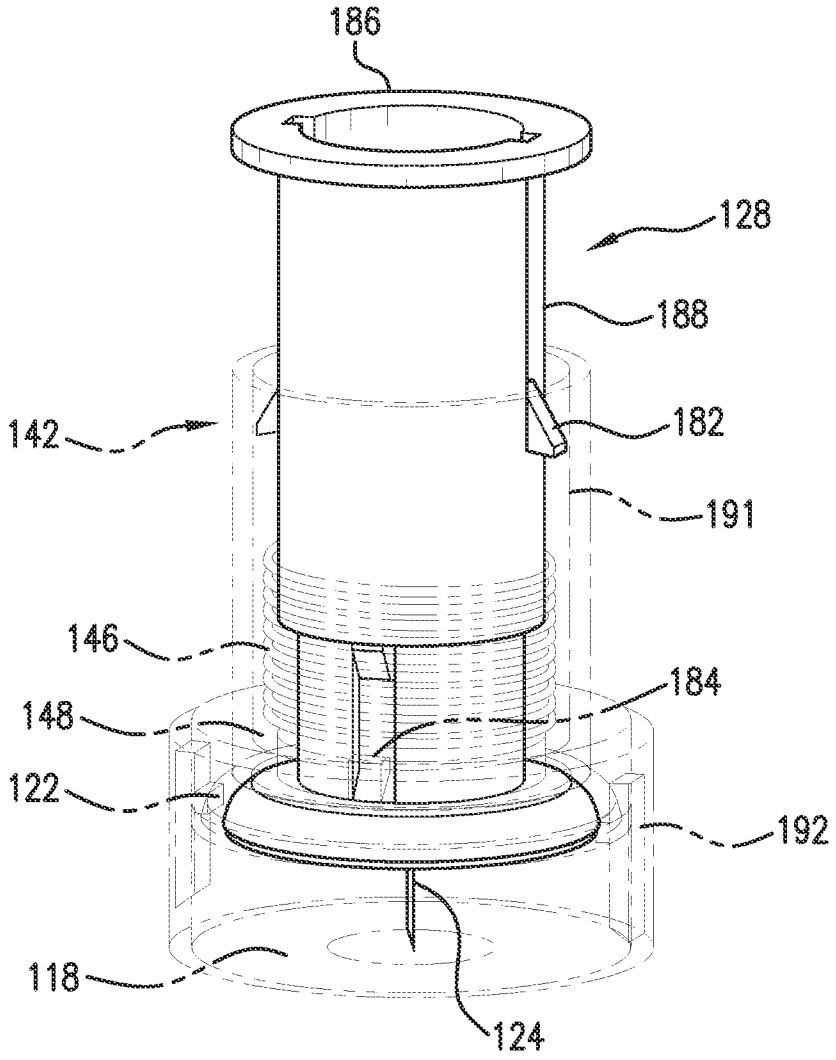

FIG.27

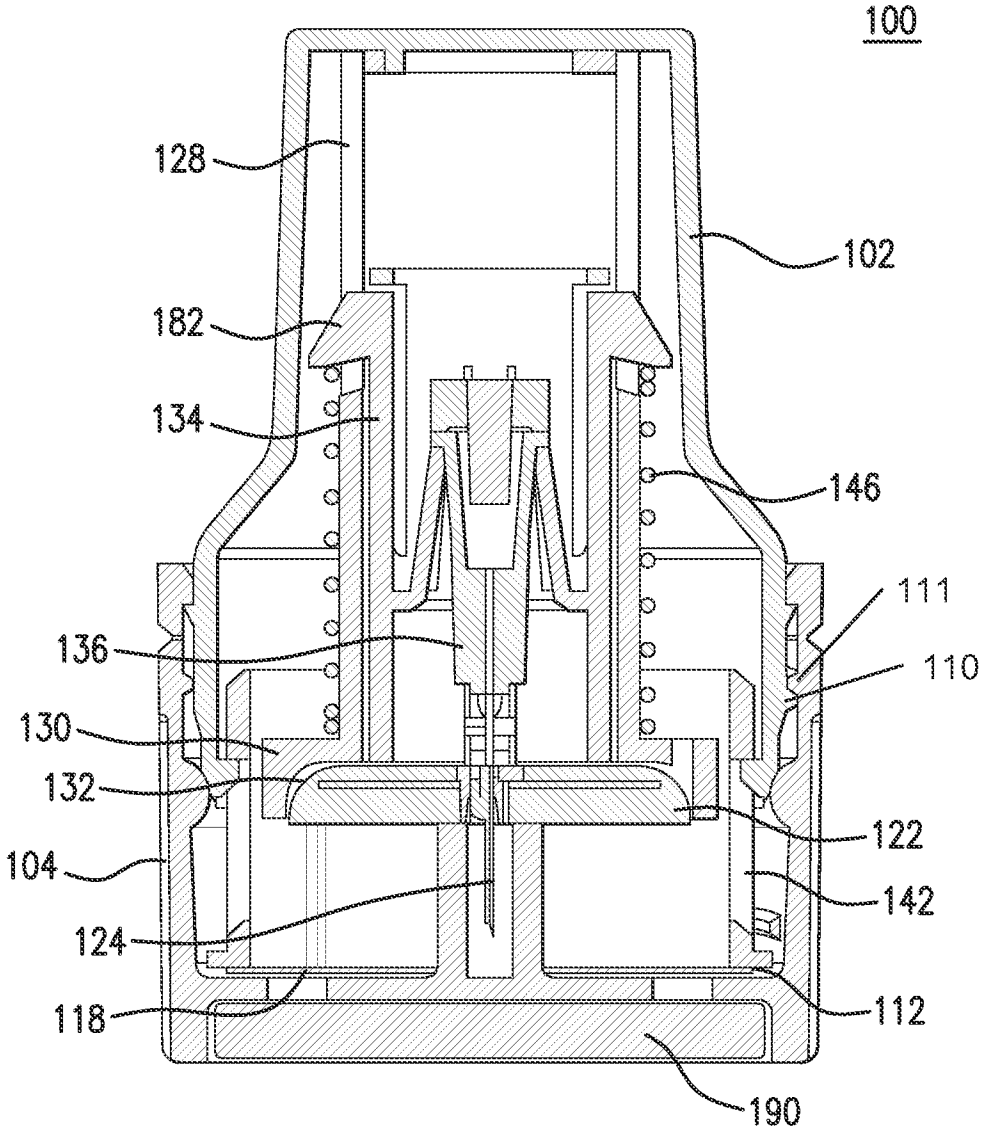
100
128
102
182
134
146
111
136
110
130
132
122
104
142
124
118
112
190

FIG.28

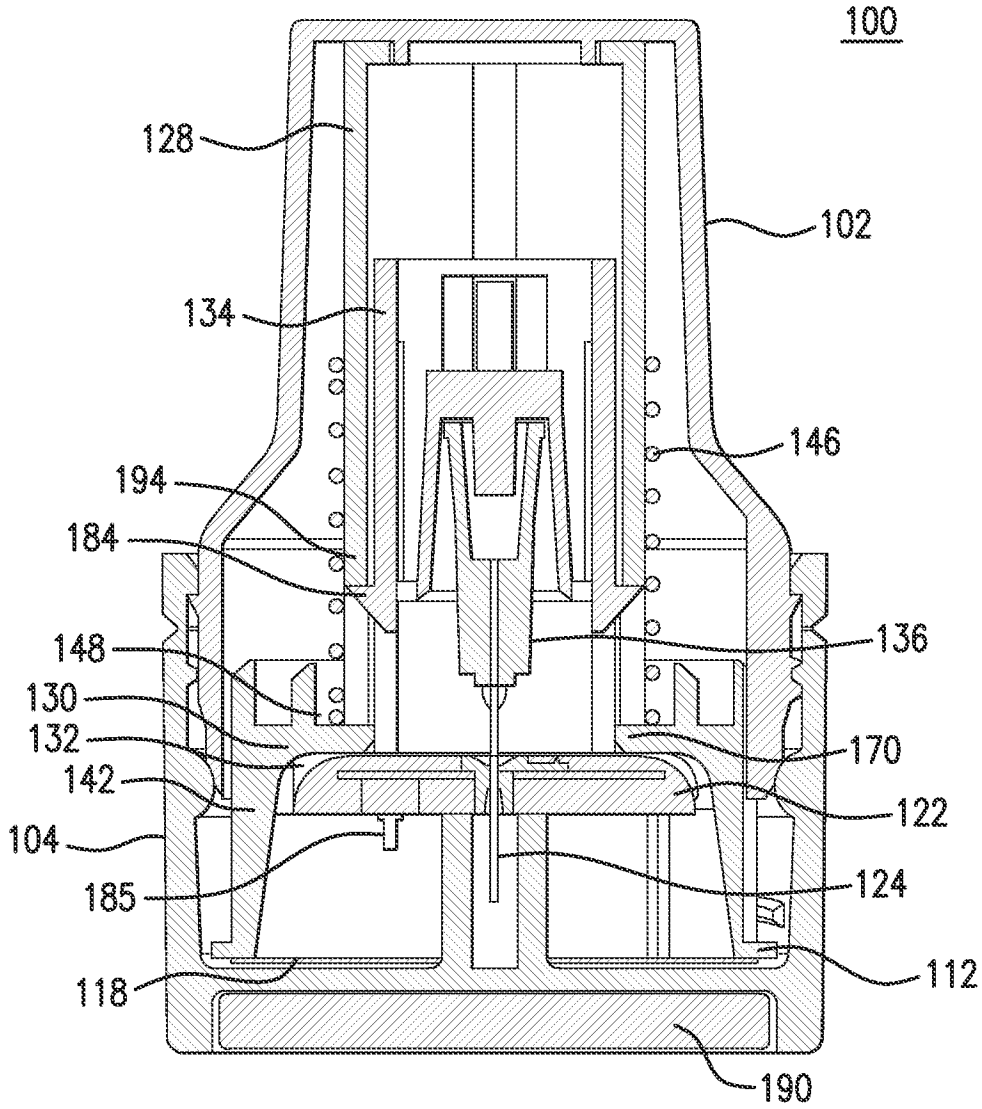
100
128
102
134
146
194
184
136
148
130
132
170
142
122
104
124
185
112
118
190

FIG.29

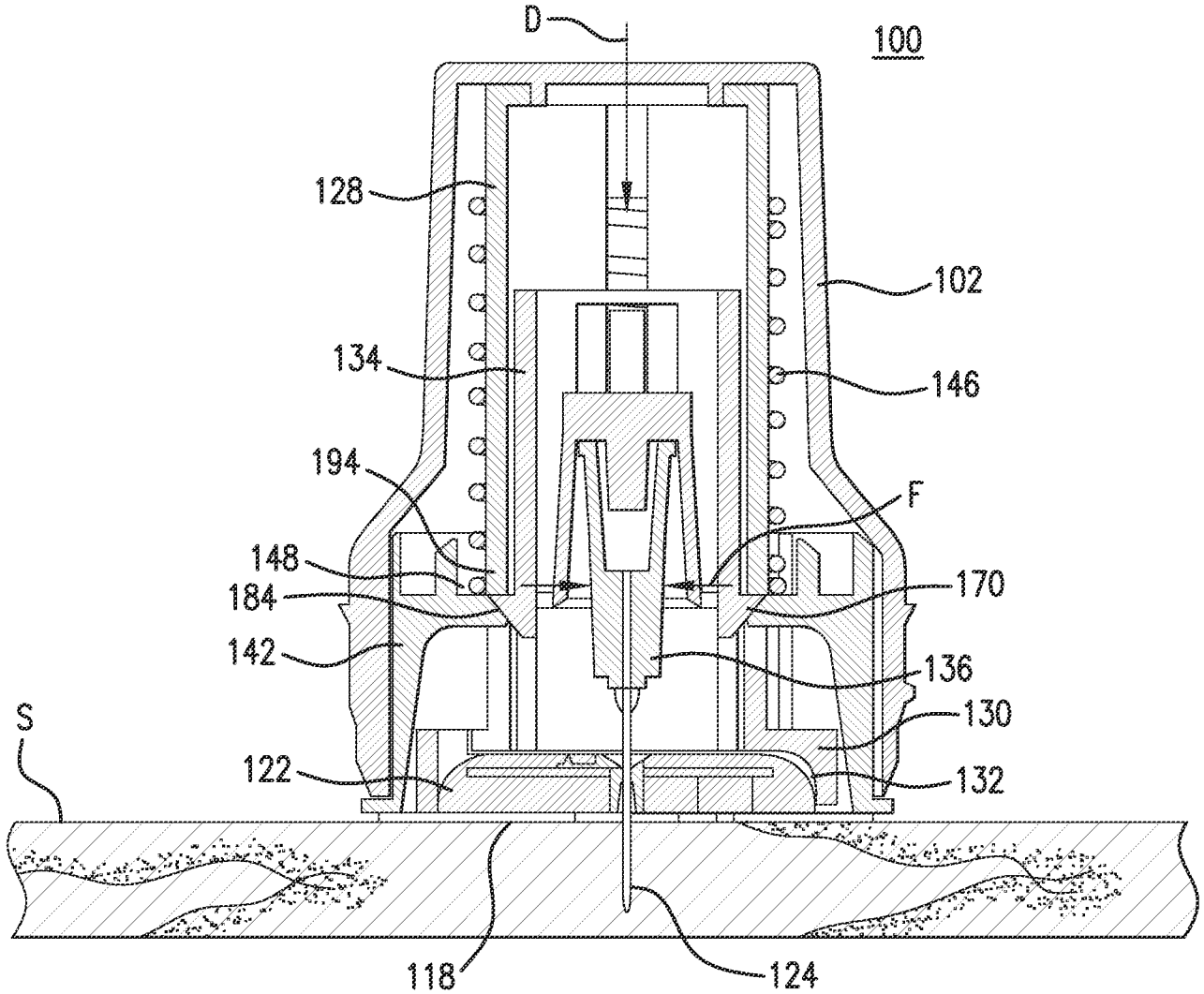
D
100
128
102
134
146
194
F
148
170
184
142
136
130
S
122
132
118
124

FIG.30

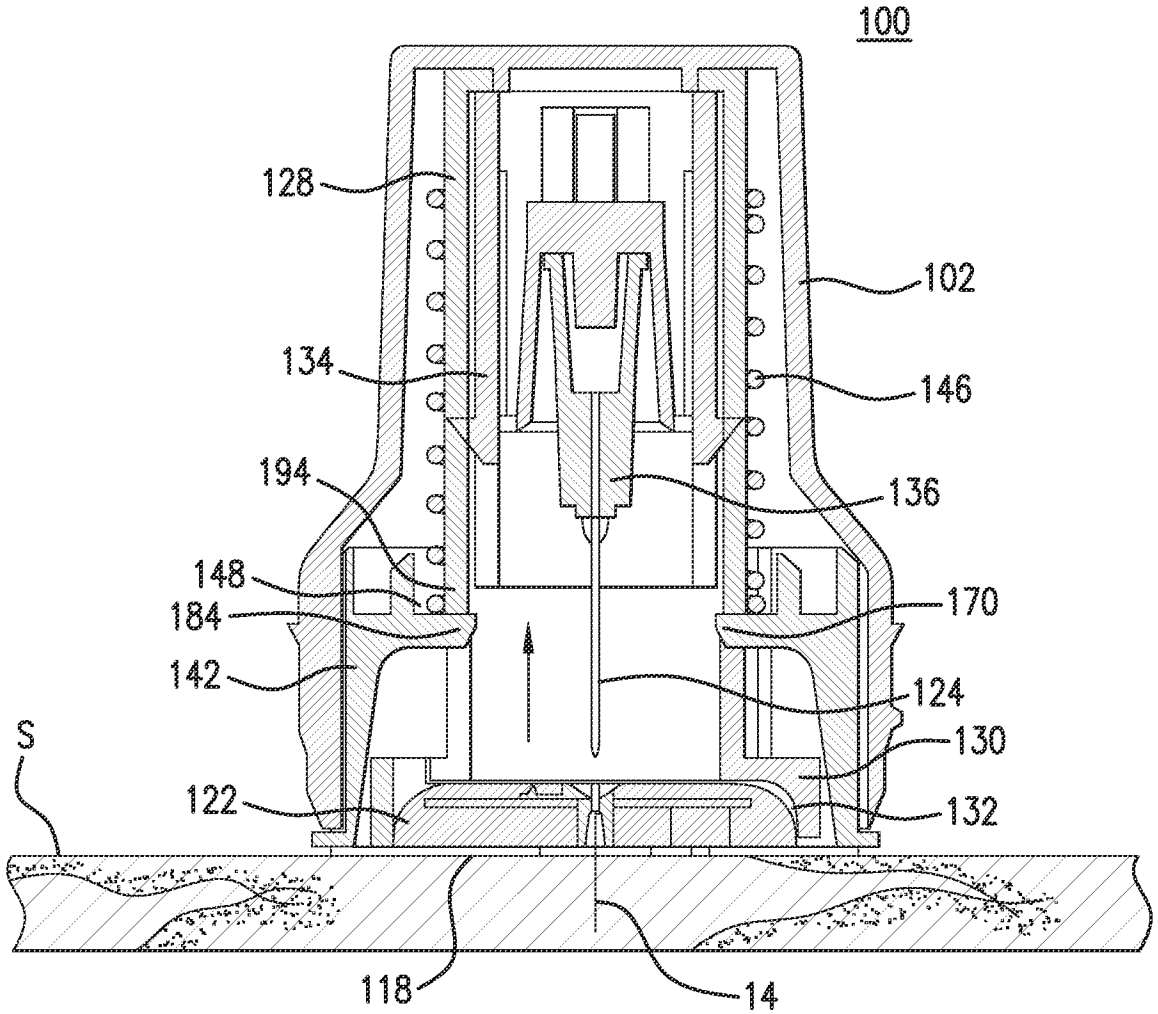
100
128
102
134
146
194
136
148
170
184
142
124
S
130
122
132
118
14

FIG.31

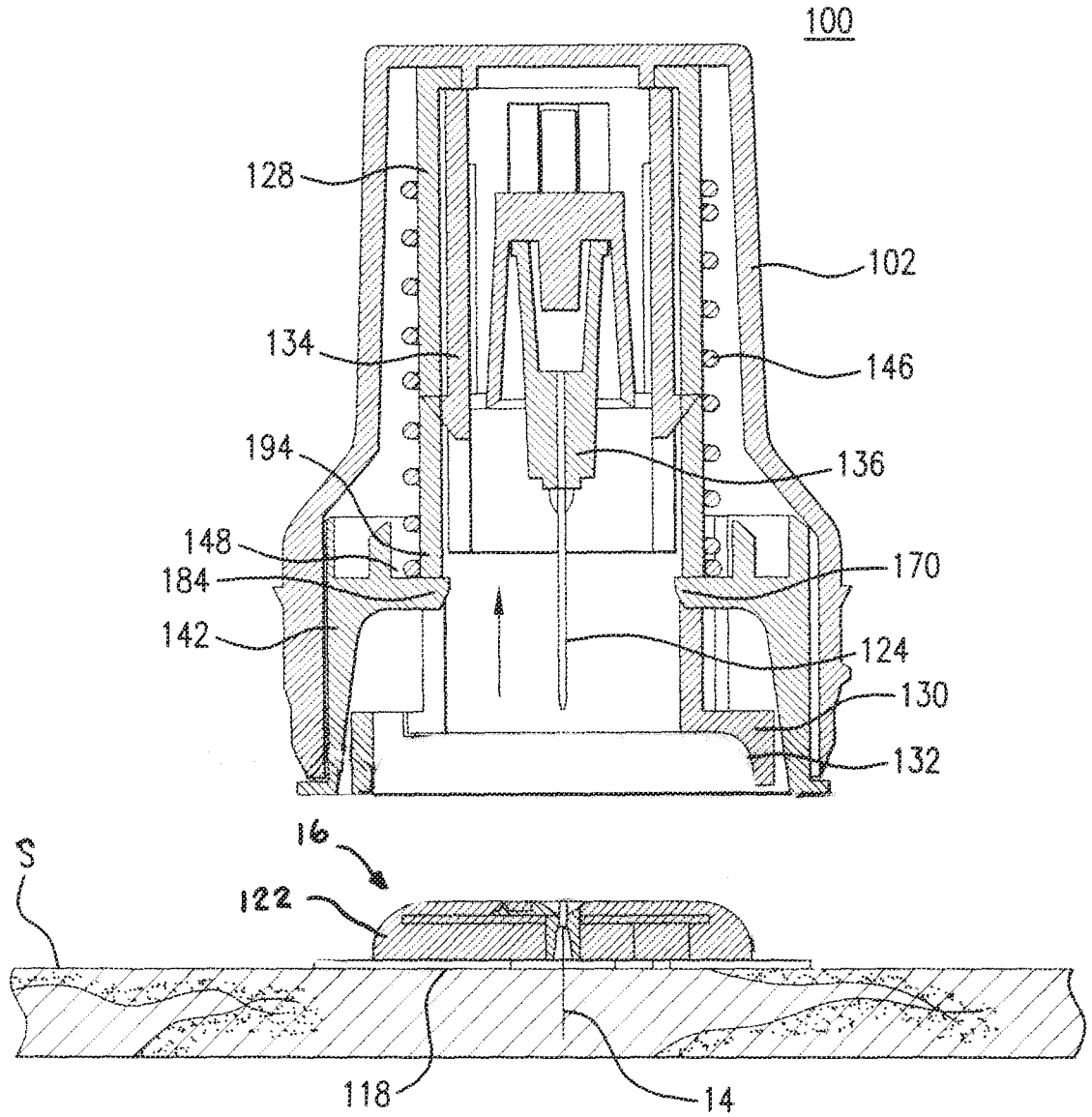
100
128
102
134
146
194
136
148
170
184
142
124
130
132
16
S
122
118
14

FIG.31A

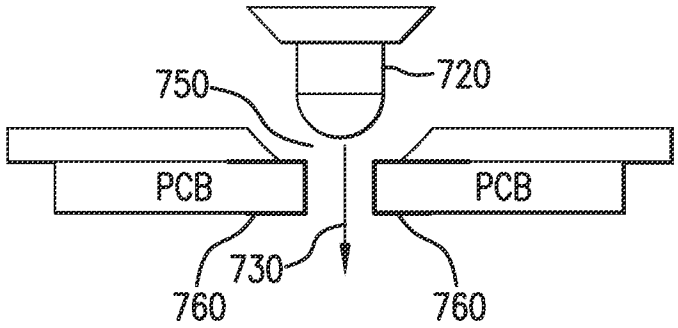

FIG.32

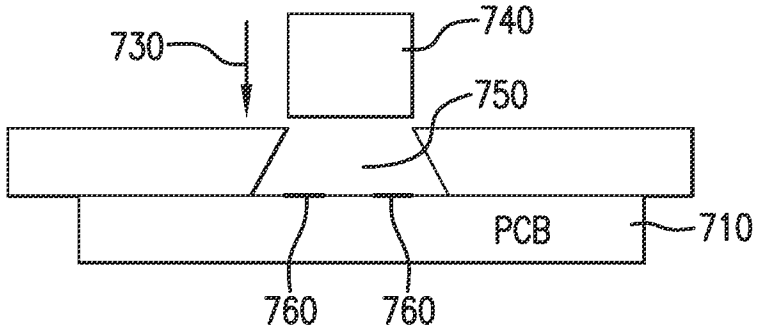

FIG.33

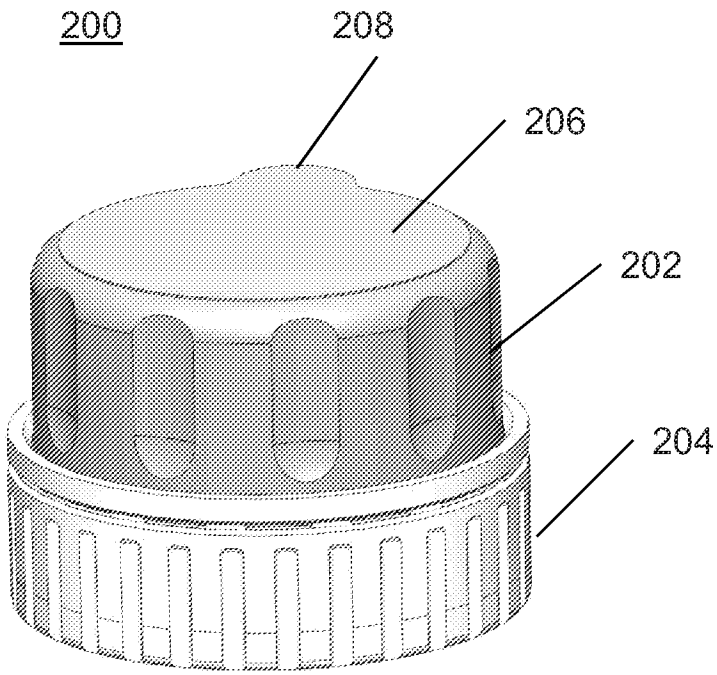

FIGURE 34

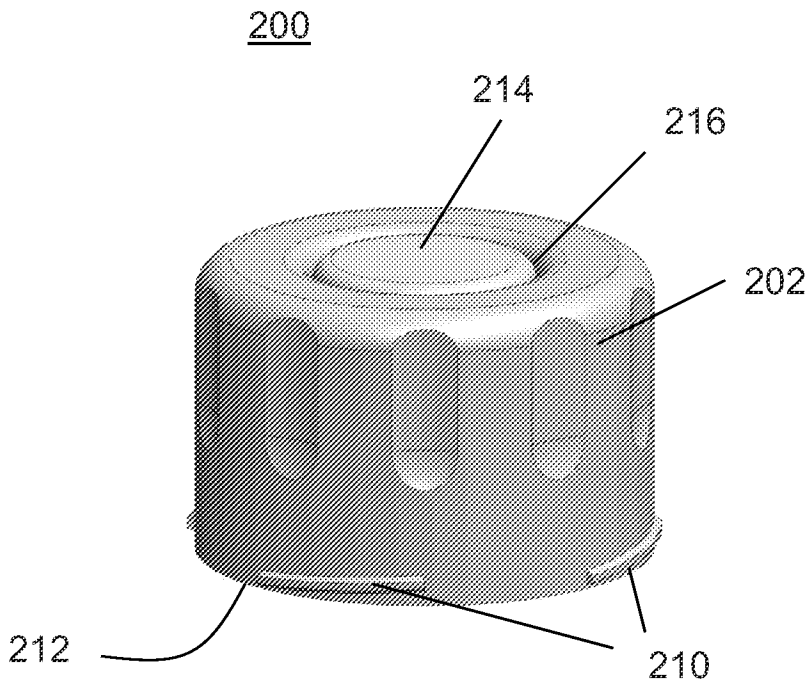

FIGURE 35

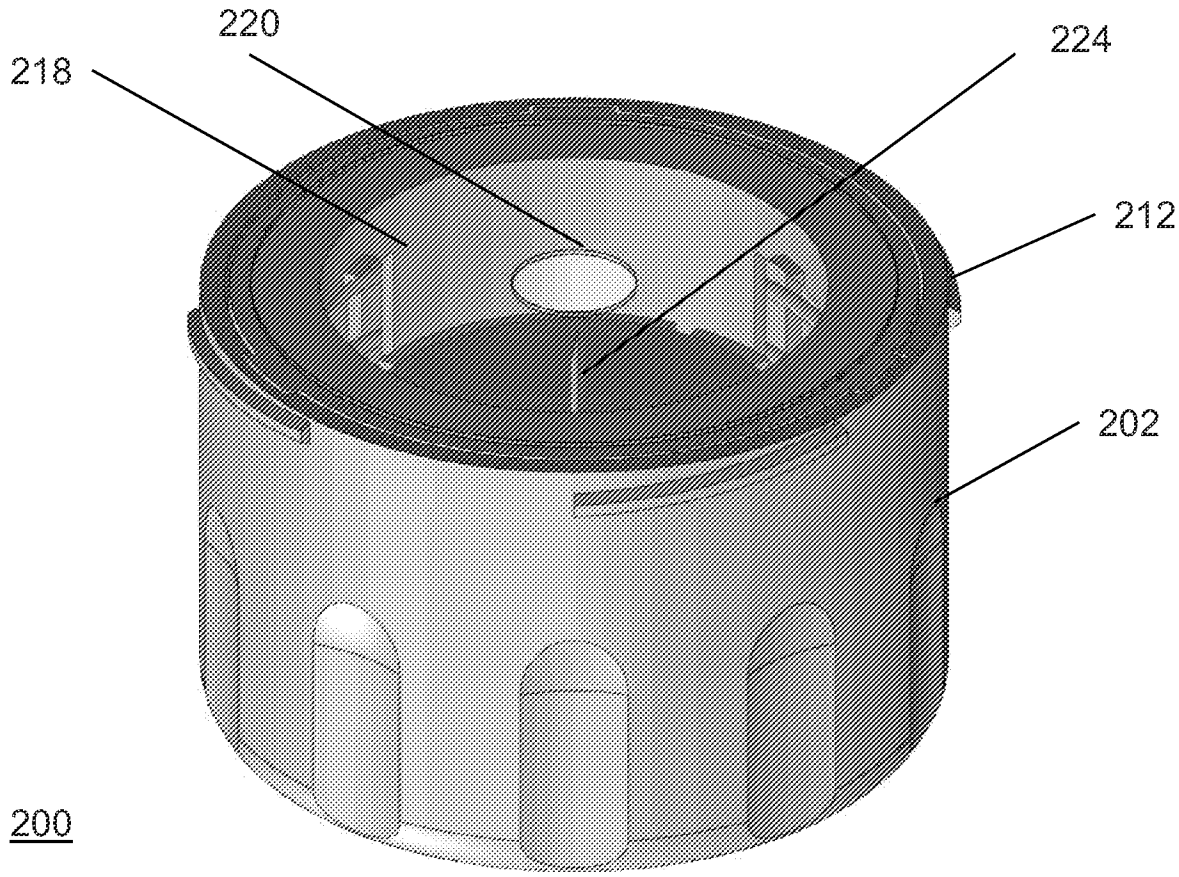

FIGURE 36

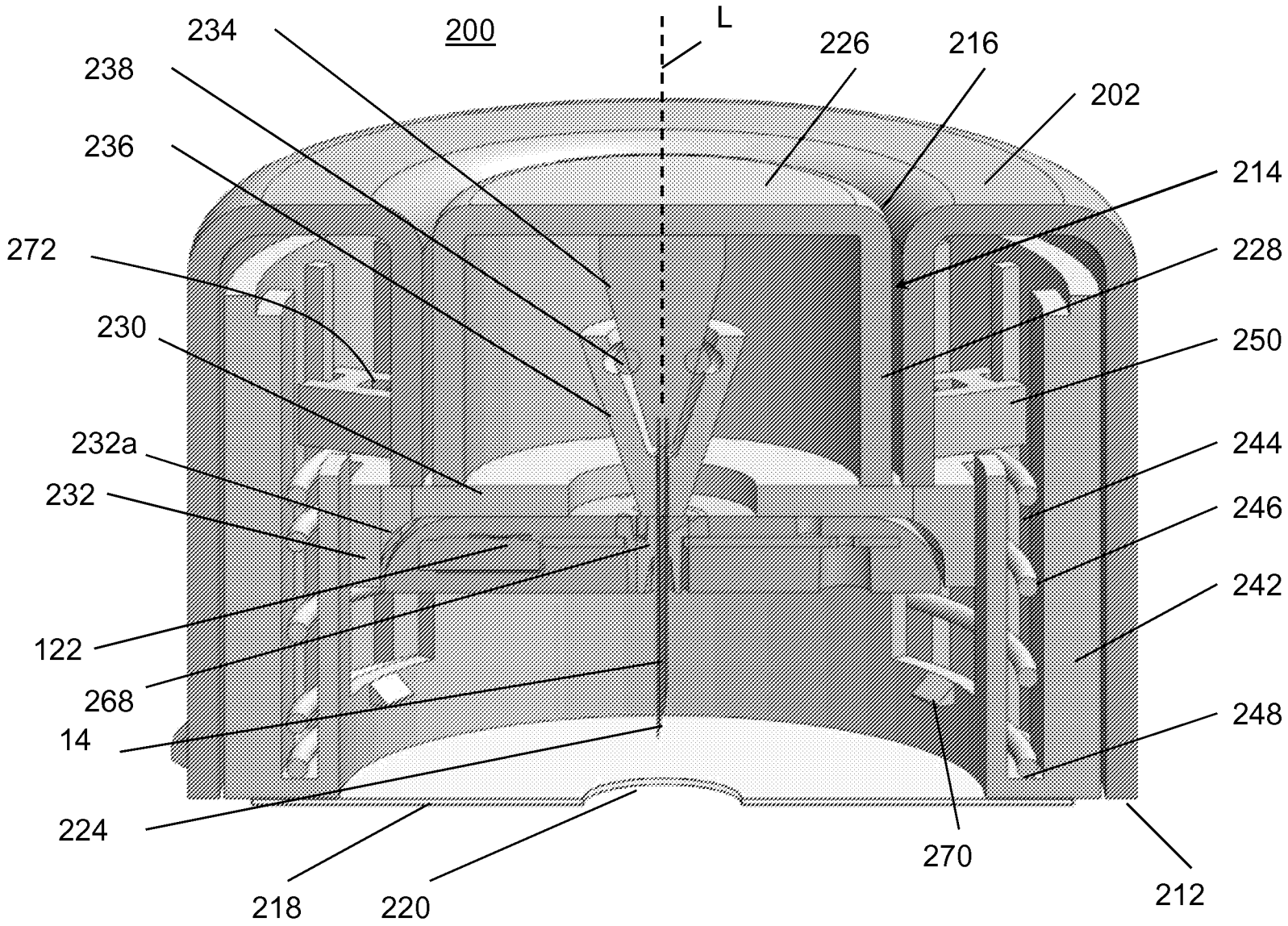
200
L
234
238
236
226
216
202
214
228
250
272
230
232a
232
244
246
242
122
268
14
248
224
218
220
270
212

FIGURE 37

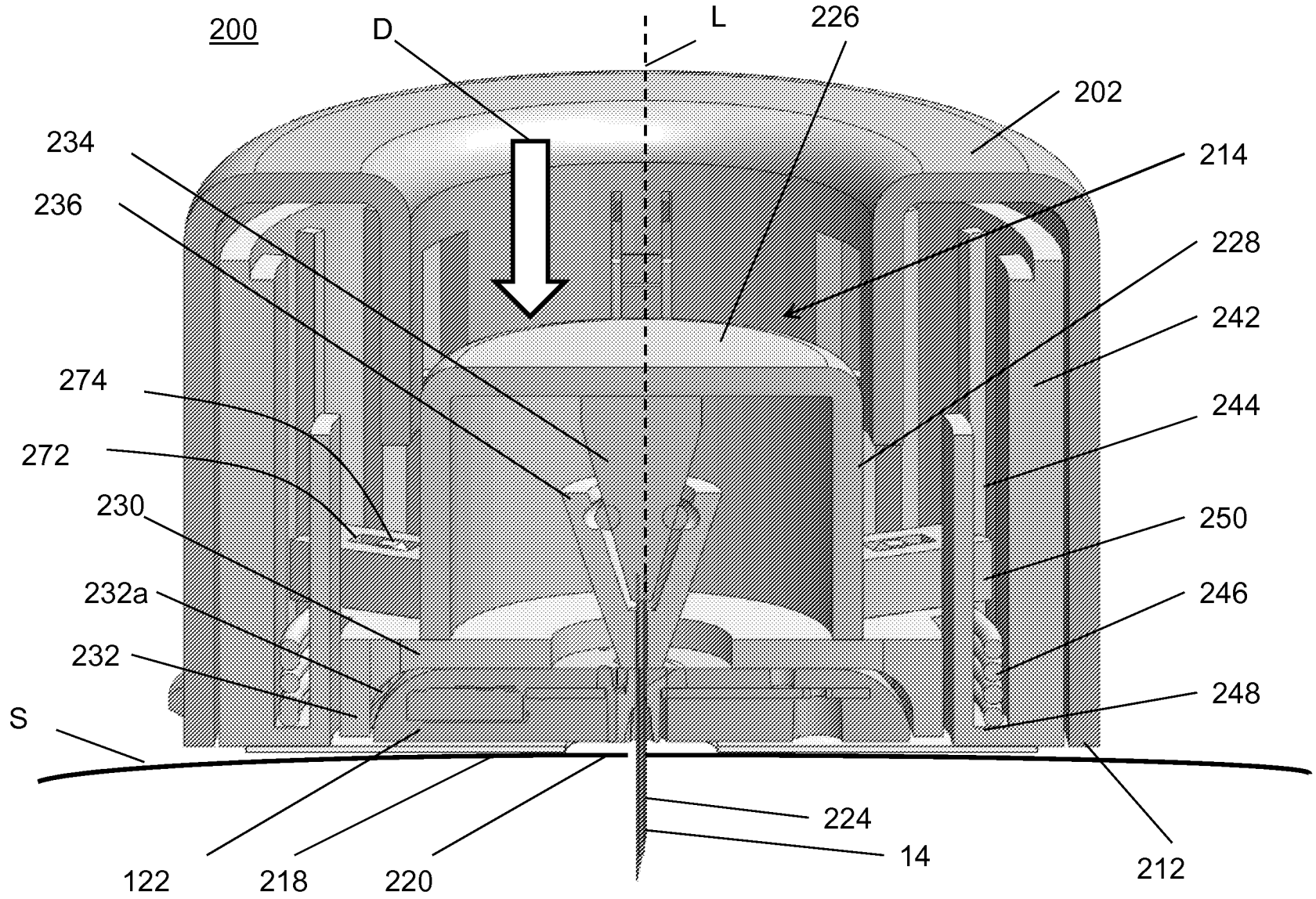
200
D
L
226
202
234
214
236
228
242
274
244
272
230
250
232a
246
232
248
S
224
14
122
218
220
212

FIGURE 38

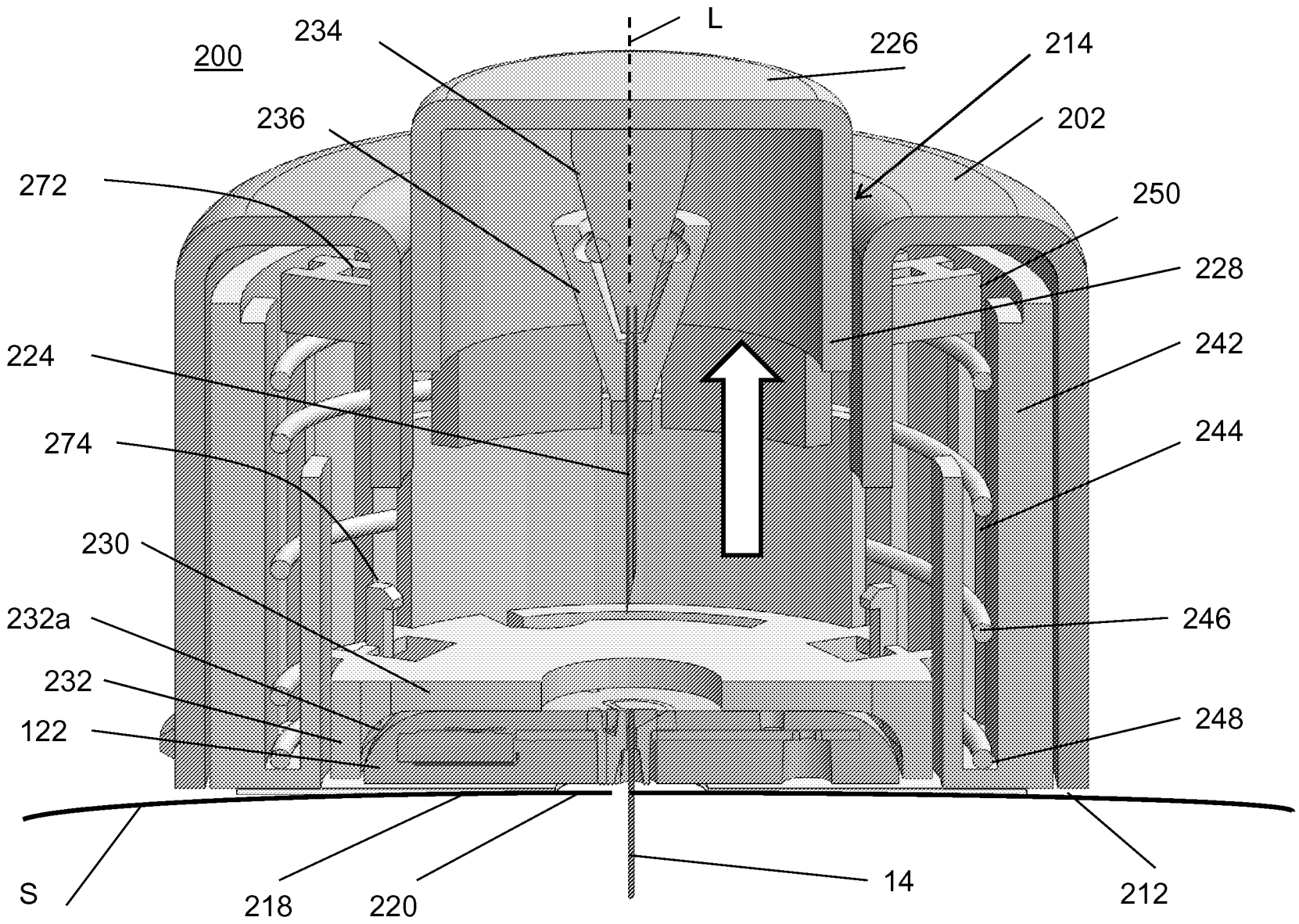
200
234
L
226
214
236
202
272
250
228
224
242
274
244
230
232a
246
232
122
248
S
218
220
14
212

FIGURE 39

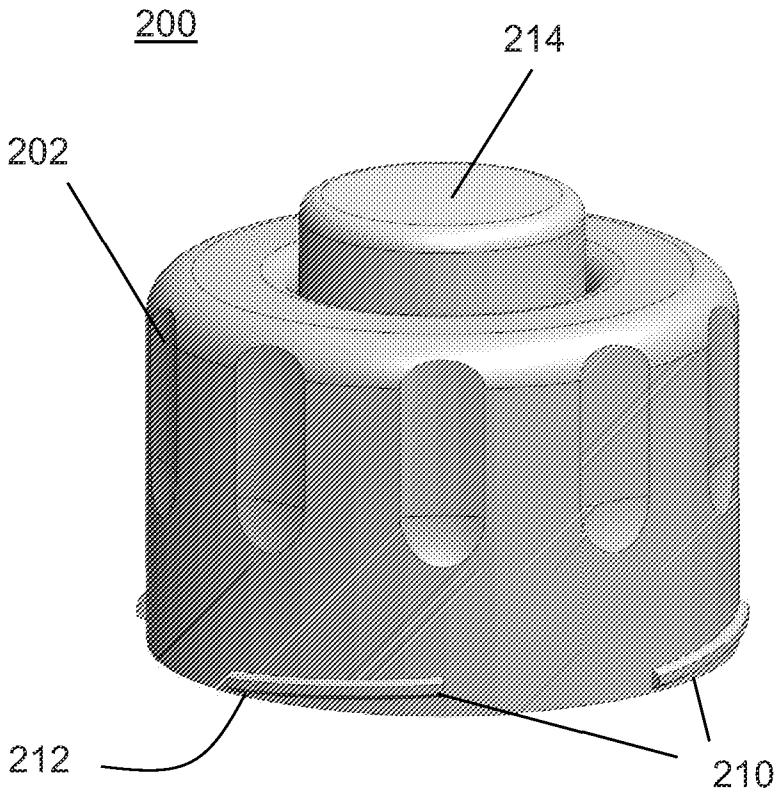

FIGURE 40

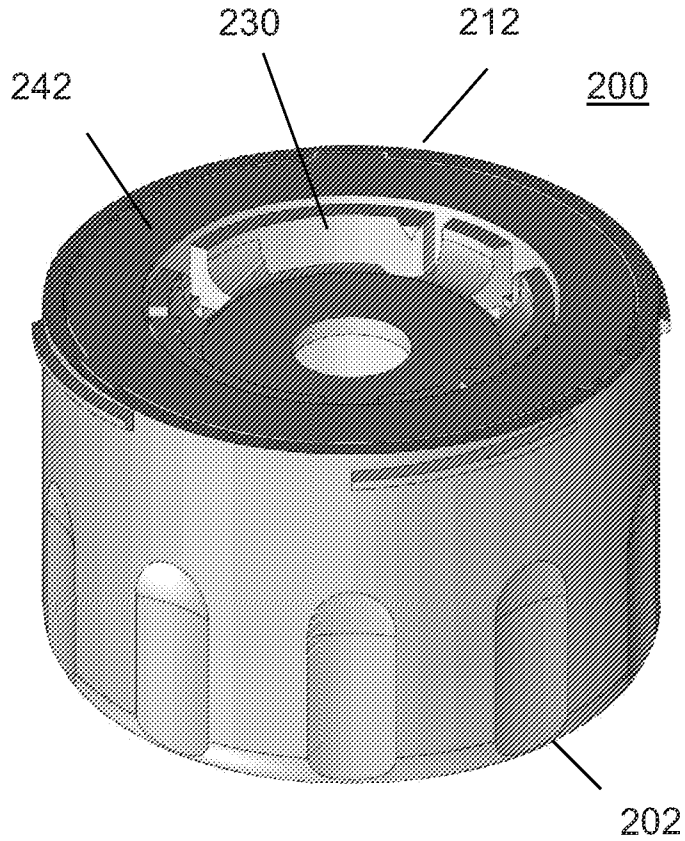

FIGURE 41

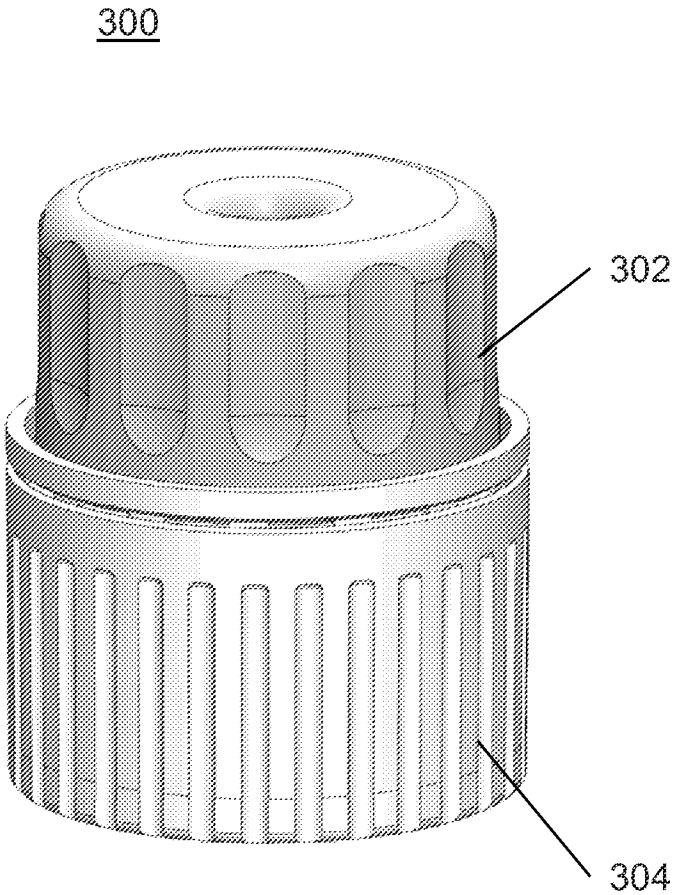

FIGURE 42

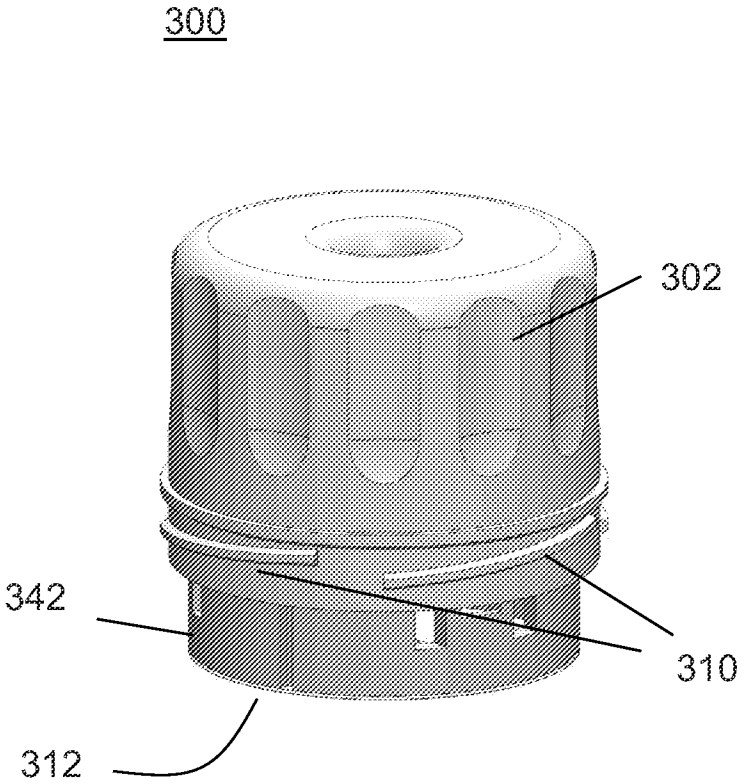

FIGURE 43

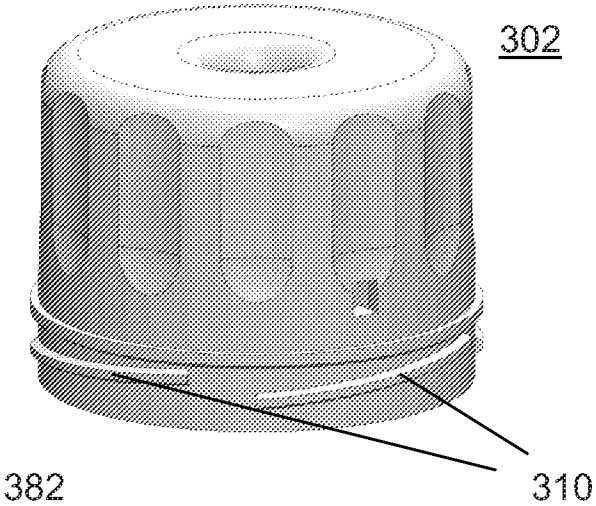

FIGURE 44

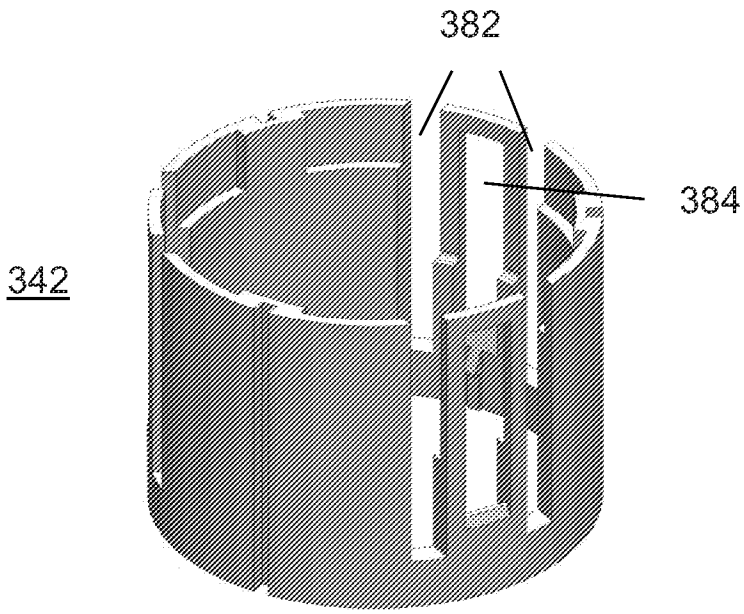

FIGURE 45

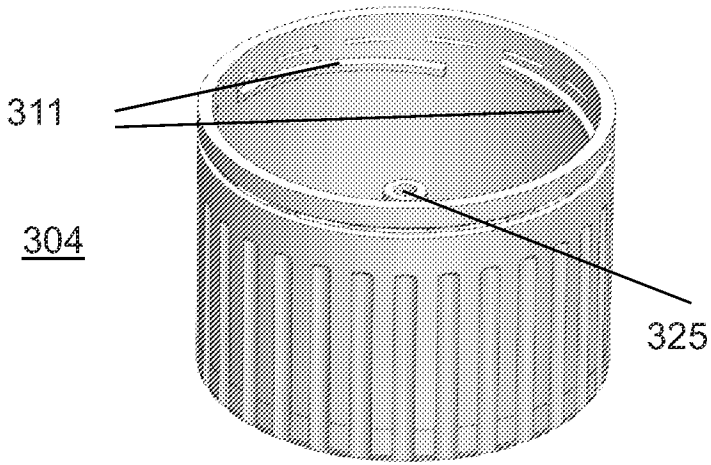

FIGURE 46

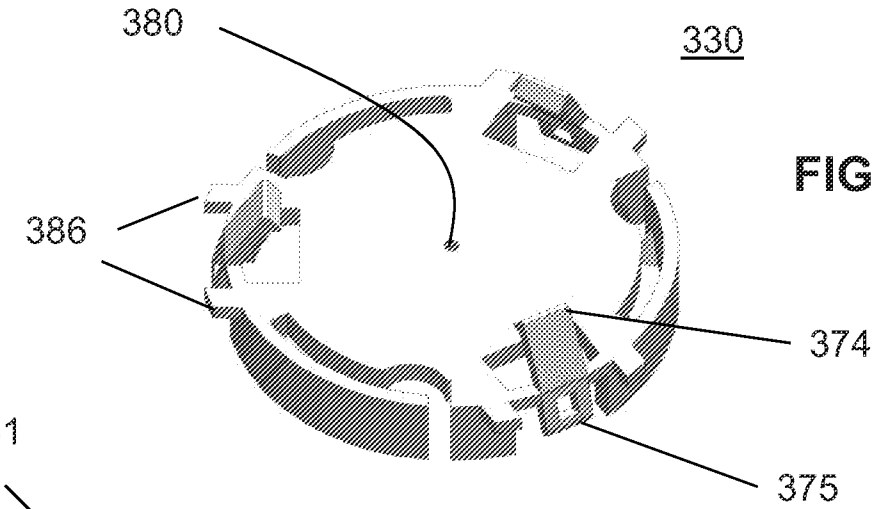

FIGURE 47

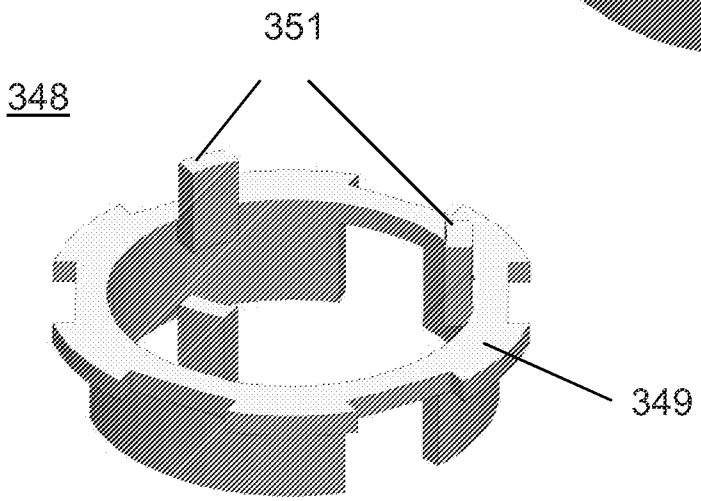

FIGURE 48

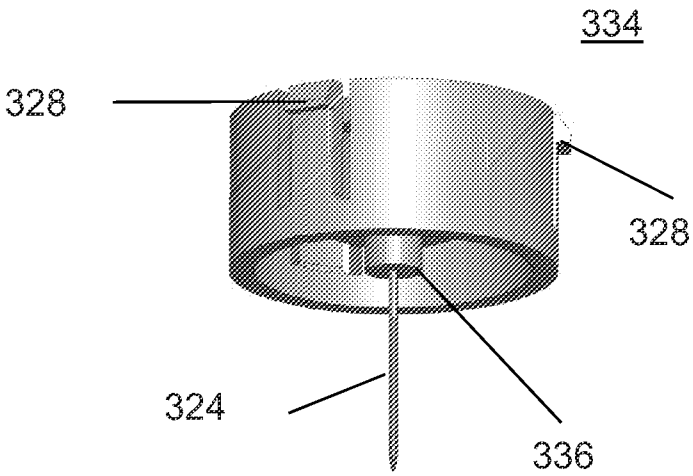

FIGURE 49

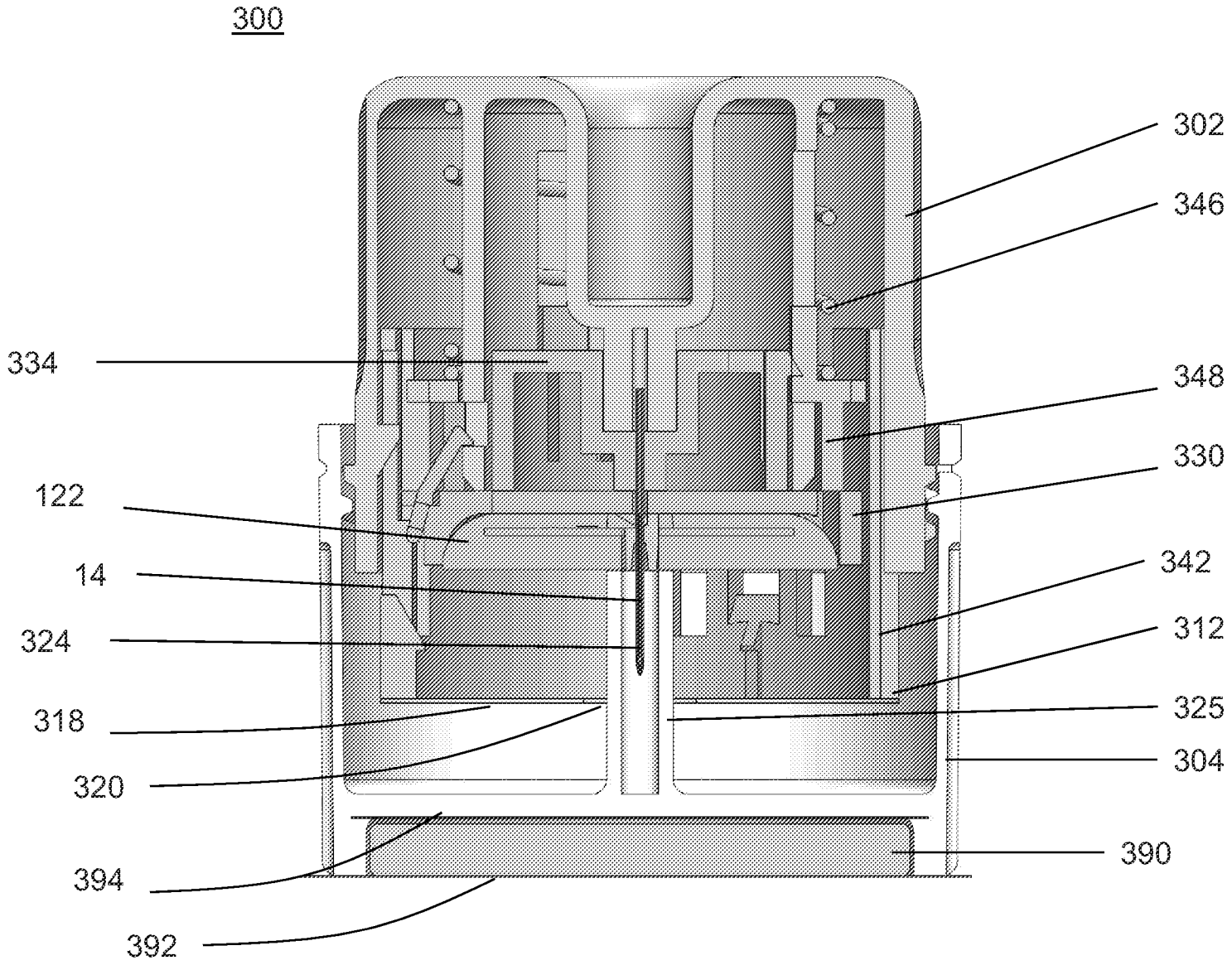
300
302
346
334
348
330
122
14
342
324
312
318
325
320
304
394
390
392

FIGURE 50

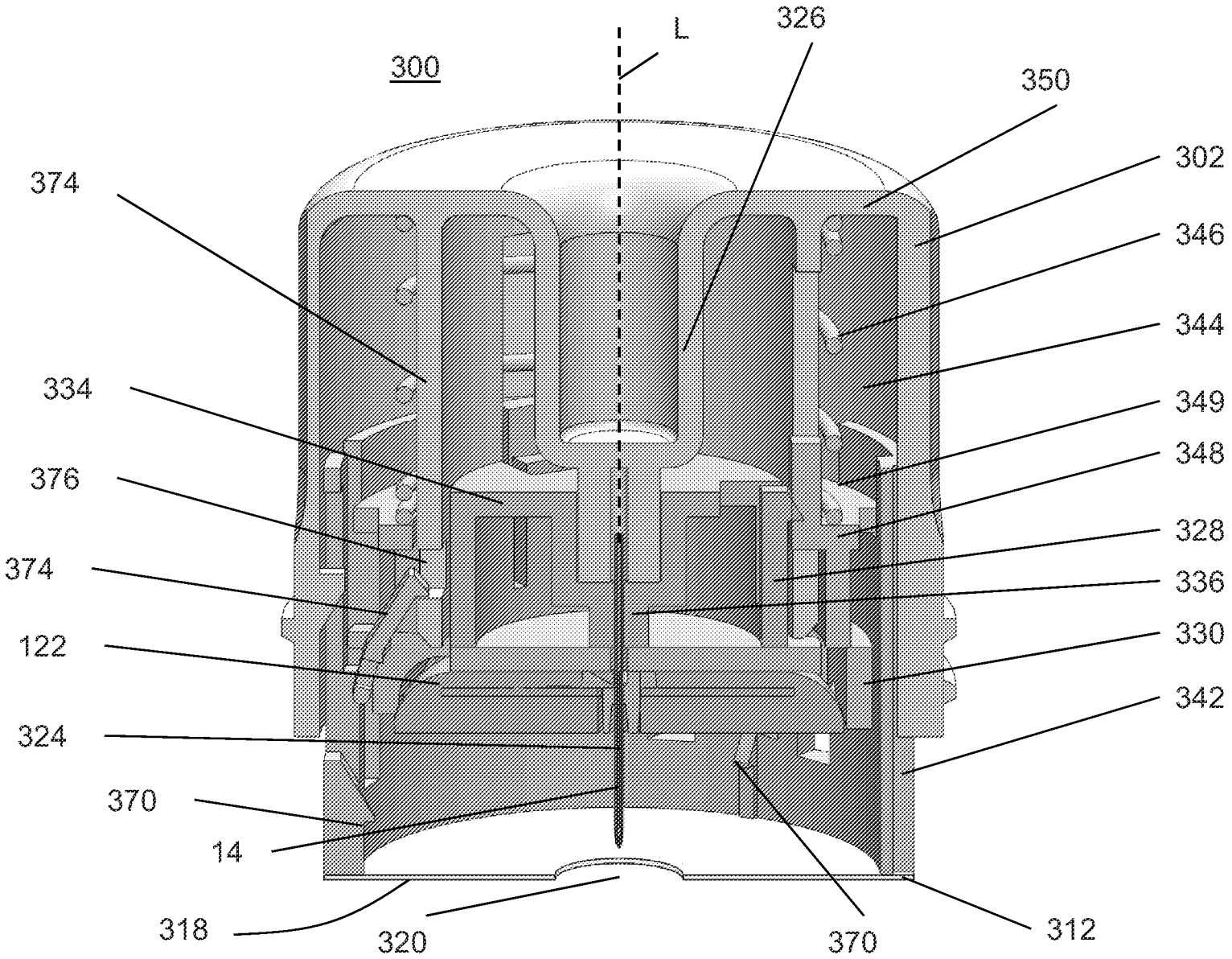
300
L
326
350
302
346
344
349
348
328
336
330
342
374
334
376
374
122
324
370
14
318
320
370
312

FIGURE 51

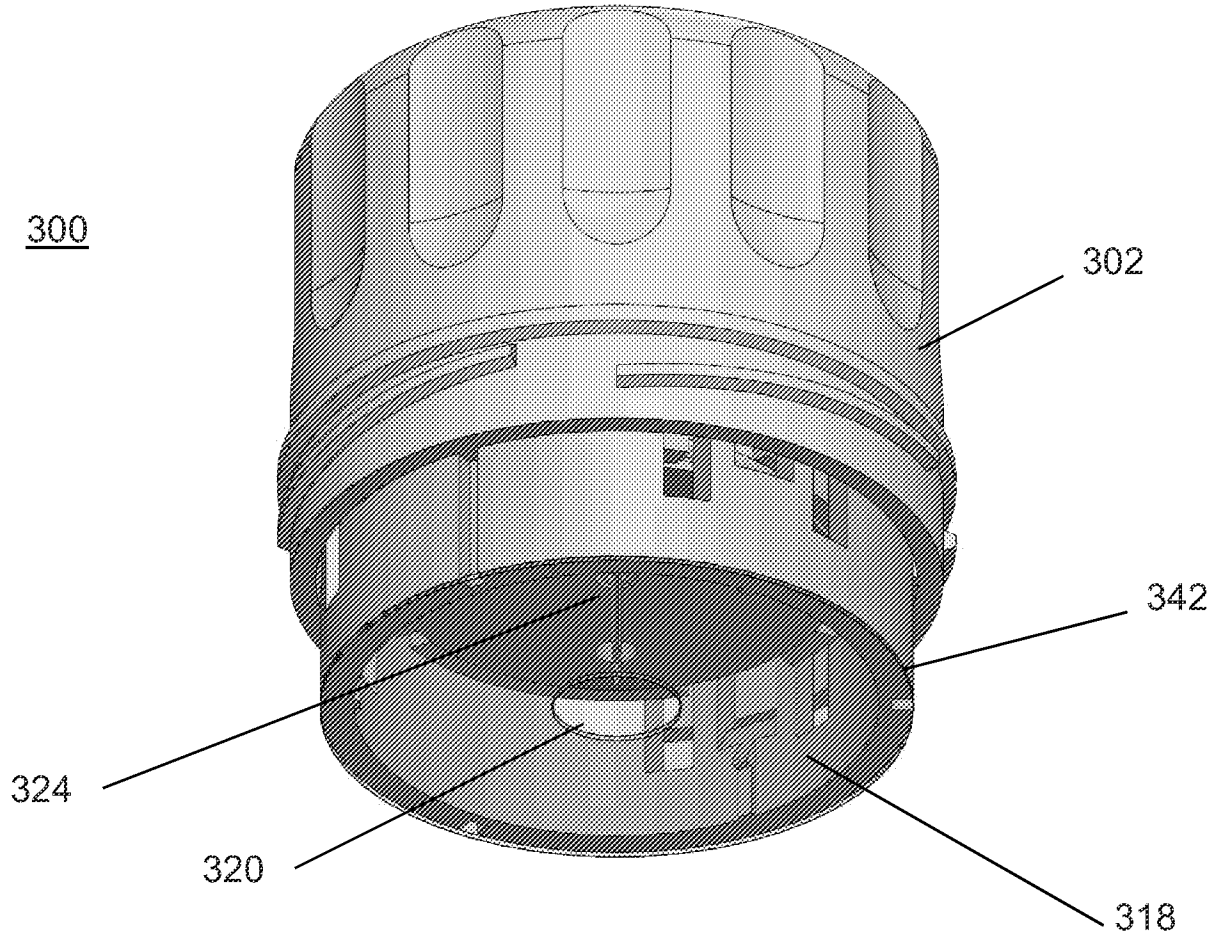

FIGURE 52

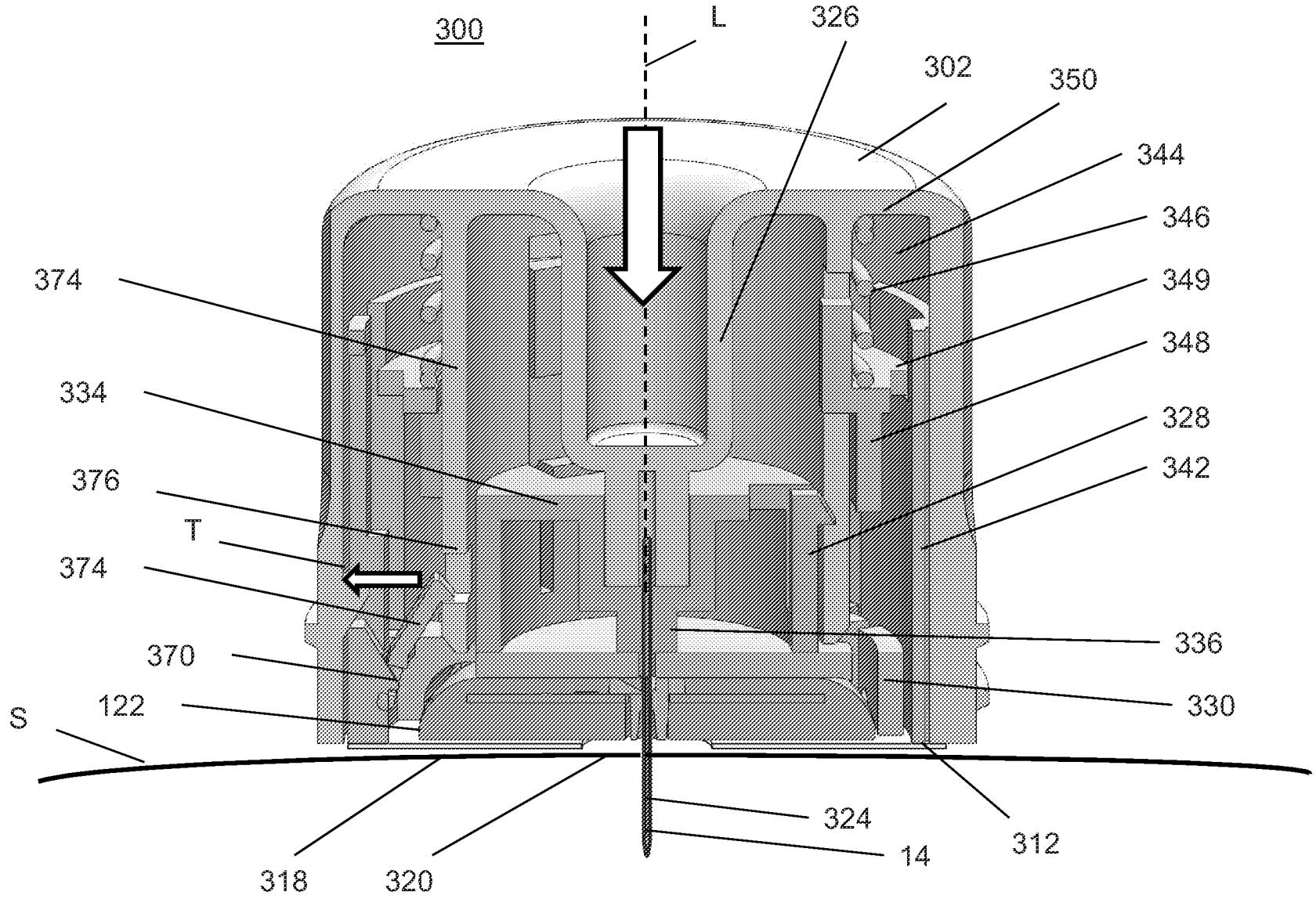
300
L
326
302
350
344
346
349
348
328
342
374
334
376
T
374
370
122
S
336
330
324
14
312
318
320

FIGURE 53

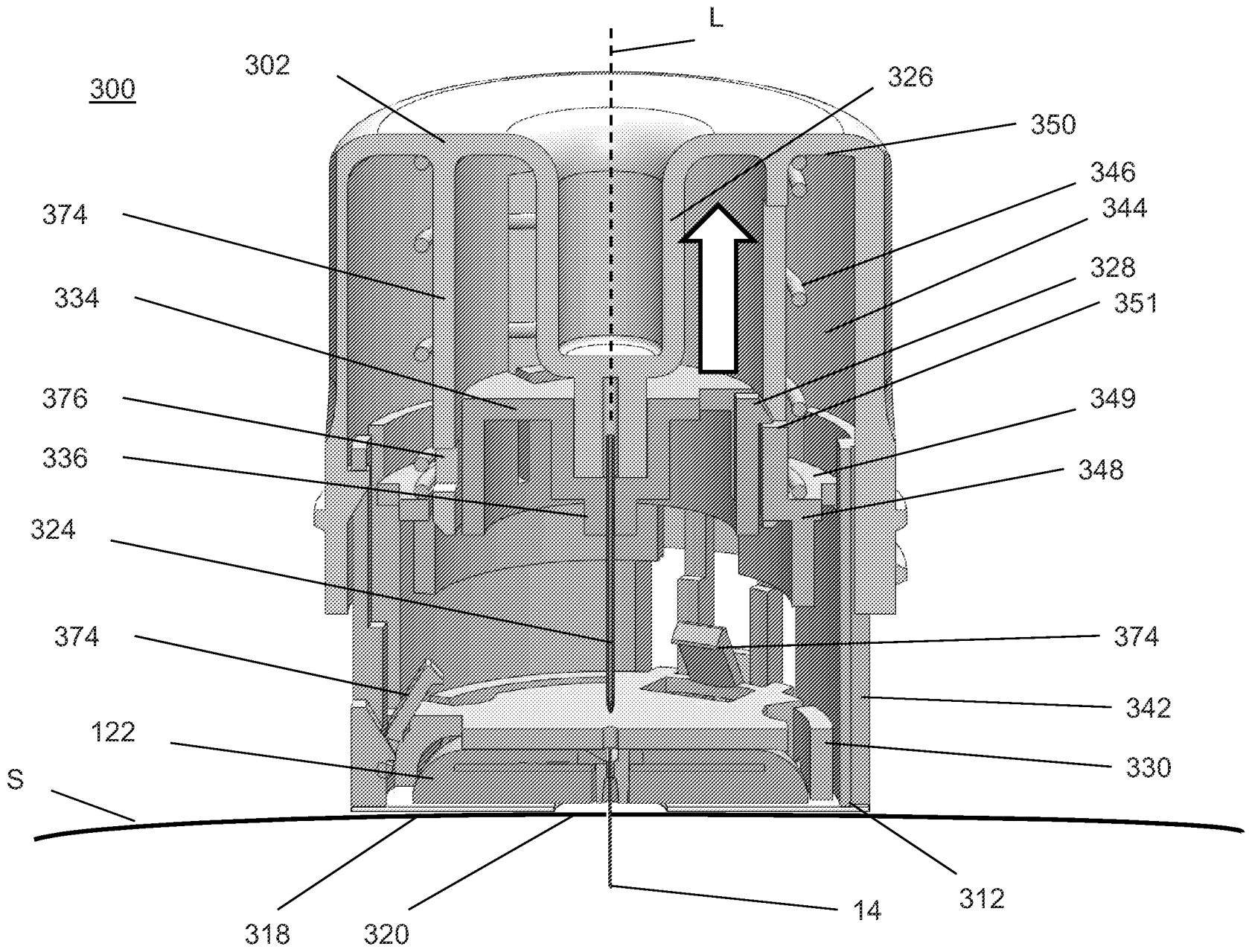
L
300
302
326
350
346
344
374
328
334
351
376
349
336
348
324
374
374
342
122
330
S
318
320
14
312

FIGURE 54

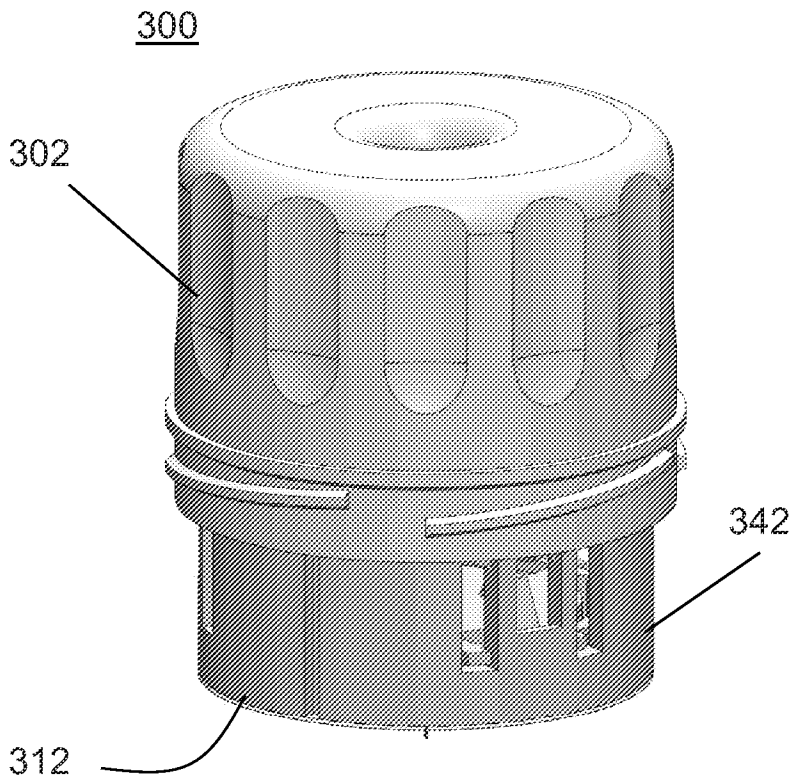

FIGURE 55

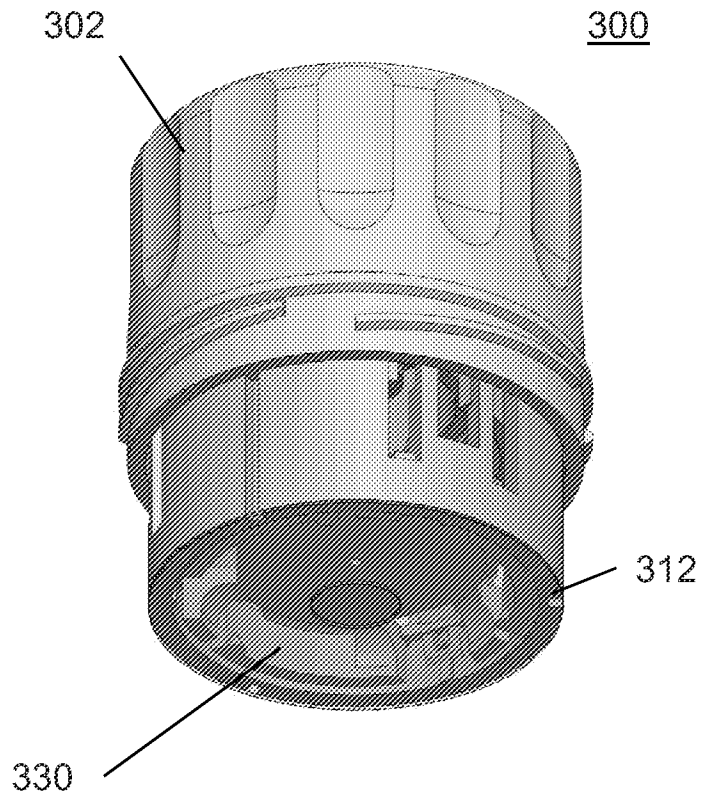

FIGURE 56

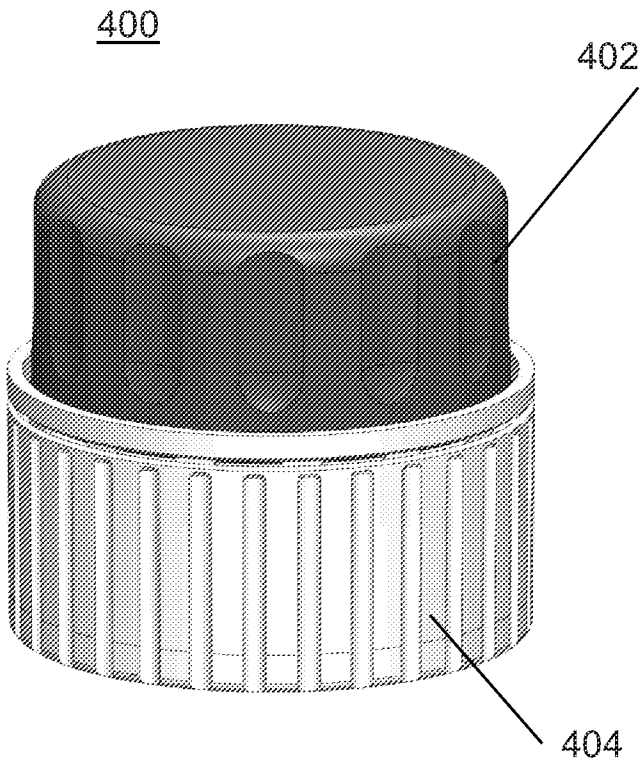

FIGURE 57

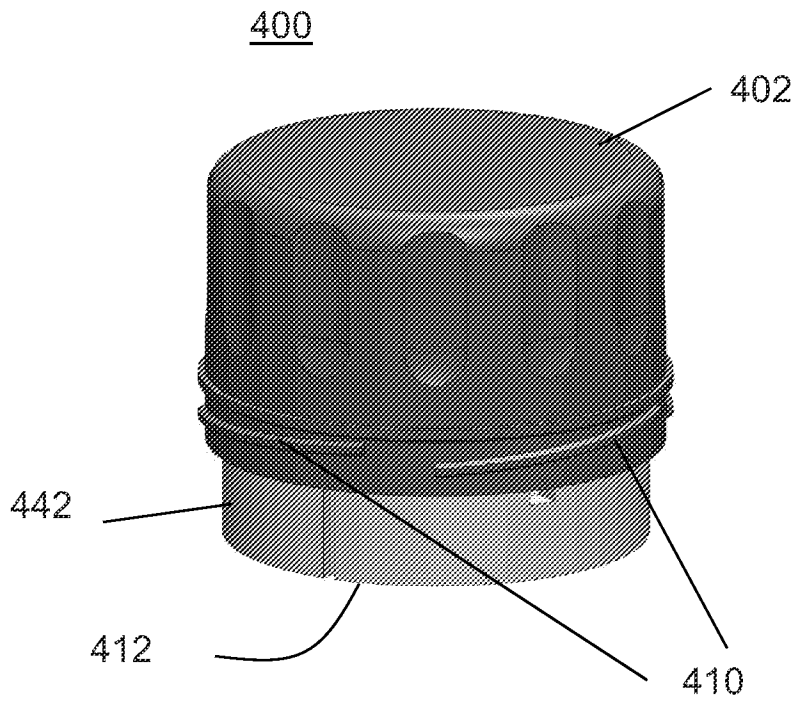

FIGURE 58

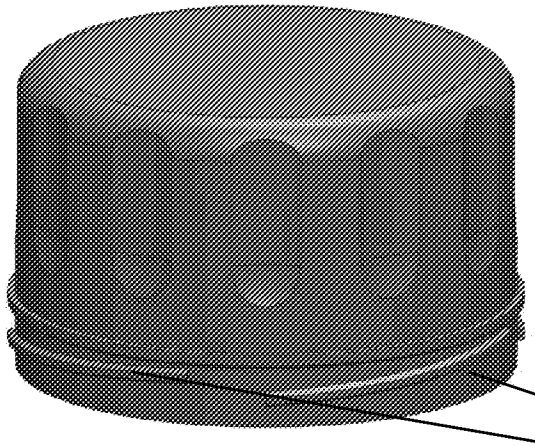

FIGURE 59

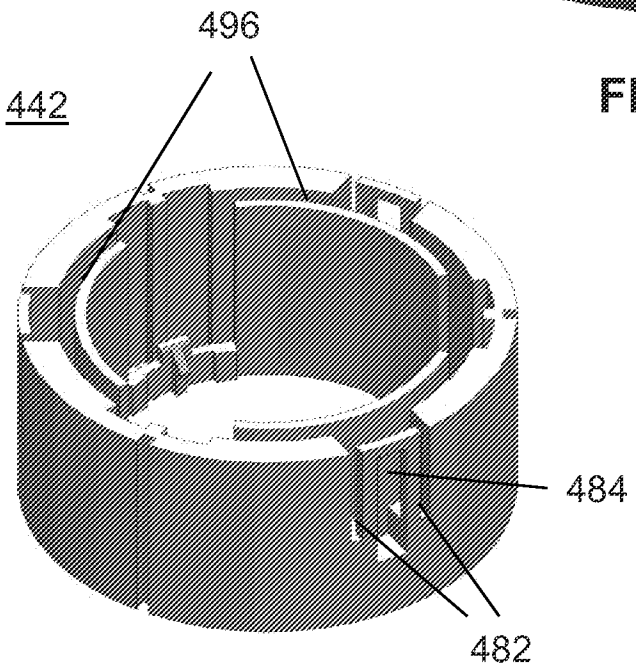

FIGURE 60

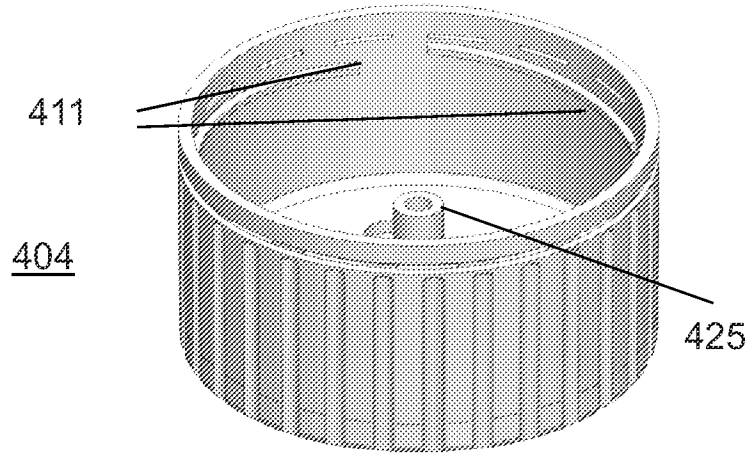

FIGURE 61

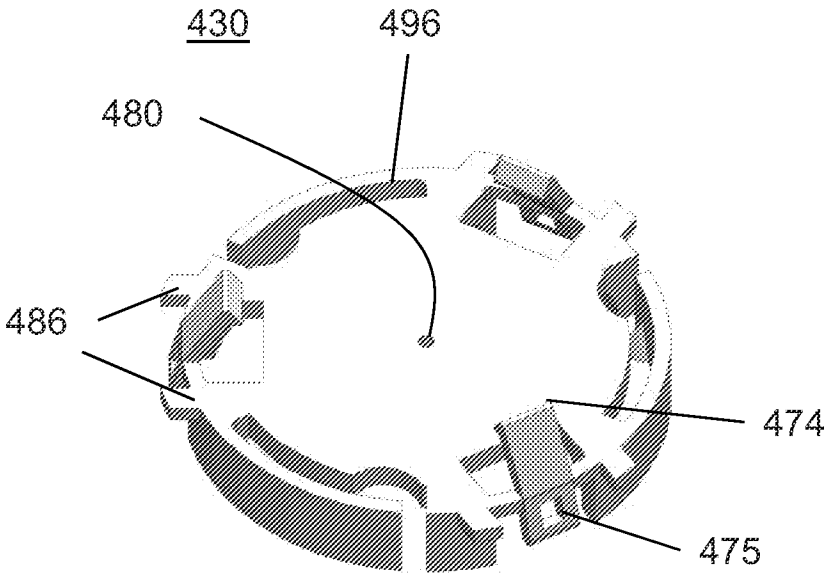

FIGURE 62

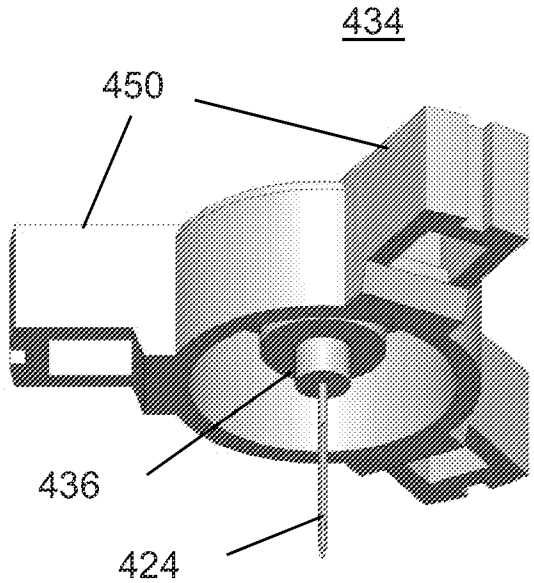

FIGURE 63

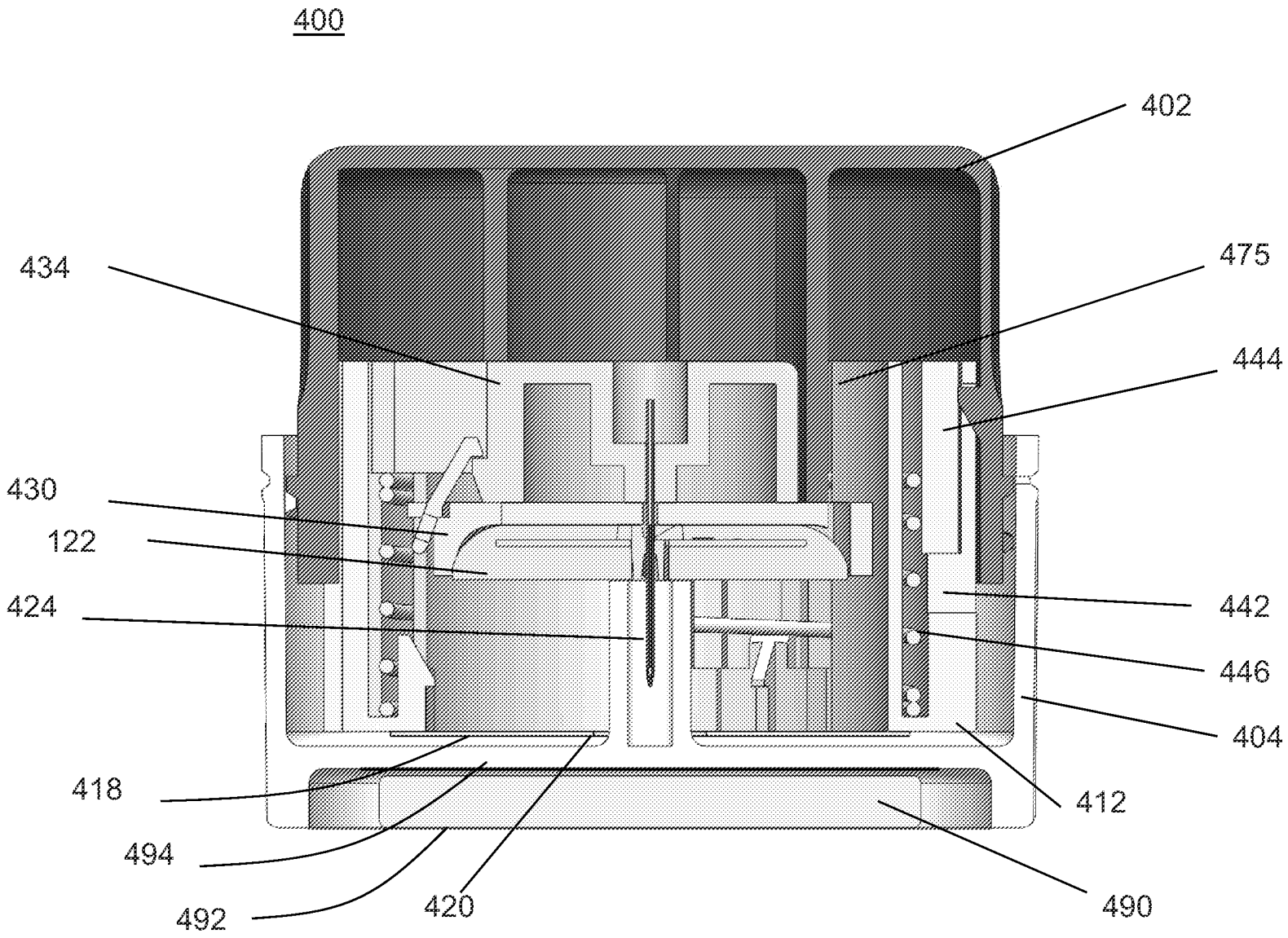
400
402
434
475
444
430
122
424
442
446
404
418
412
494
492
420
490

FIGURE 64

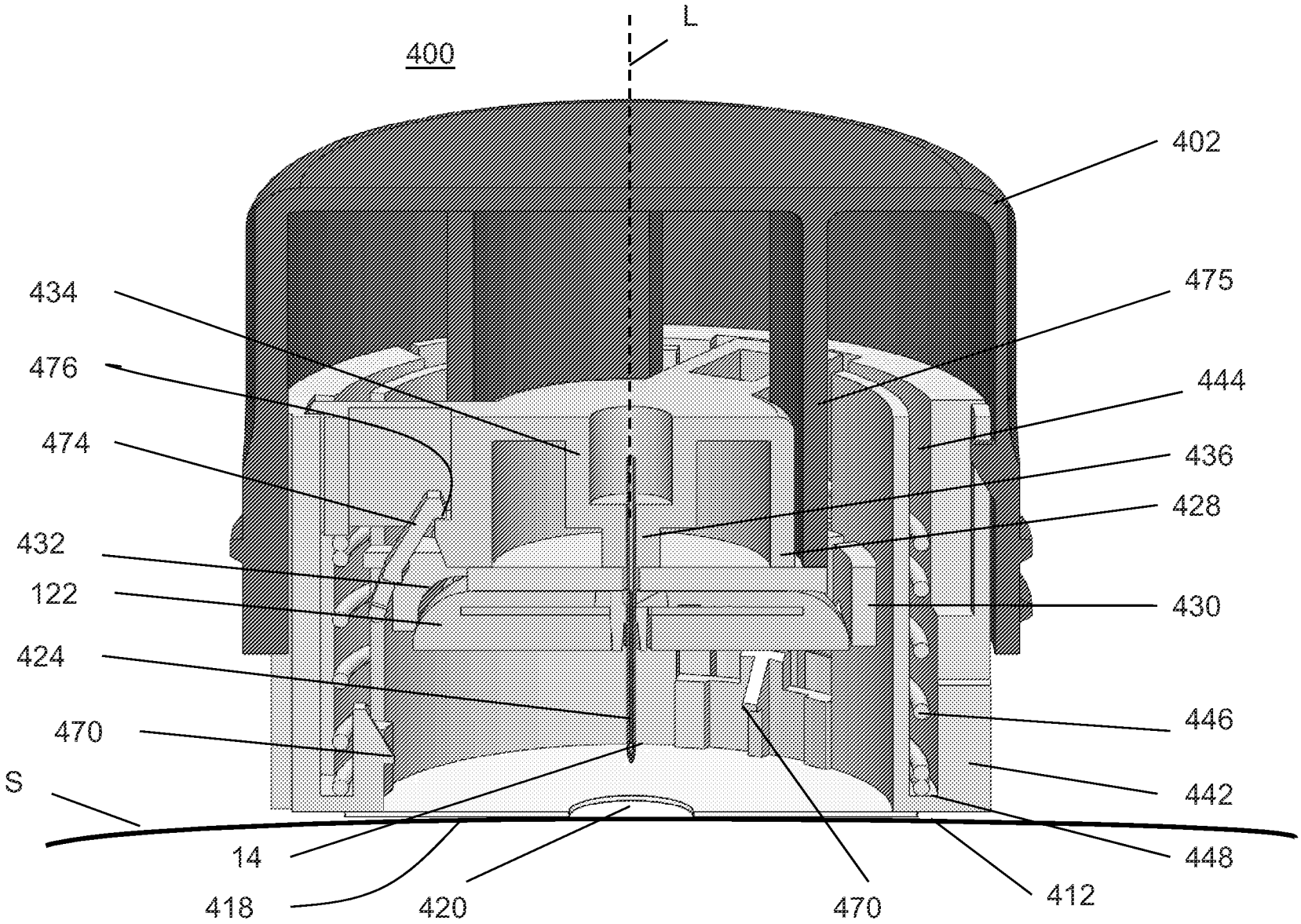
L
400
402
475
444
436
428
430
446
442
448
412
470
420
418
14
S
470
424
122
432
474
476
434

FIGURE 65

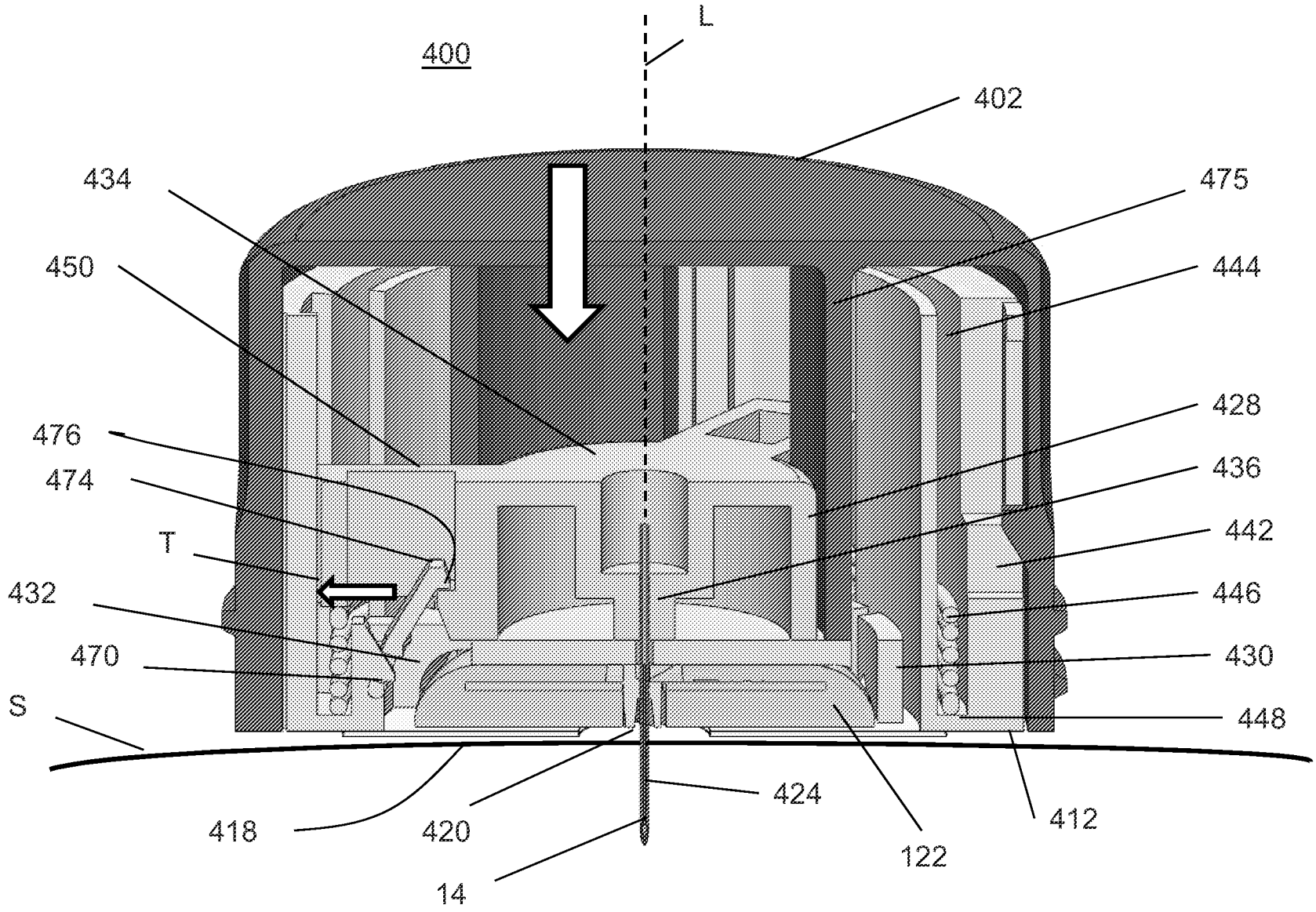
L
400
402
434
475
450
444
428
476
474
436
T
442
432
446
470
430
S
448
424
418
420
412
122
14

FIGURE 66

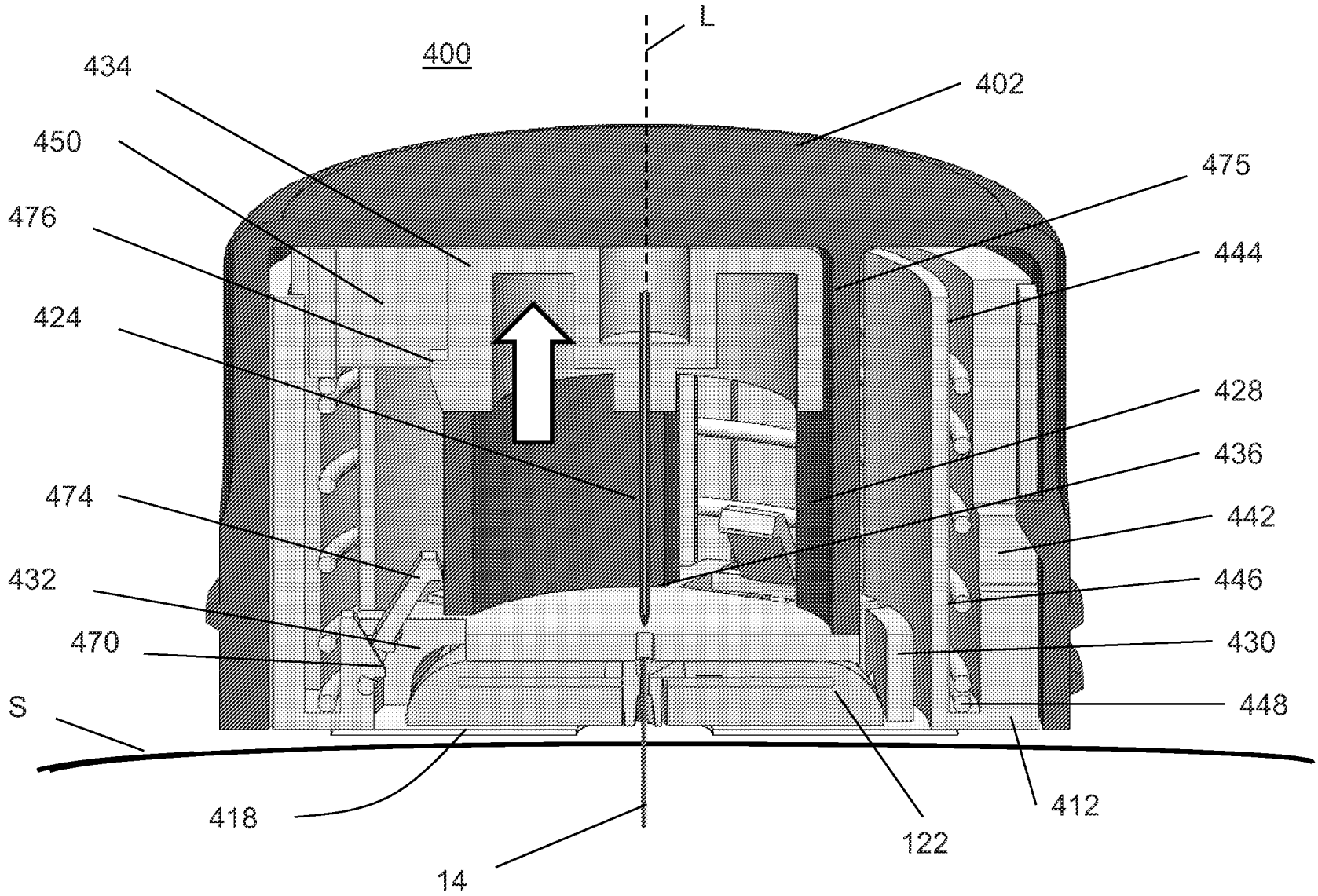
L
400
434
402
450
475
476
444
424
428
436
474
442
432
446
470
430
S
448
418
412
122
14

FIGURE 67

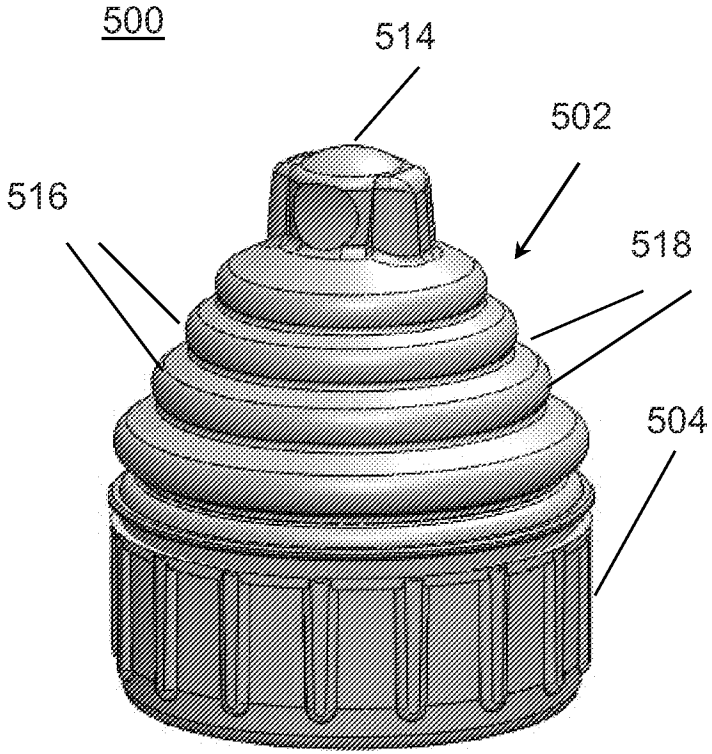

FIGURE 68

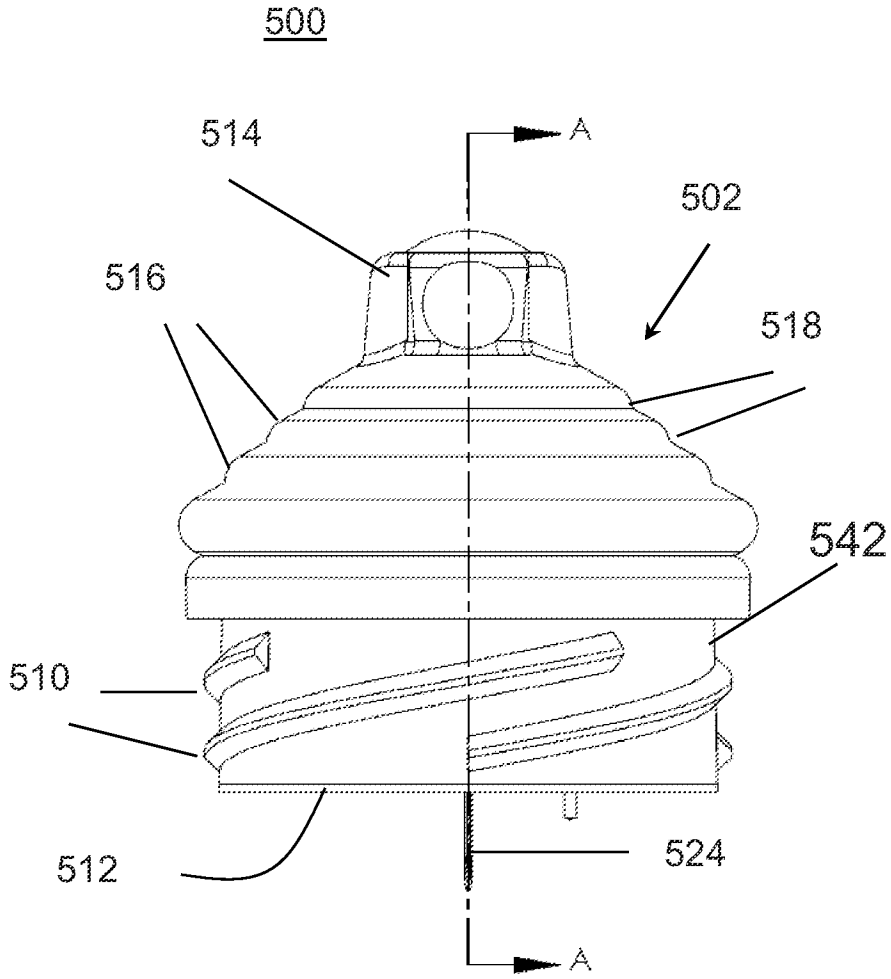

FIGURE 69

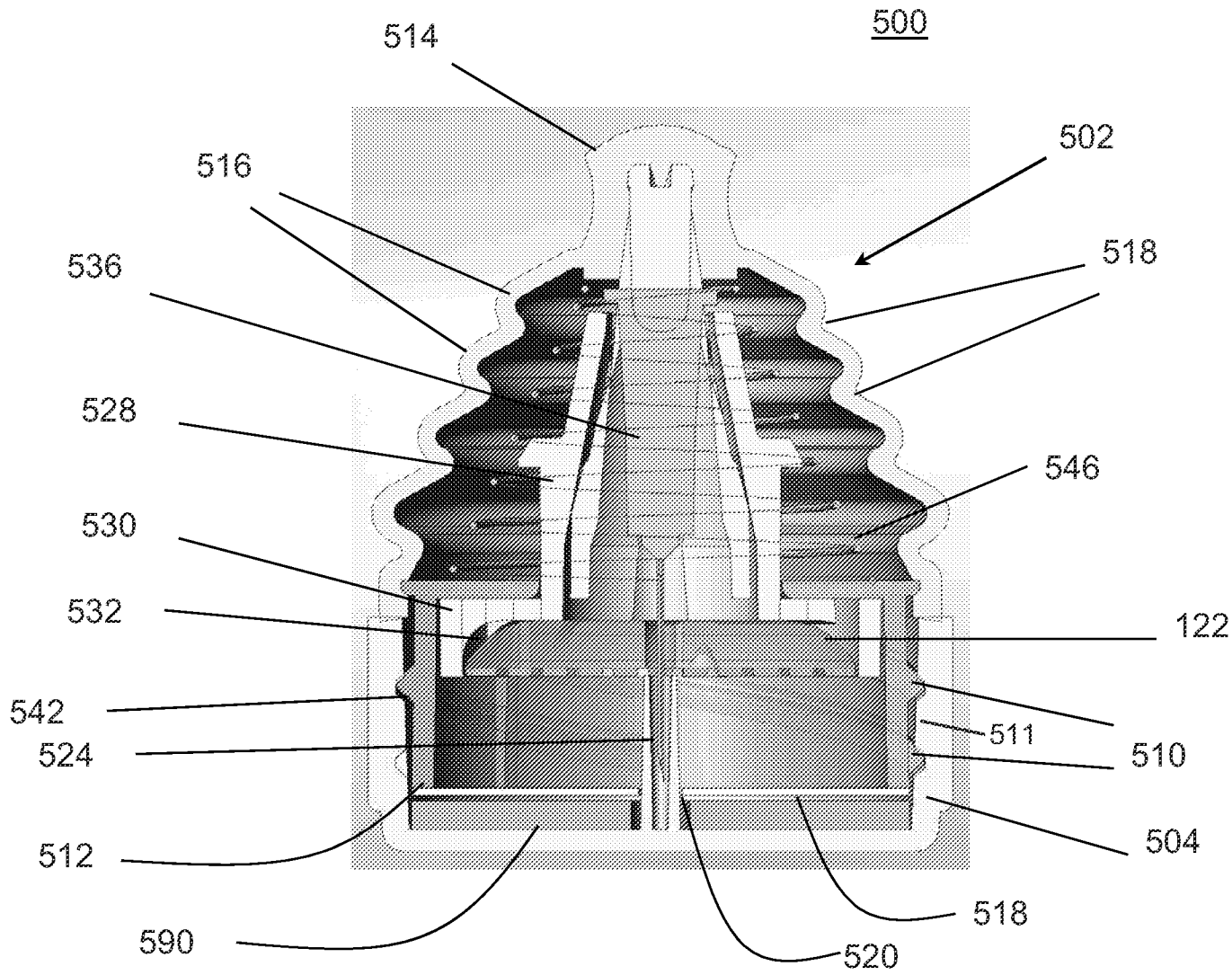
500
514
502
516
518
536
528
546
530
532
122
542
511
524
510
504
512
518
590
520

FIGURE 70

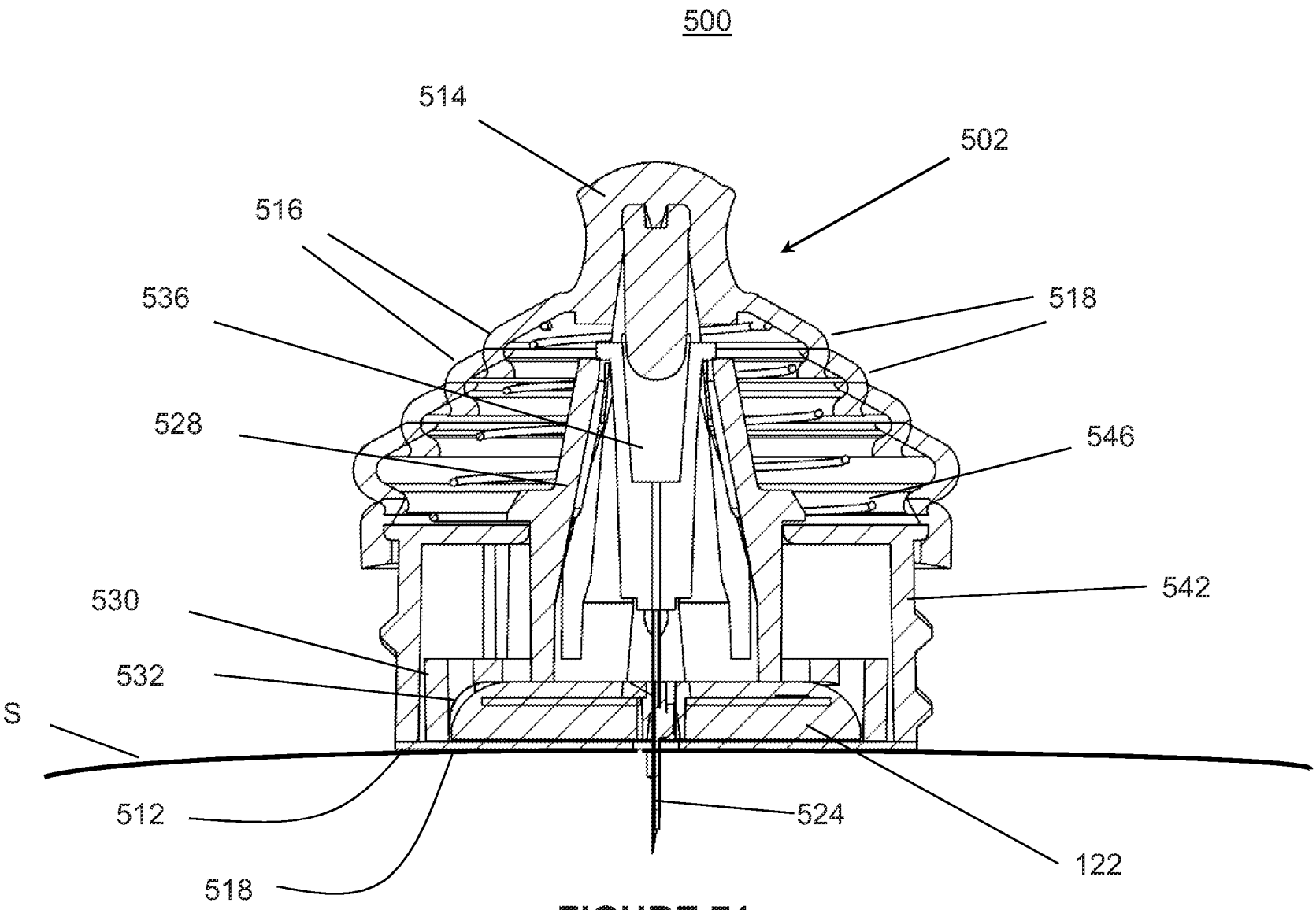

FIGURE 71

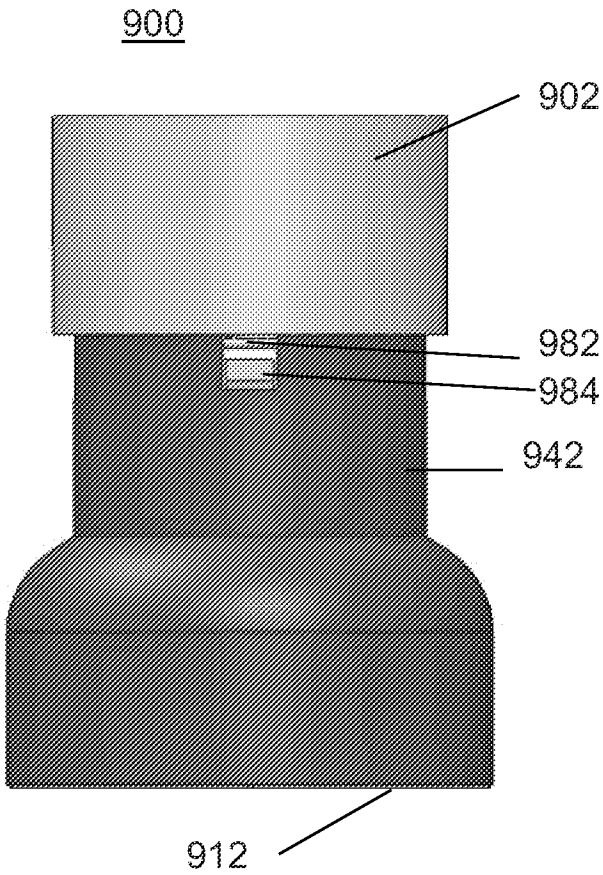

FIGURE 72

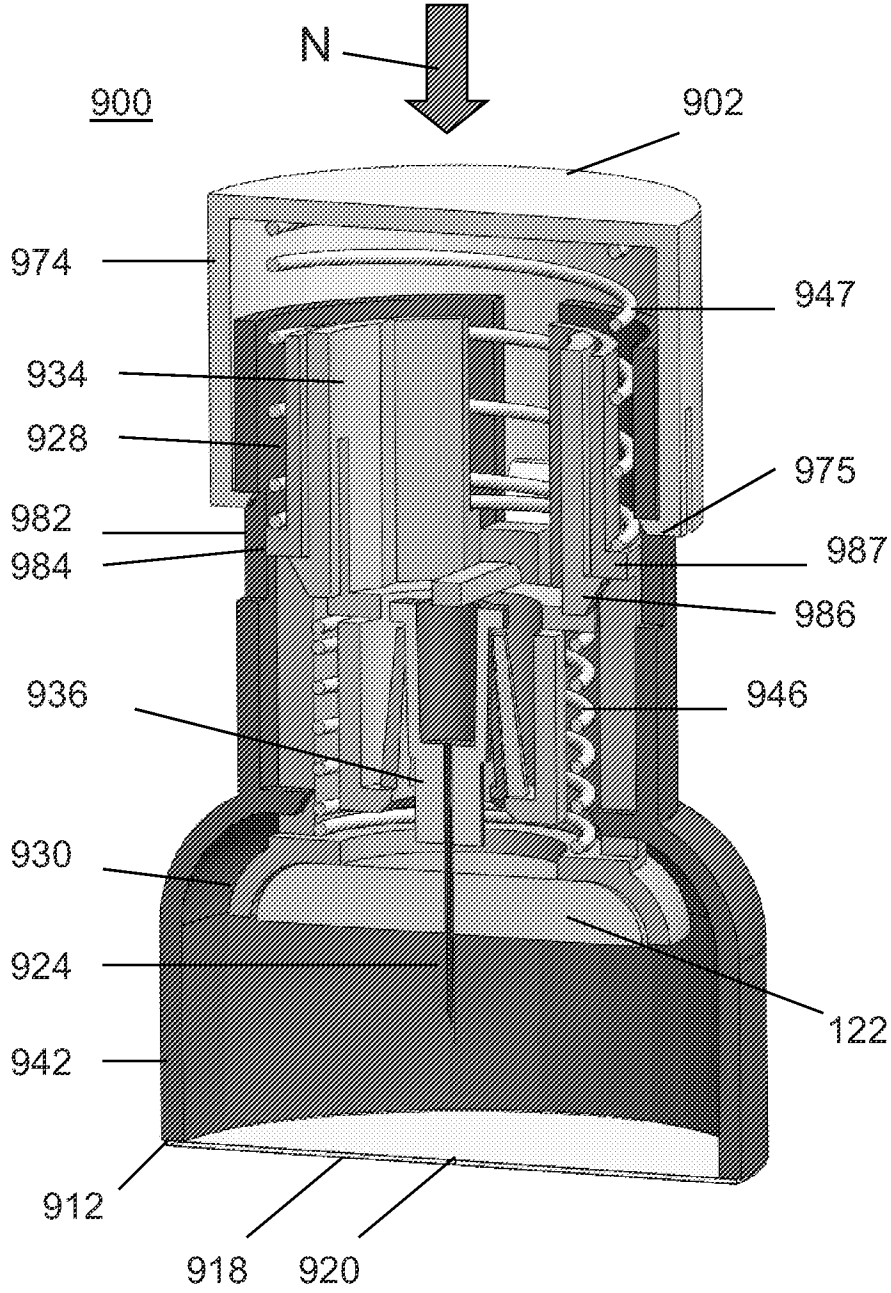

FIGURE 73

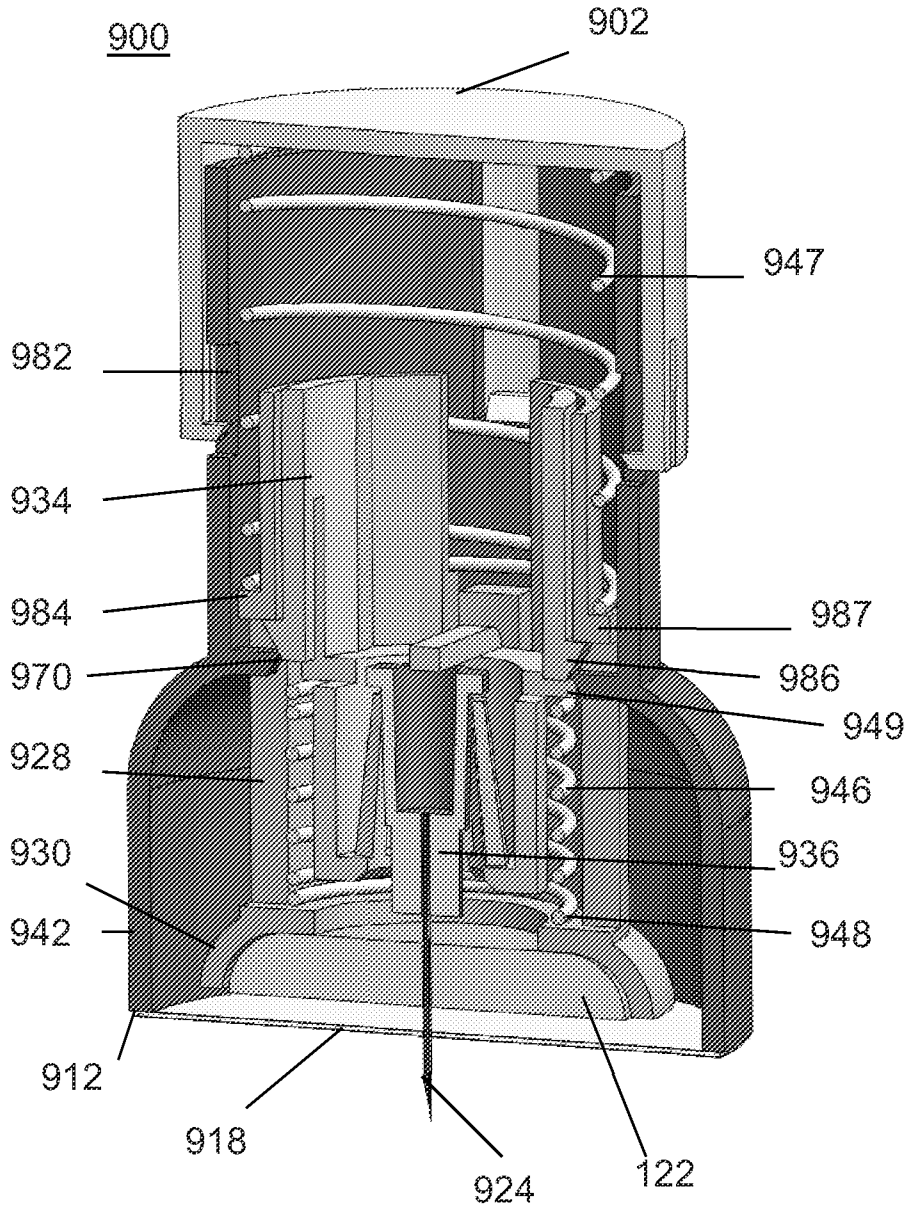

FIGURE 74

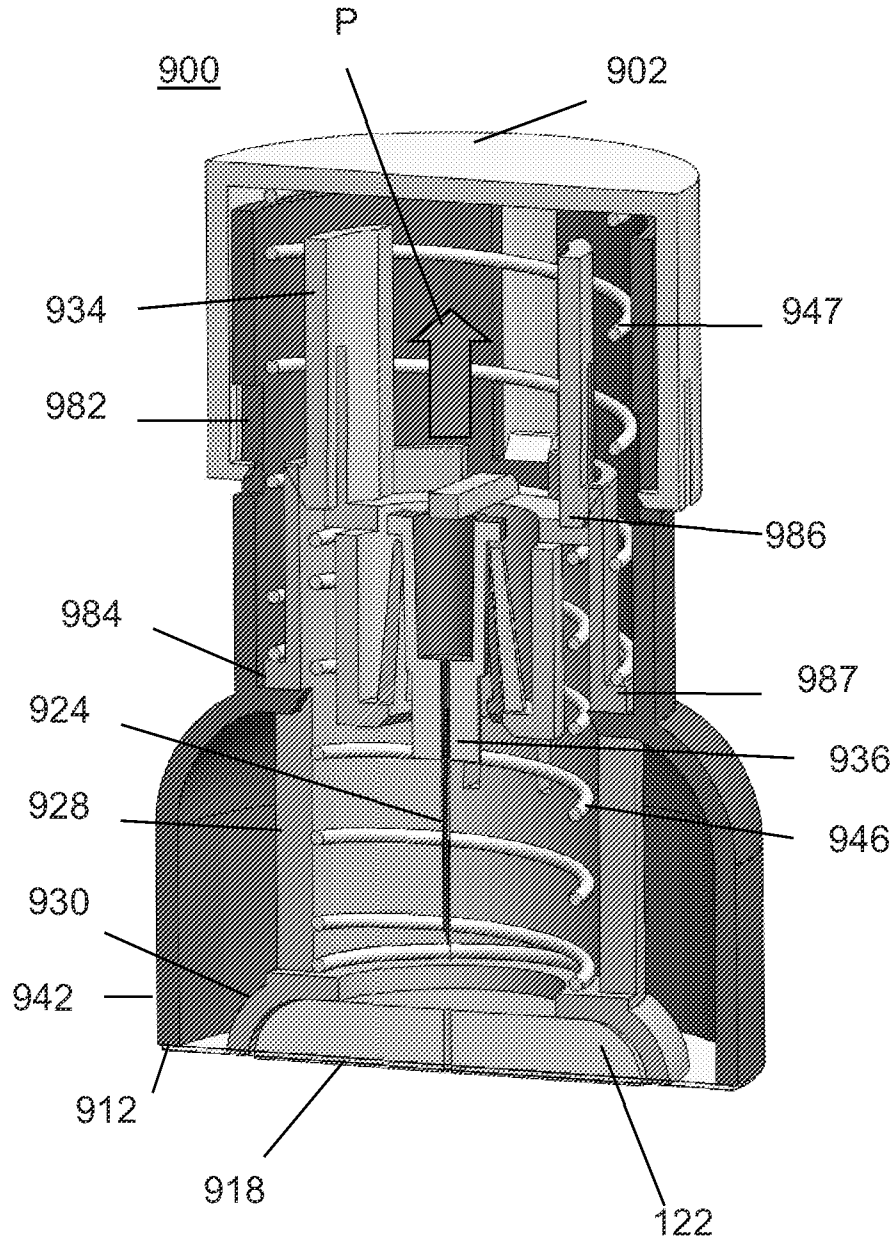

FIGURE 75

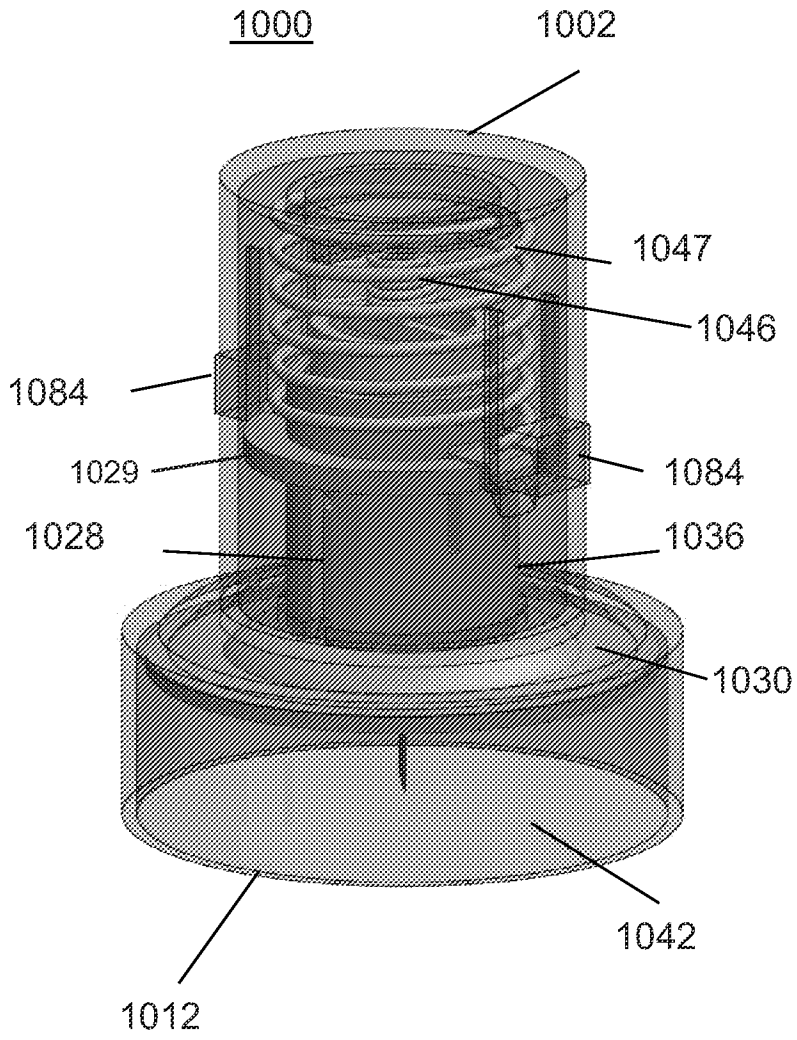

FIGURE 76

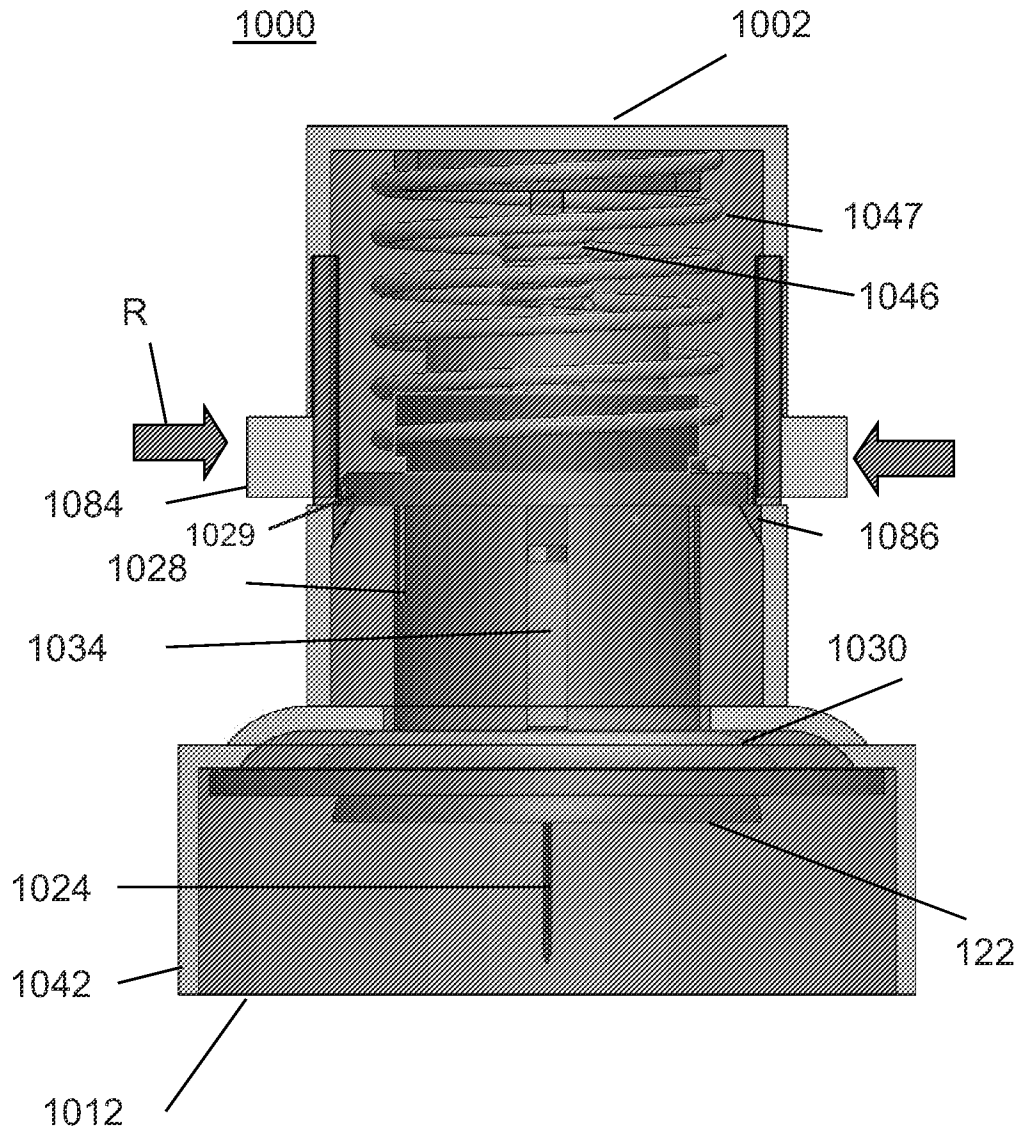

FIGURE 77

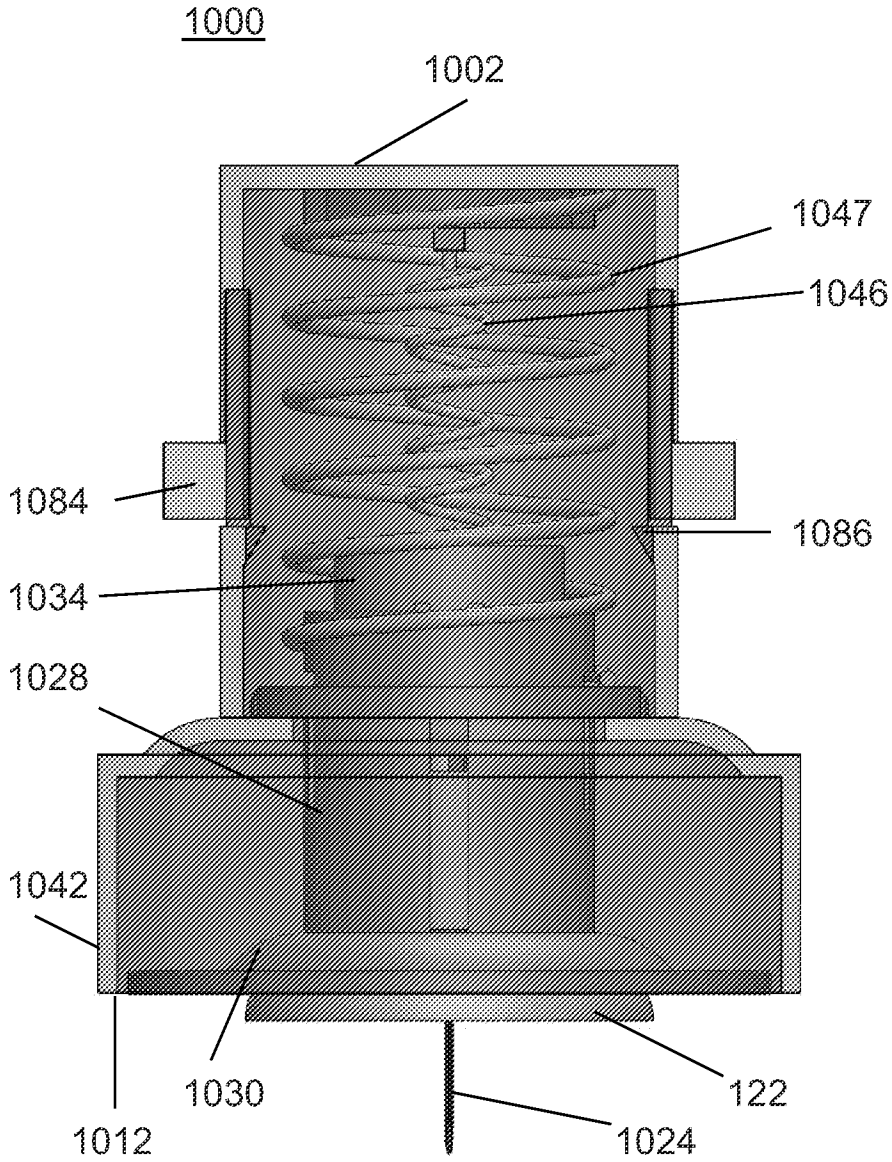

FIGURE 78

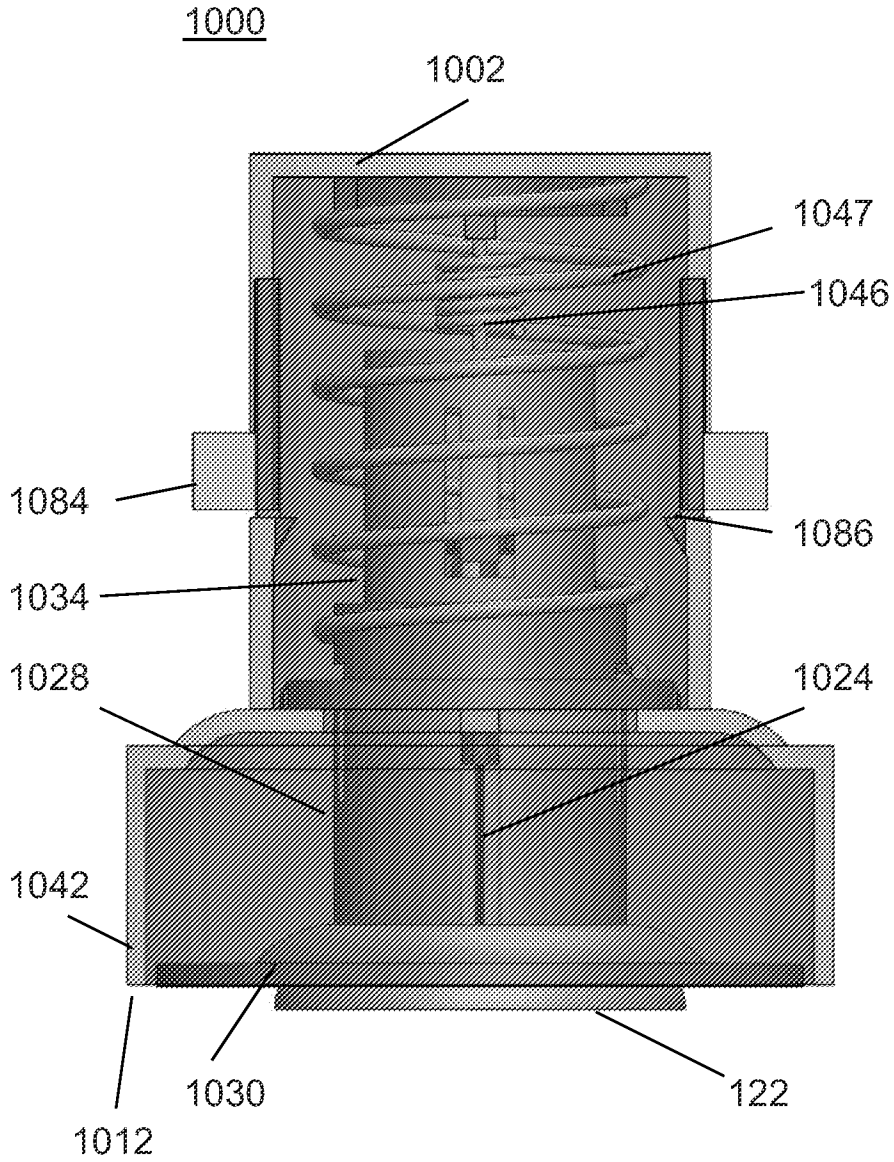

FIGURE 79

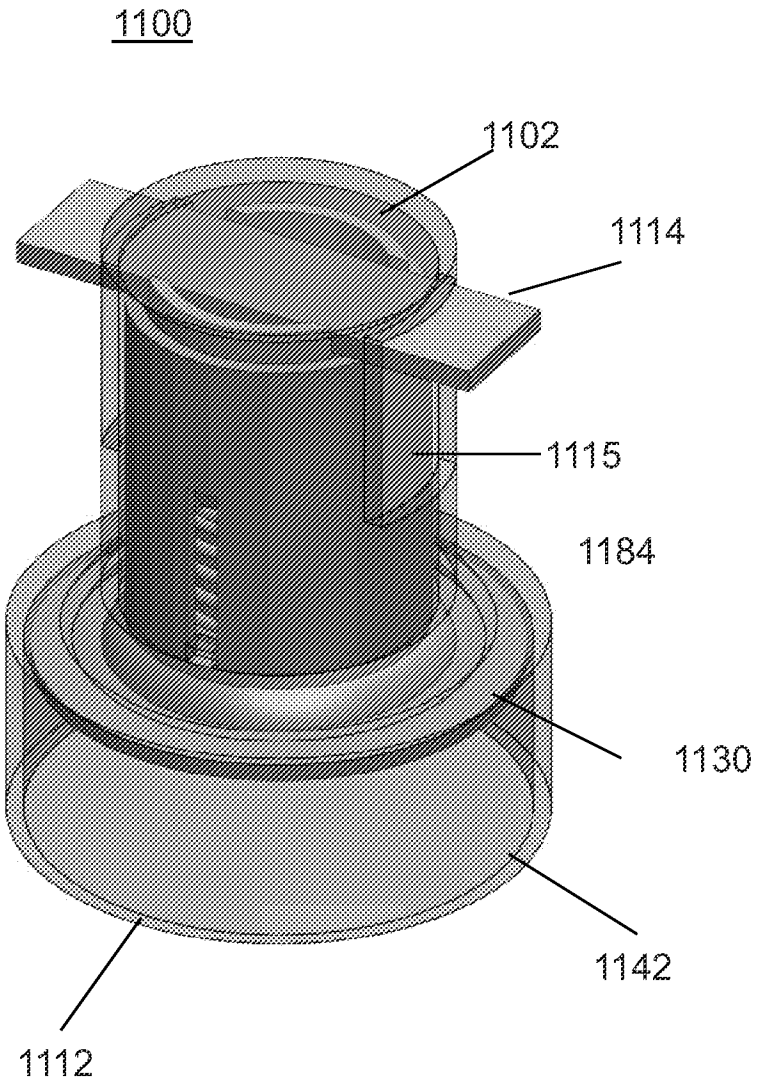

FIGURE 80

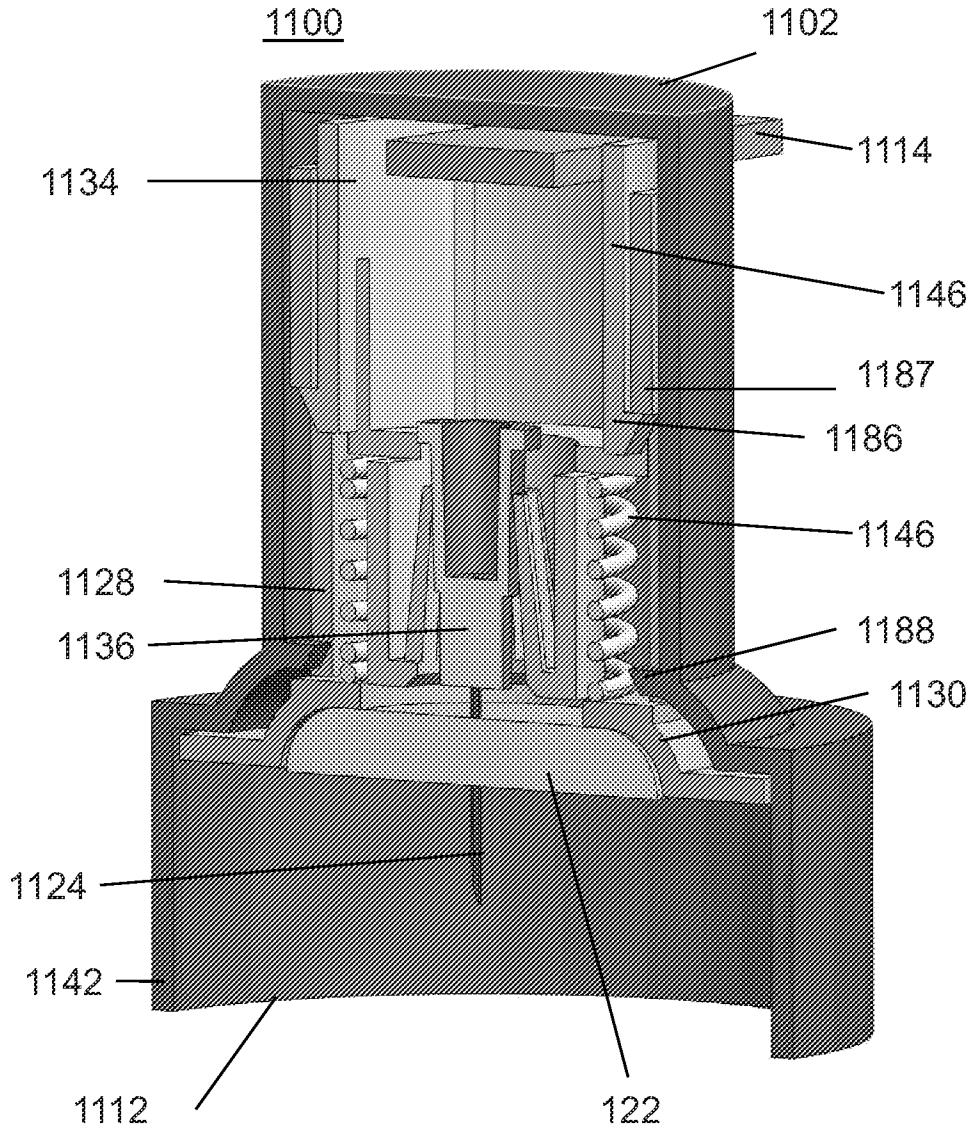

FIGURE 81

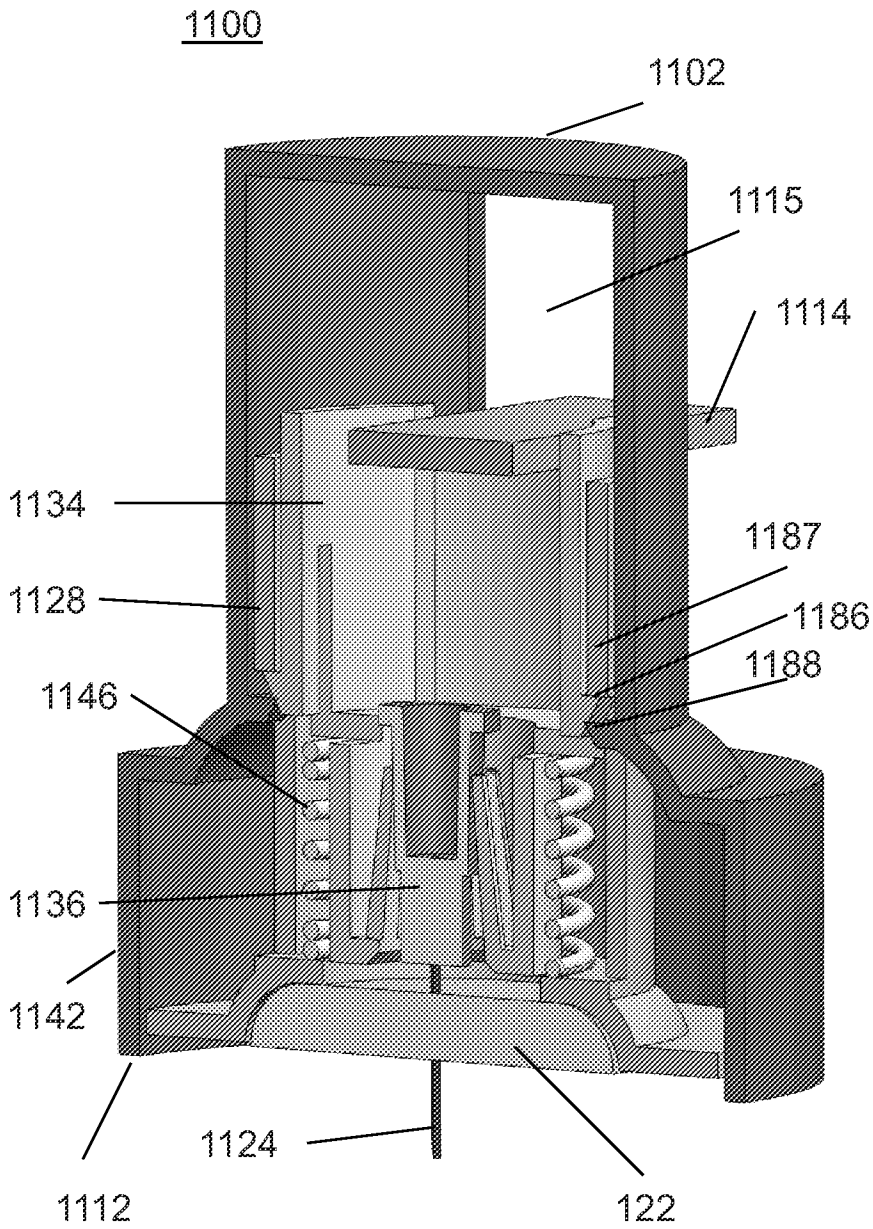

FIGURE 82

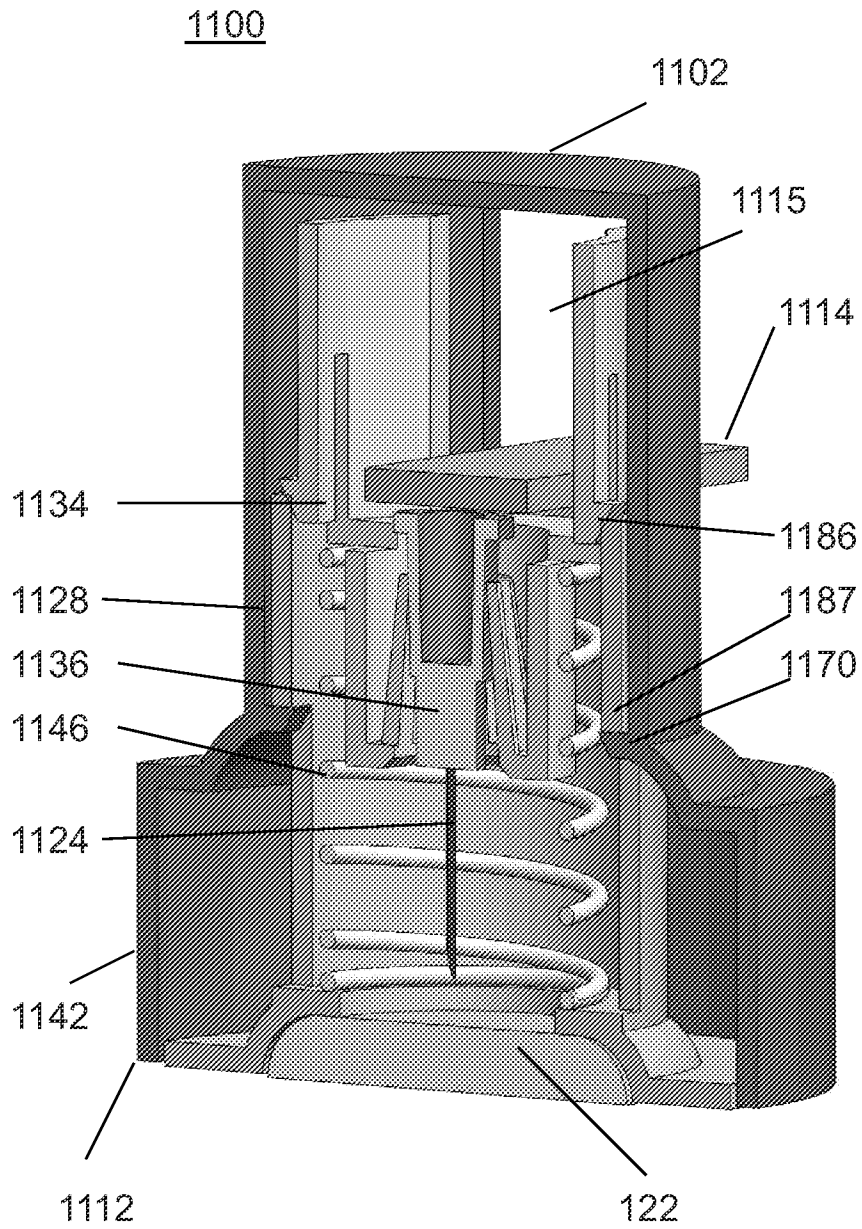

FIGURE 83

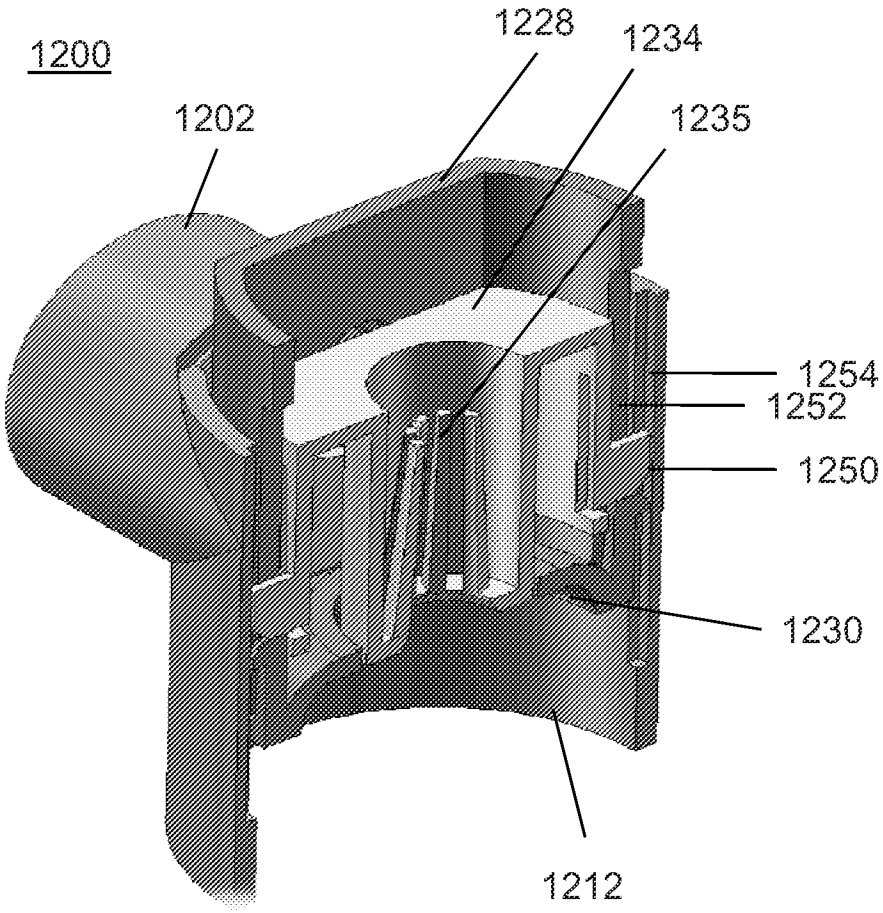

FIGURE 84

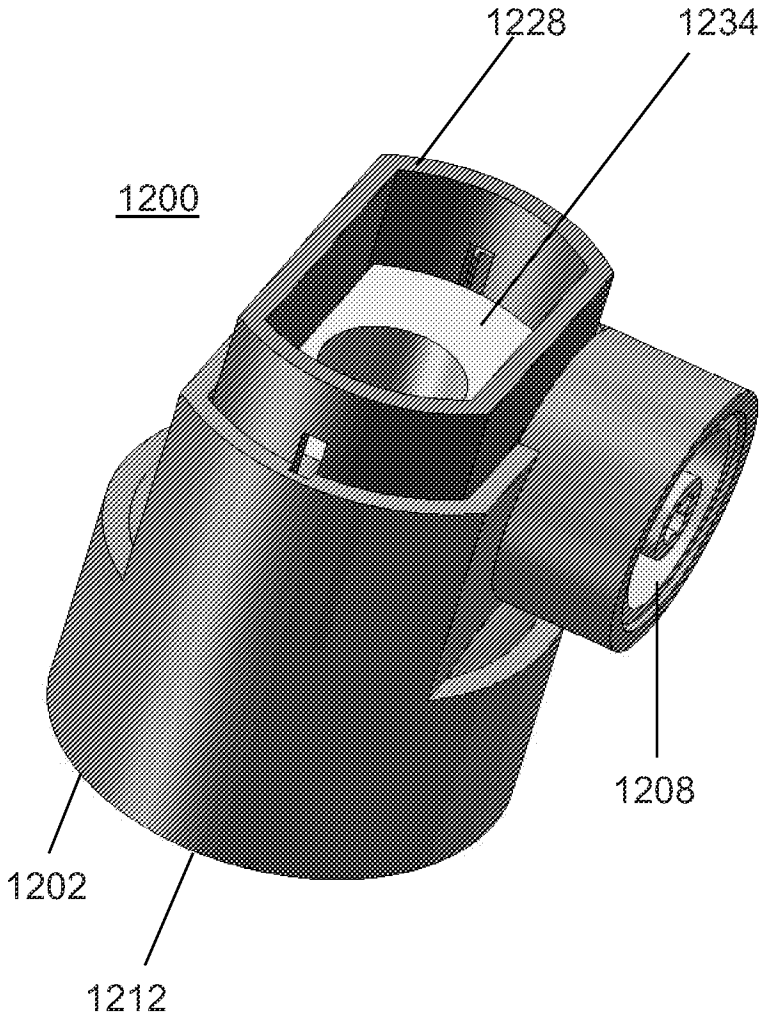

FIGURE 85

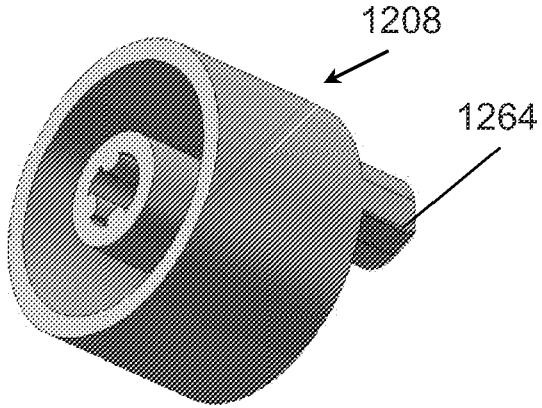

FIGURE 89

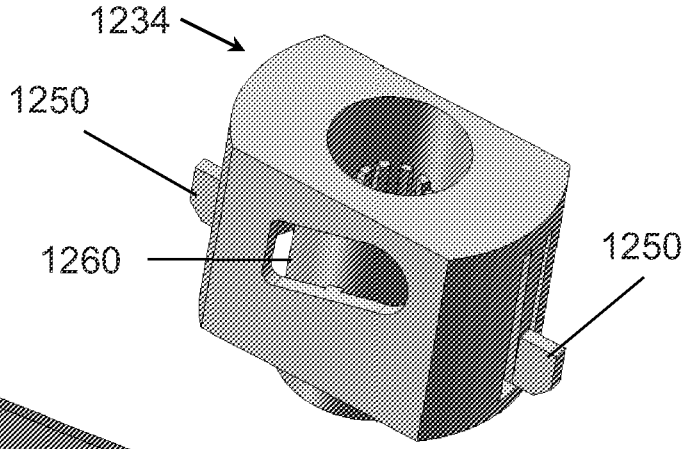

FIGURE 88

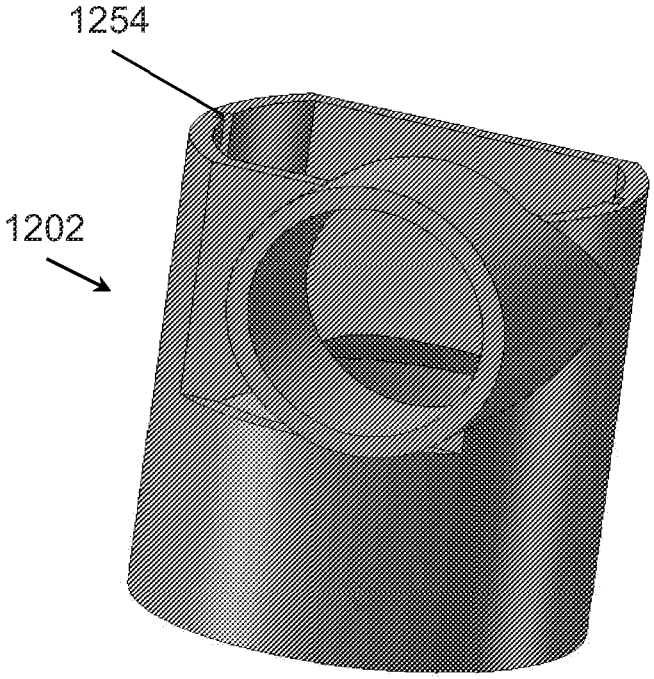

FIGURE 86

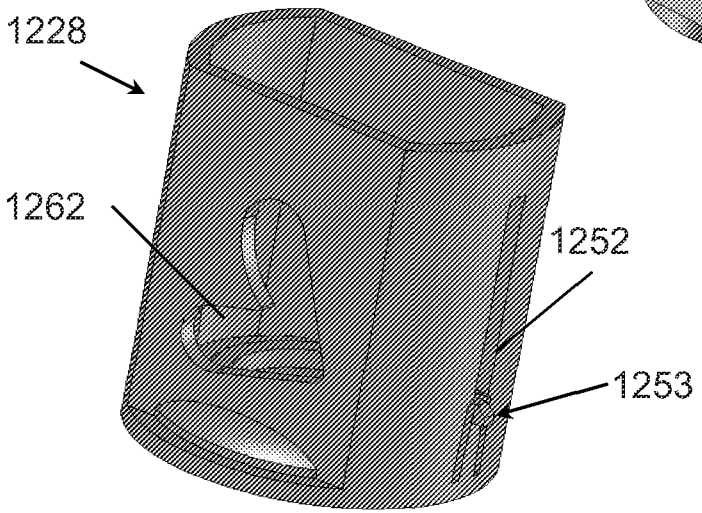

FIGURE 87

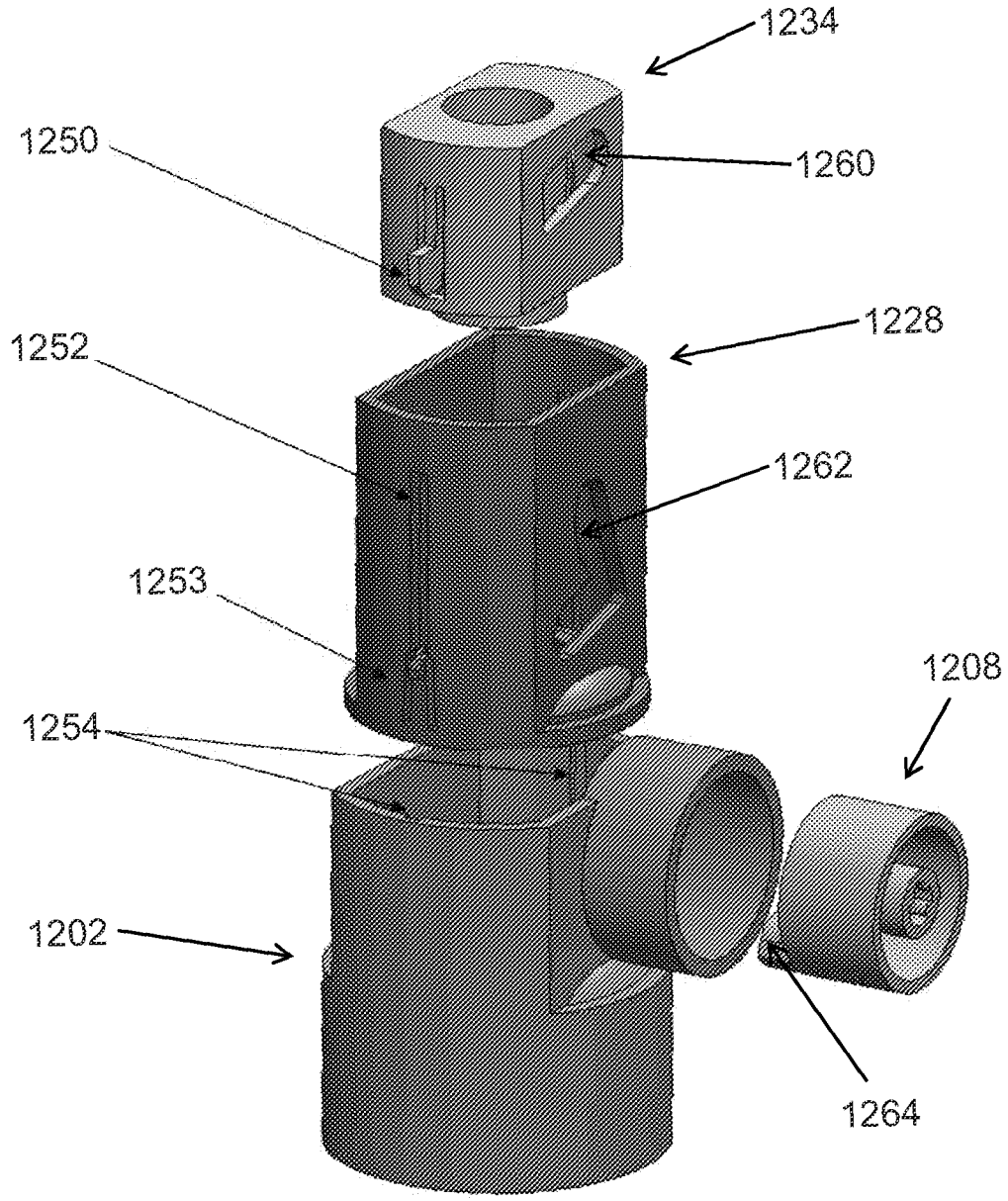

FIGURE 89A

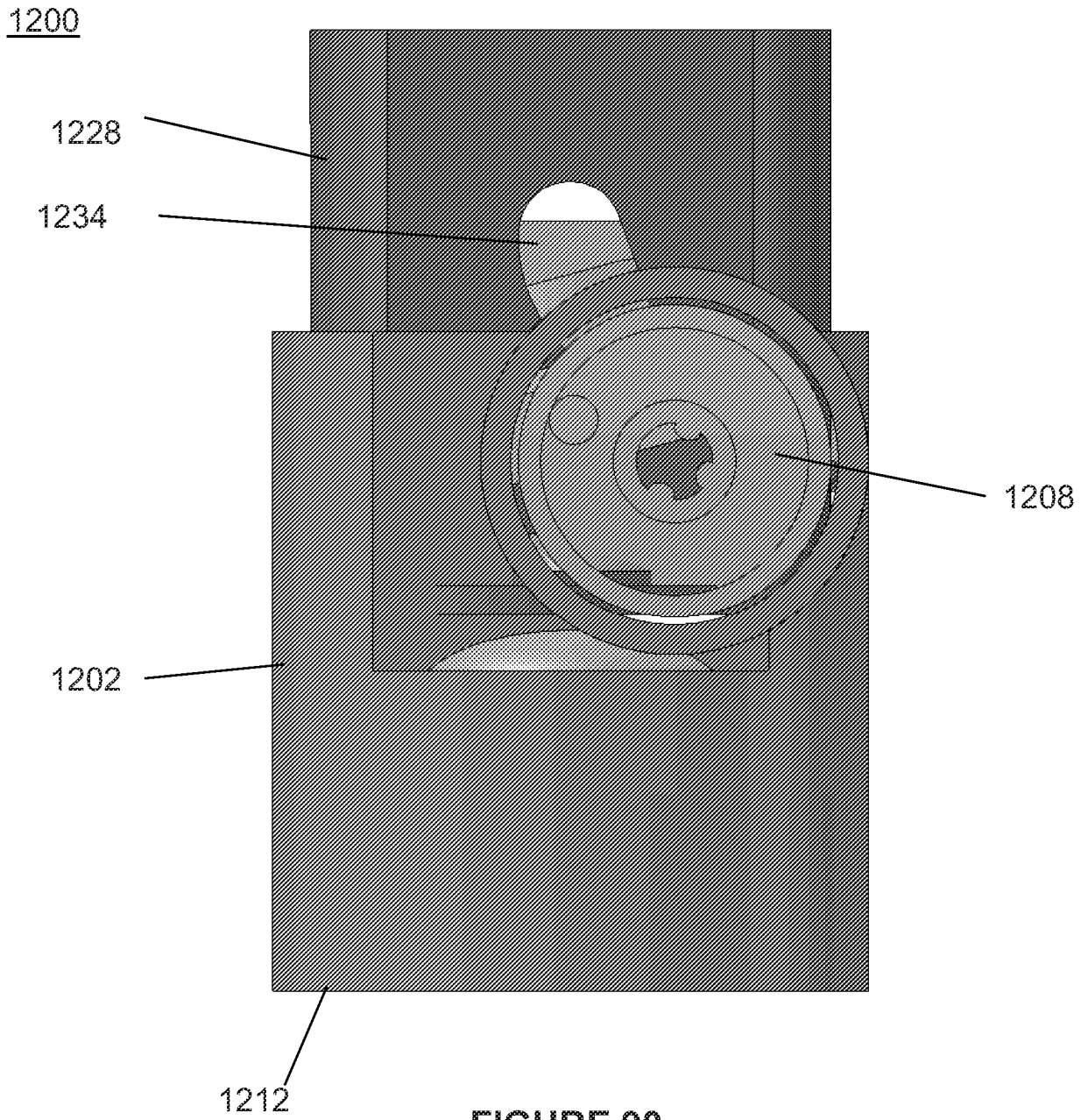

FIGURE 90

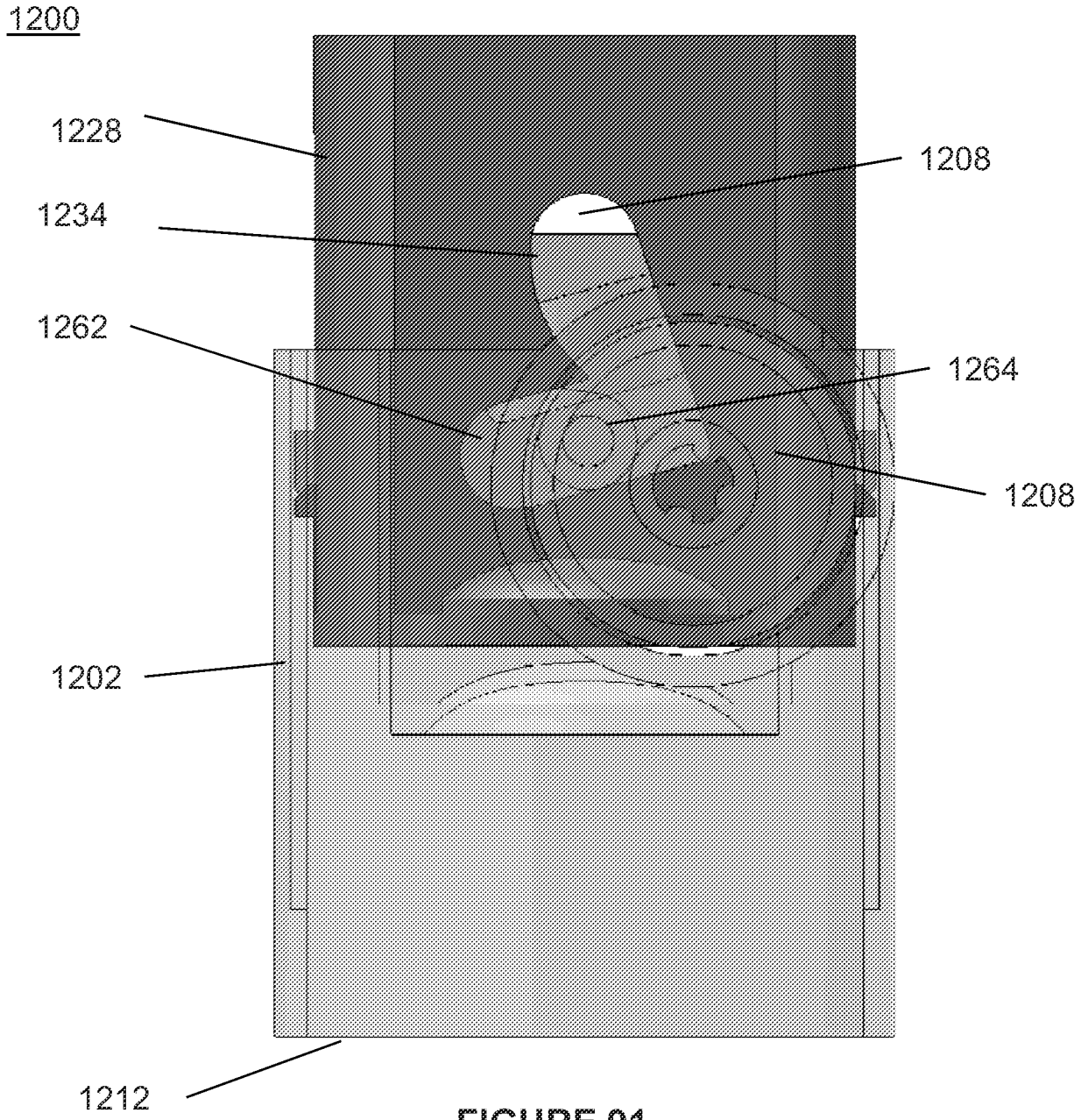

FIGURE 91

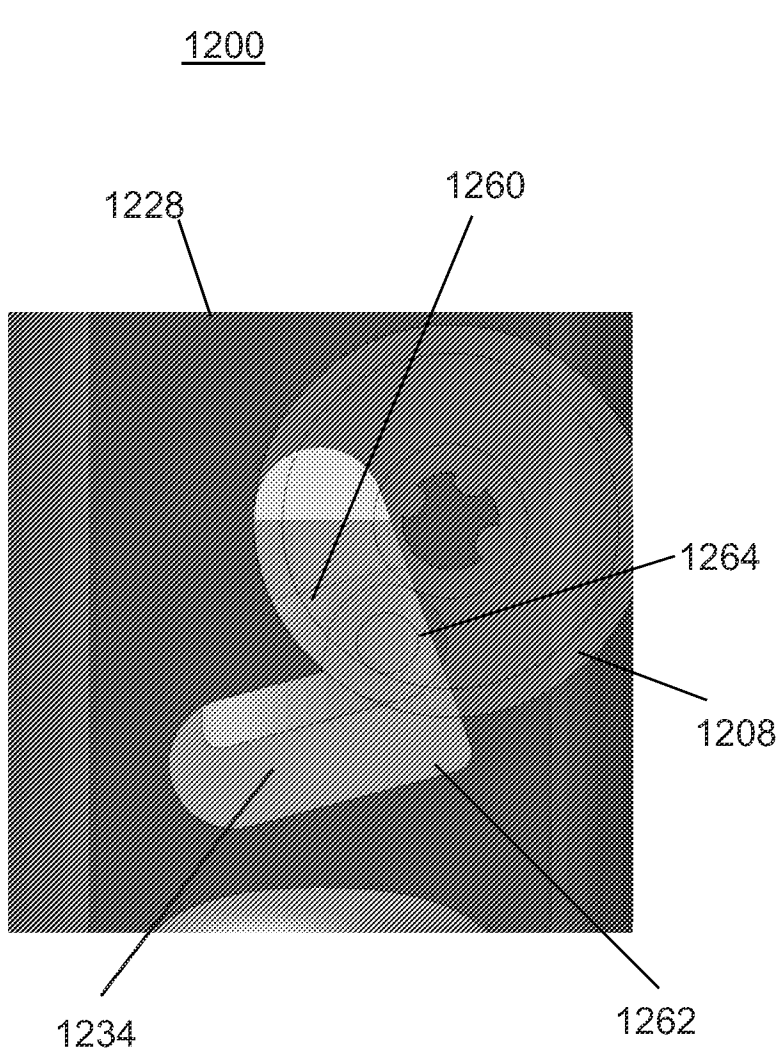

FIGURE 92

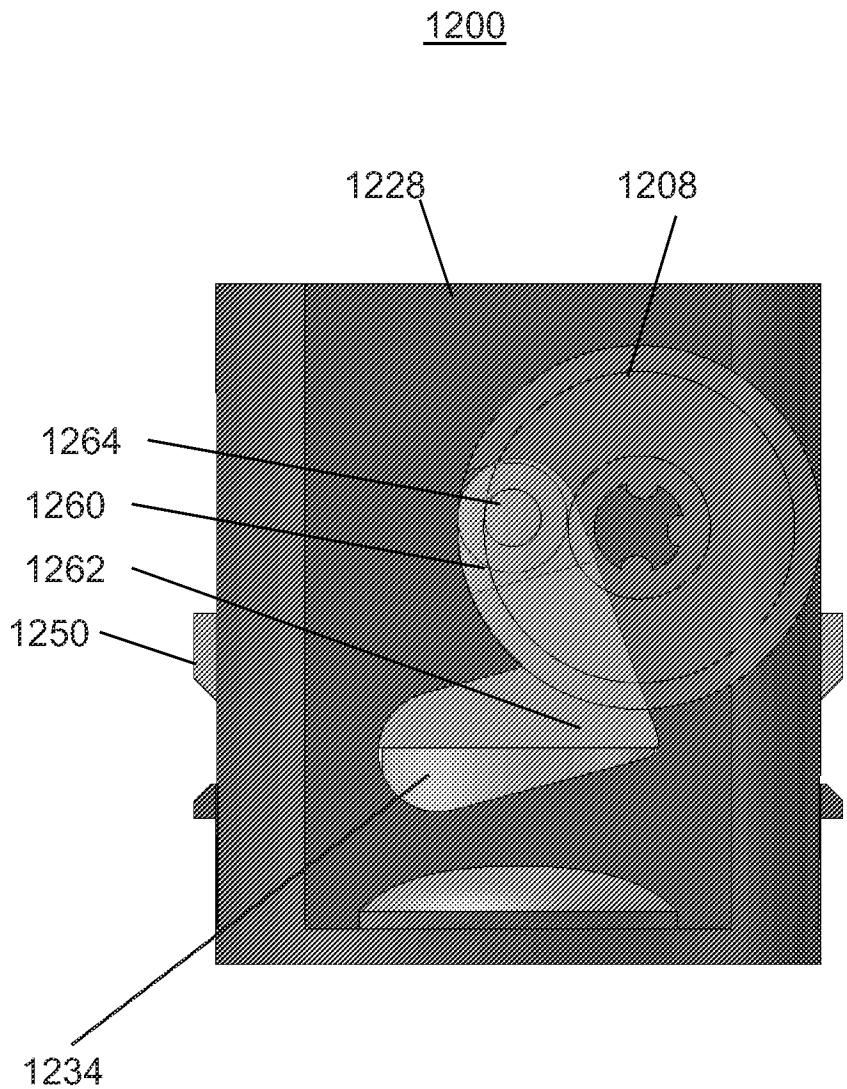

FIGURE 93

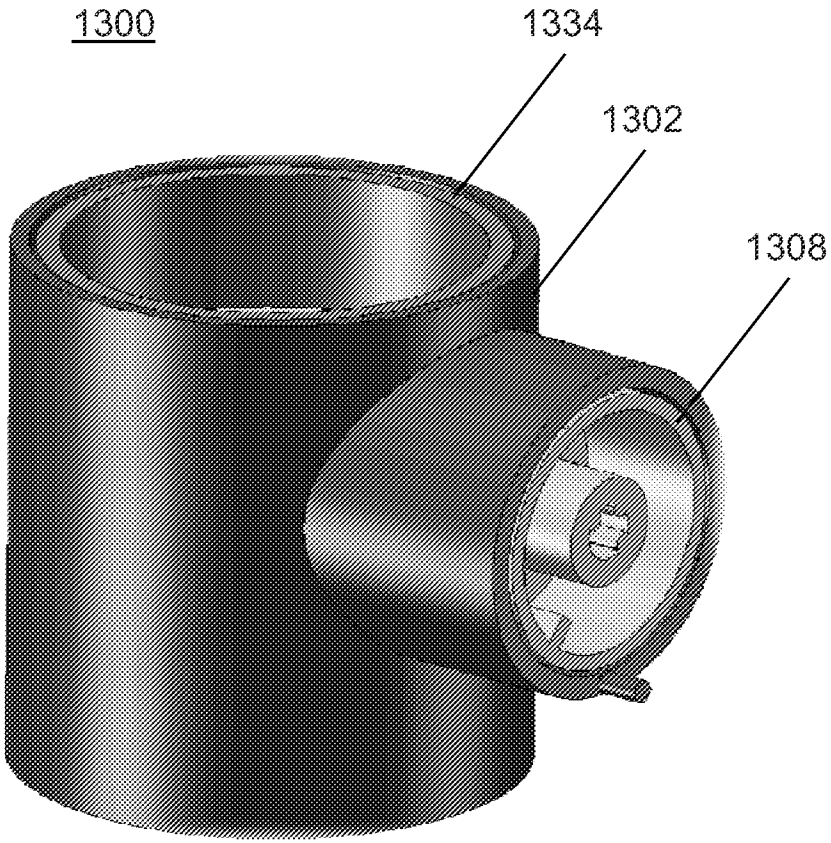

FIGURE 94

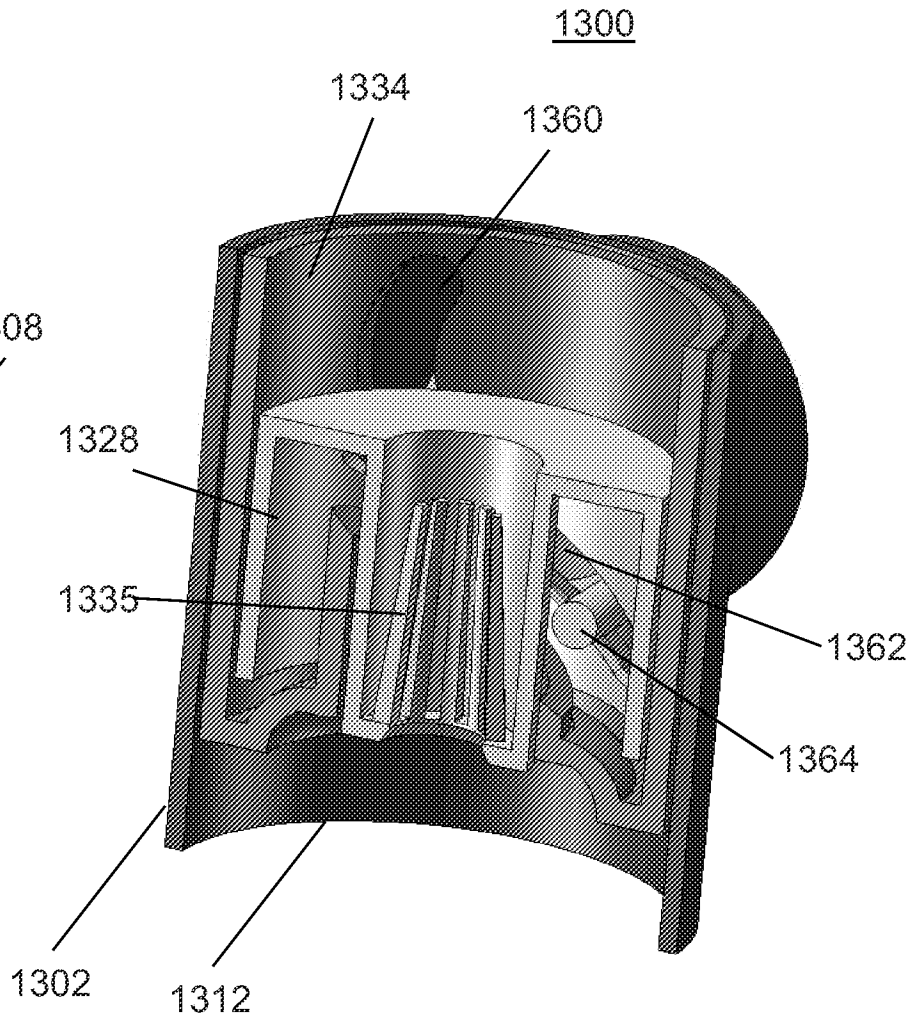

FIGURE 95

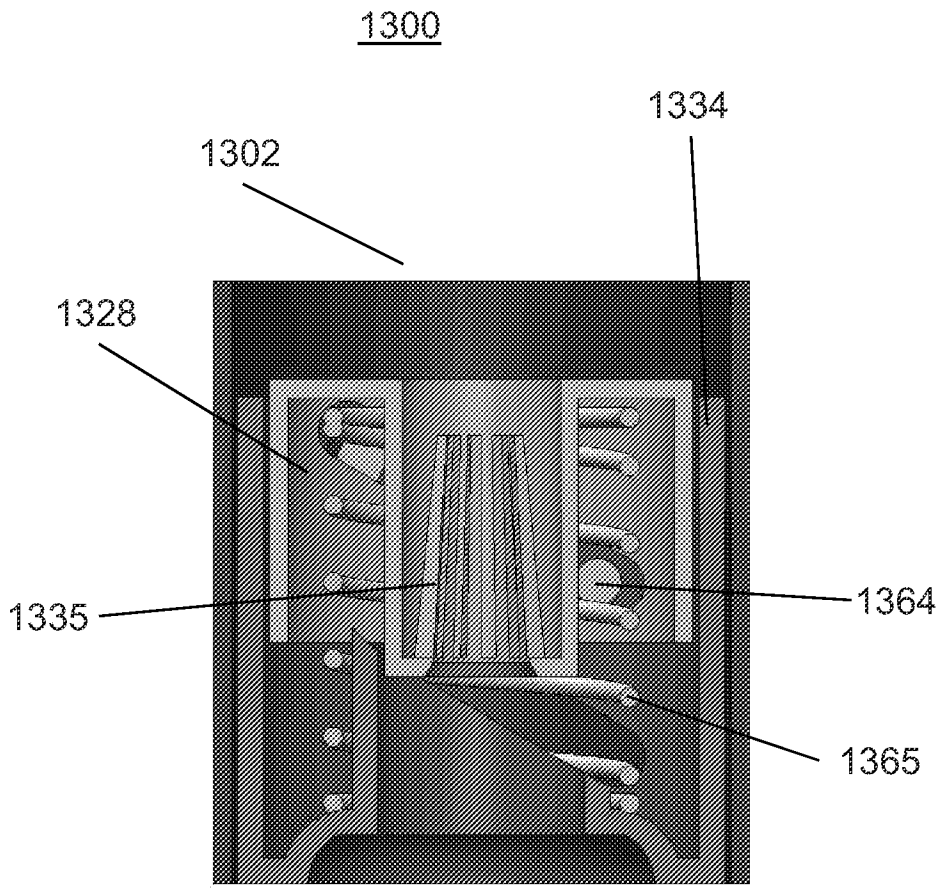

FIGURE 95A

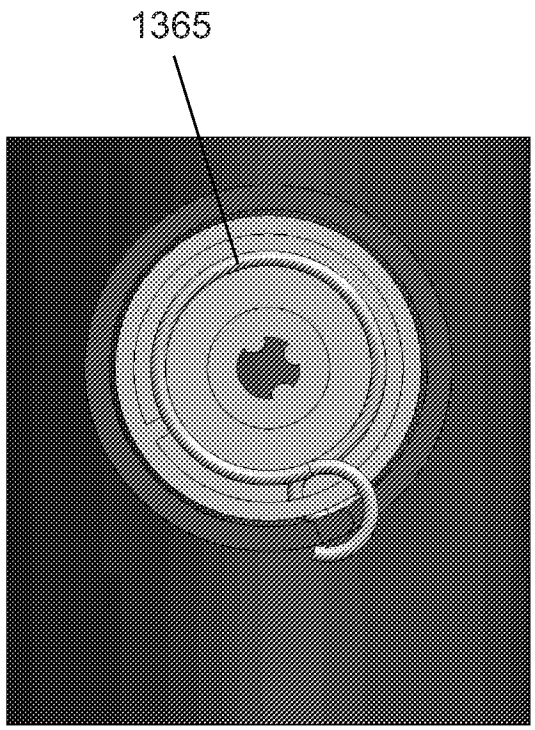

FIGURE 95B

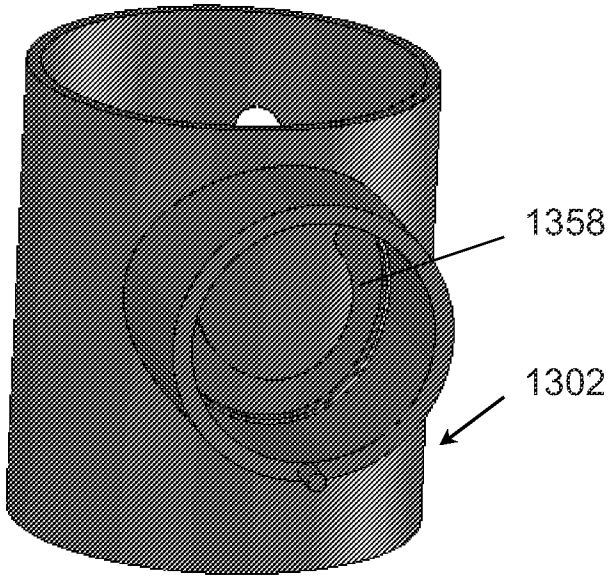

FIGURE 96

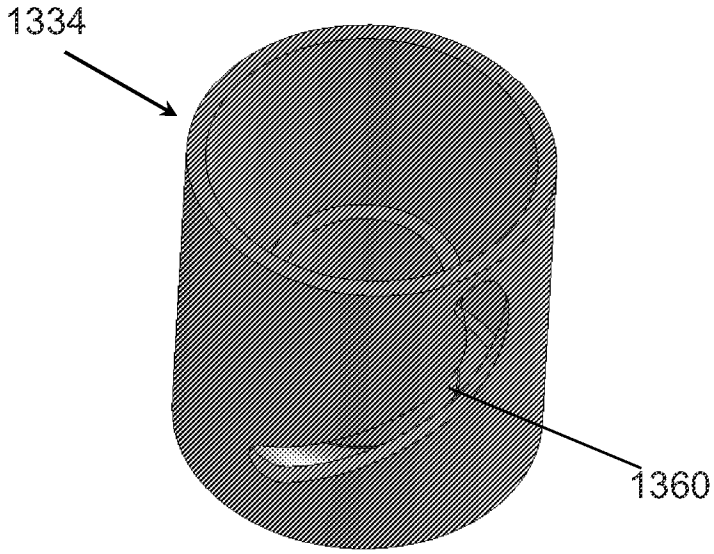

FIGURE 97

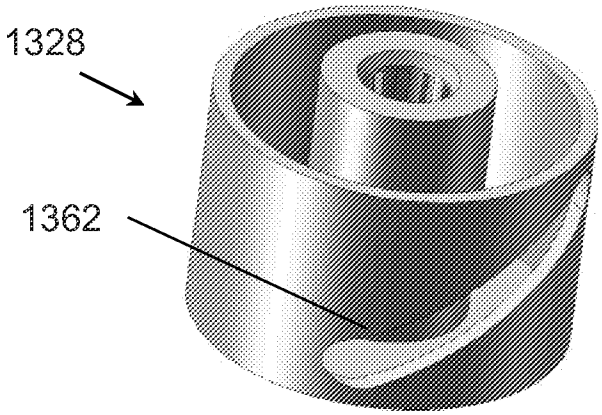

FIGURE 98

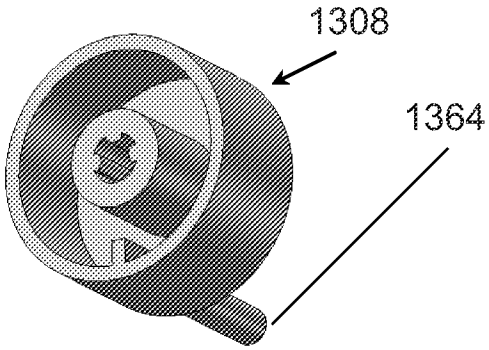

FIGURE 99

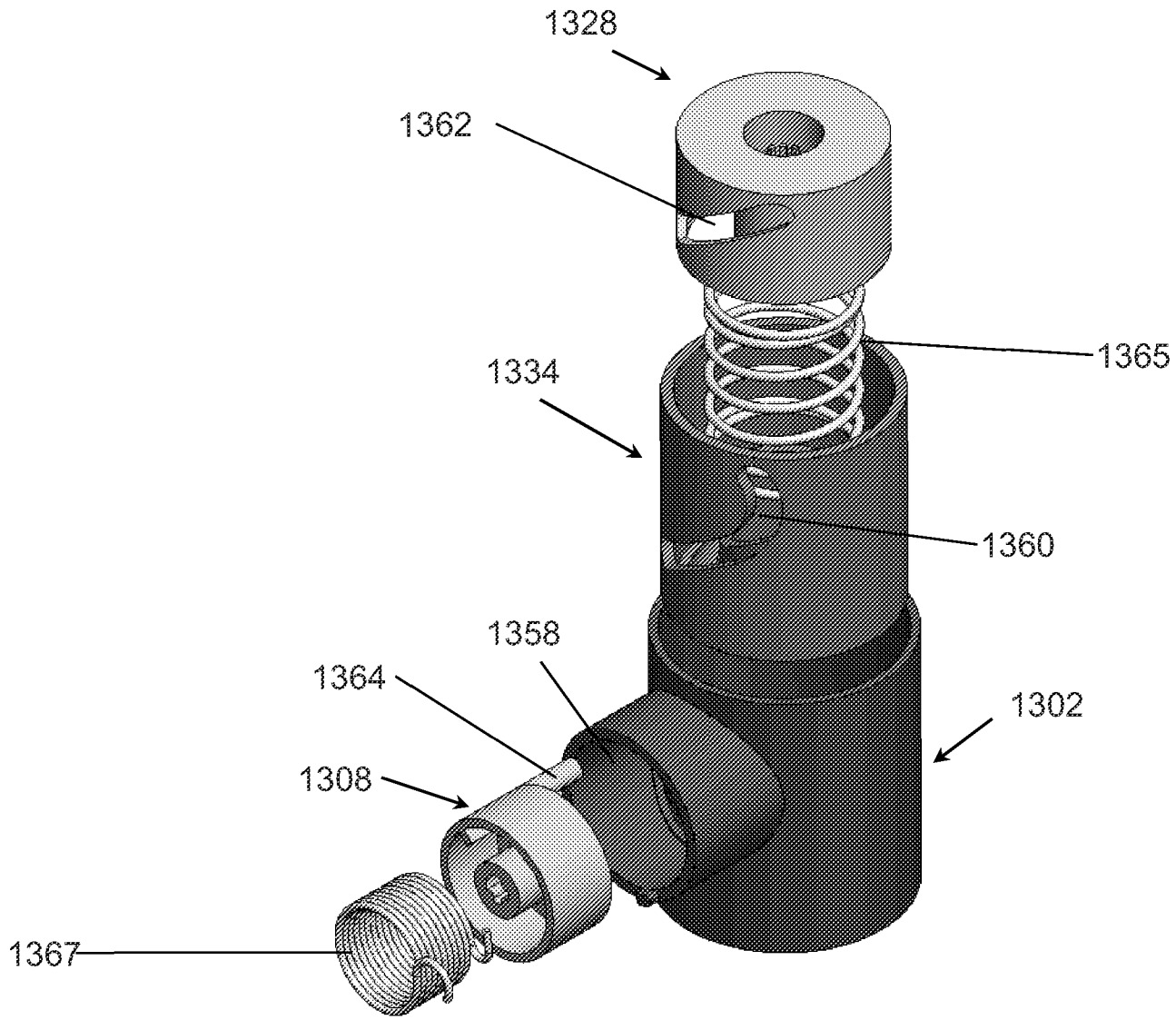

FIGURE 99A

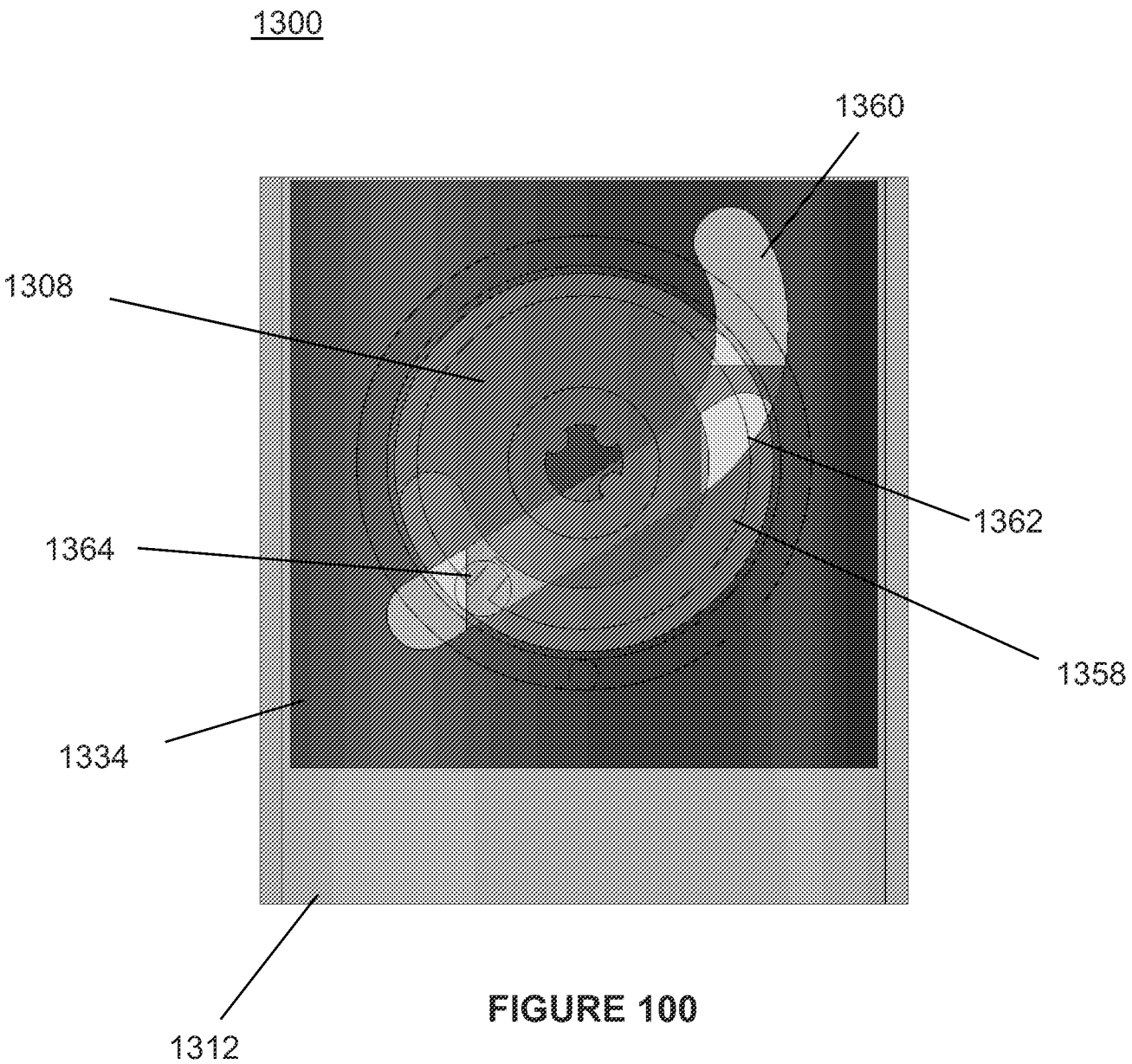

FIGURE 100

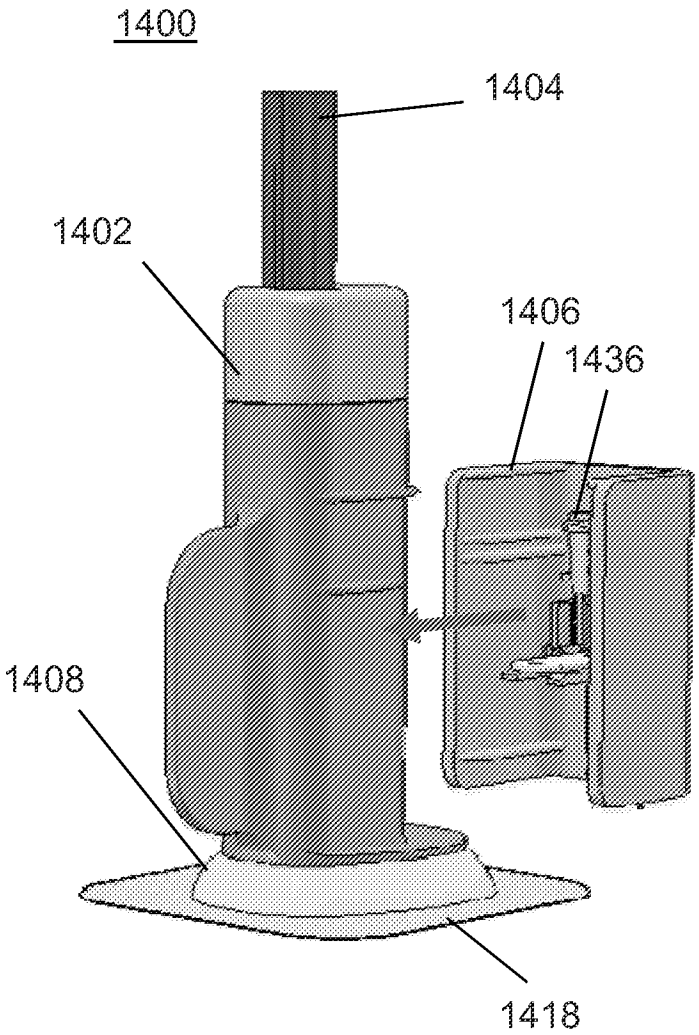

FIGURE 101

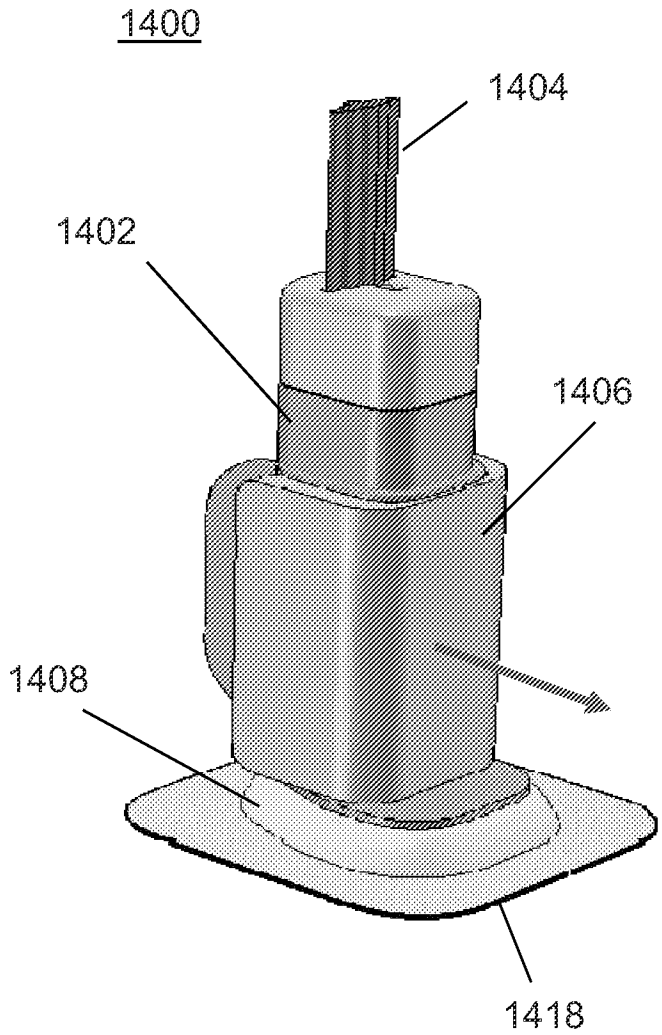

FIGURE 102

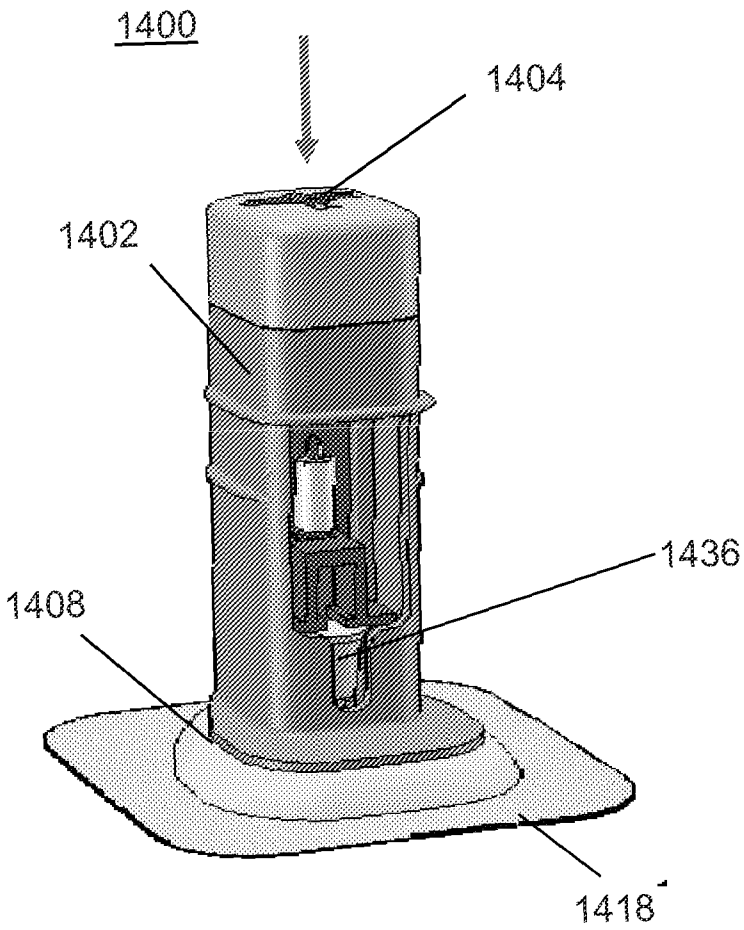

FIGURE 103

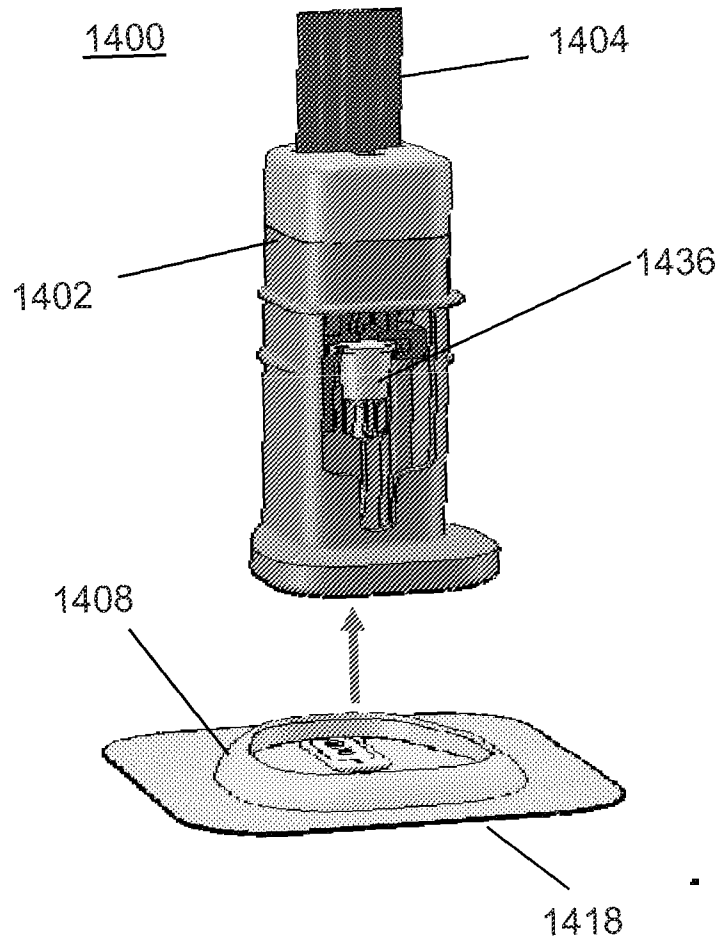

FIGURE 104

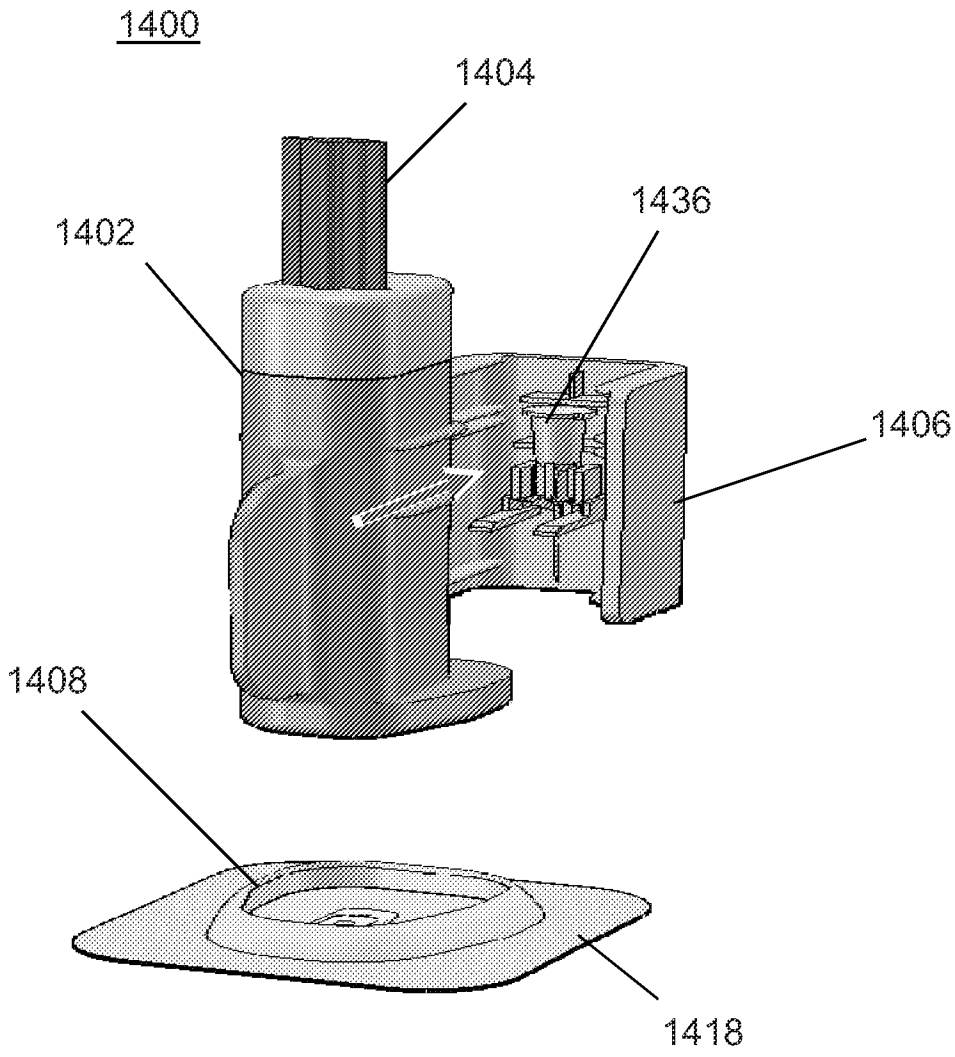

FIGURE 105

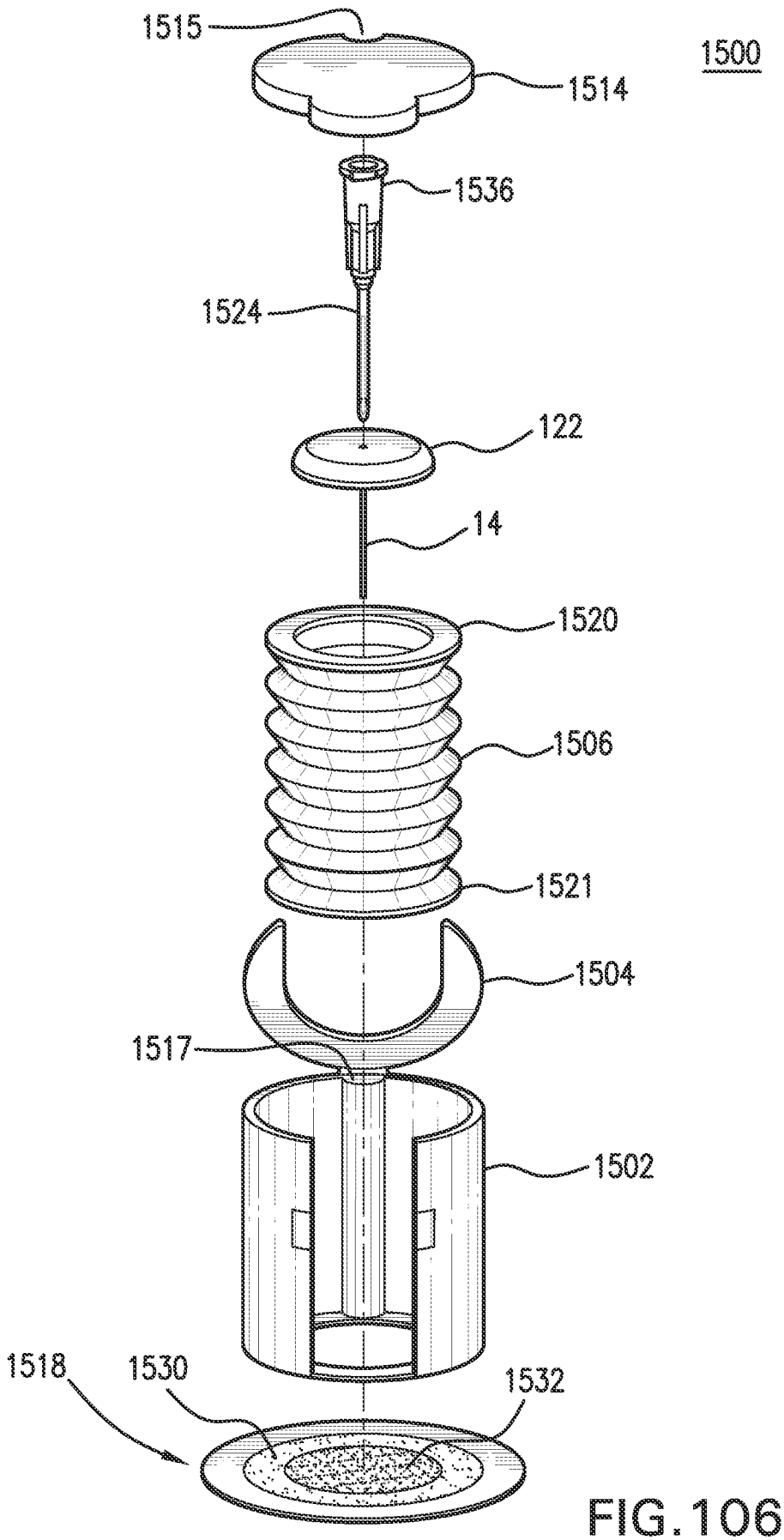
1515
1500
1514
1536
1524
122
14
1520
1506
1521
1504
1517
1502
1518
1530
1532

FIG. 106

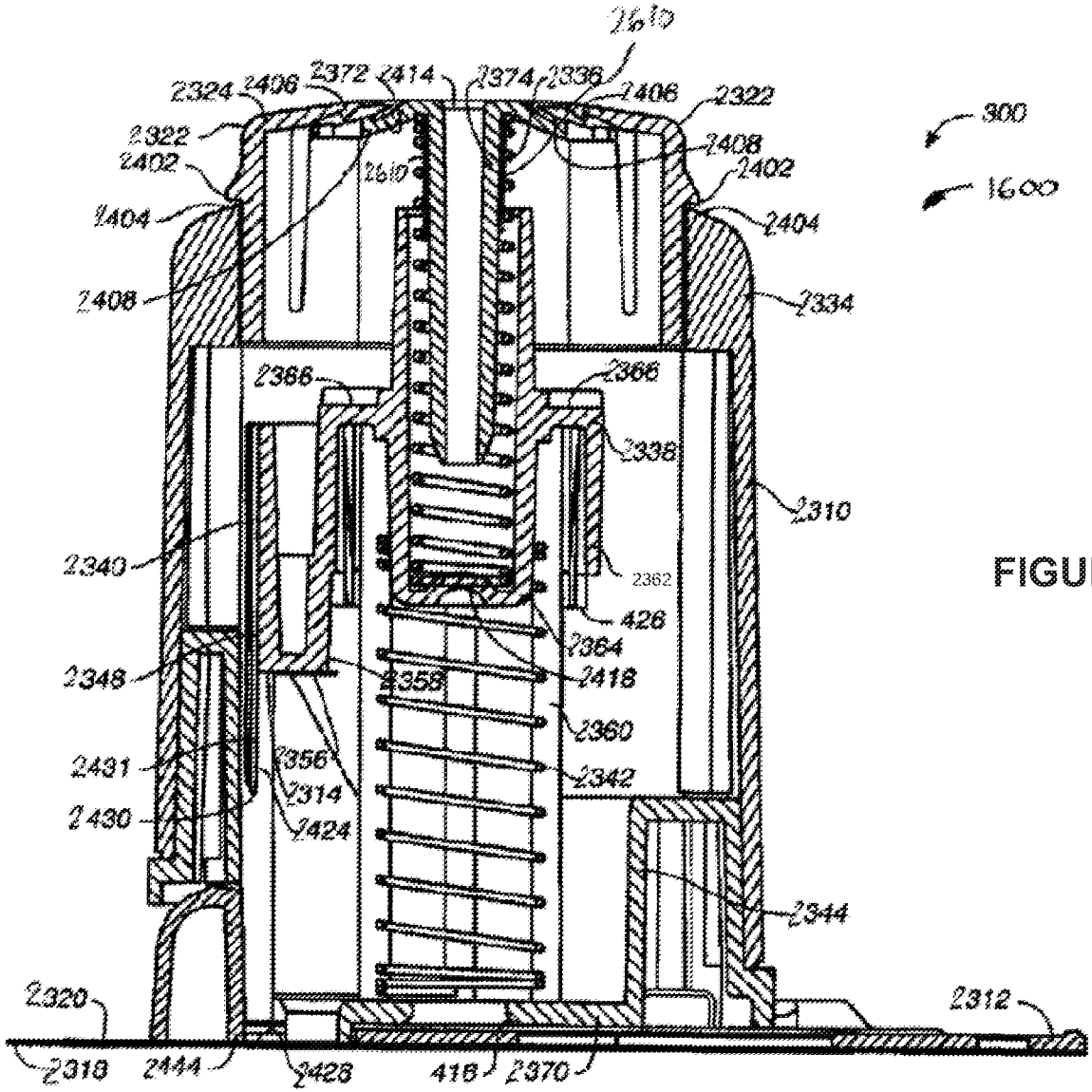
2610
2324
2406
2372
2414
2374
2336
2406
2322
300
2322
2408
2402
2610
2402
1600
2404
2404
2408
2334
2366
2366
2338
2310
2340
2362
426
2364
2348
2358
2418
2360
2431
2356
2342
2314
2430
2424
2344
2320
2312
2318
2444
2428
416
2370

FIGURE 107

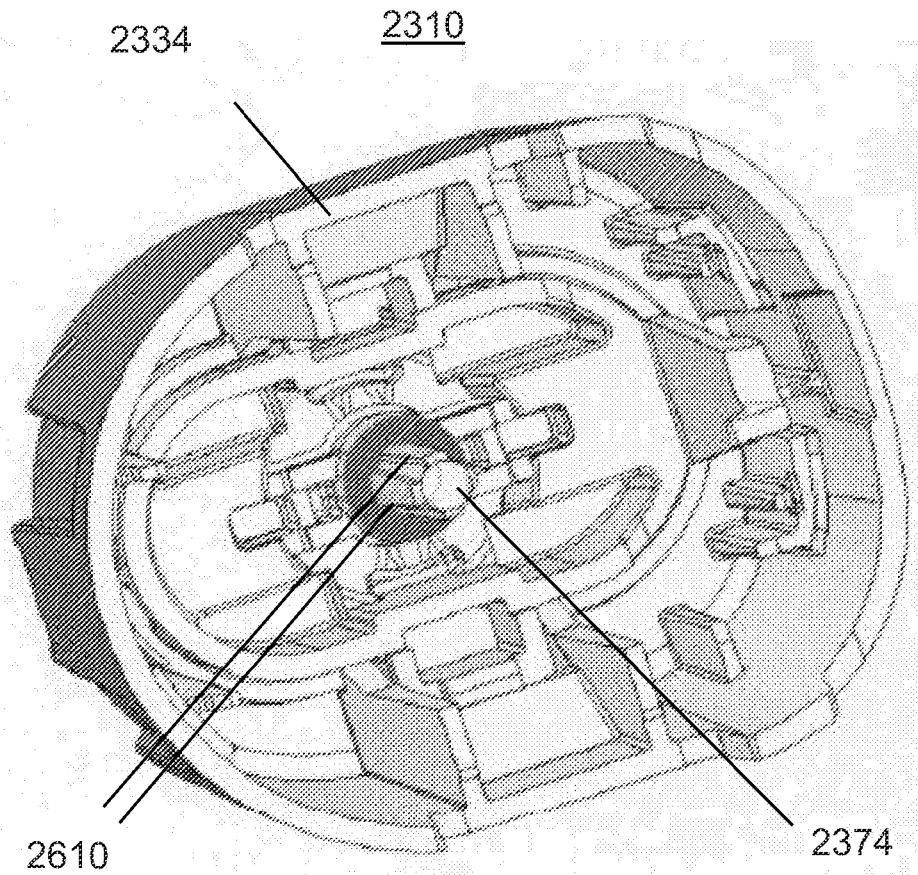

FIGURE 108

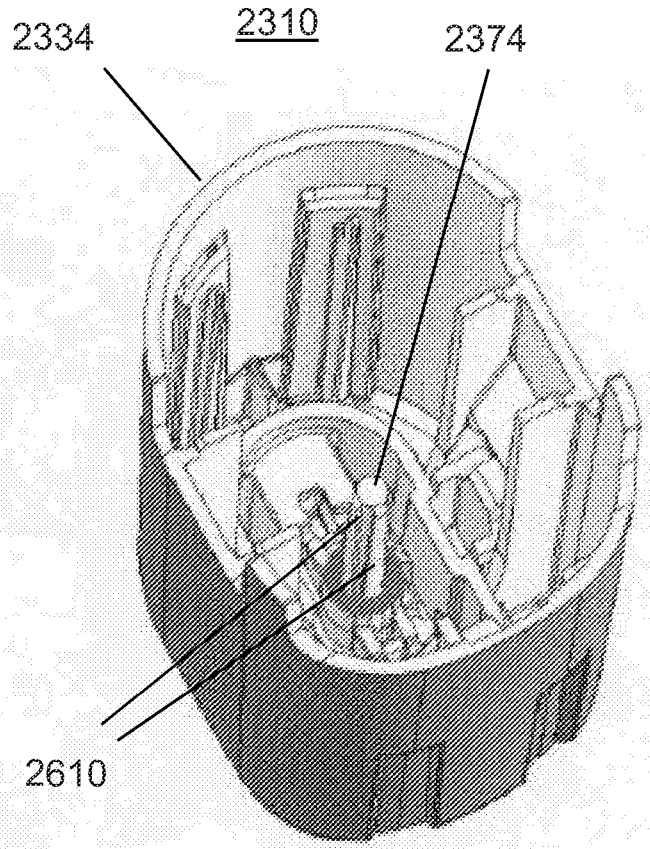

FIGURE 109

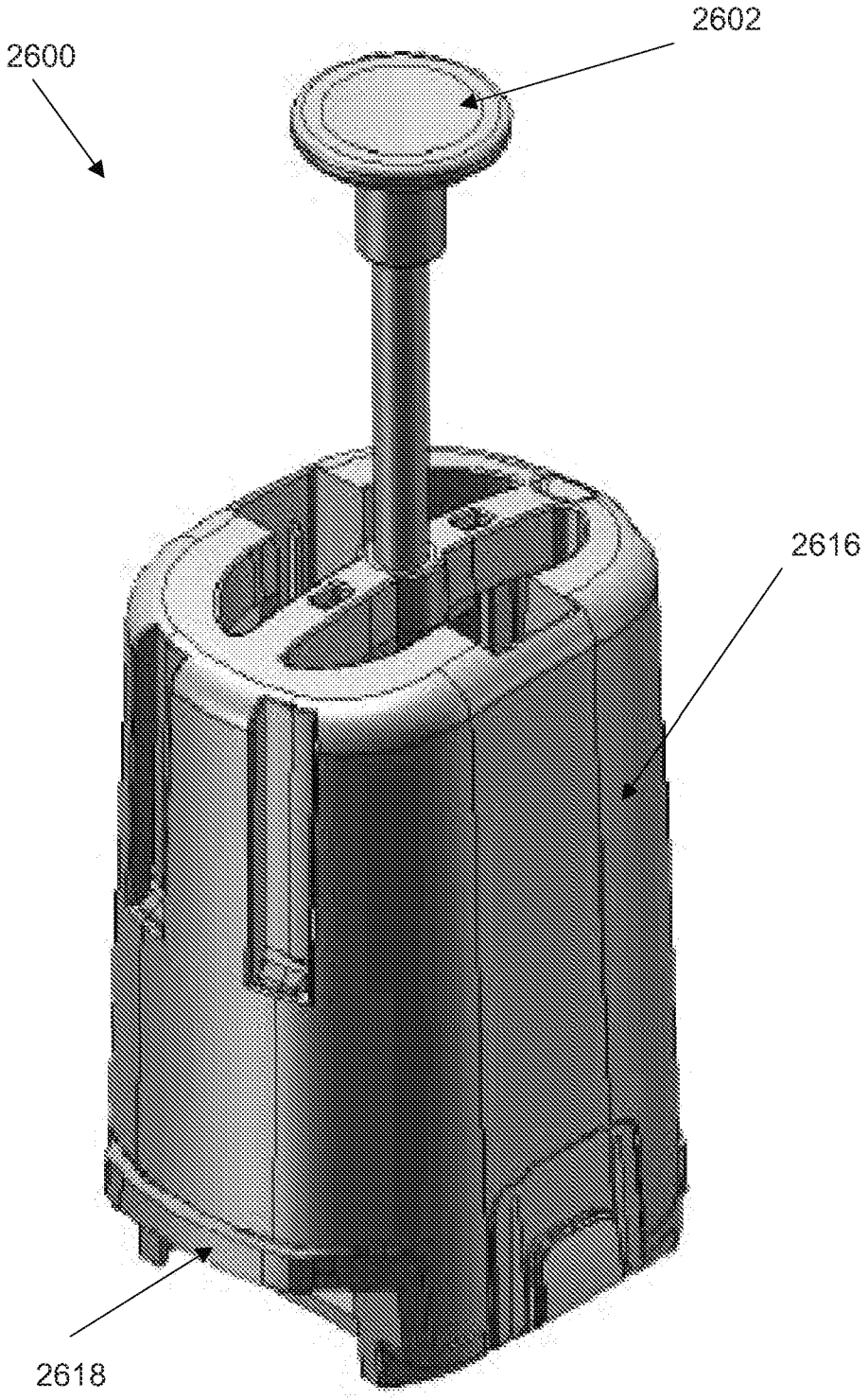

FIG. 110

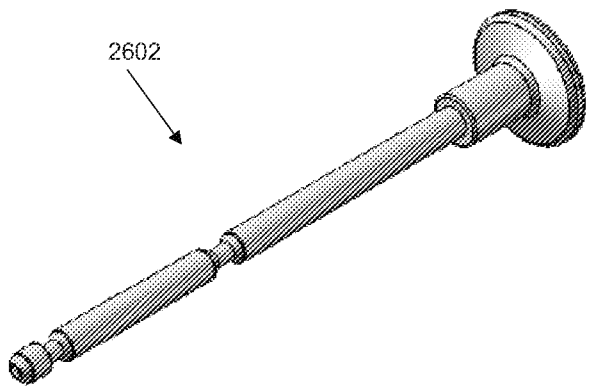

FIG. 110A

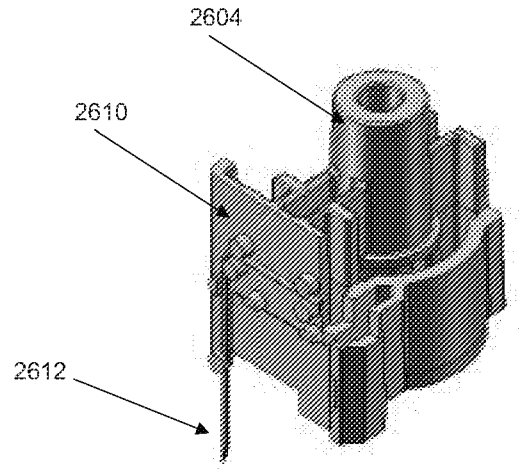

FIG. 110B

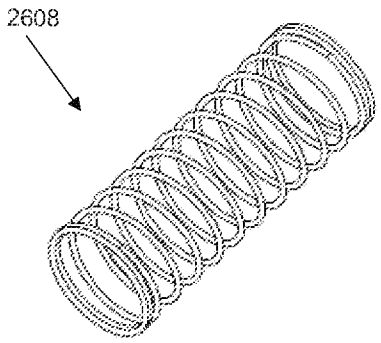

FIG. 110C

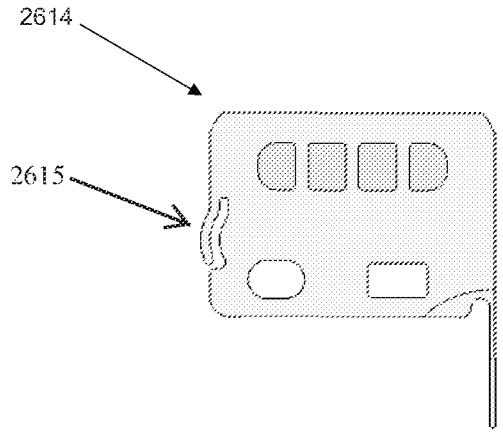

FIG. 110D

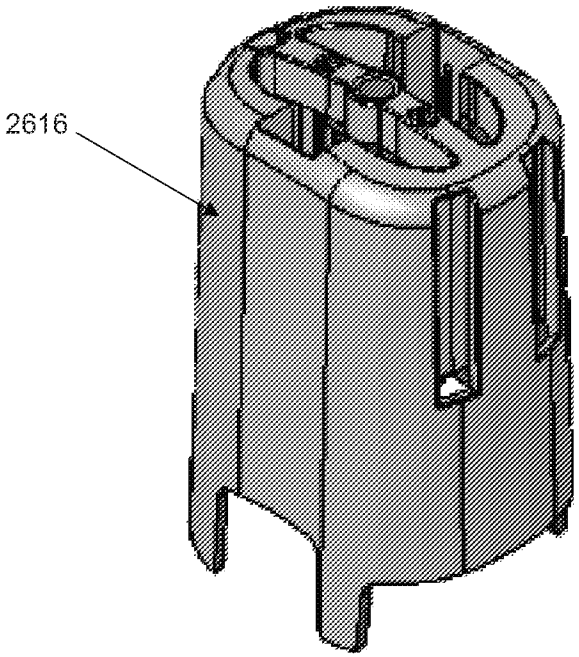

FIG. 110E

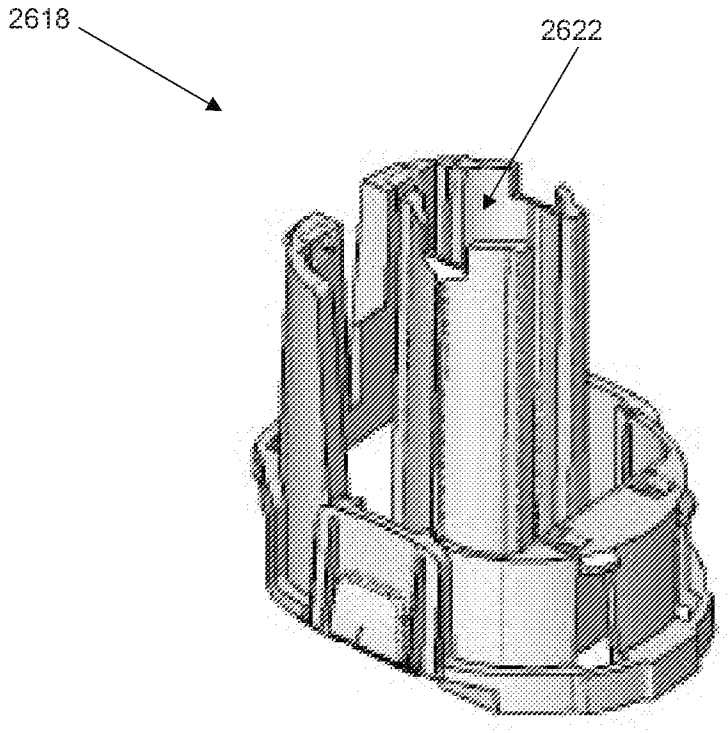

FIG. 110F

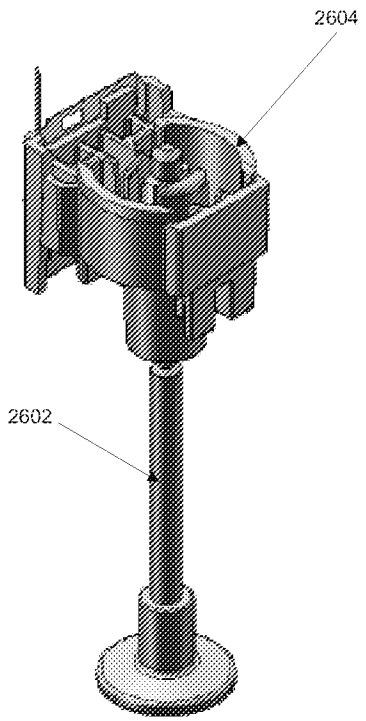

FIG. 111A

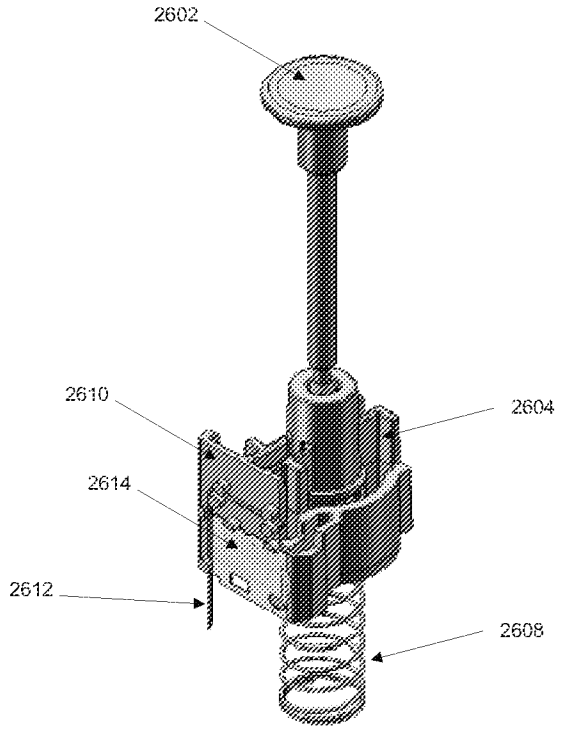

FIG. 111B

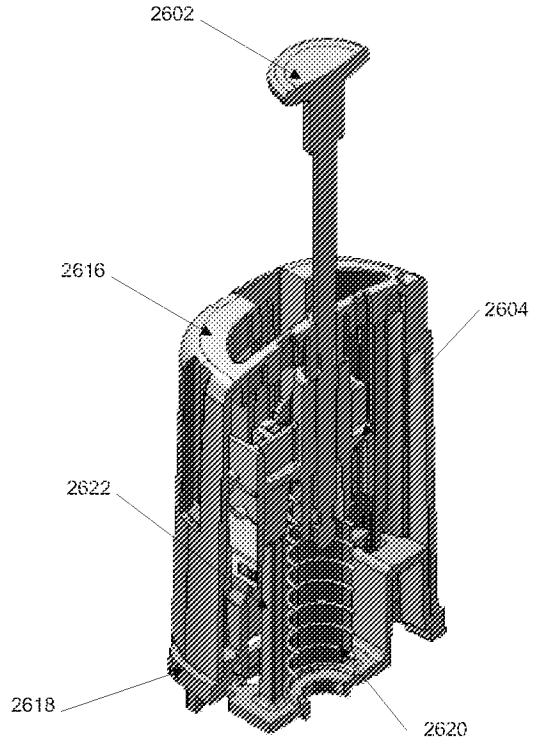

FIG. 111C

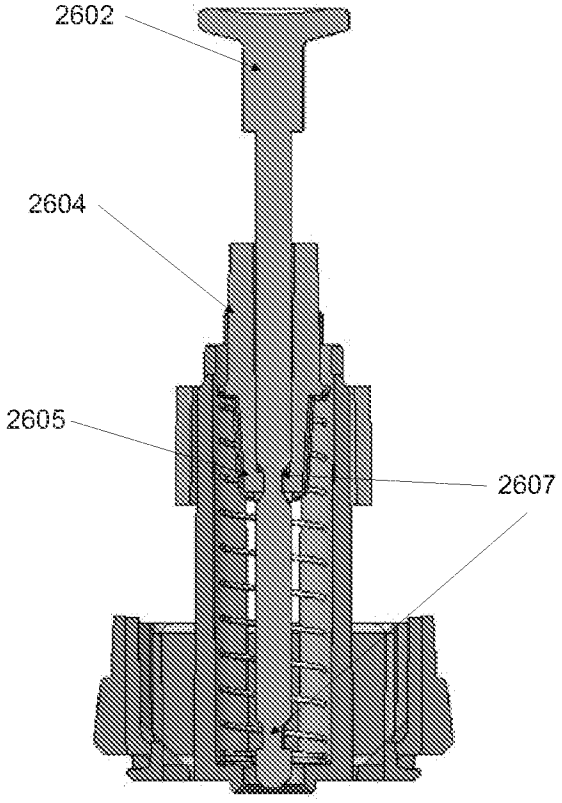

FIG. 111D

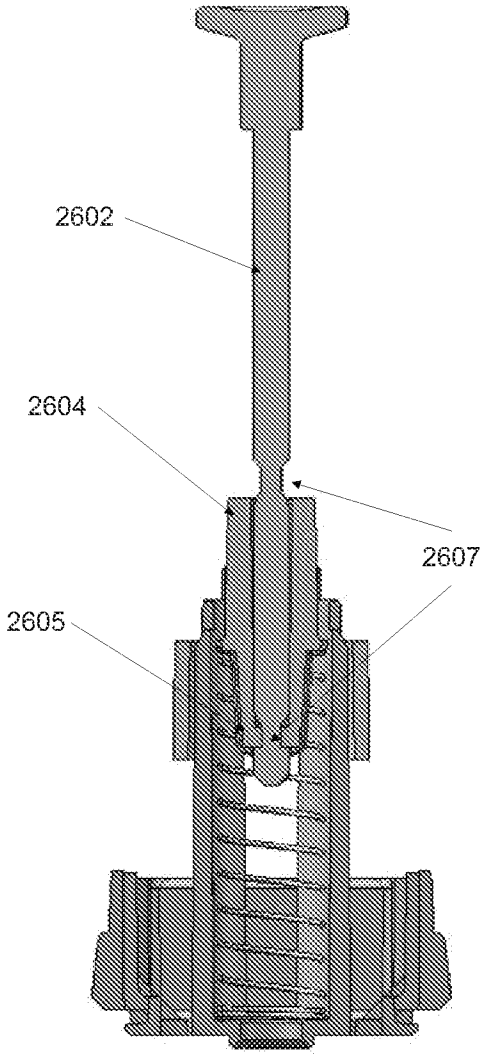

FIG. 111E

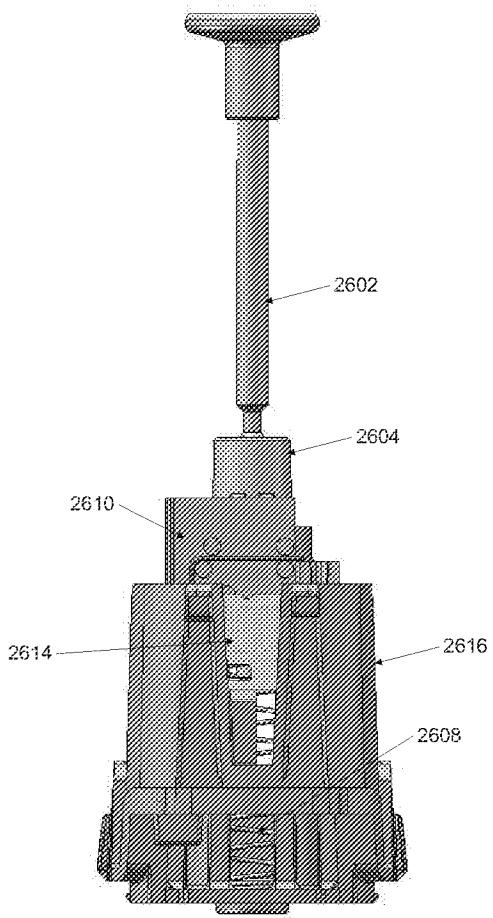

FIG. 112A

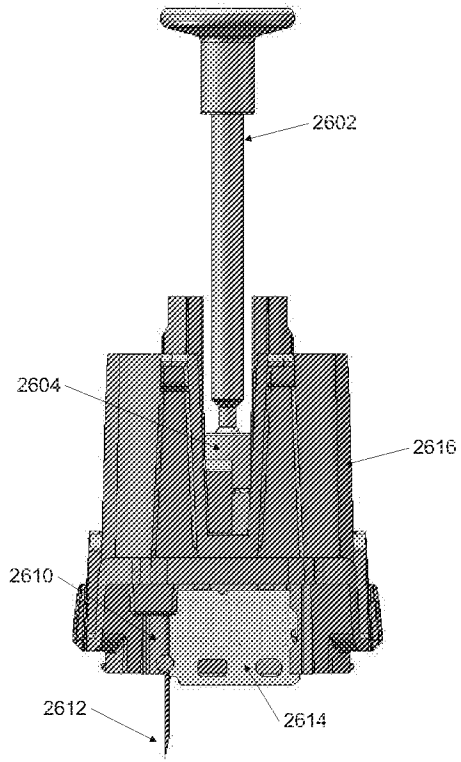

FIG. 112B

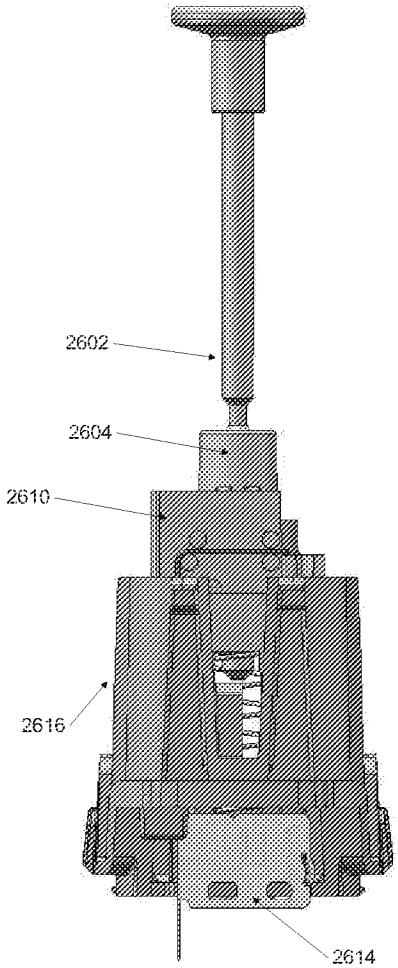

FIG. 112C

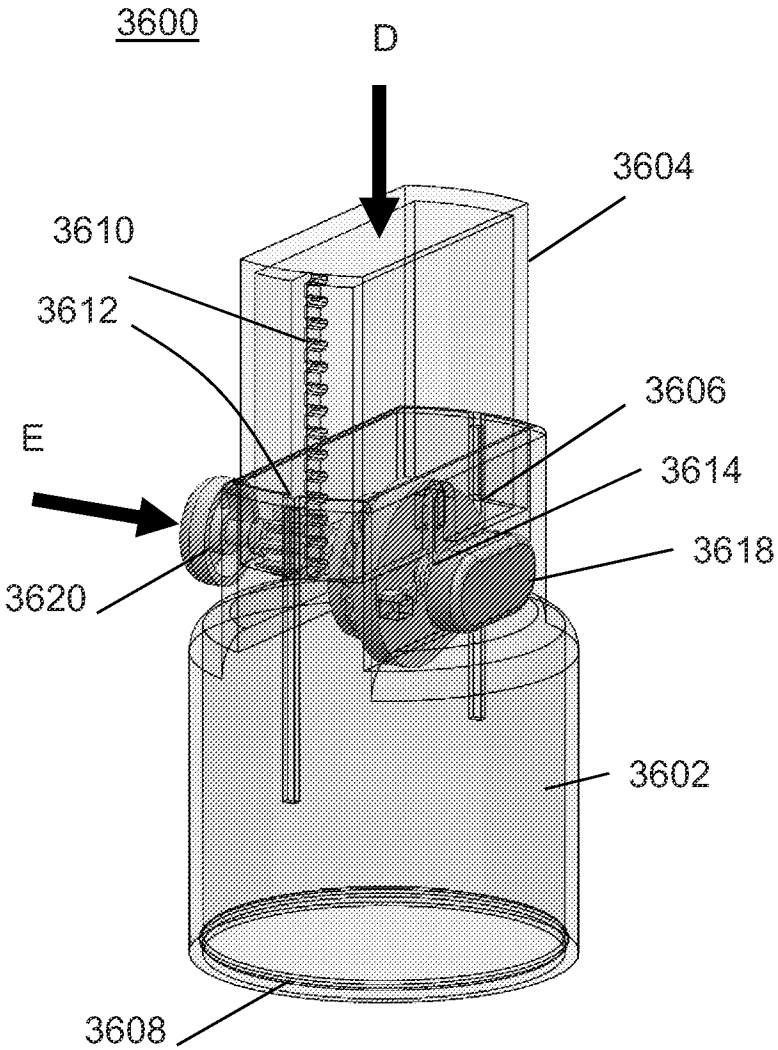

FIGURE 113

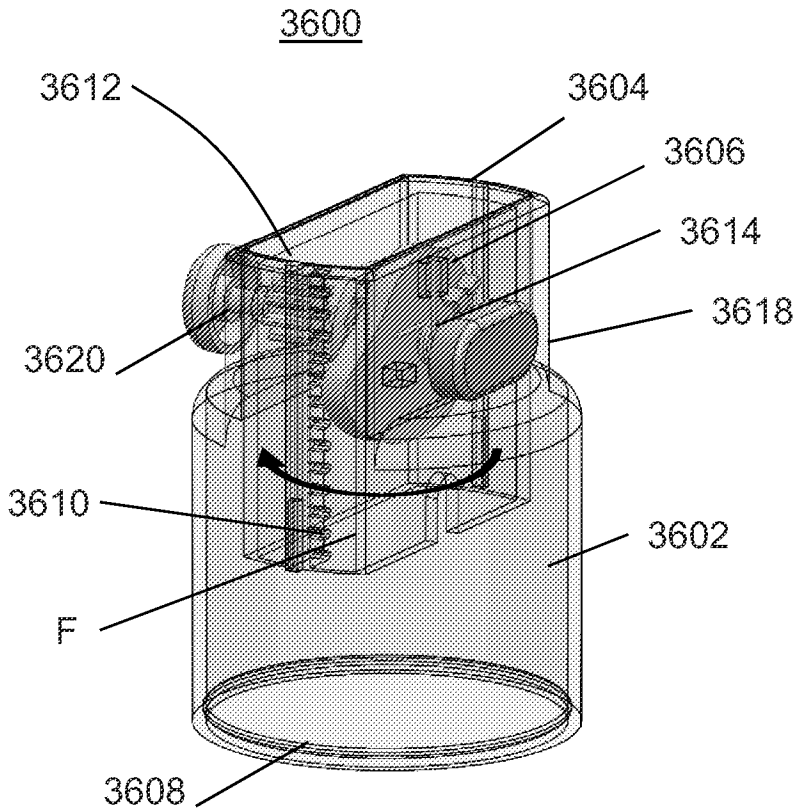

FIGURE 114

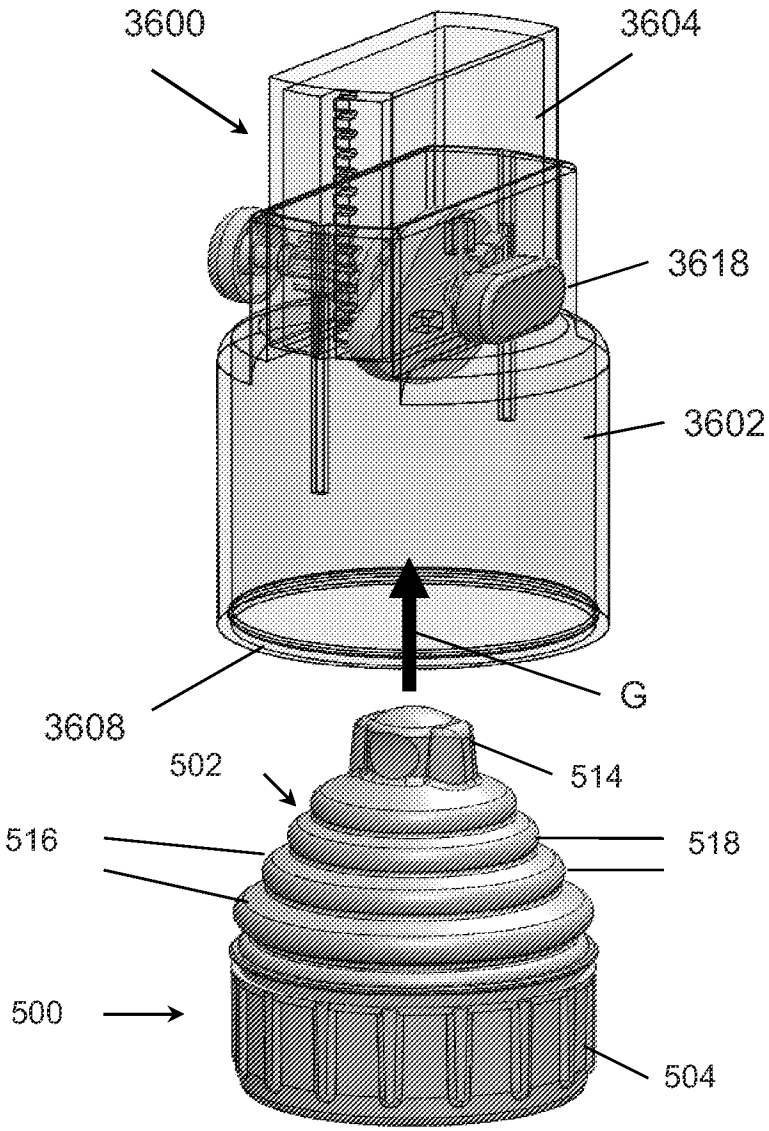

FIGURE 115

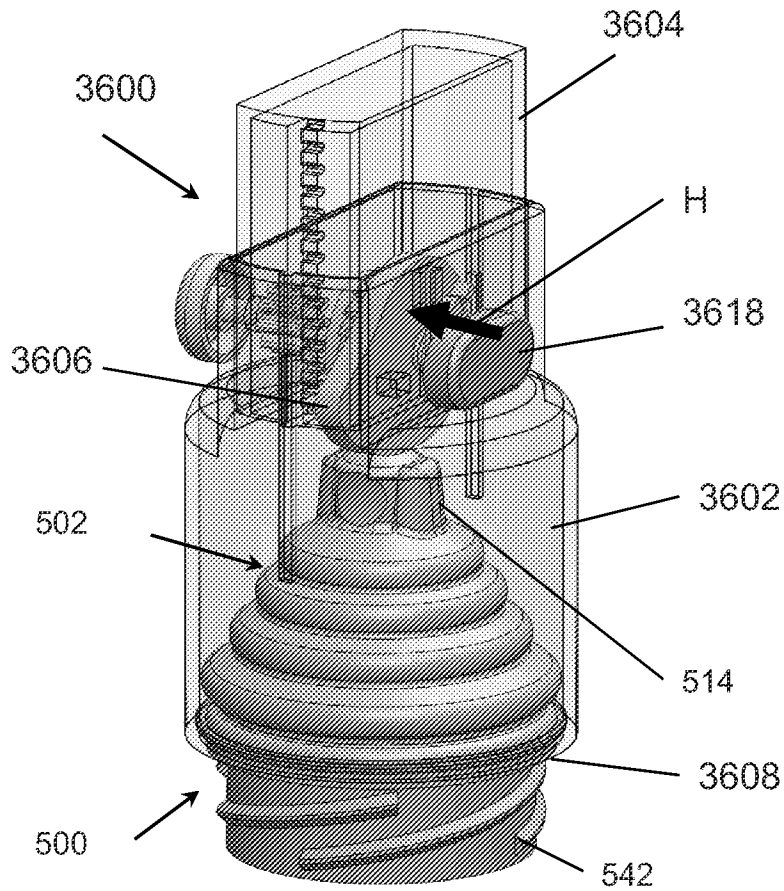

FIGURE 116

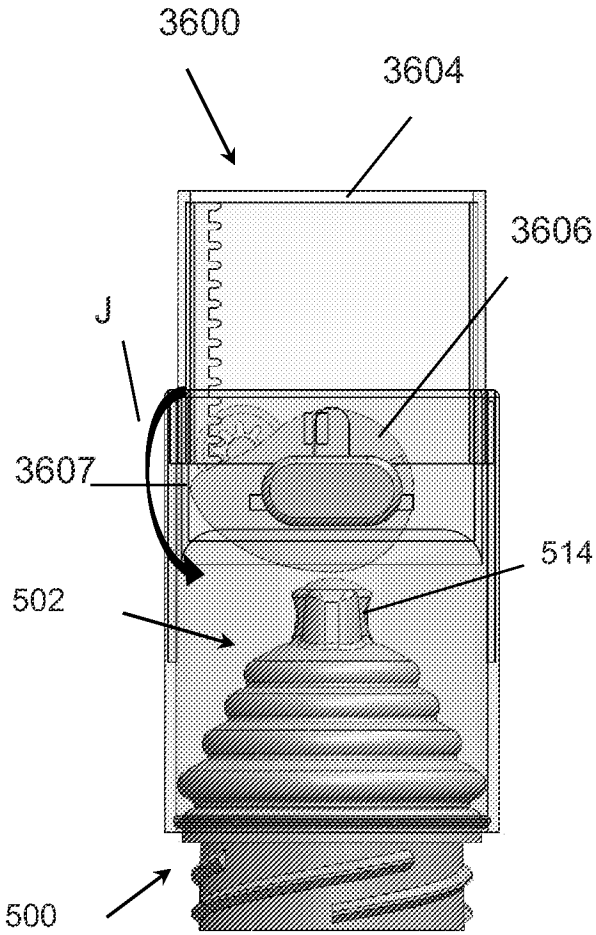

FIGURE 117

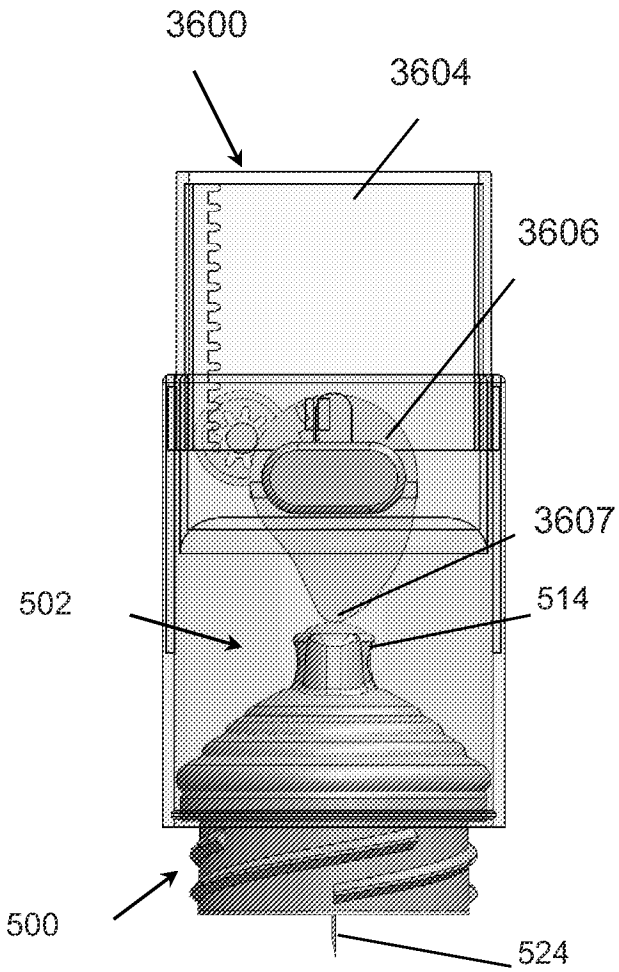

FIGURE 118

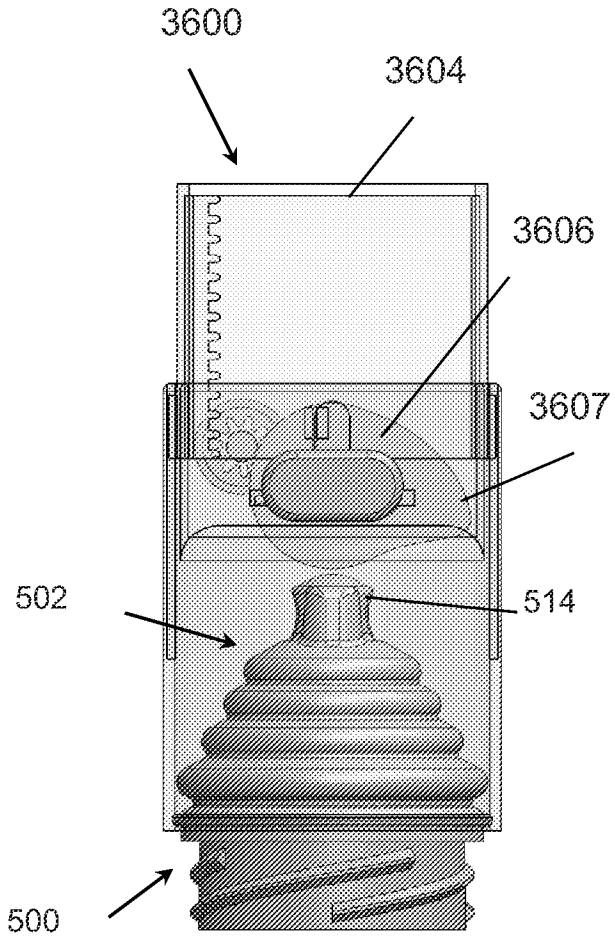

FIGURE 119

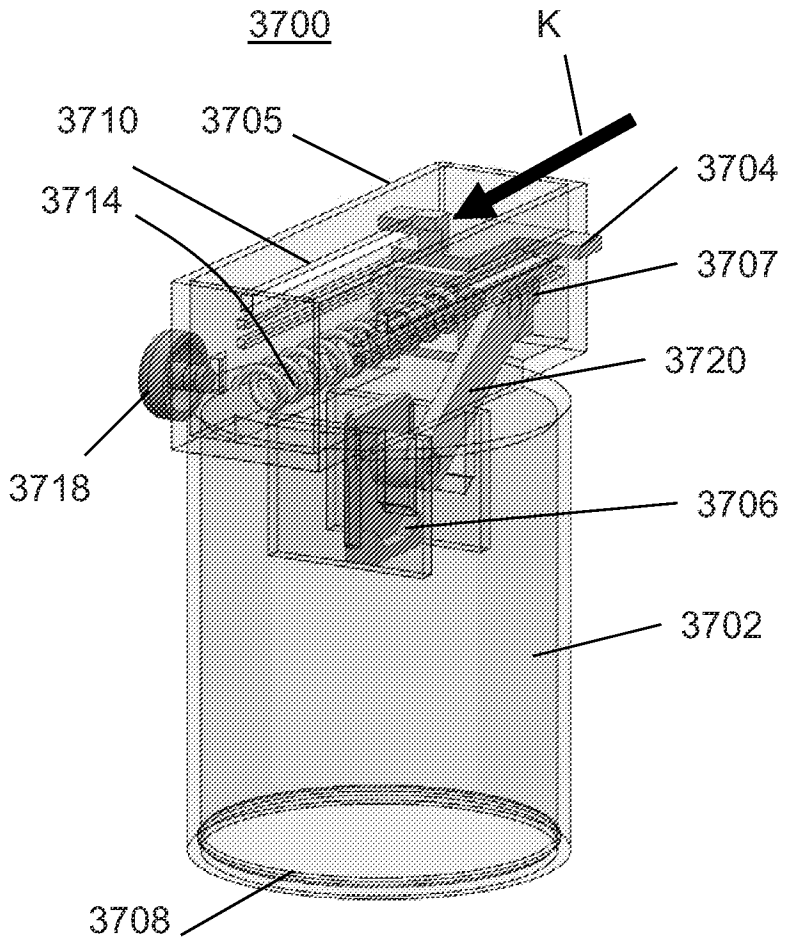

FIGURE 120

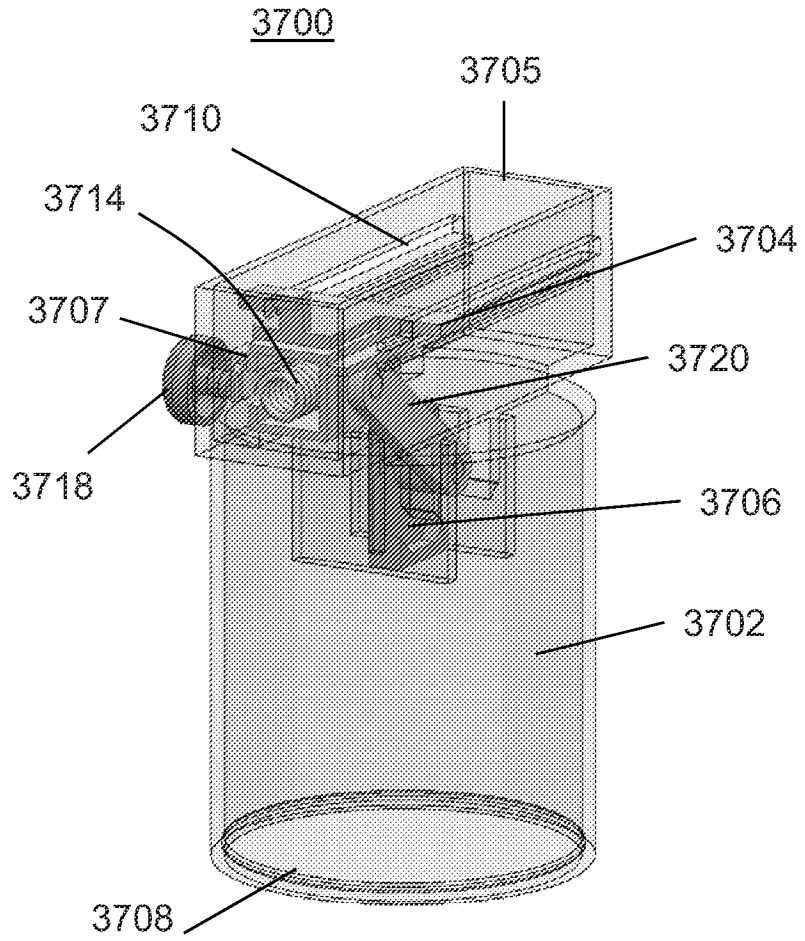

FIGURE 121

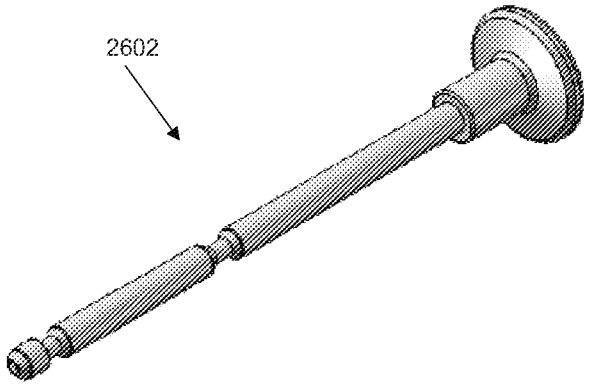

FIG. 110A

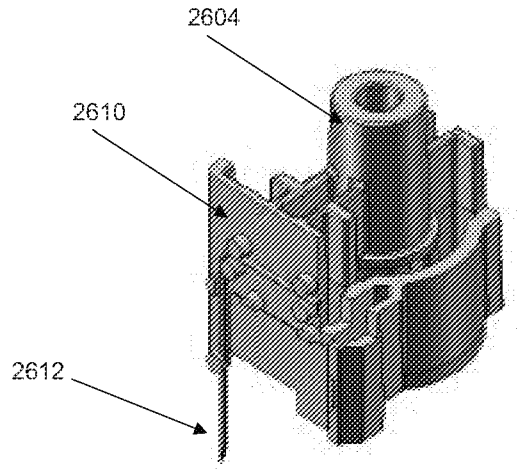

FIG. 110B

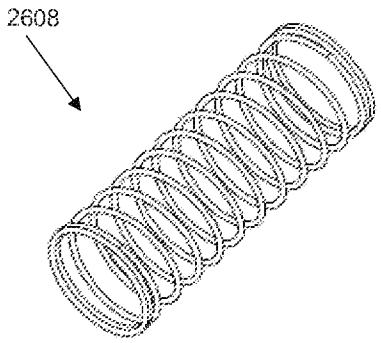

FIG. 110C

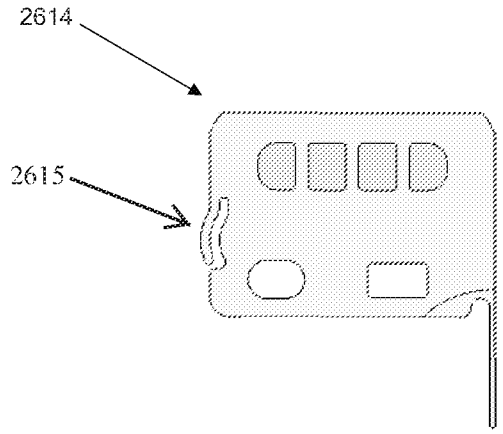

FIG. 110D

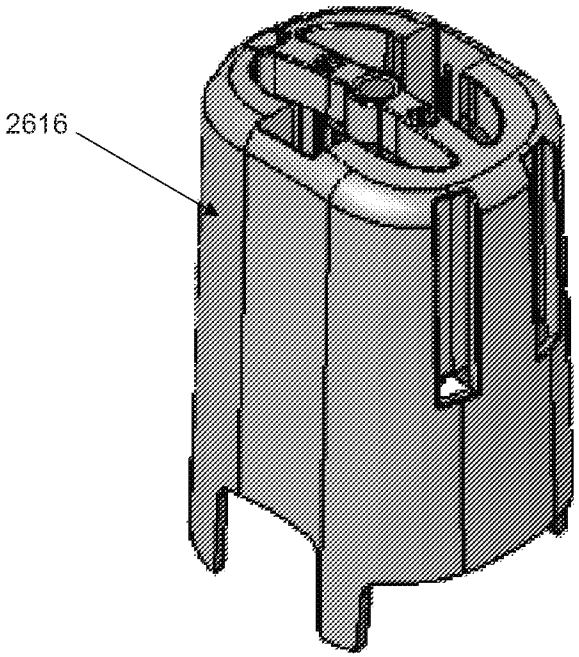

FIG. 110E

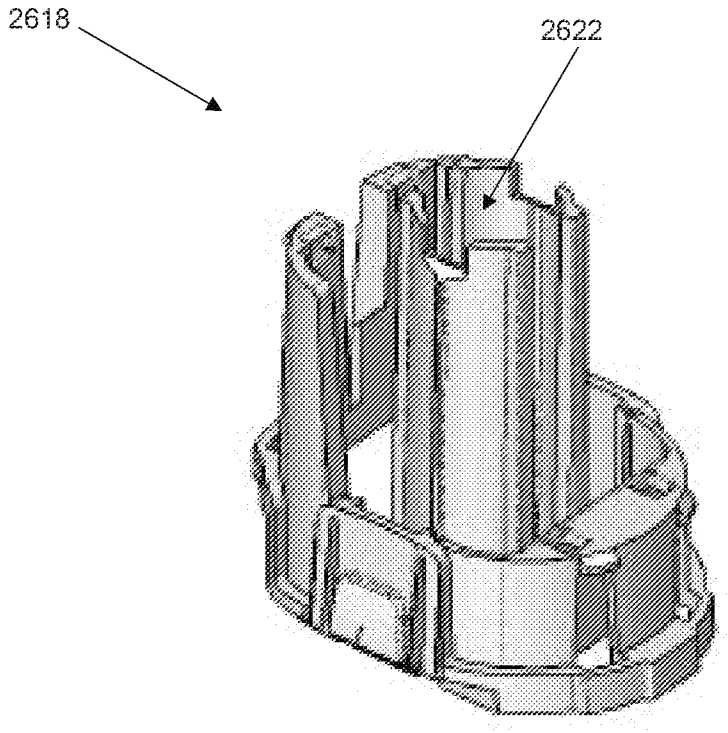

FIG. 110F

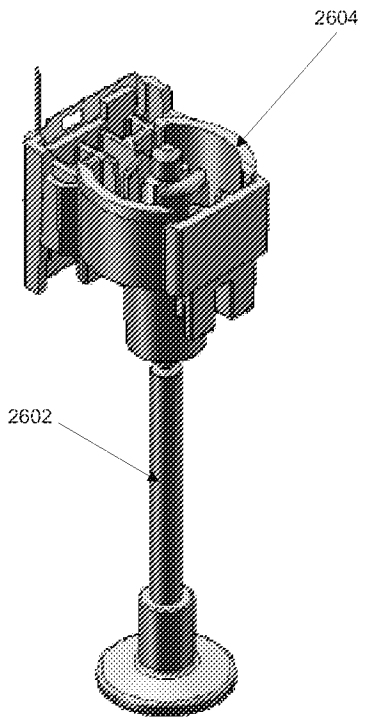

FIG. 111A

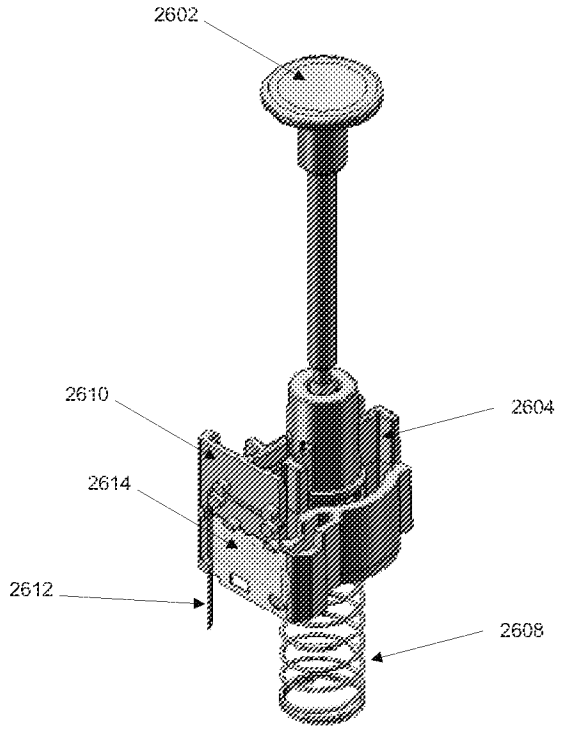

FIG. 111B

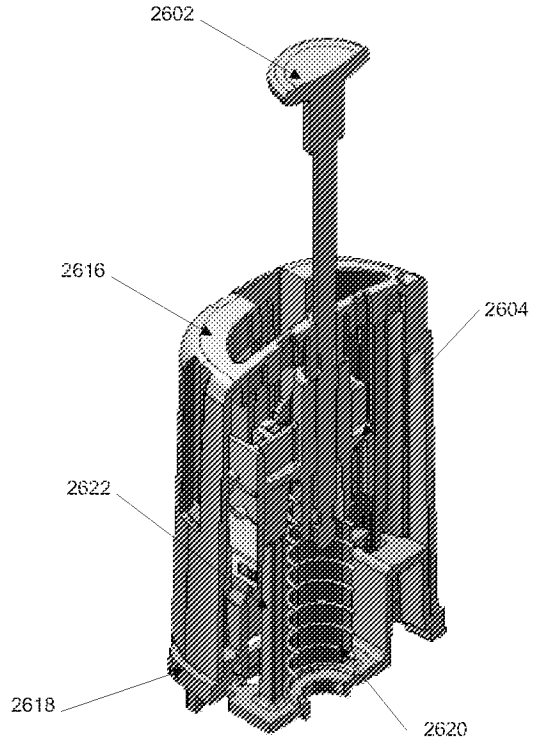

FIG. 111C

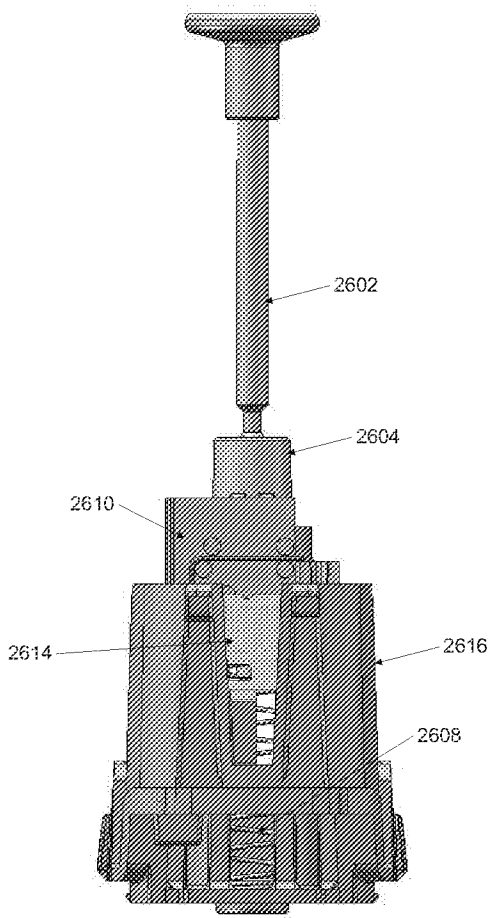

FIG. 112A

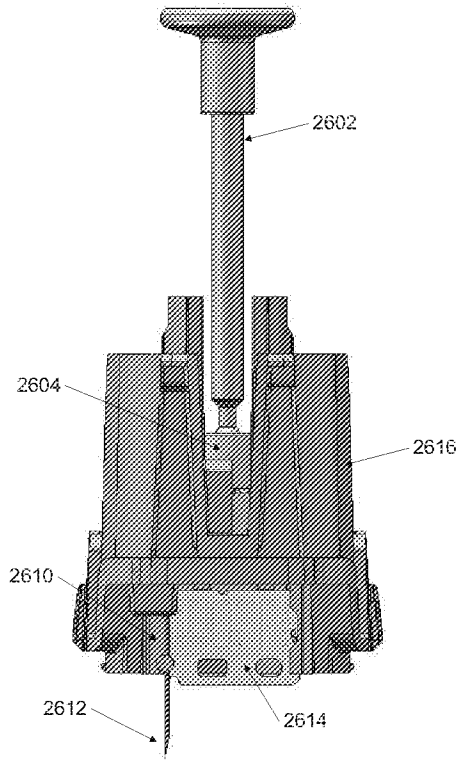

FIG. 112B

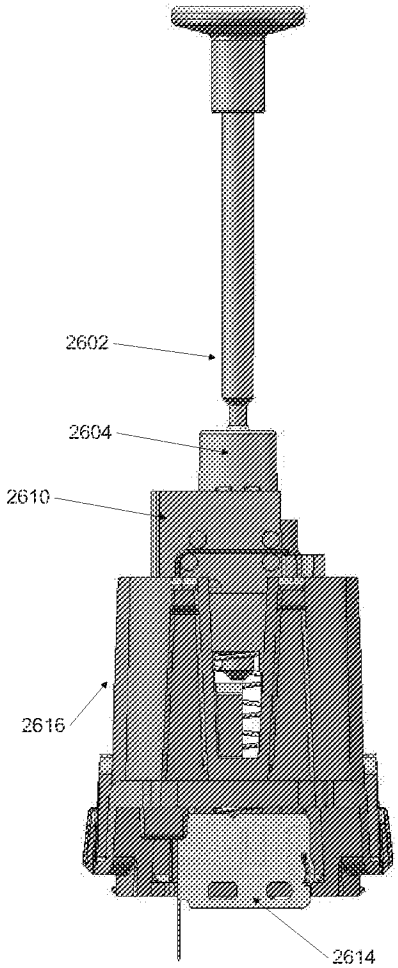

FIG. 112C

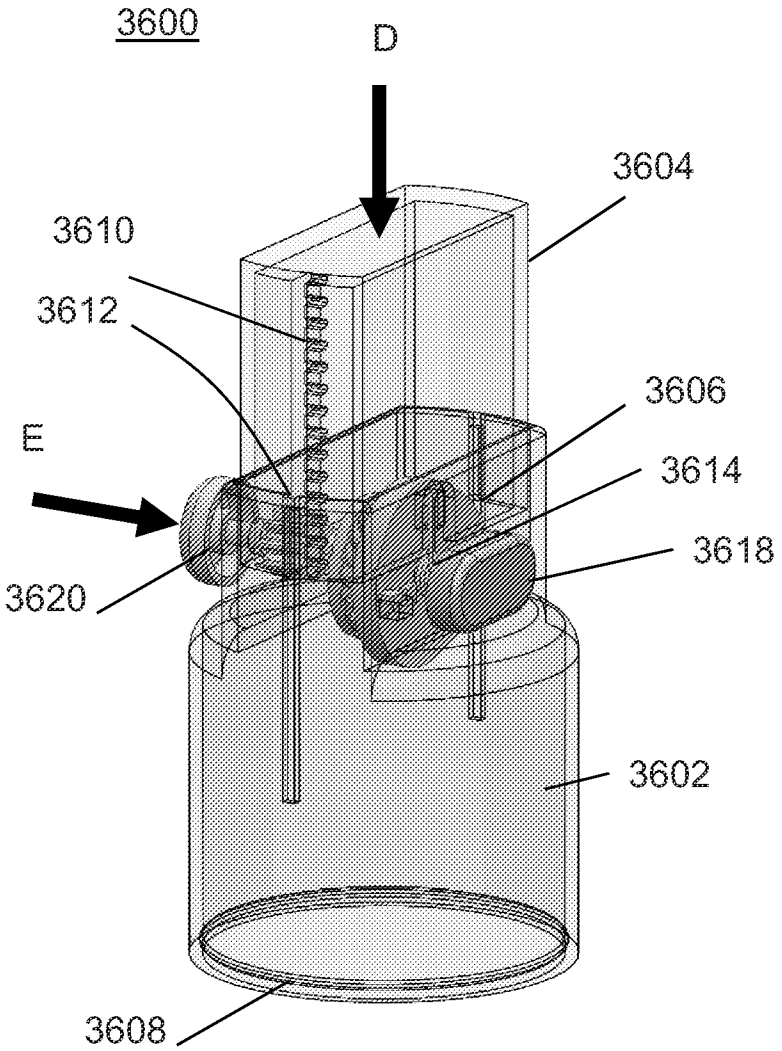

FIGURE 113

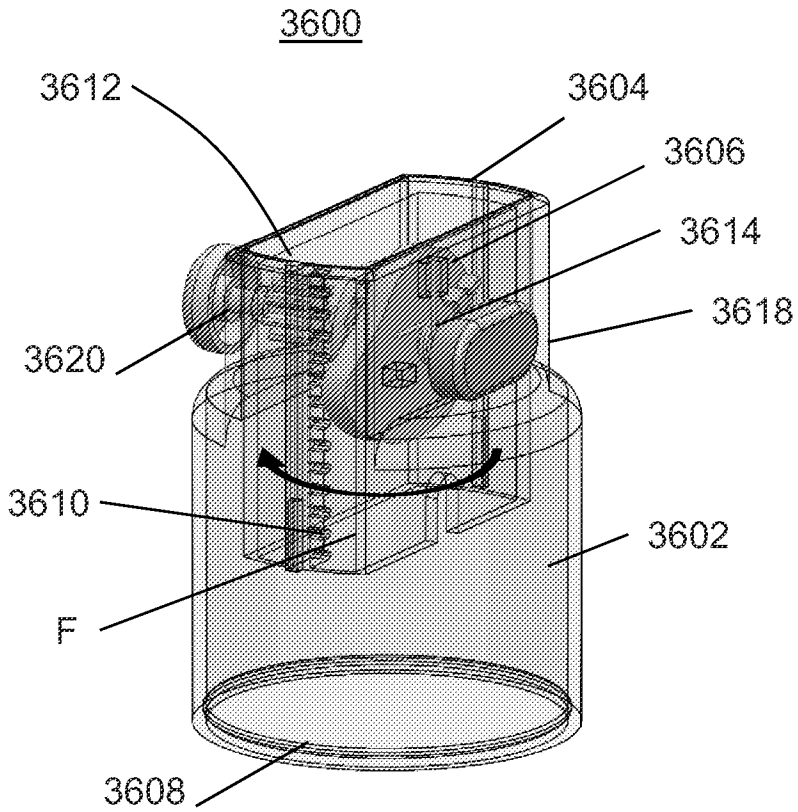

FIGURE 114

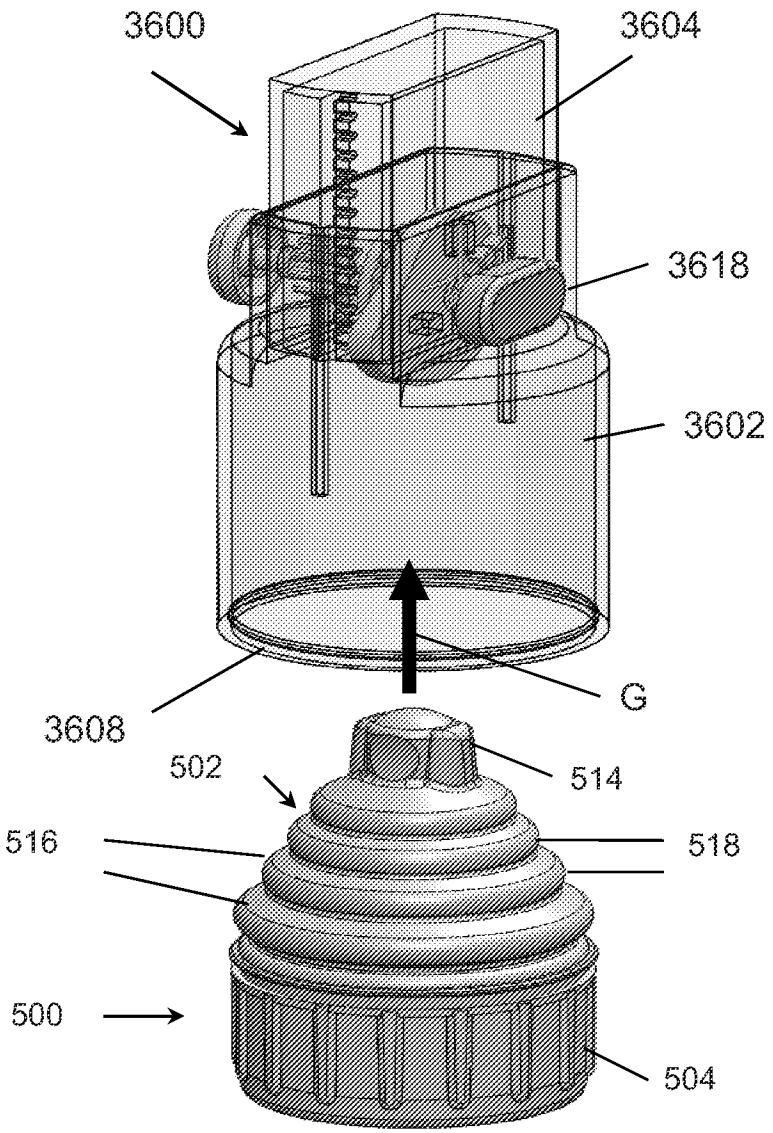

FIGURE 115

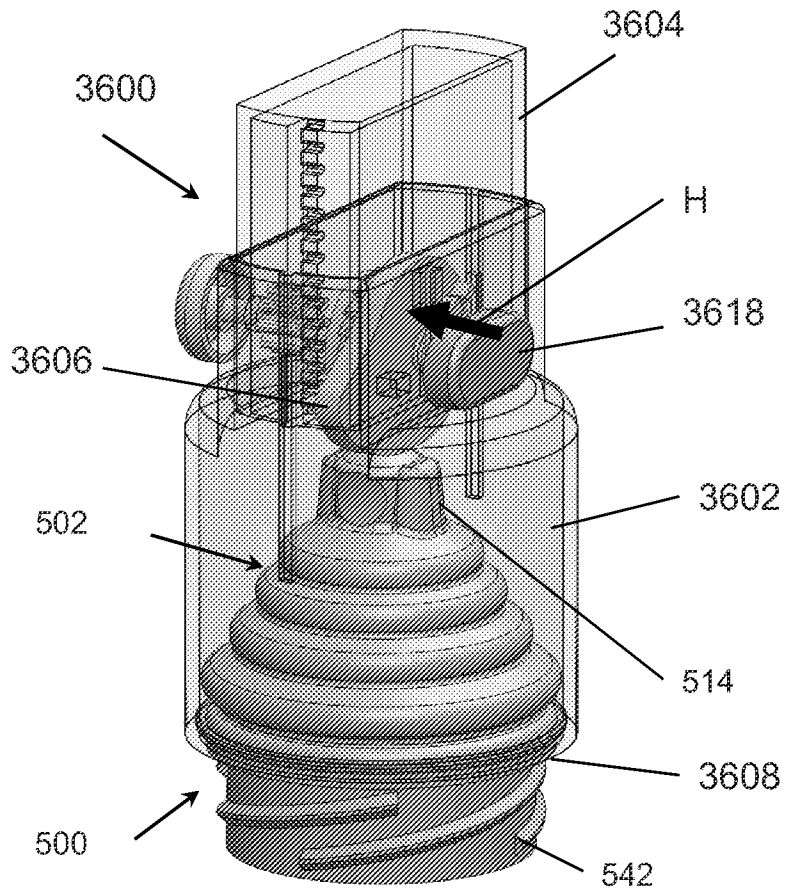

FIGURE 116

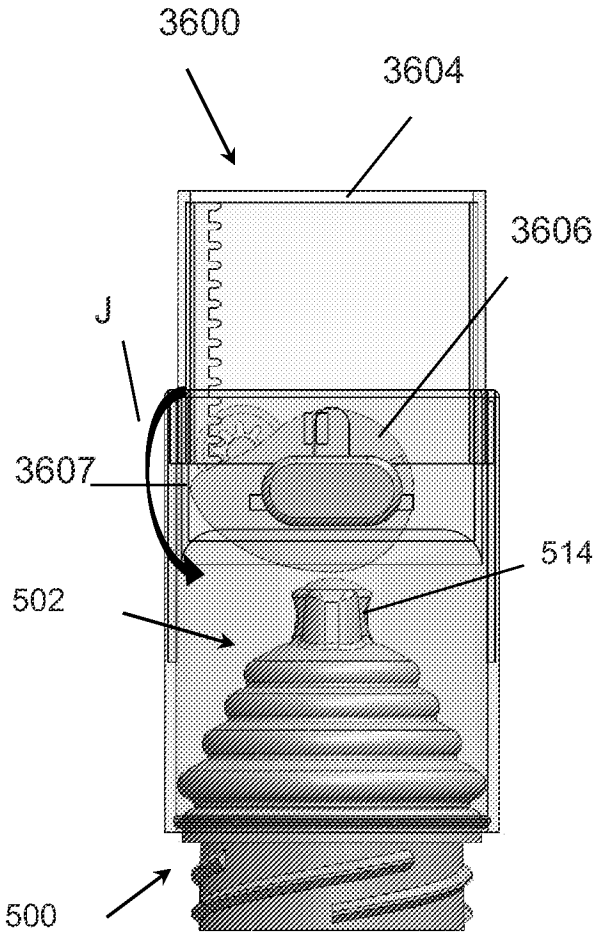

FIGURE 117

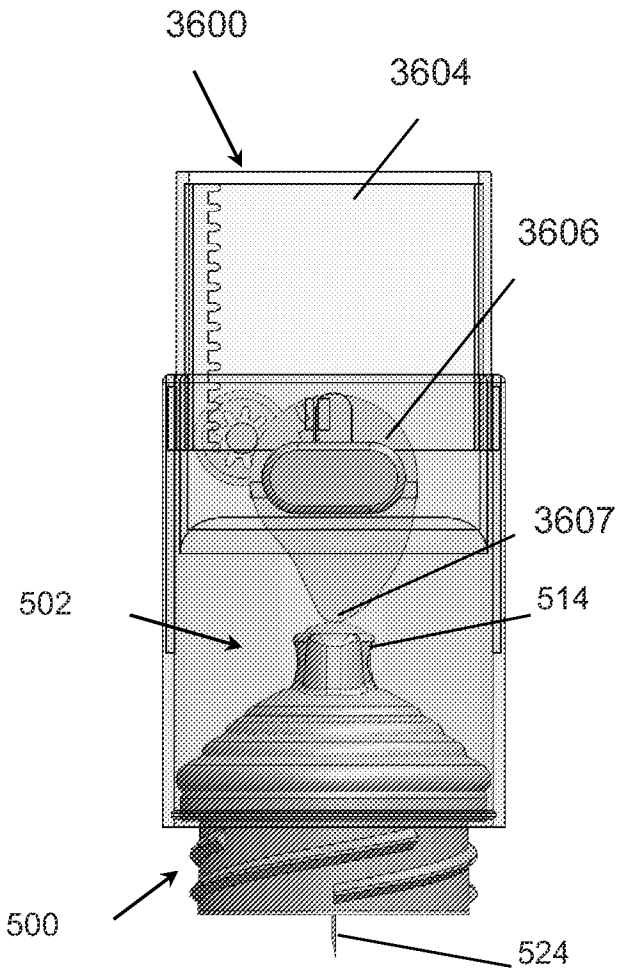

FIGURE 118

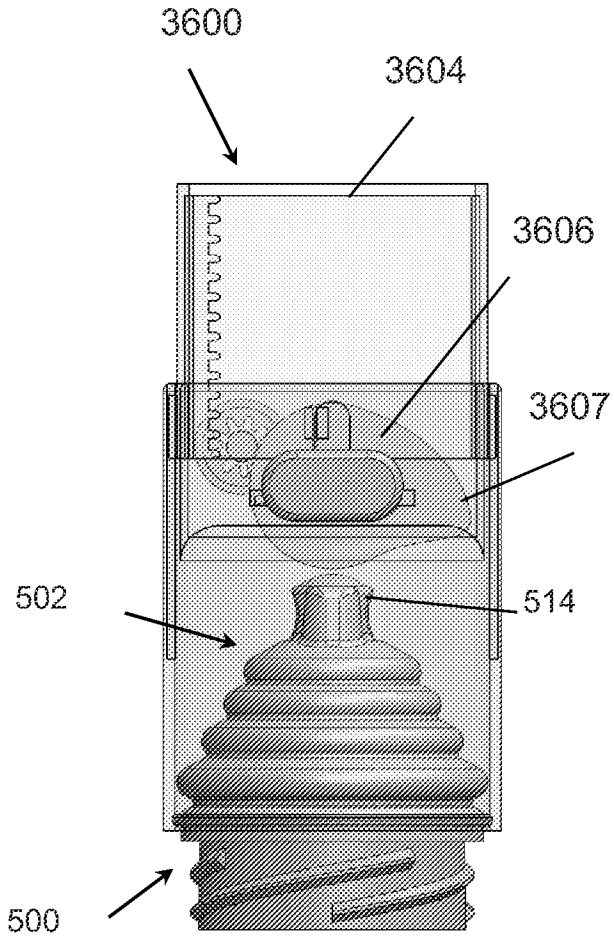

FIGURE 119

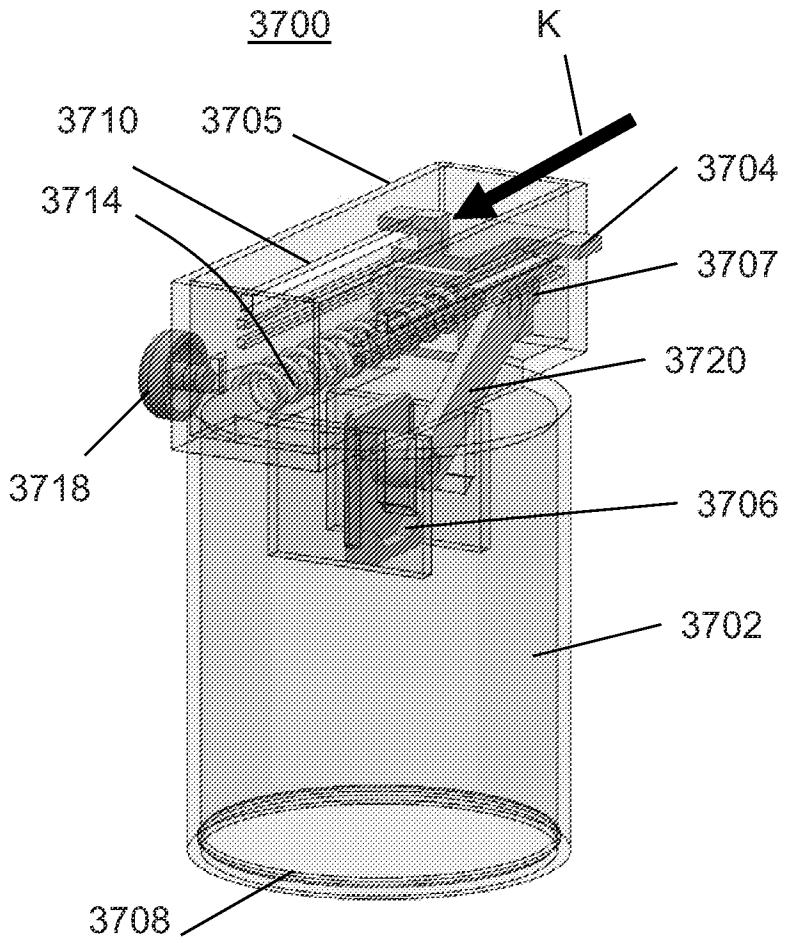

FIGURE 120

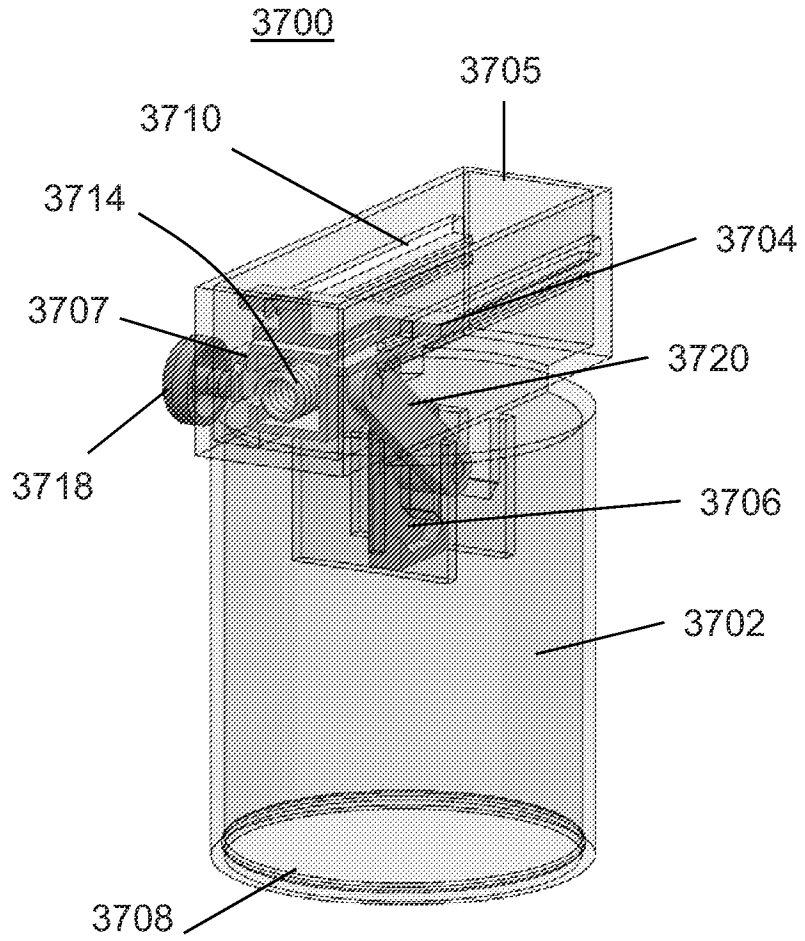

FIGURE 121

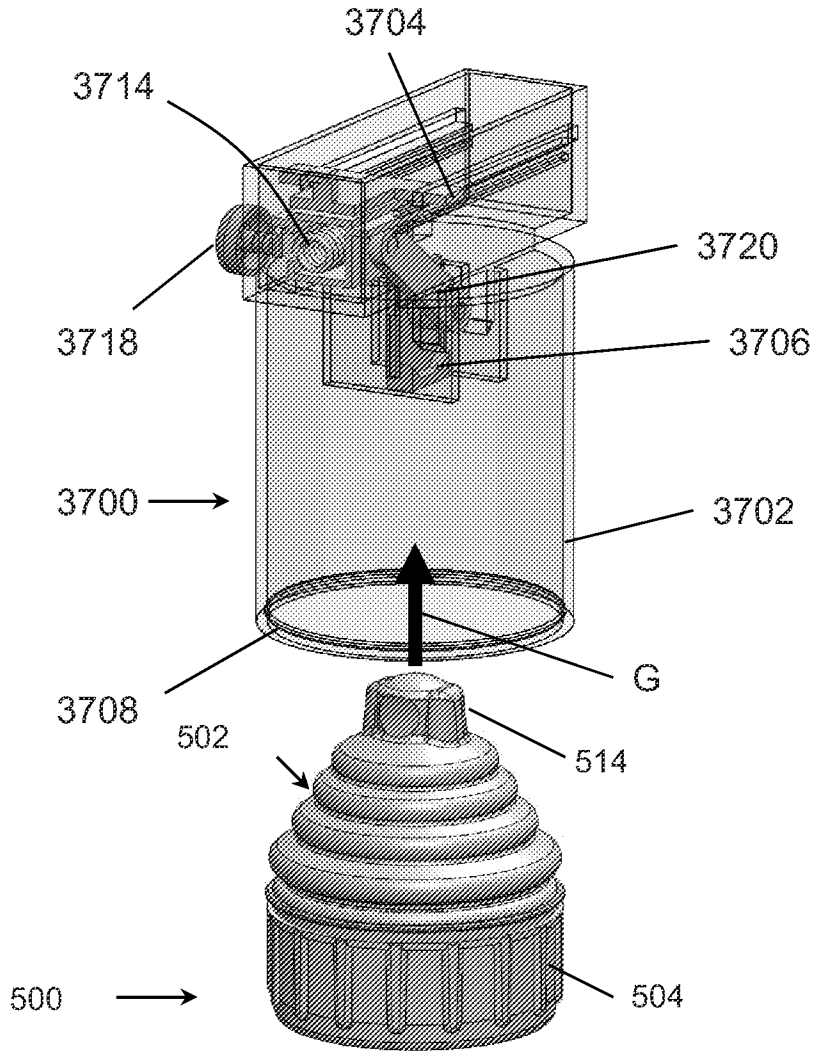

FIGURE 122

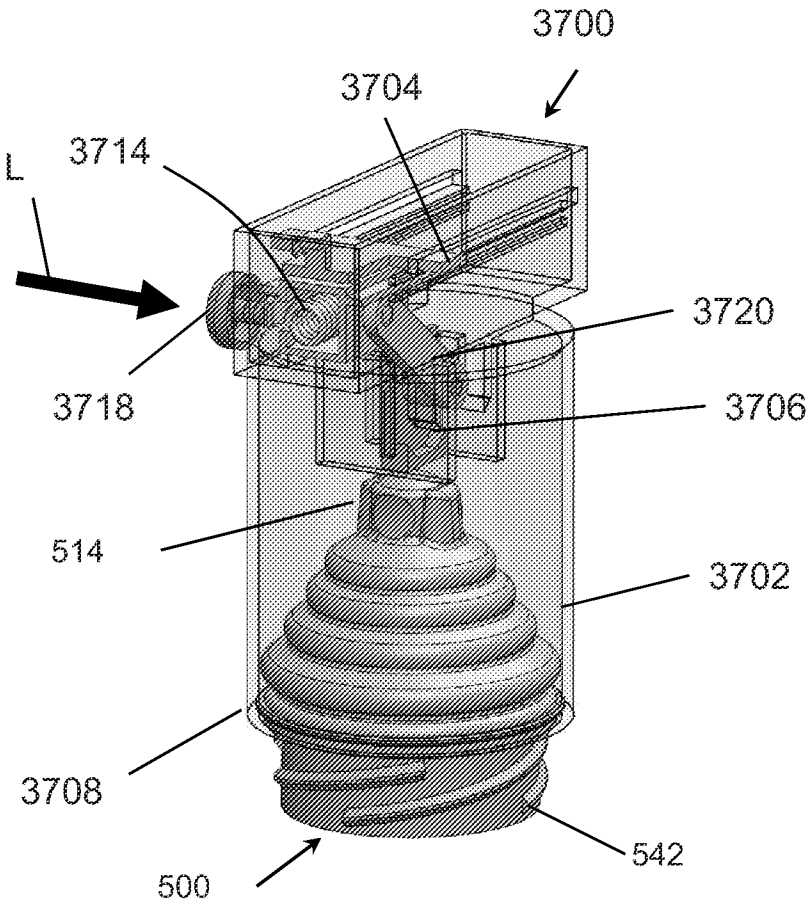

FIGURE 123

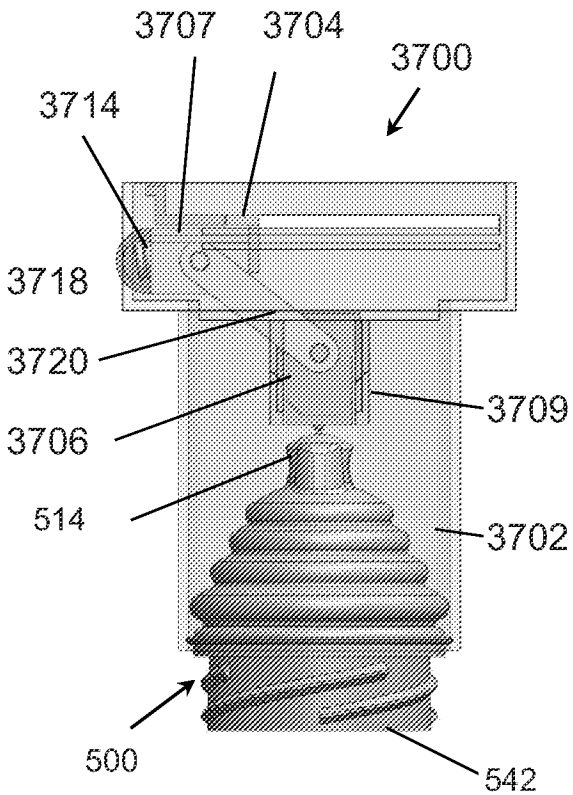

FIGURE 124

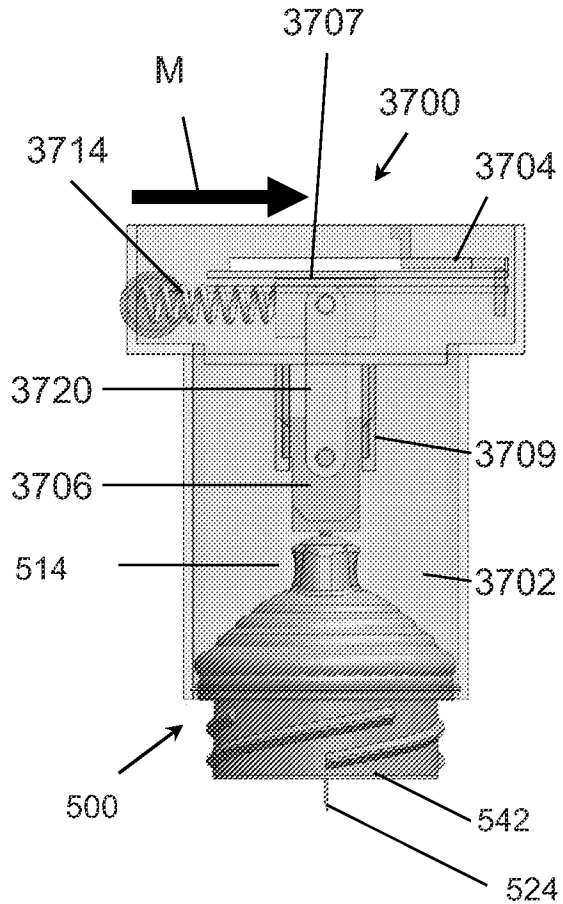

FIGURE 125

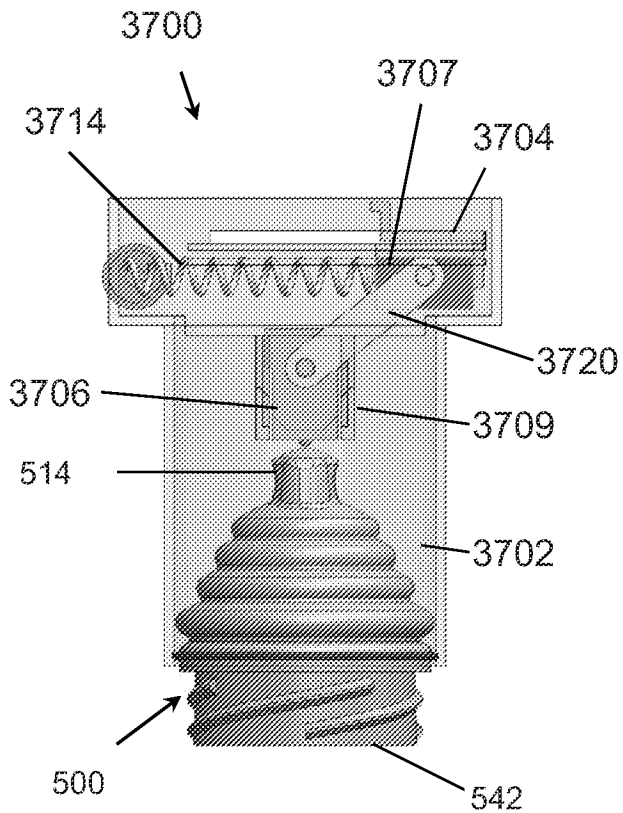

FIGURE 126

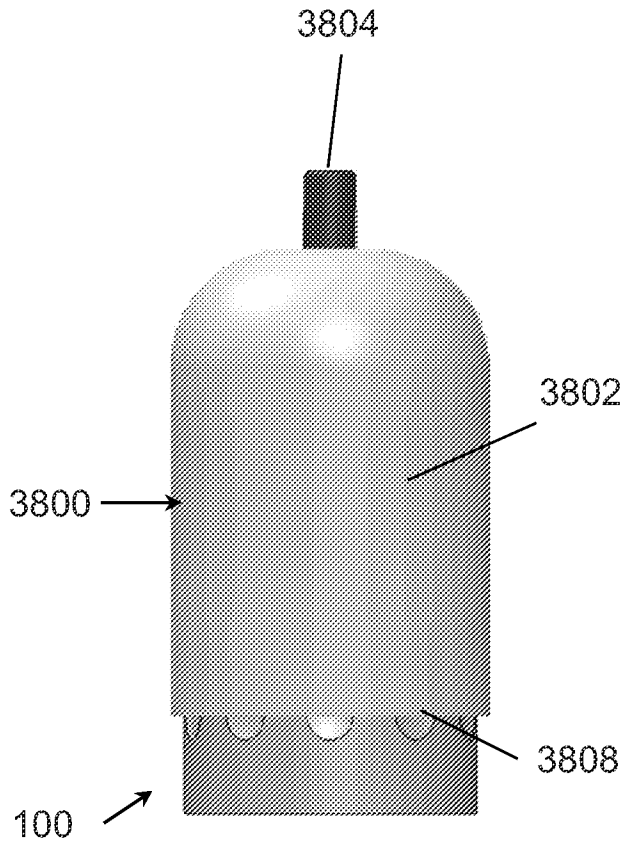

FIGURE 127

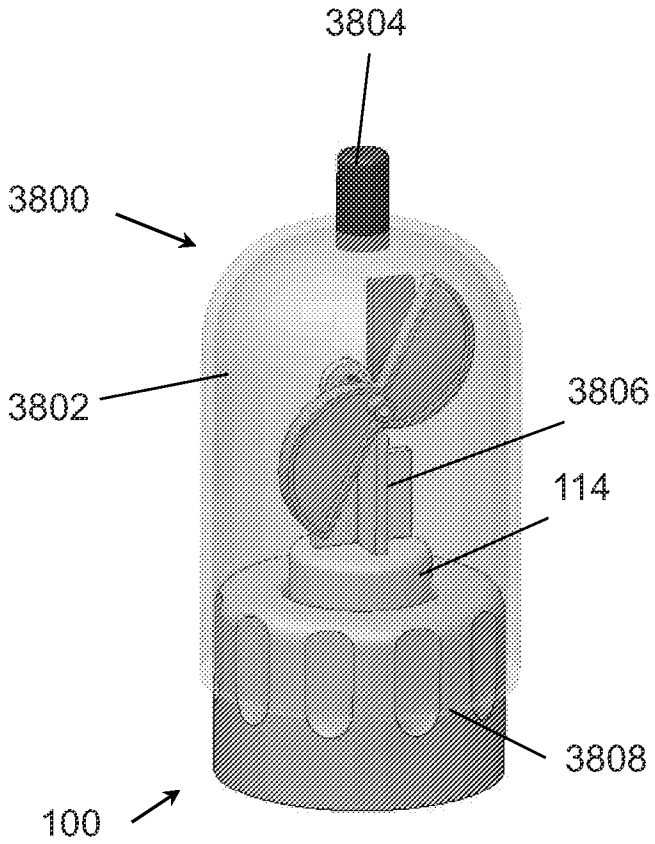

FIGURE 128

FIGURE 128A

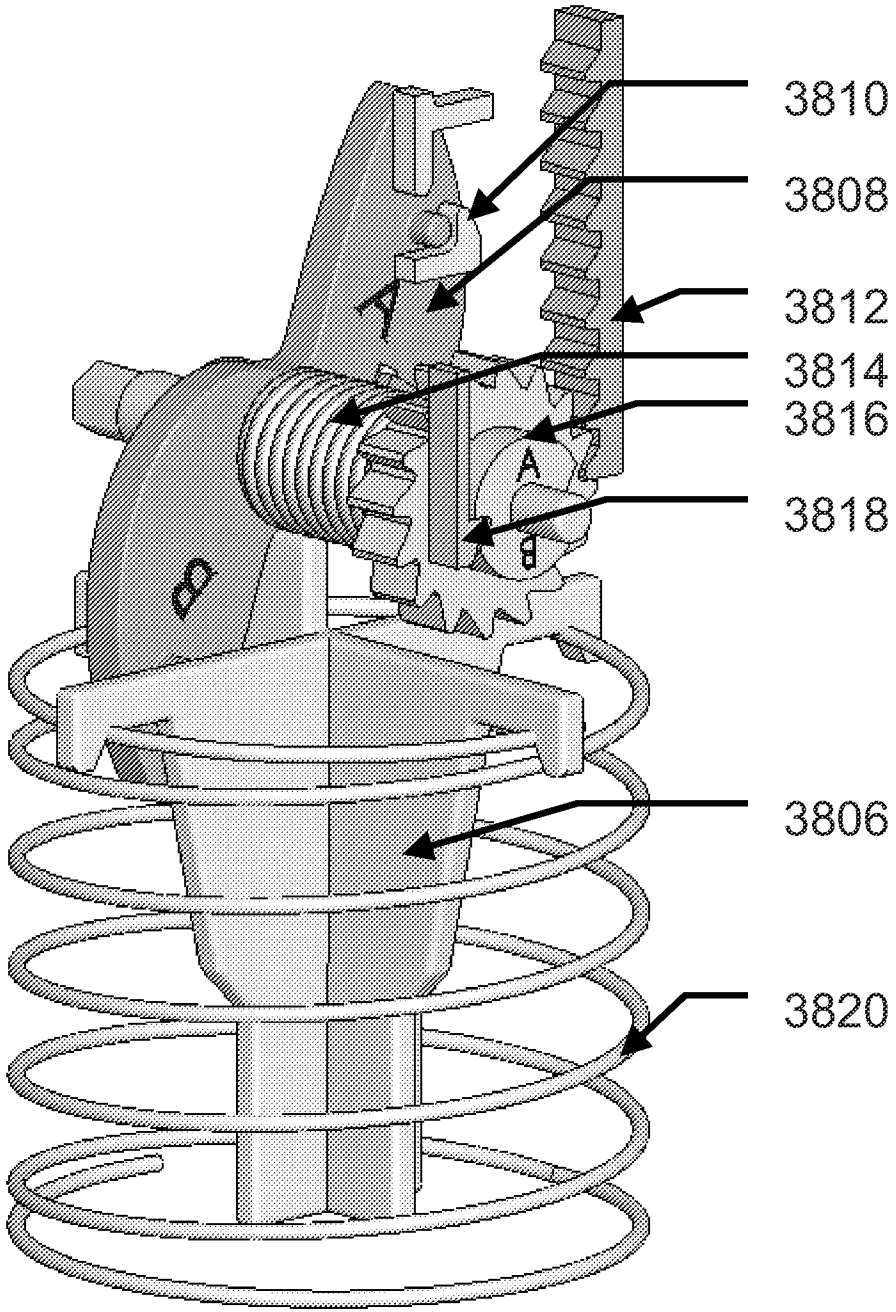

FIGURE 128B

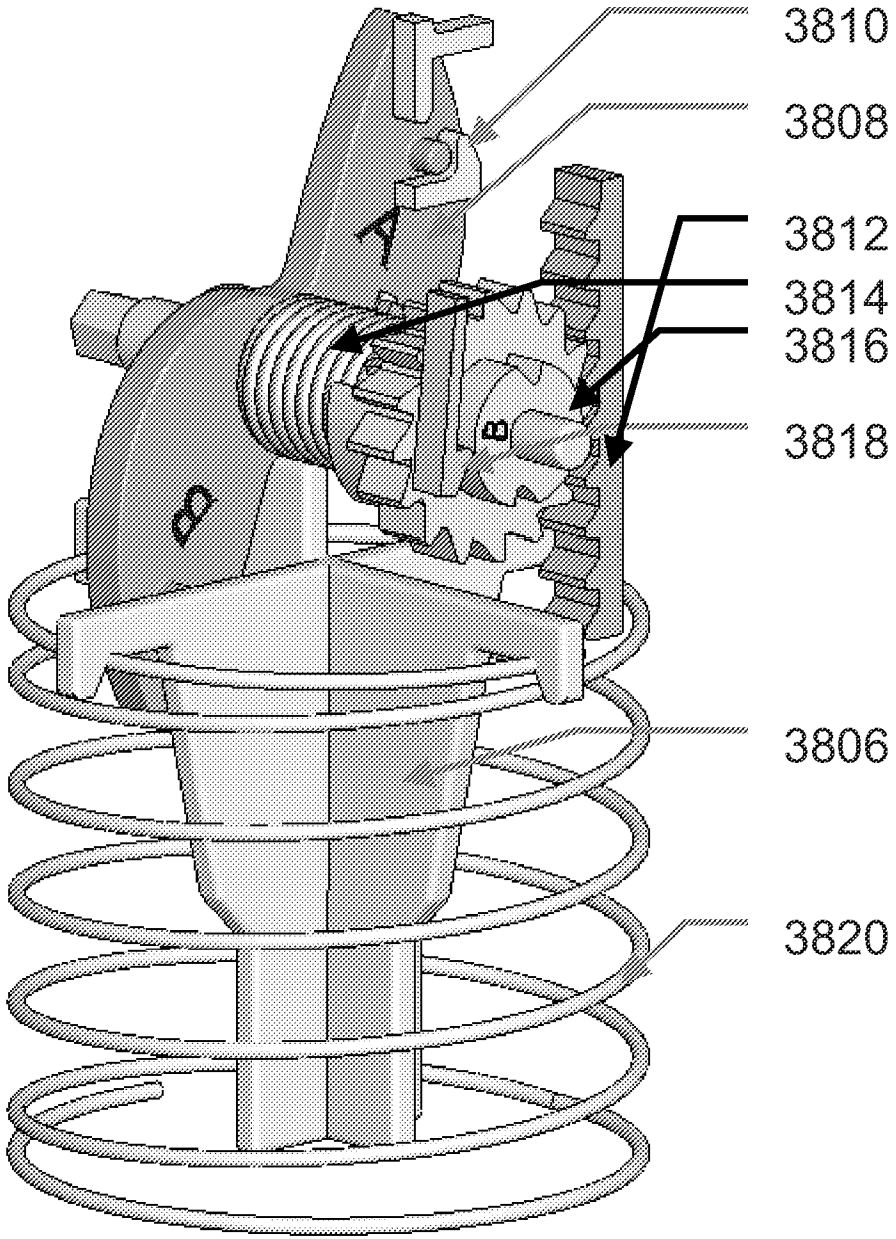

FIGURE 128C

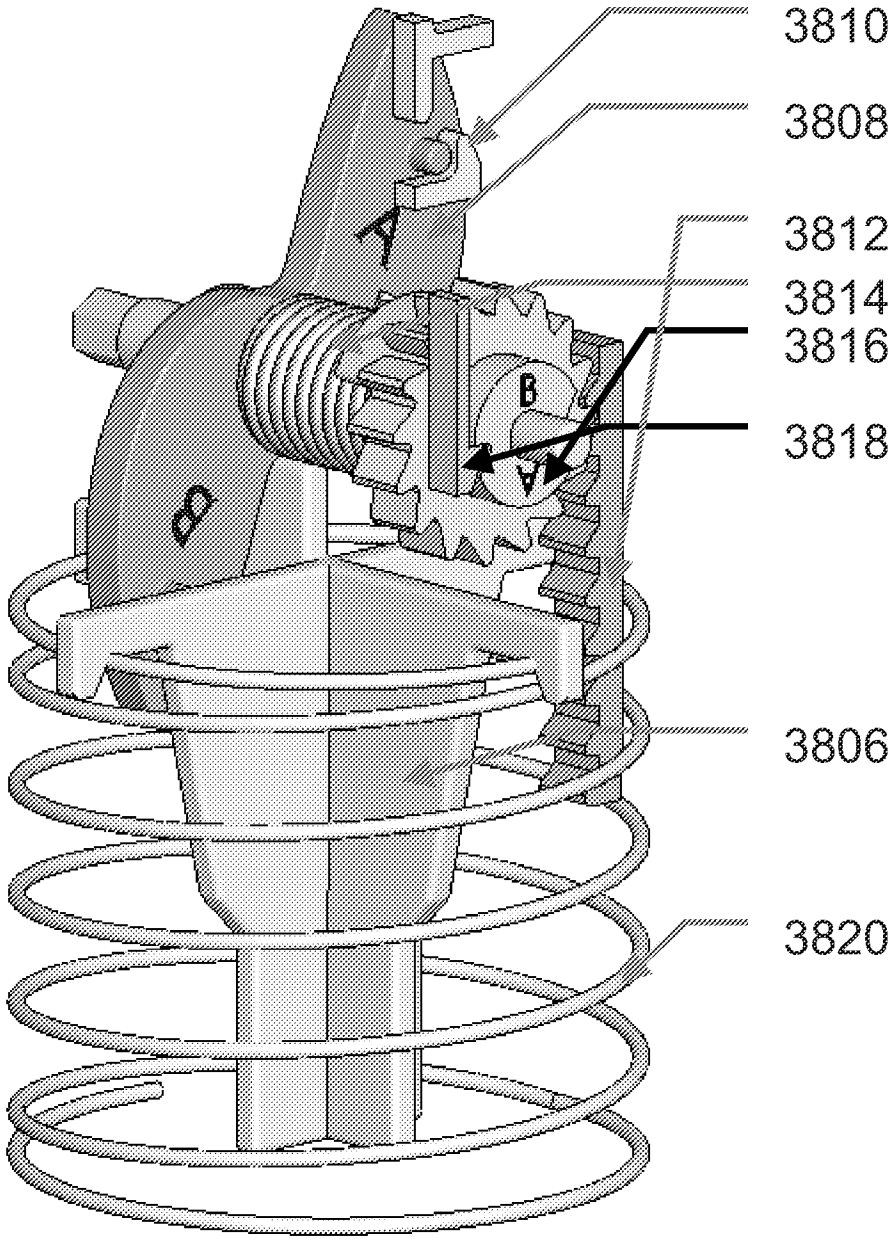

FIGURE 128D

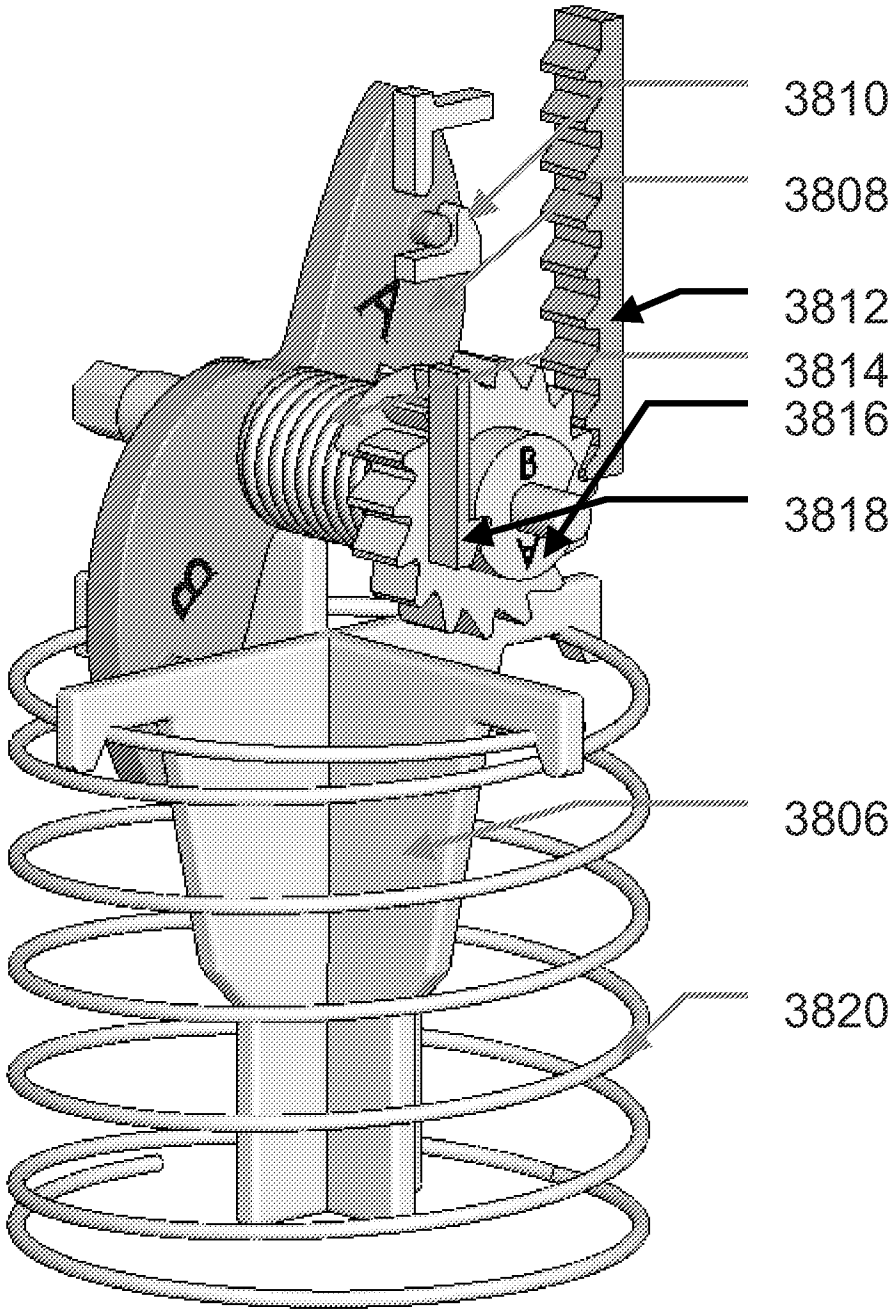

FIGURE 128E

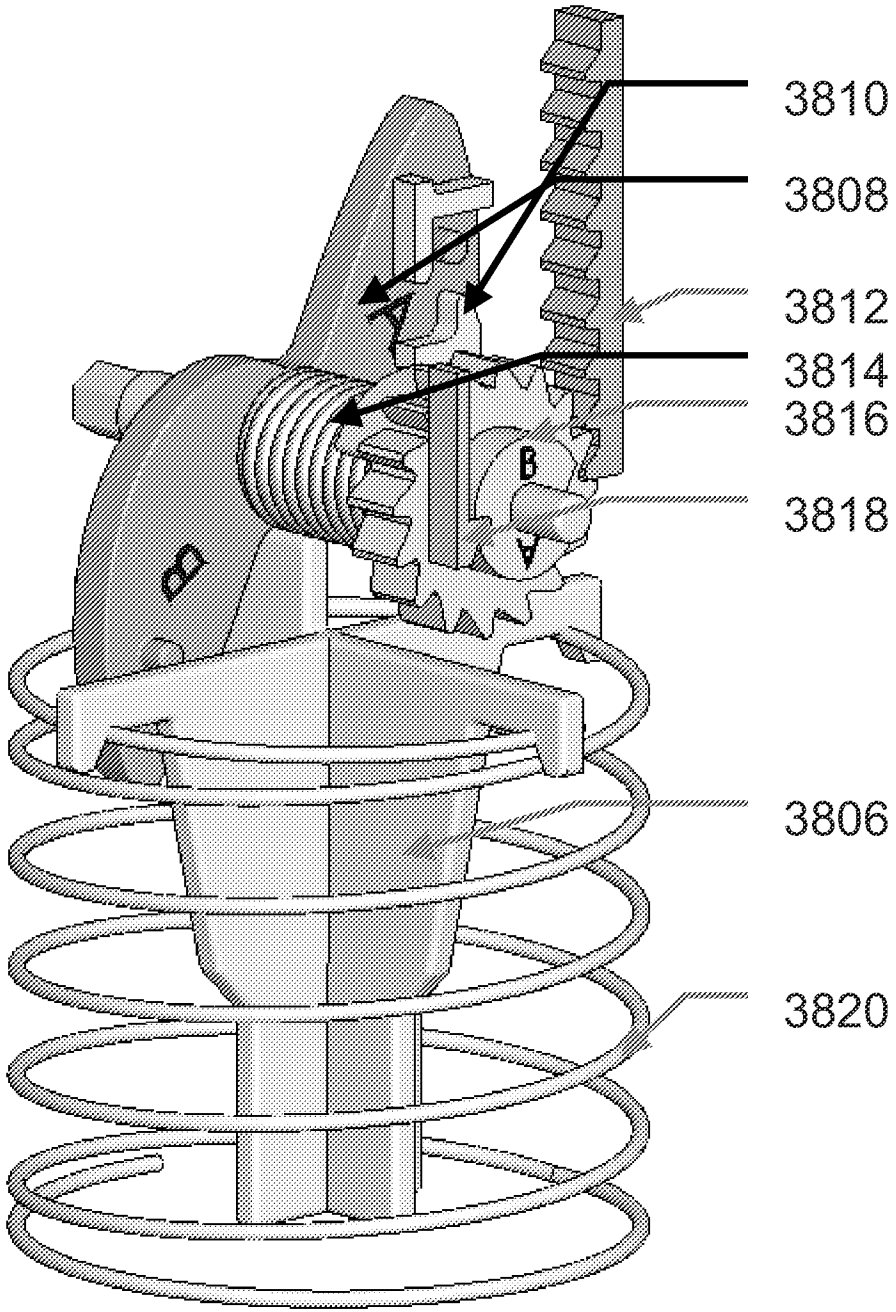

FIGURE 128F

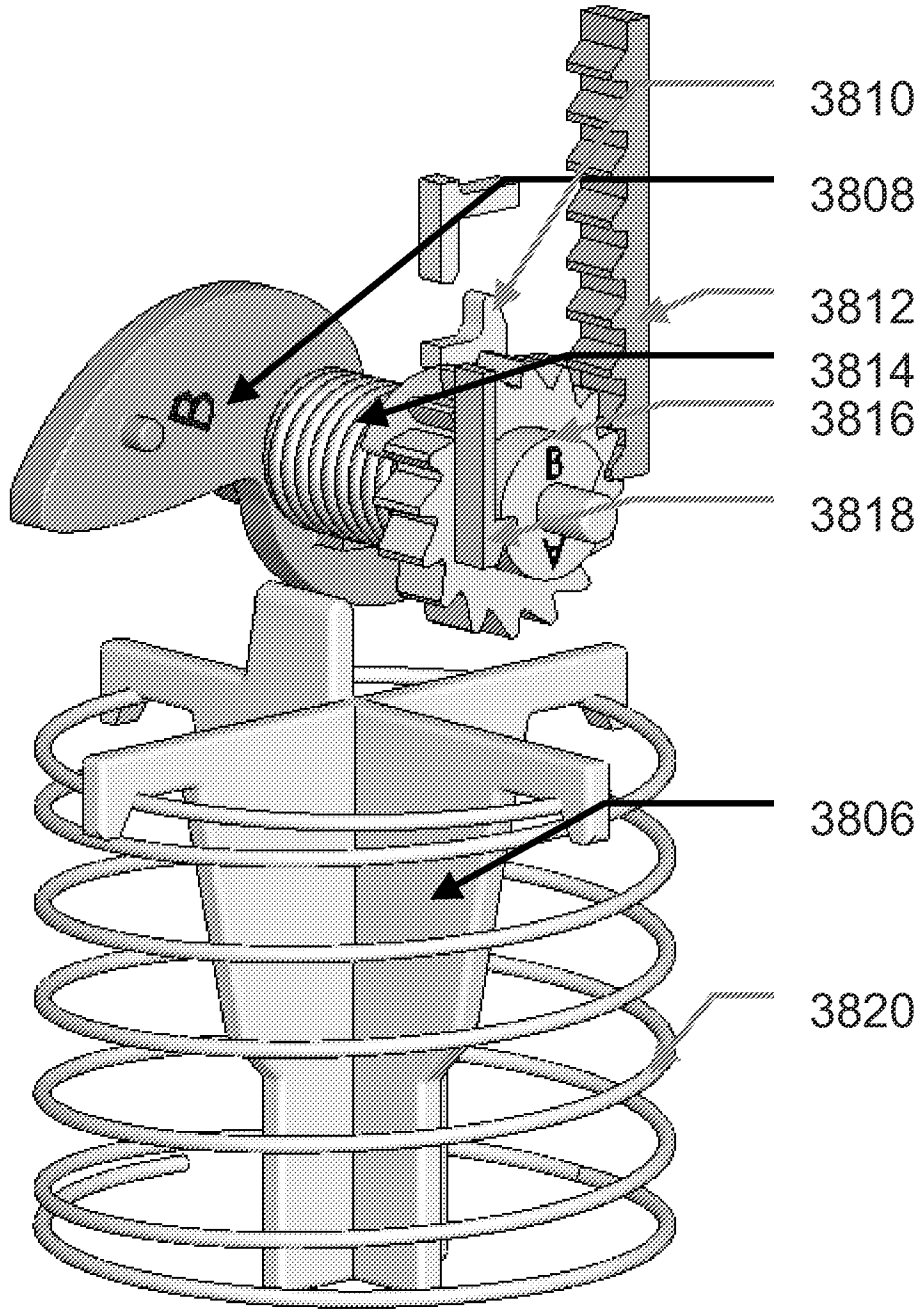

FIGURE 128G

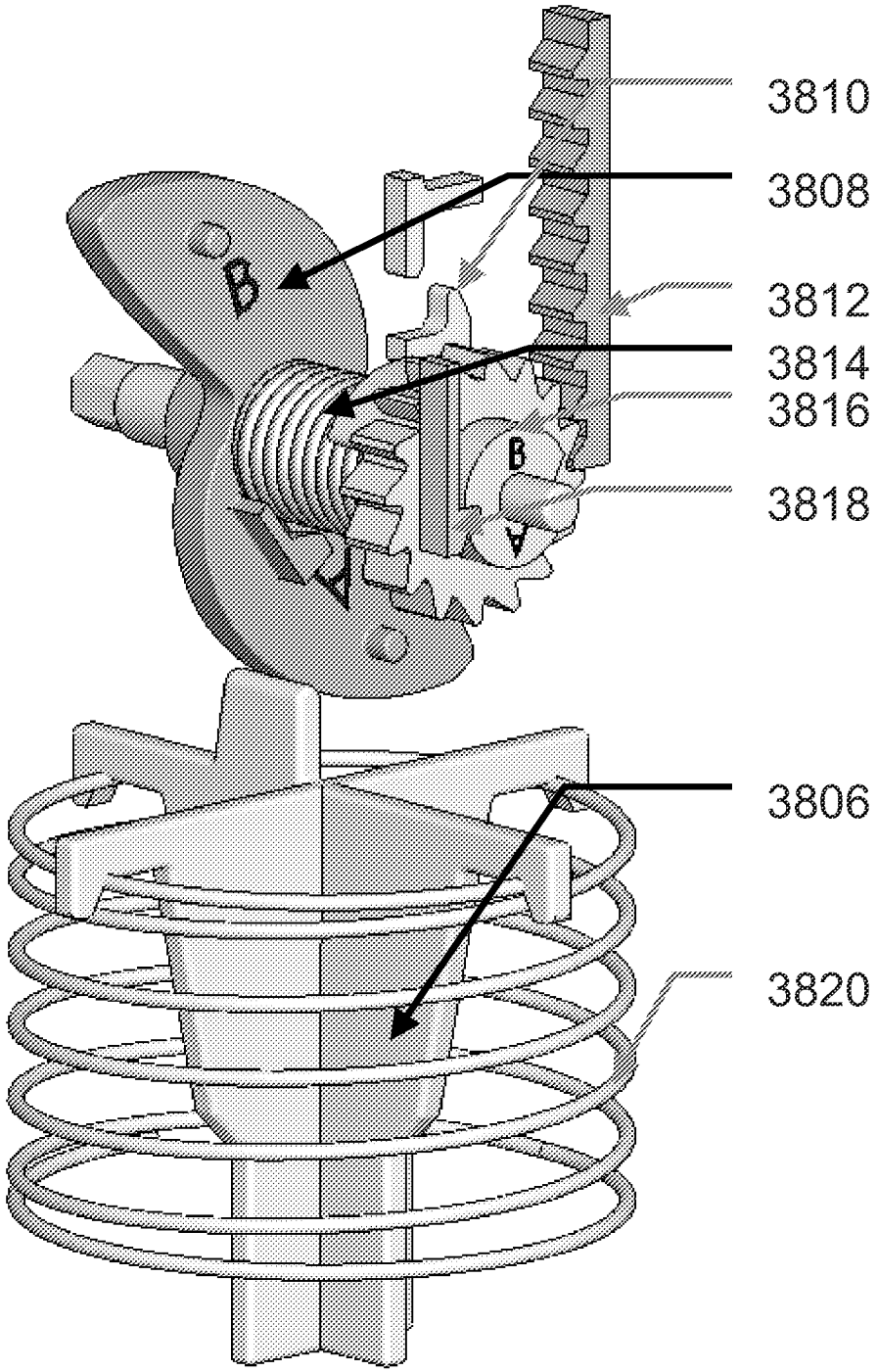

FIGURE 128H

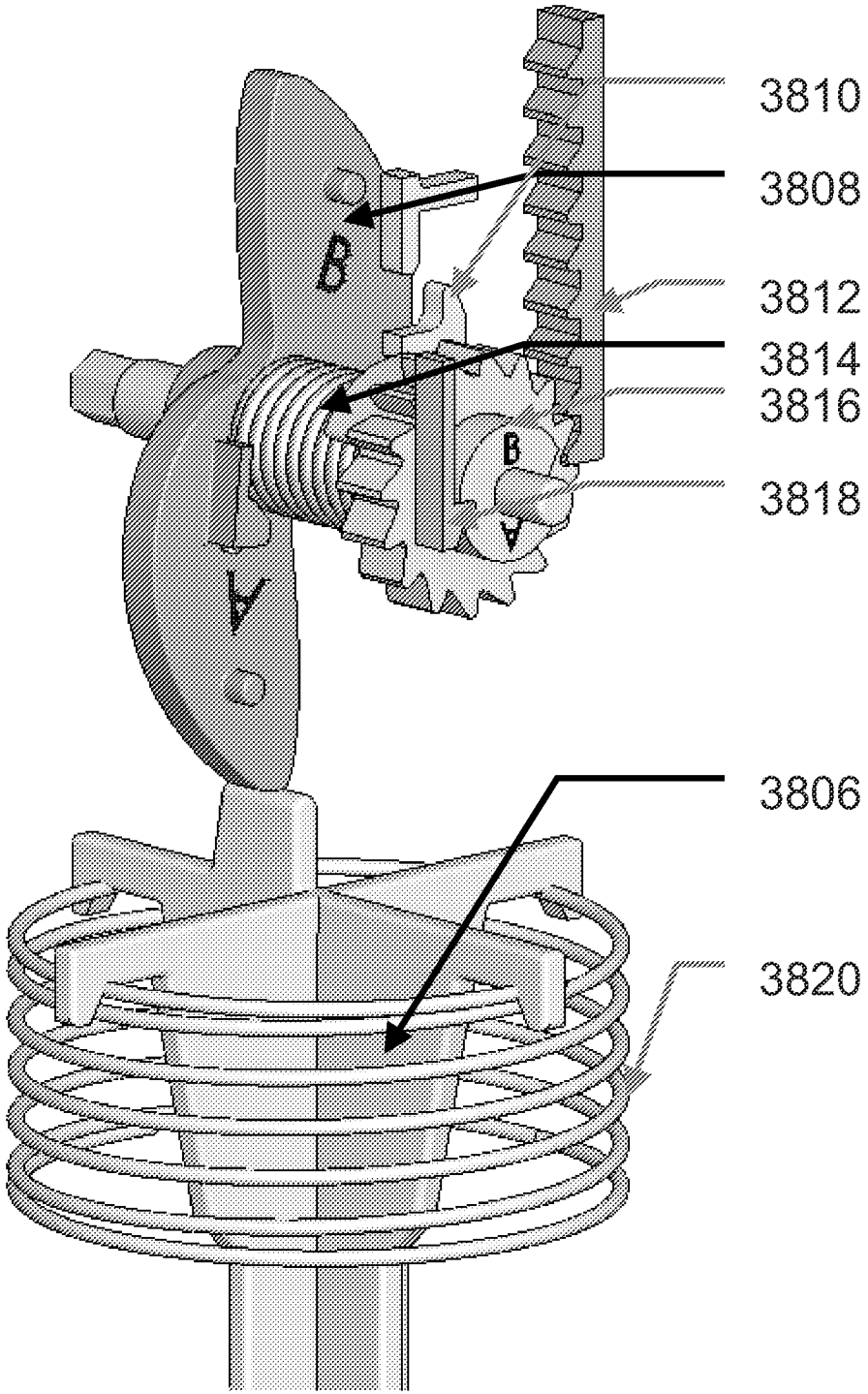

FIGURE 128I

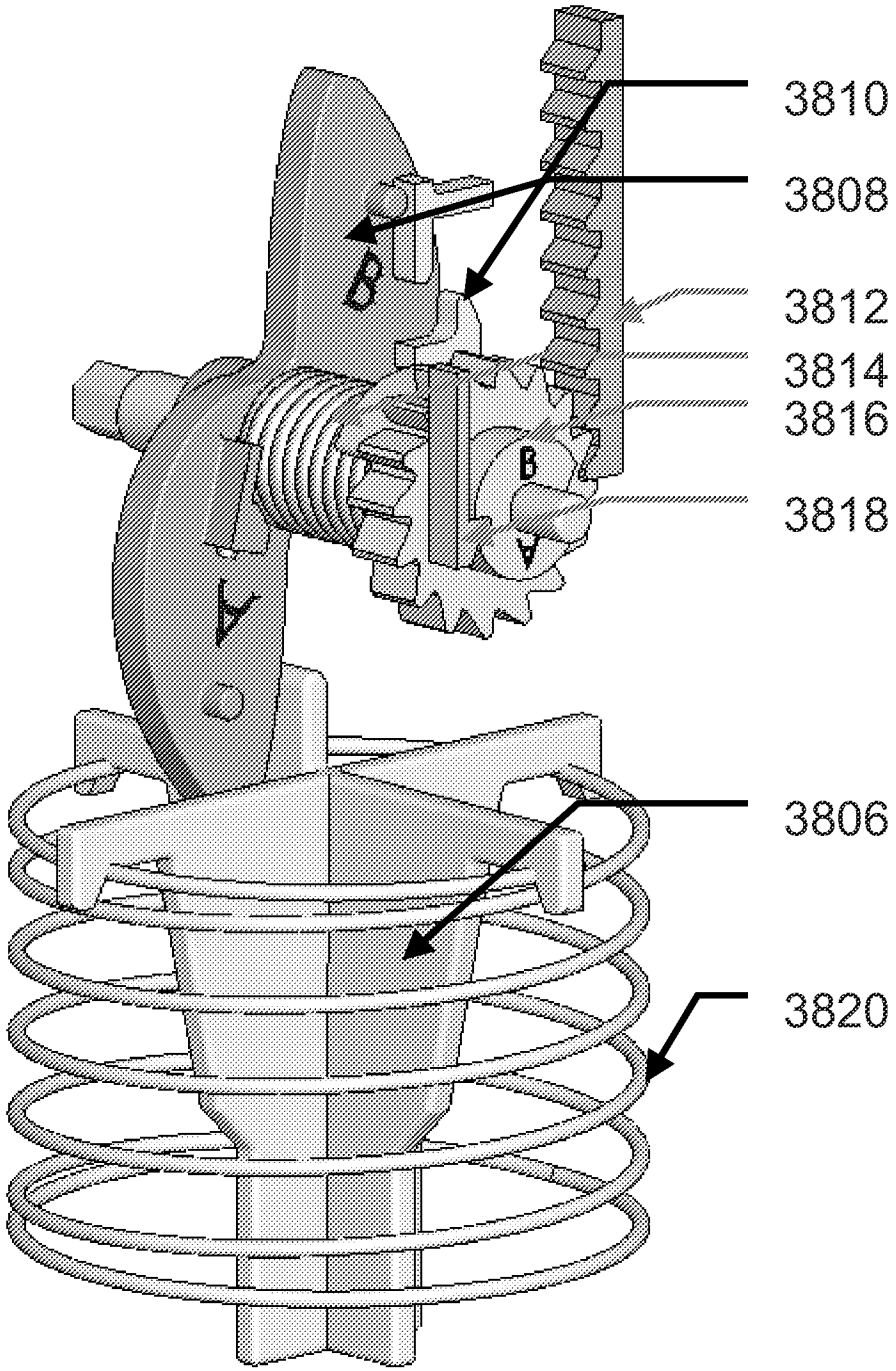

FIGURE 128J

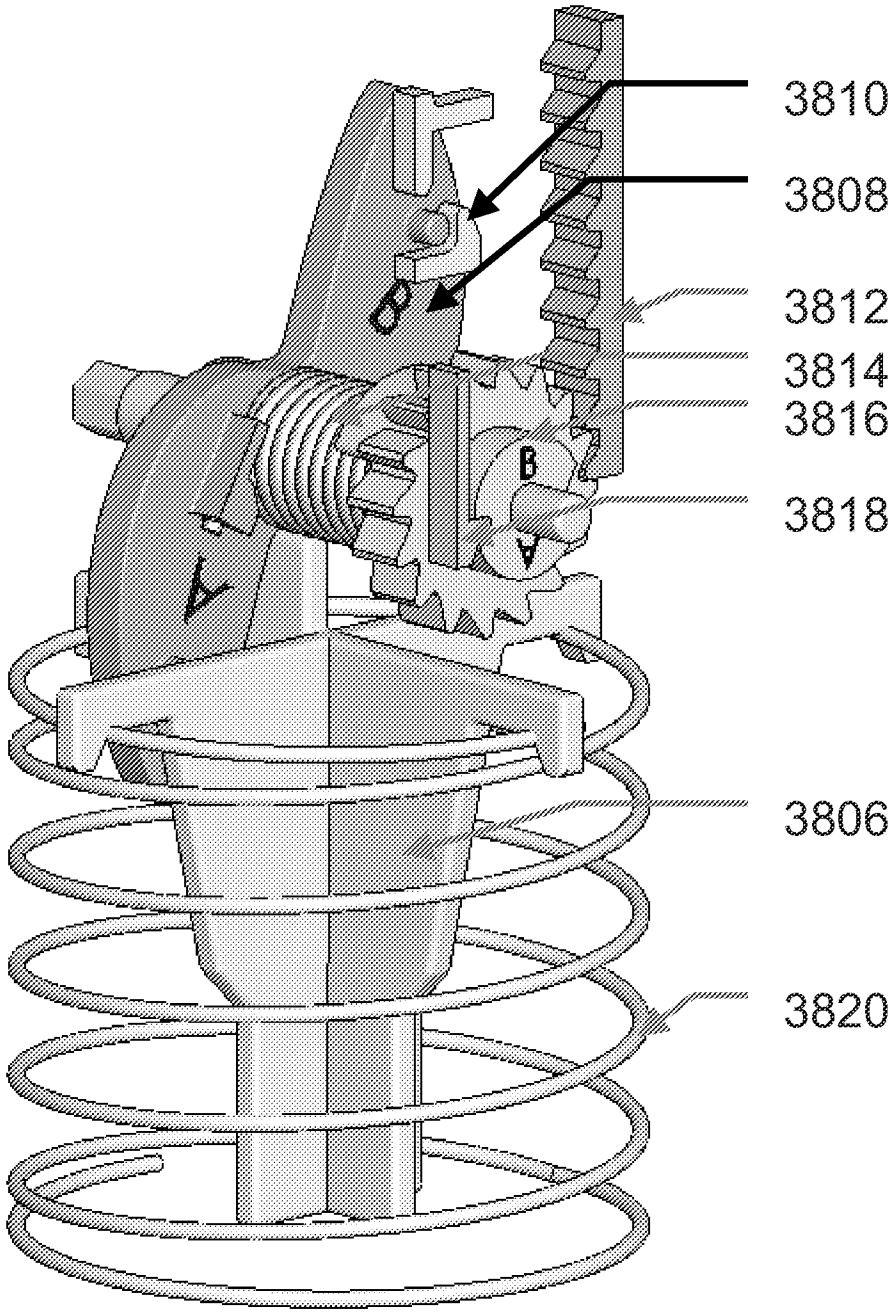

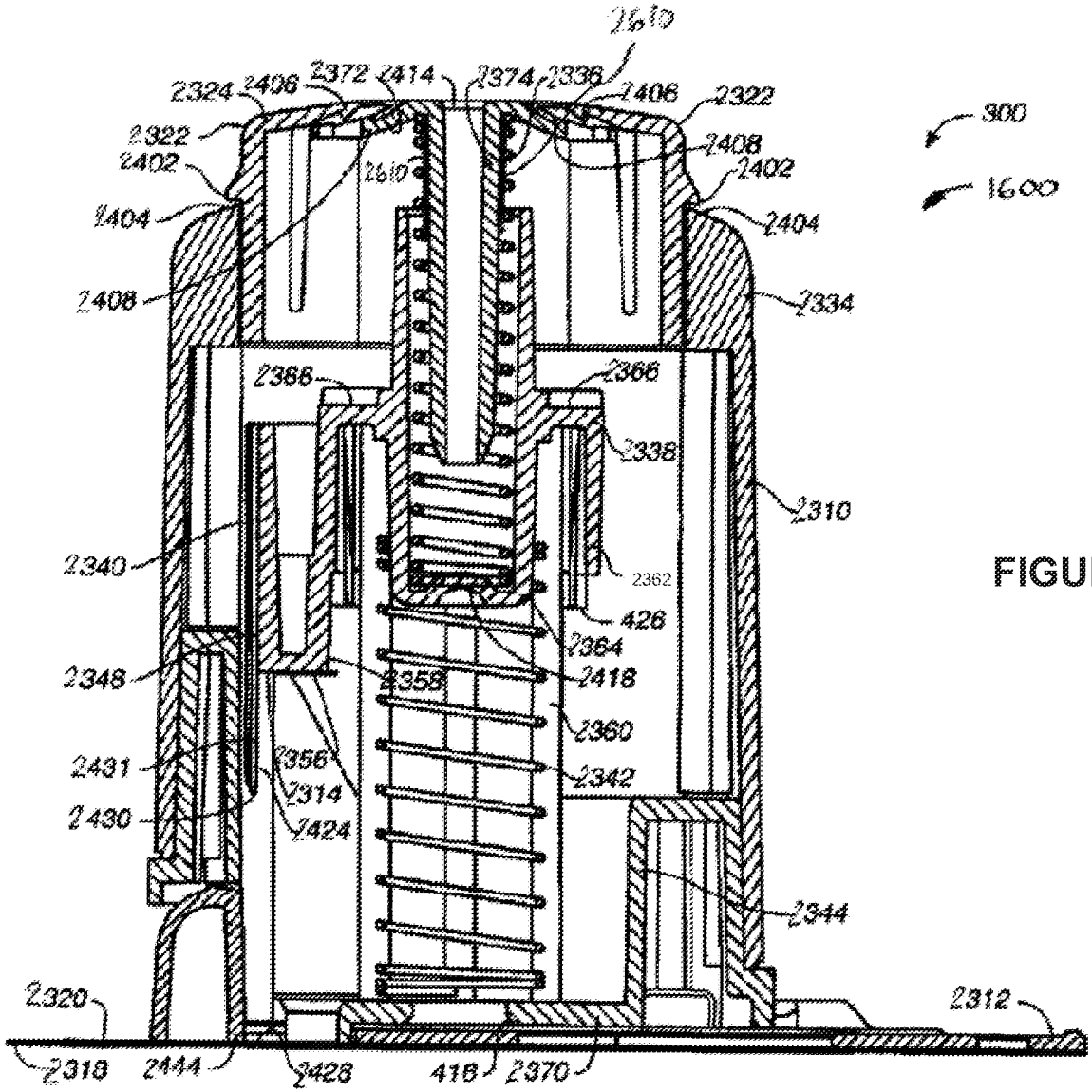
2610
2324
2406
2372
2414
2374
2336
2406
2322
300
2322
2408
2402
2610
2402
1600
2404
2404
2408
2334
2366
2366
2338
2310
2340
2362
426
2364
2348
2358
2418
2360
2431
2356
2342
2314
2430
2424
2344
2320
2312
2318
2444
2428
416
2370

FIGURE 107

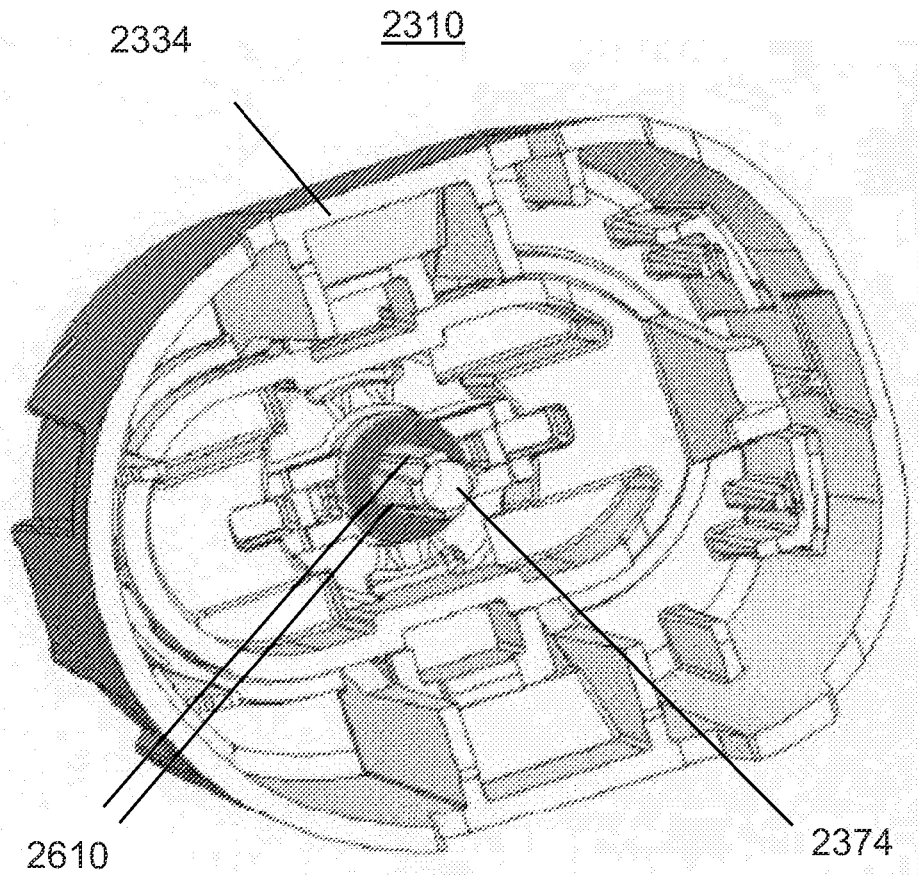

FIGURE 108

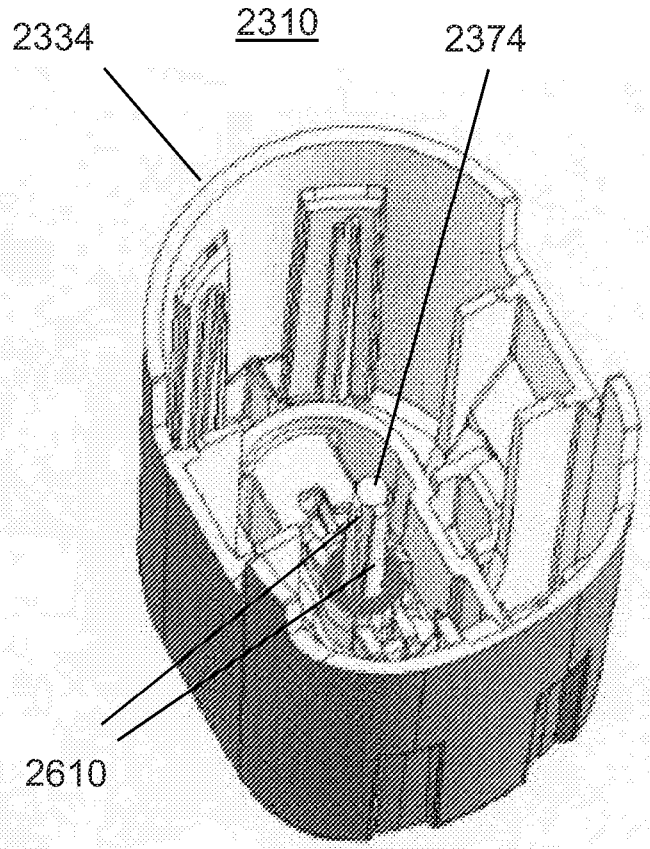

FIGURE 109

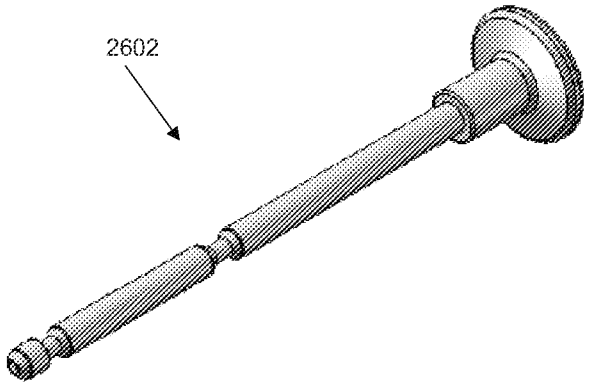

FIG. 110A

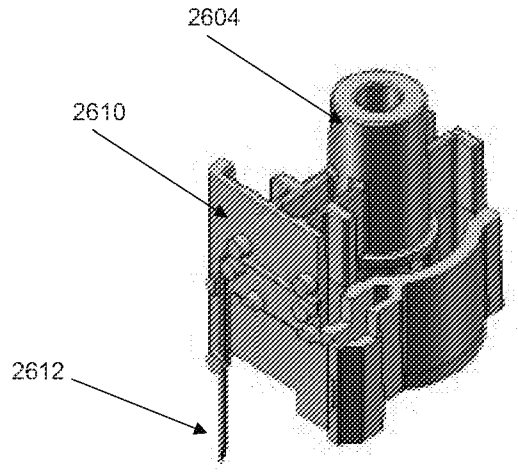

FIG. 110B

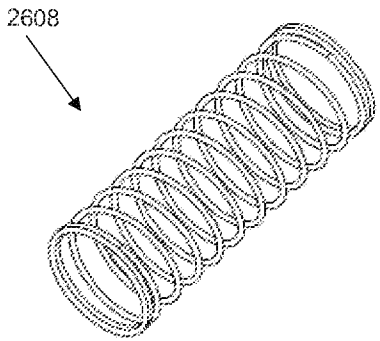

FIG. 110C

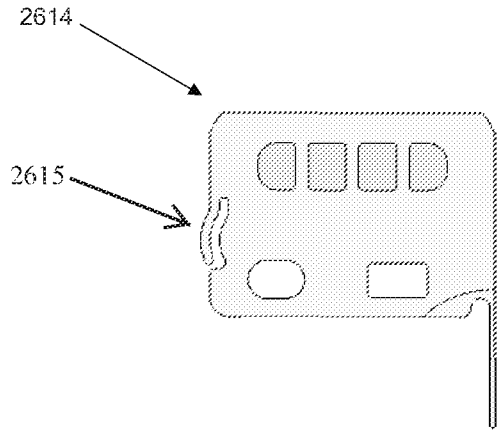

FIG. 110D

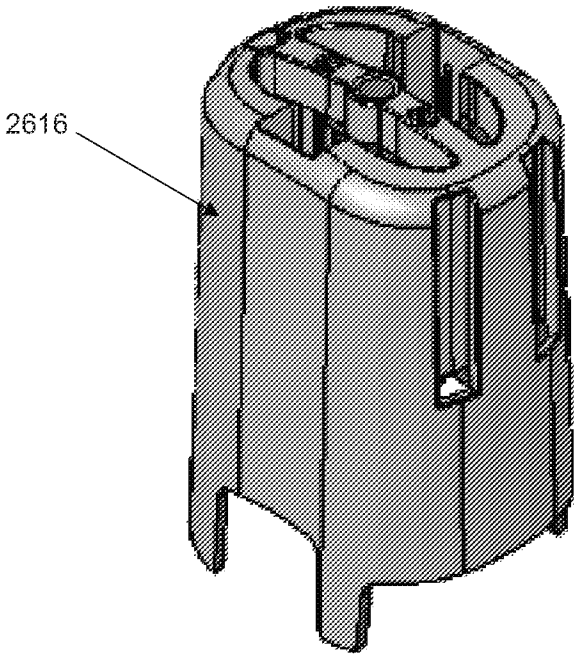

FIG. 110E

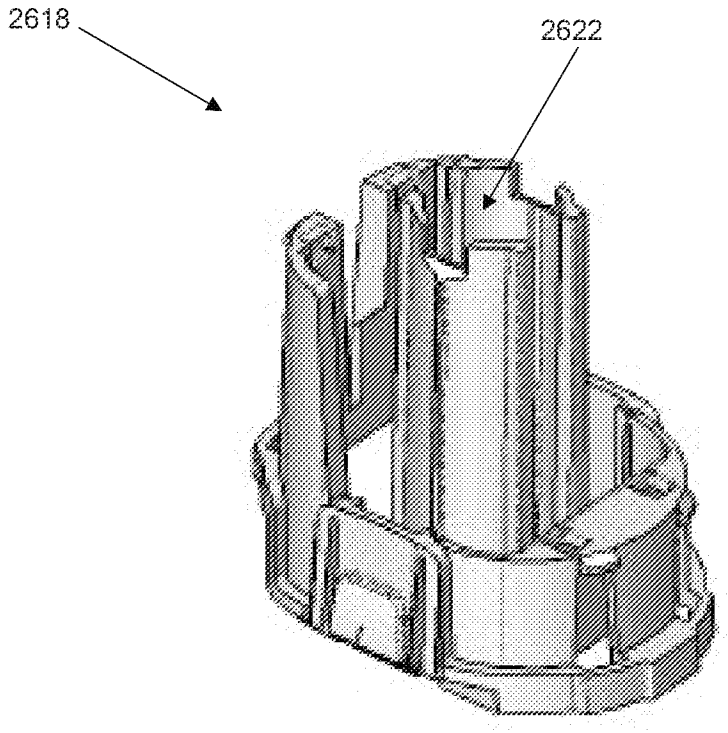

FIG. 110F

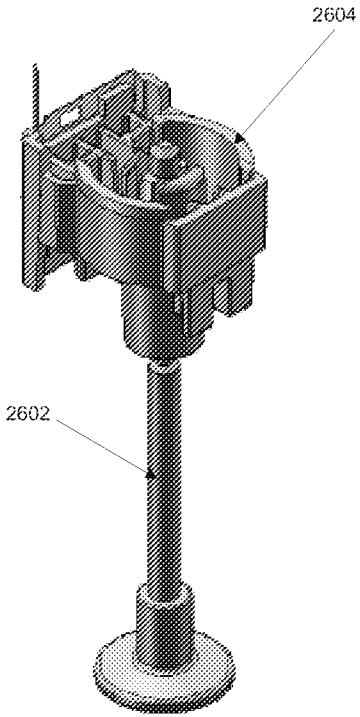

FIG. 111A

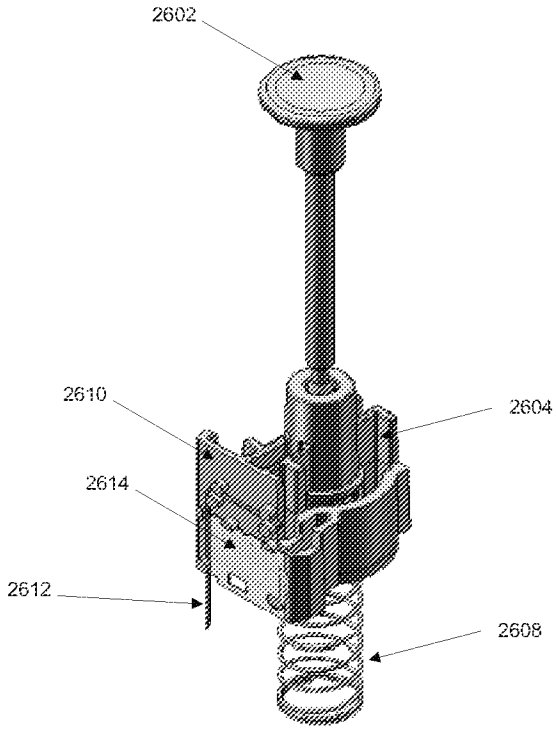

FIG. 111B

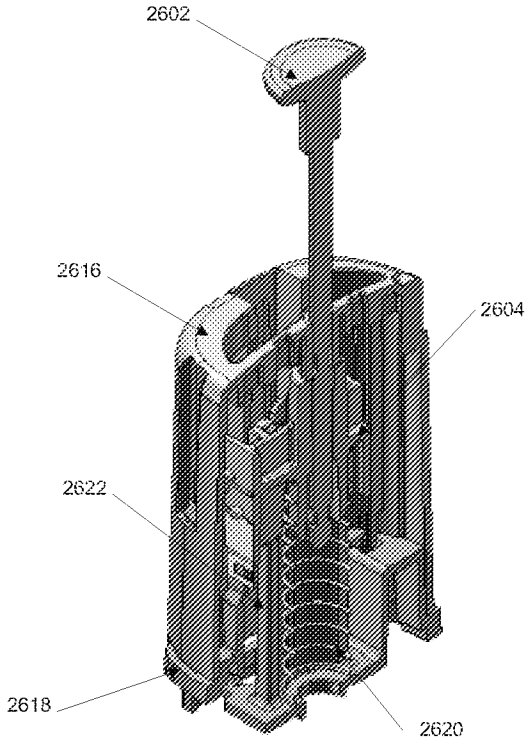

FIG. 111C

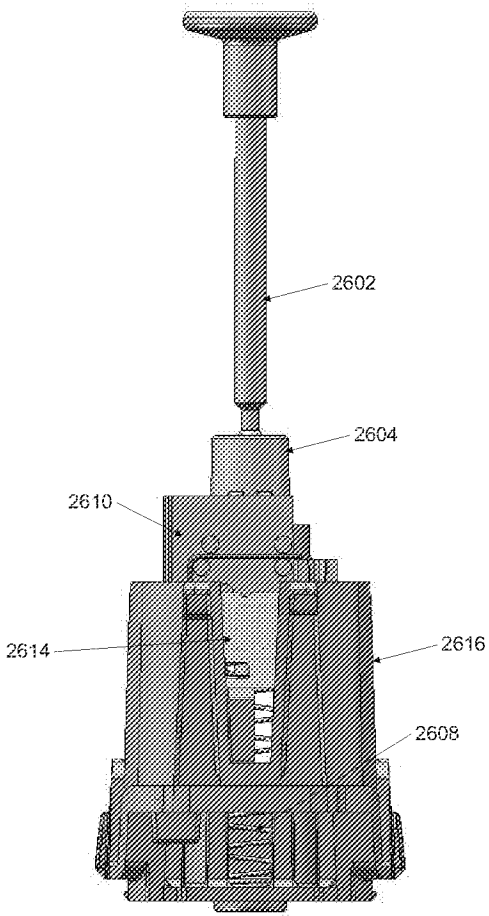

FIG. 112A

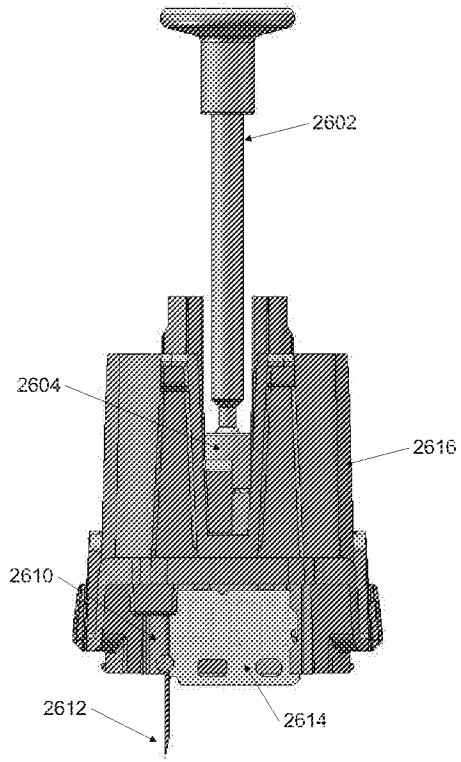

FIG. 112B

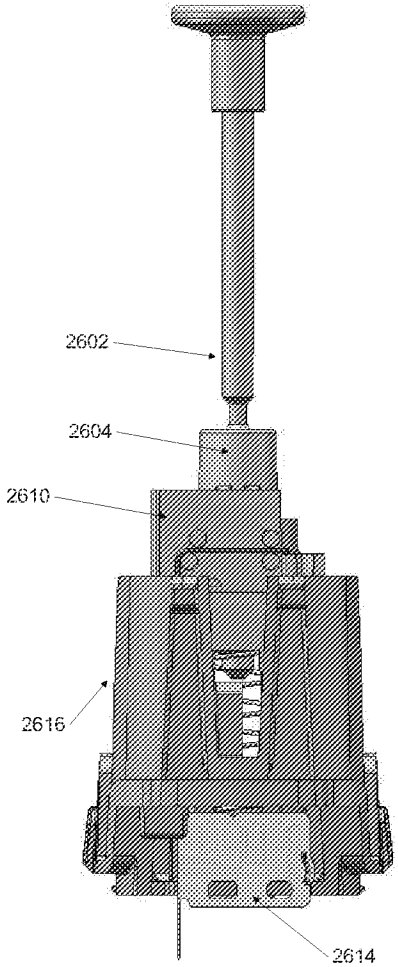

FIG. 112C

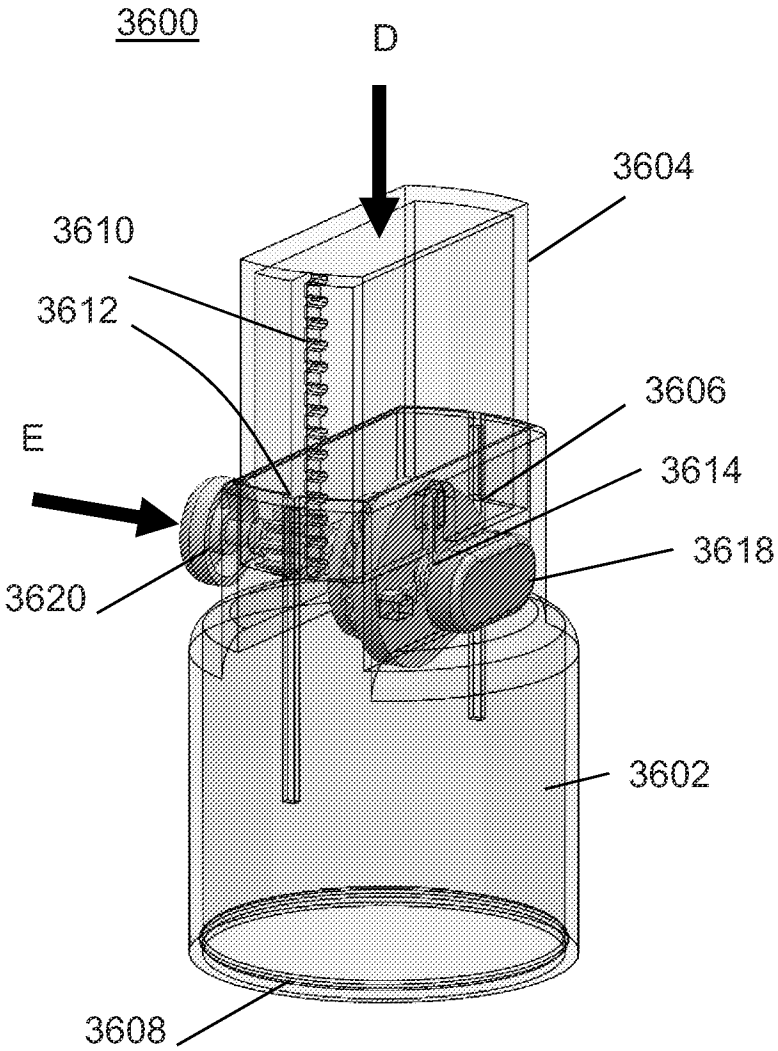

FIGURE 113

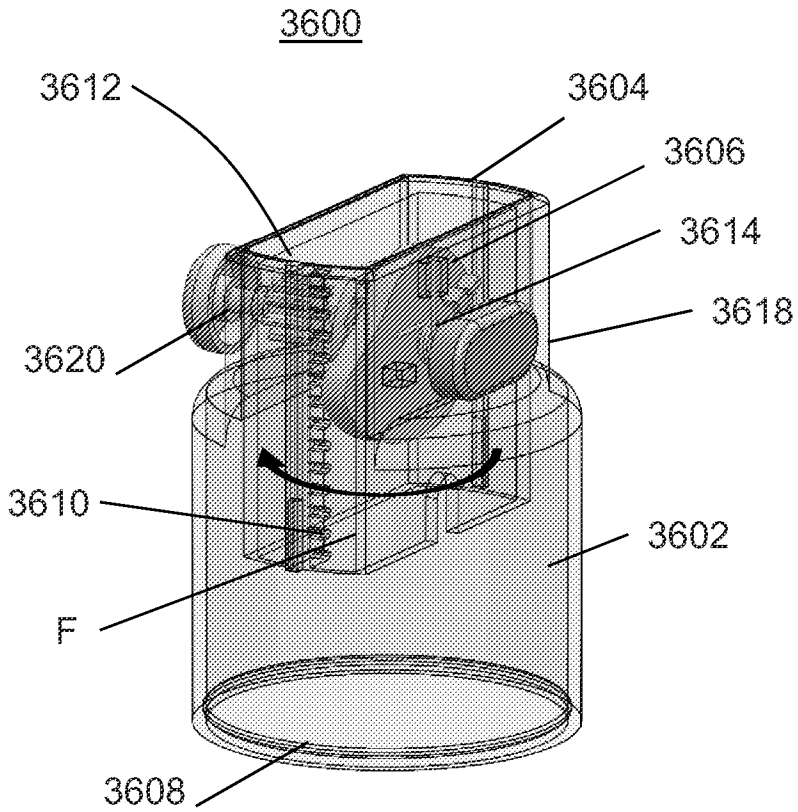

FIGURE 114

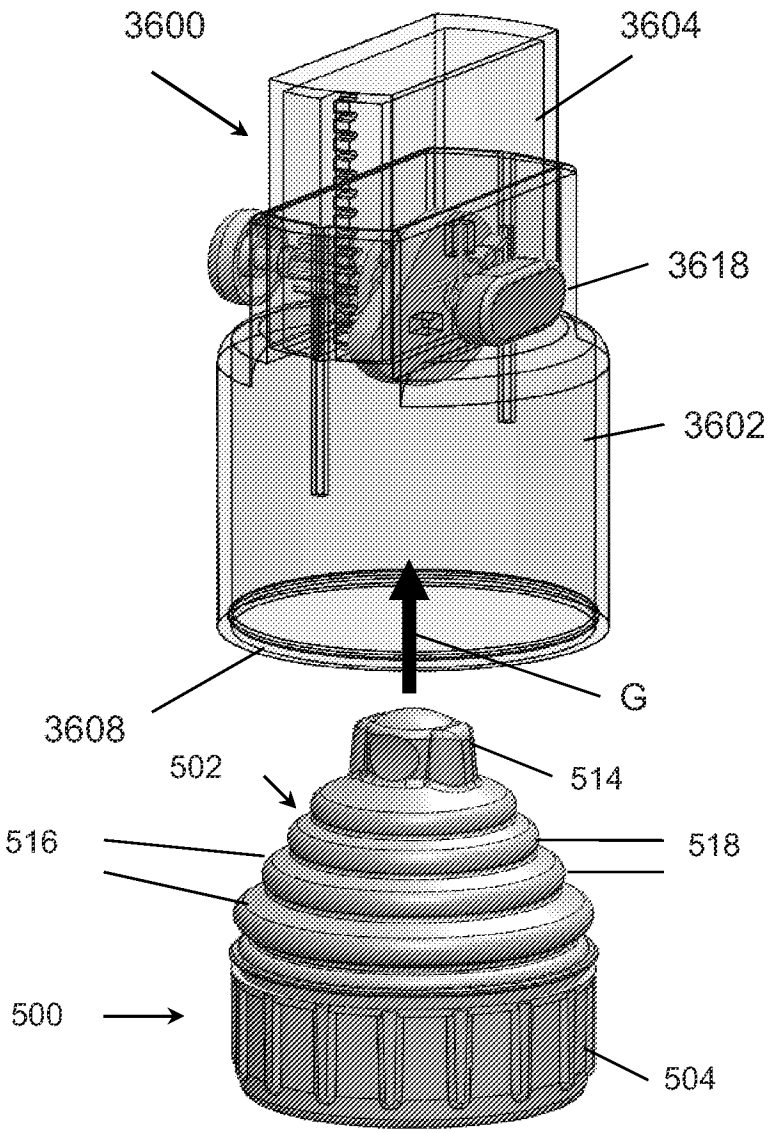

FIGURE 115

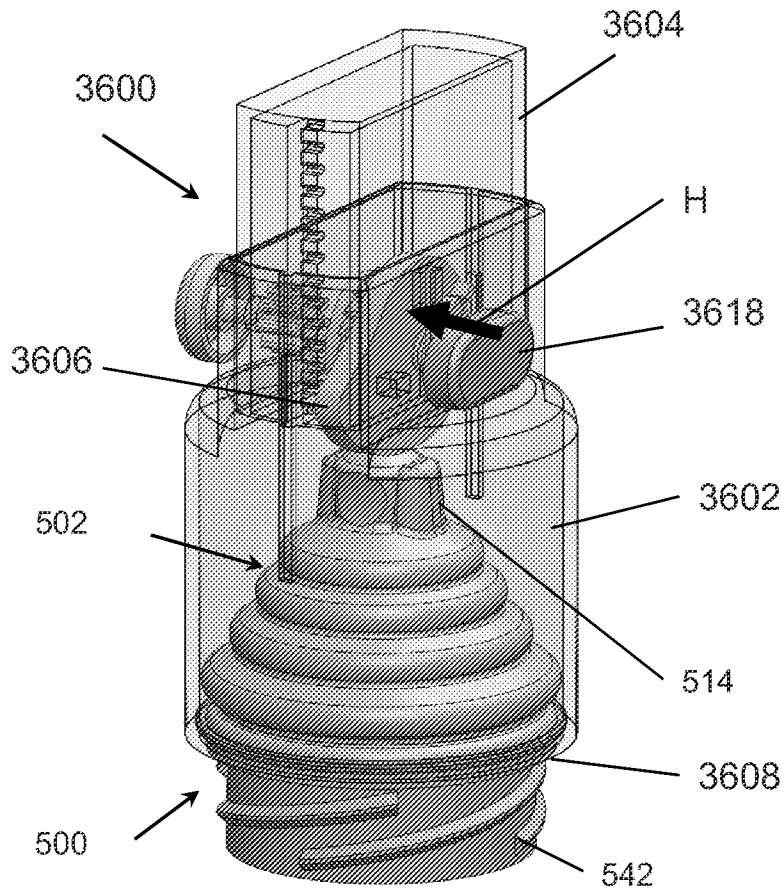

FIGURE 116

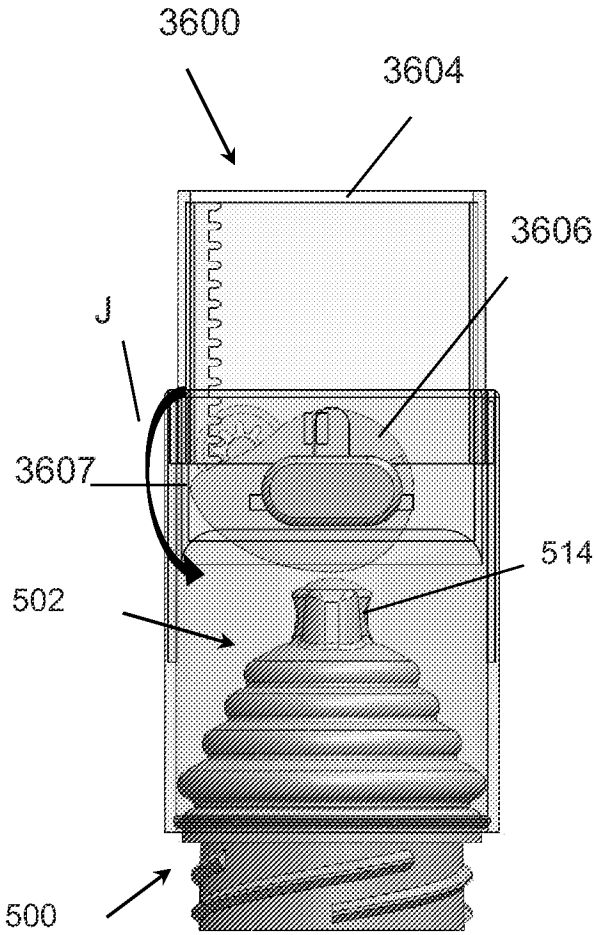

FIGURE 117

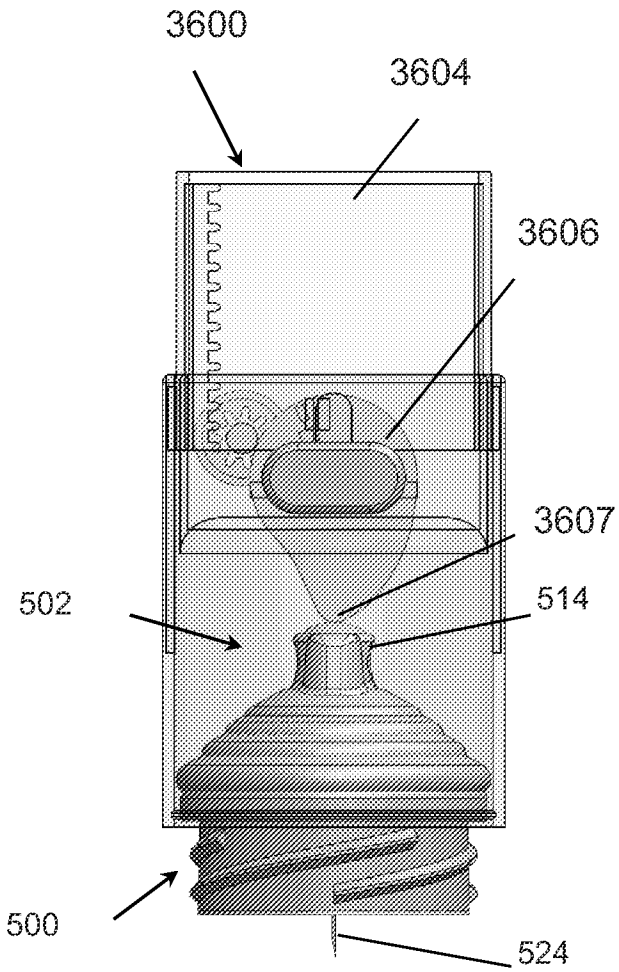

FIGURE 118

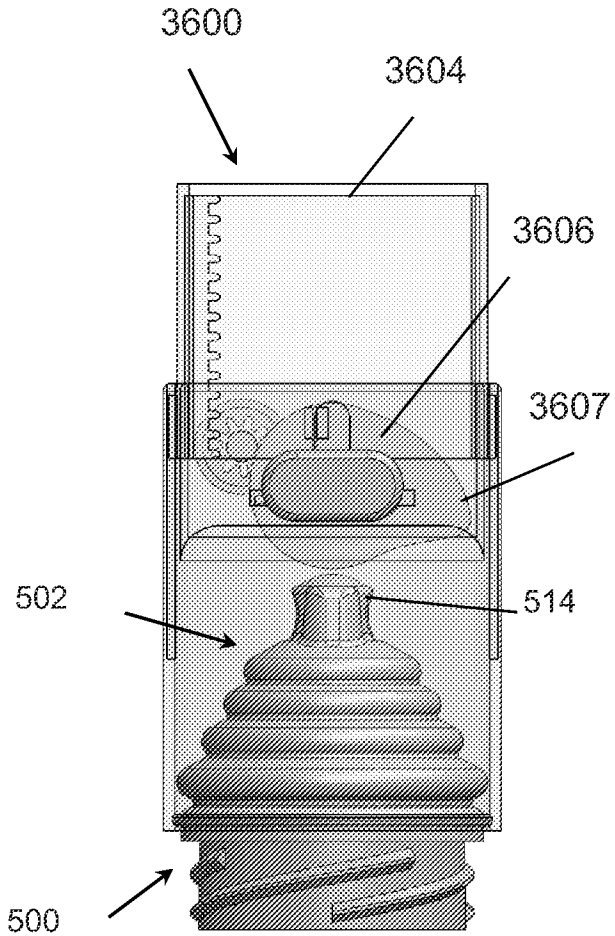

FIGURE 119

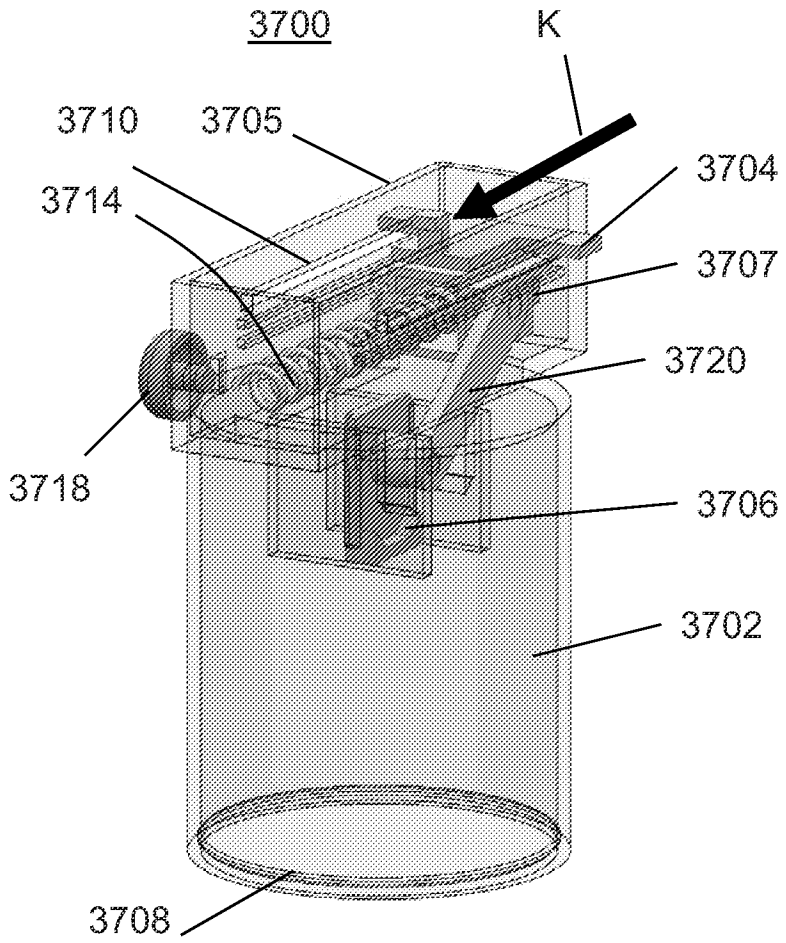

FIGURE 120

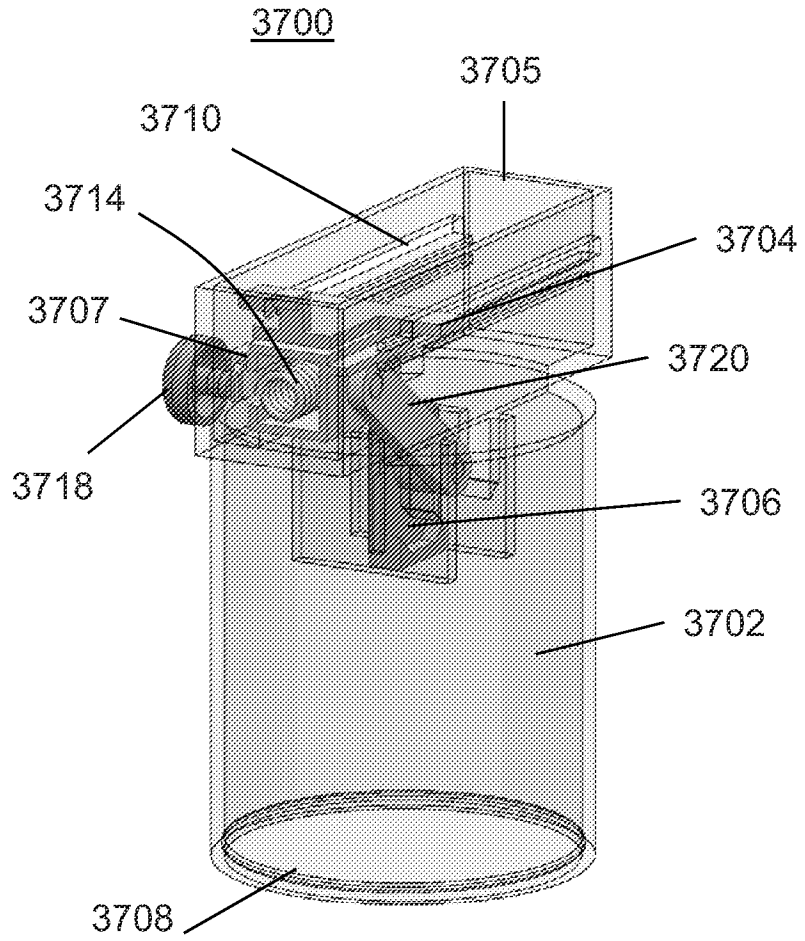

FIGURE 121

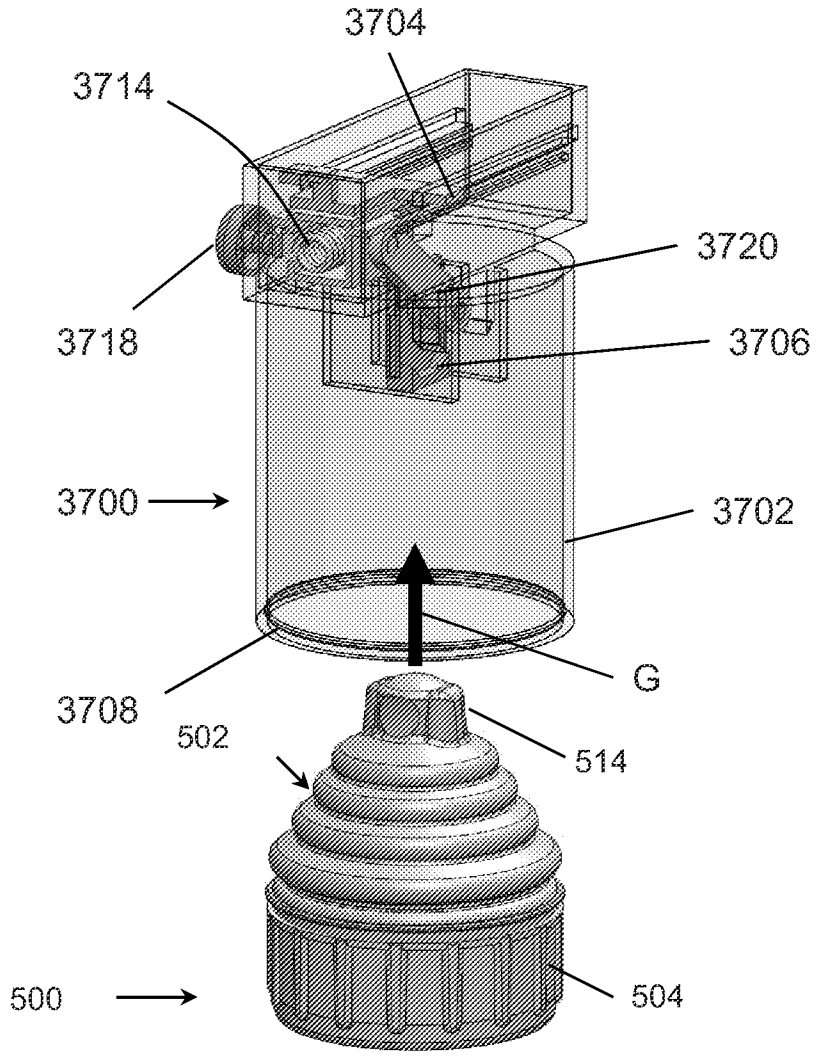

FIGURE 122

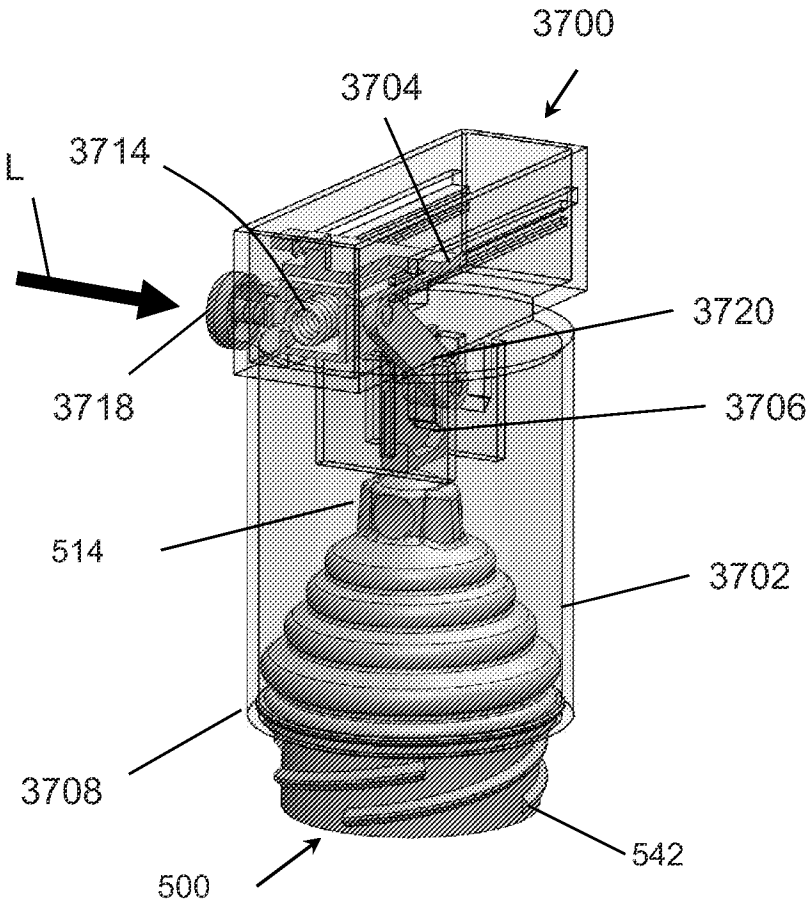

FIGURE 123

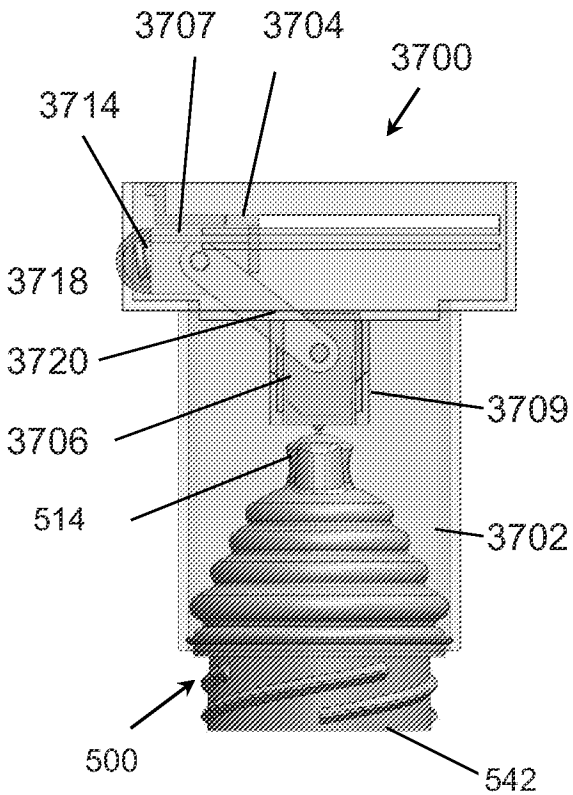

FIGURE 124

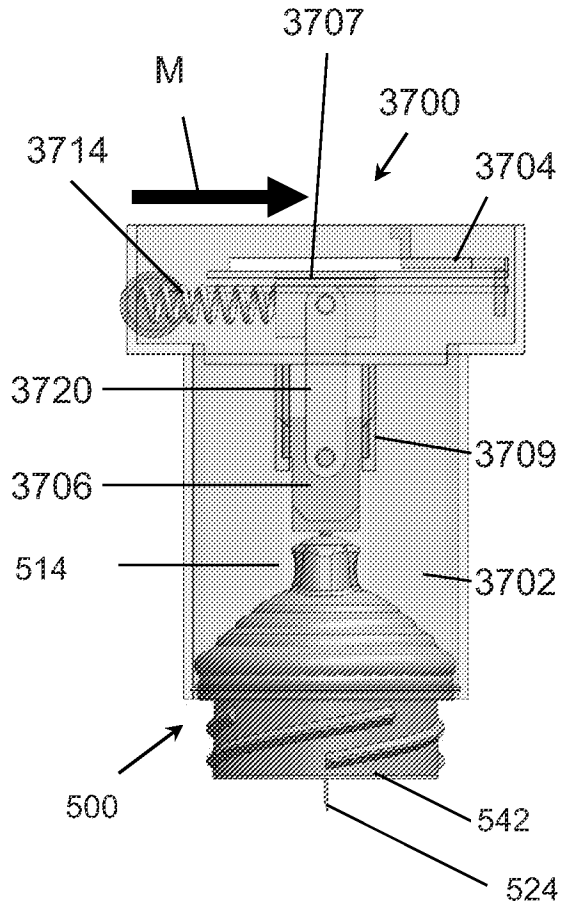

FIGURE 125

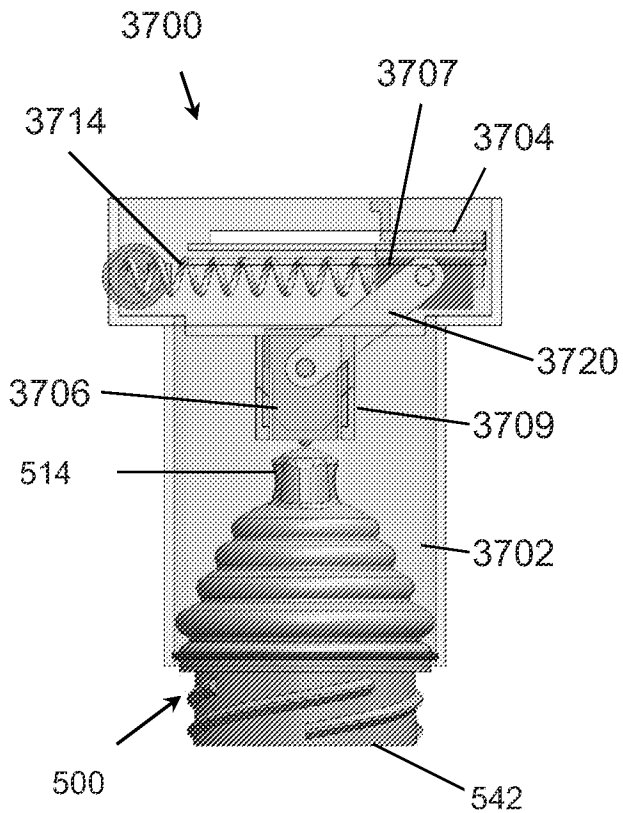

FIGURE 126

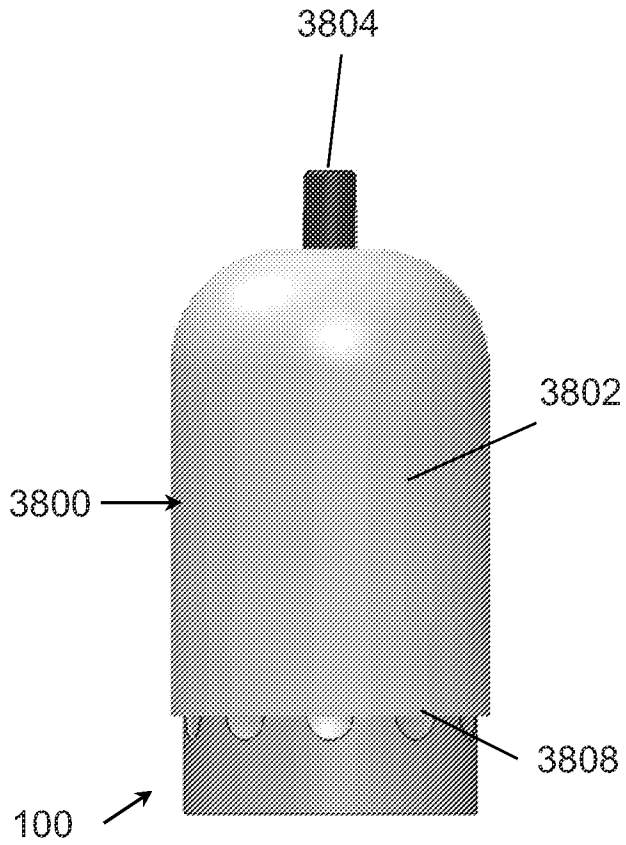

FIGURE 127

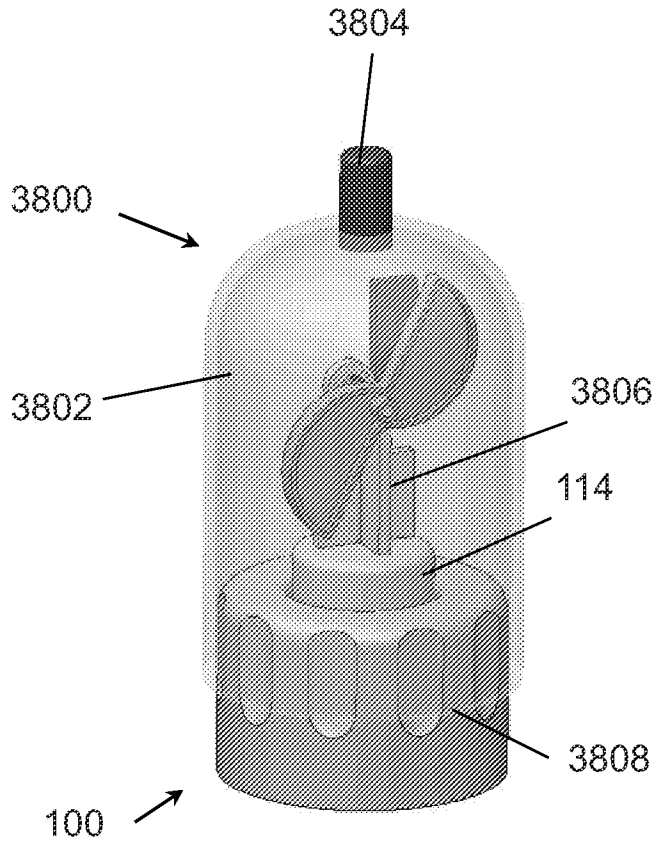

FIGURE 128

FIGURE 128A

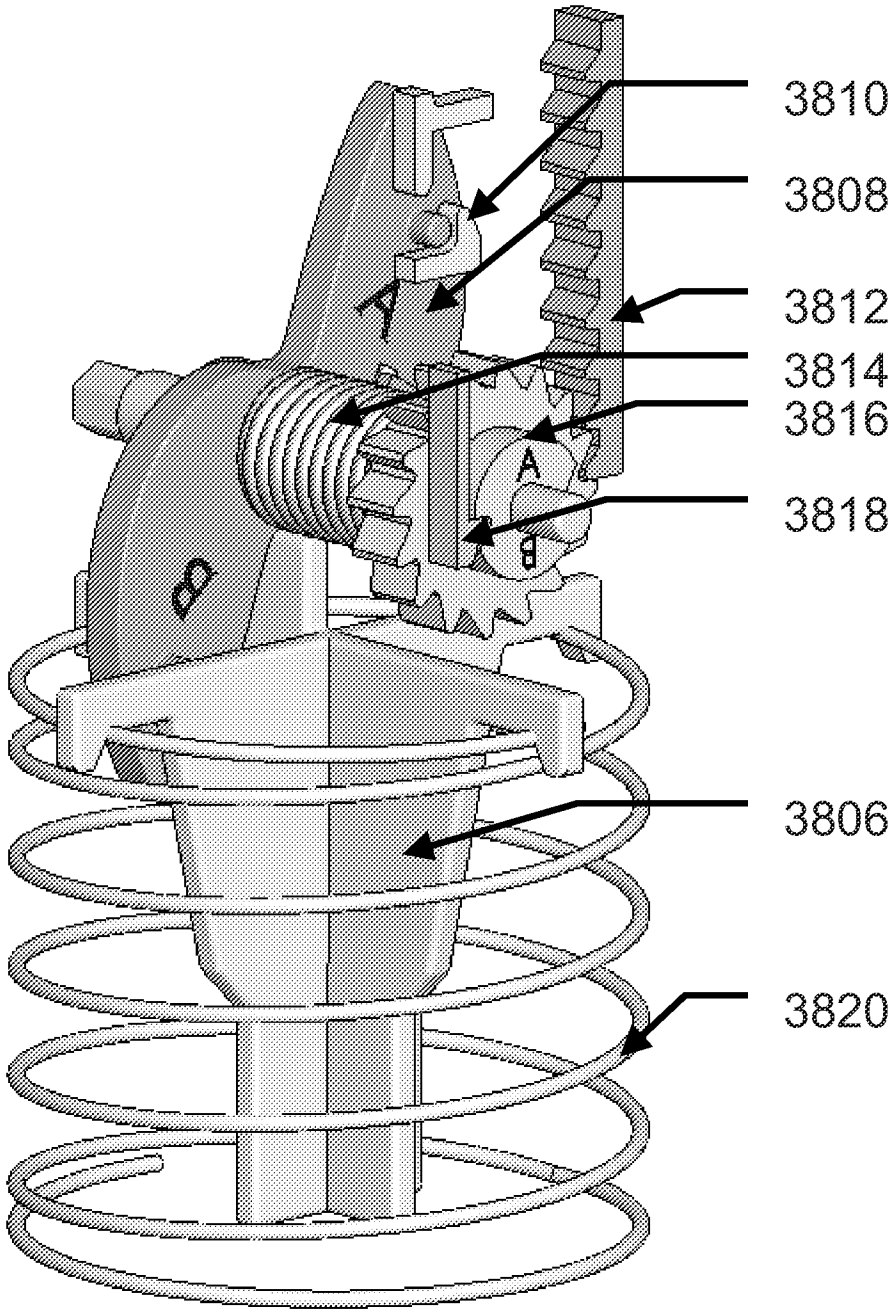

FIGURE 128B

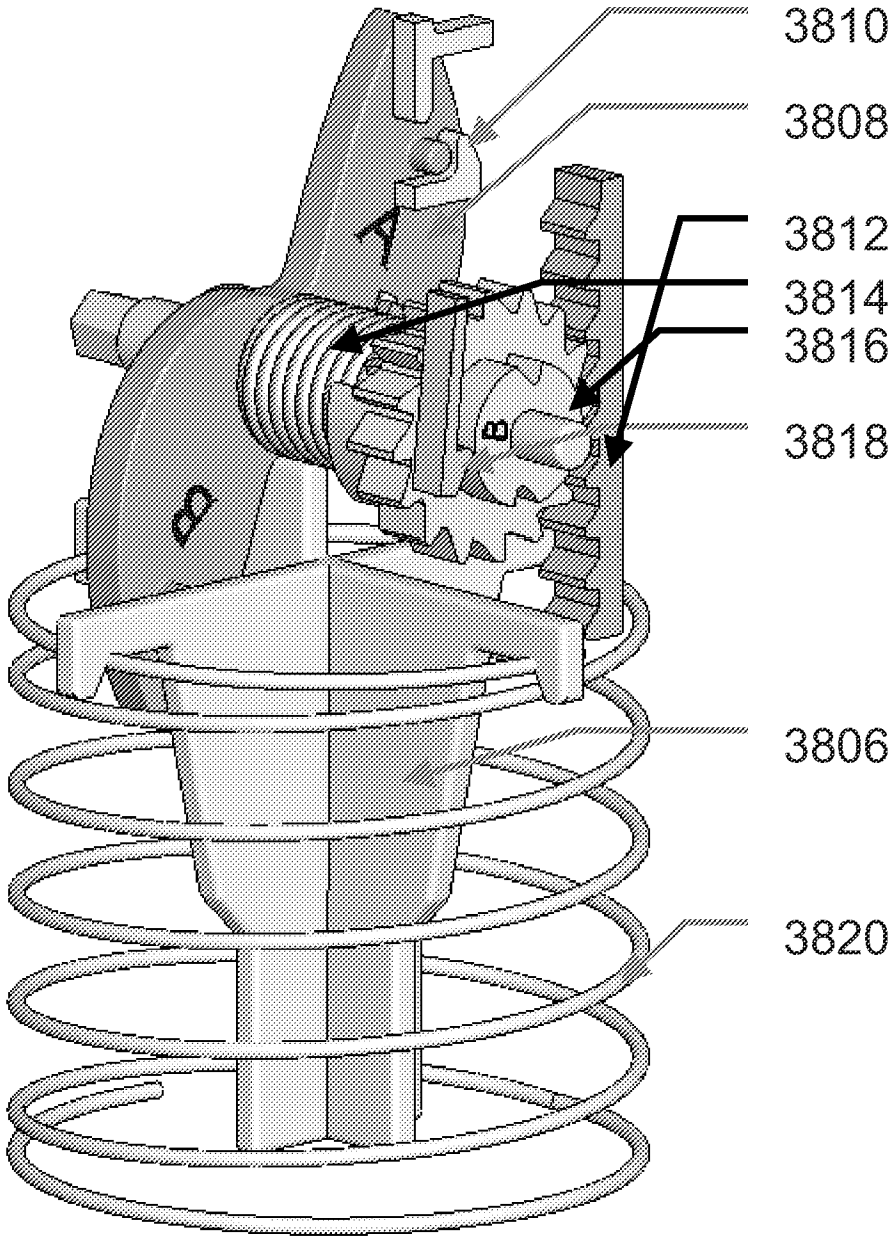

FIGURE 128C

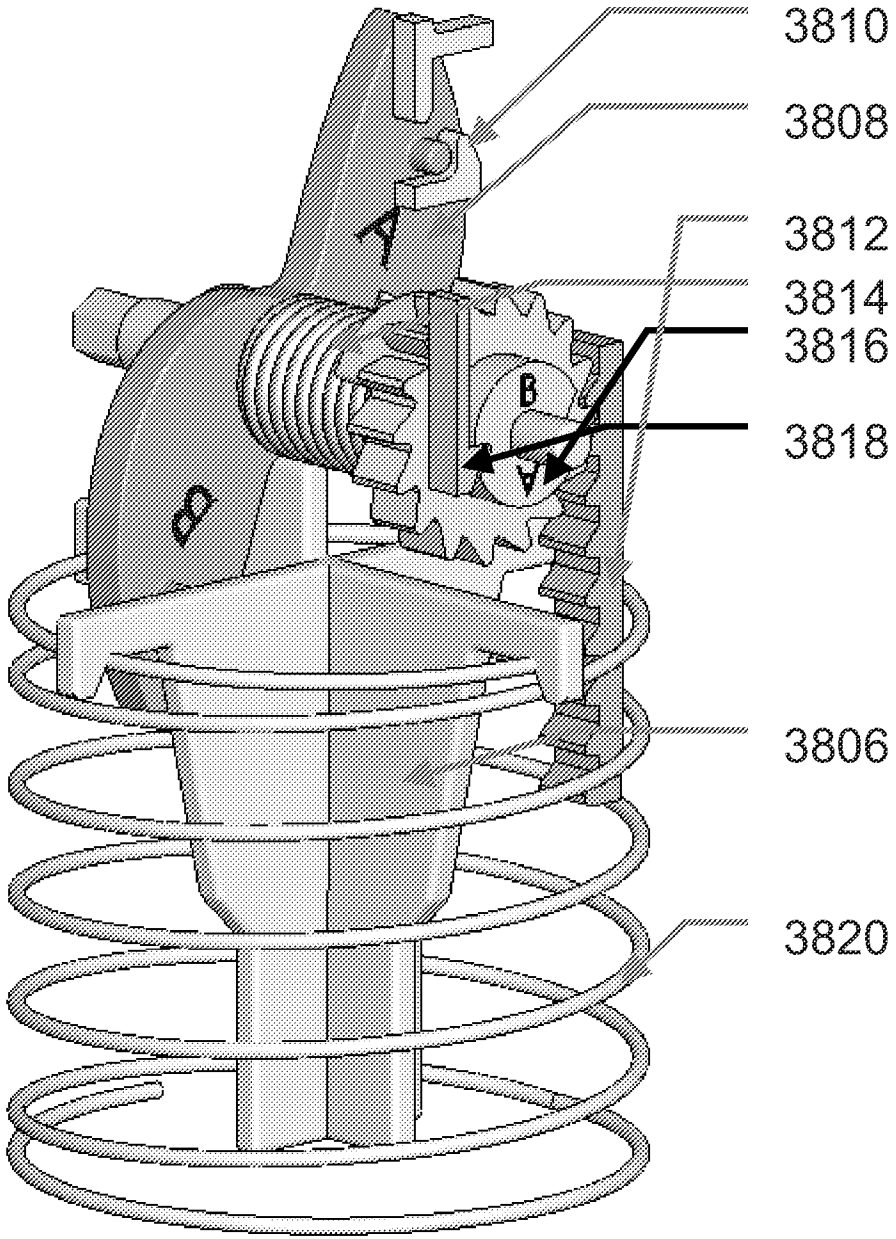

FIGURE 128D

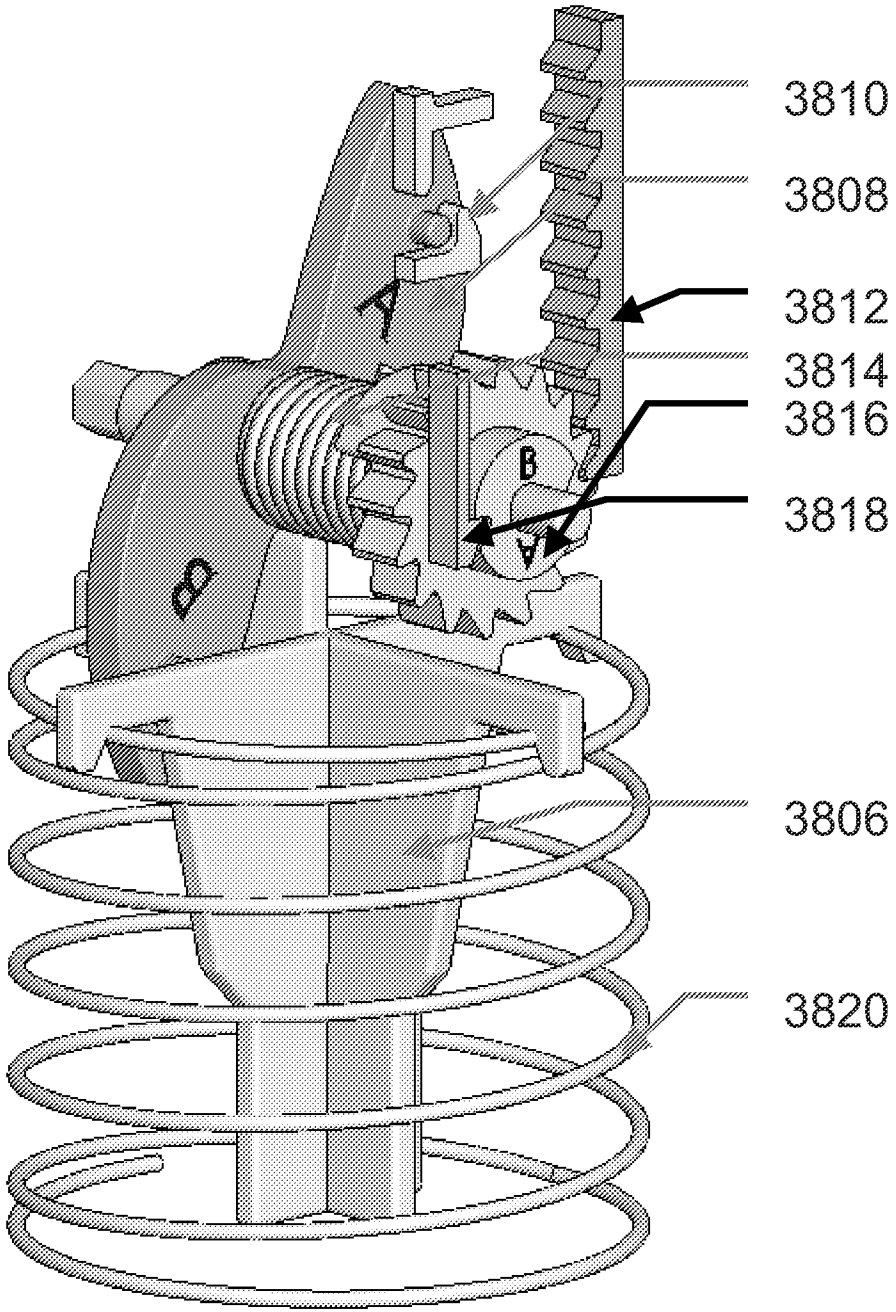

FIGURE 128E

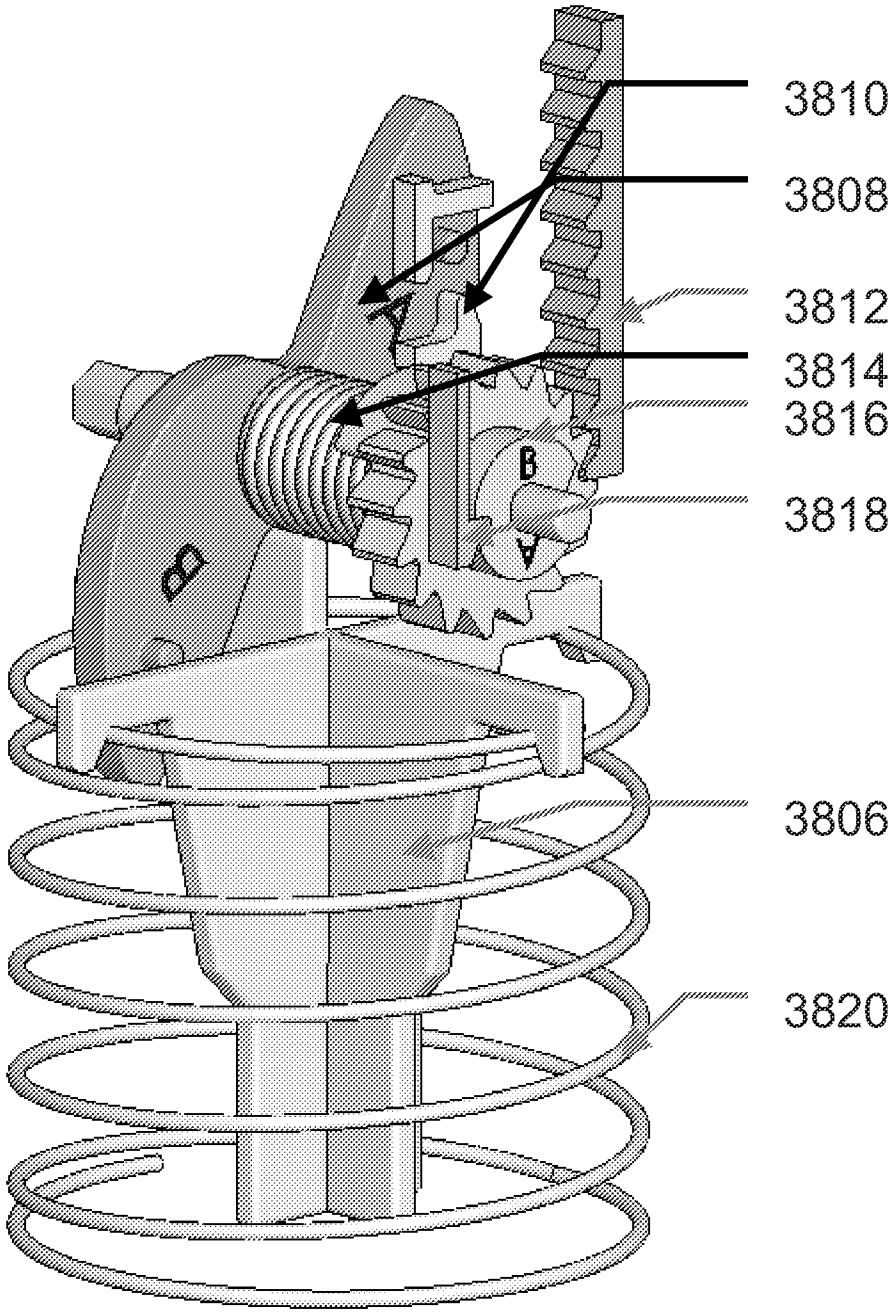

FIGURE 128F

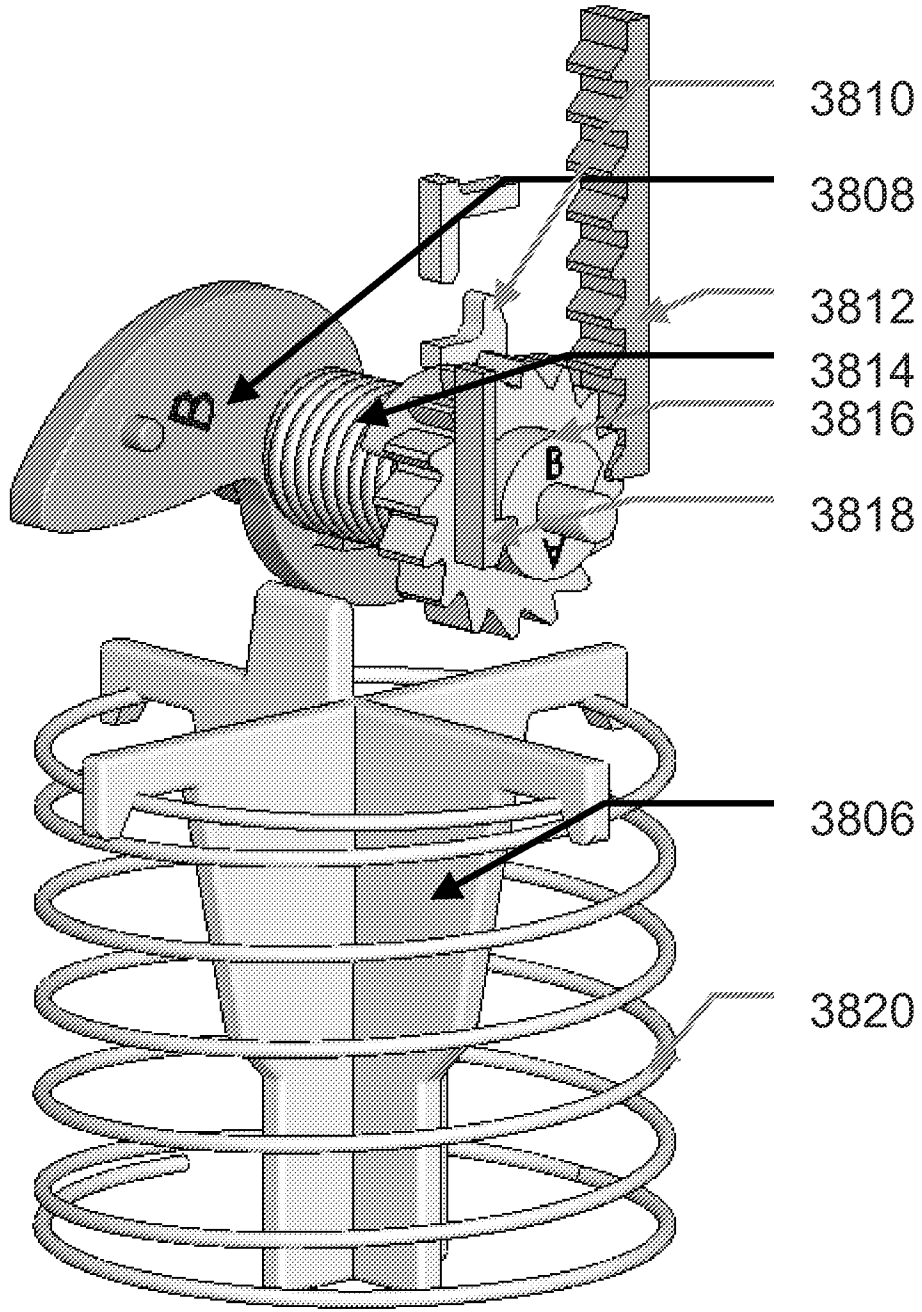

FIGURE 128G

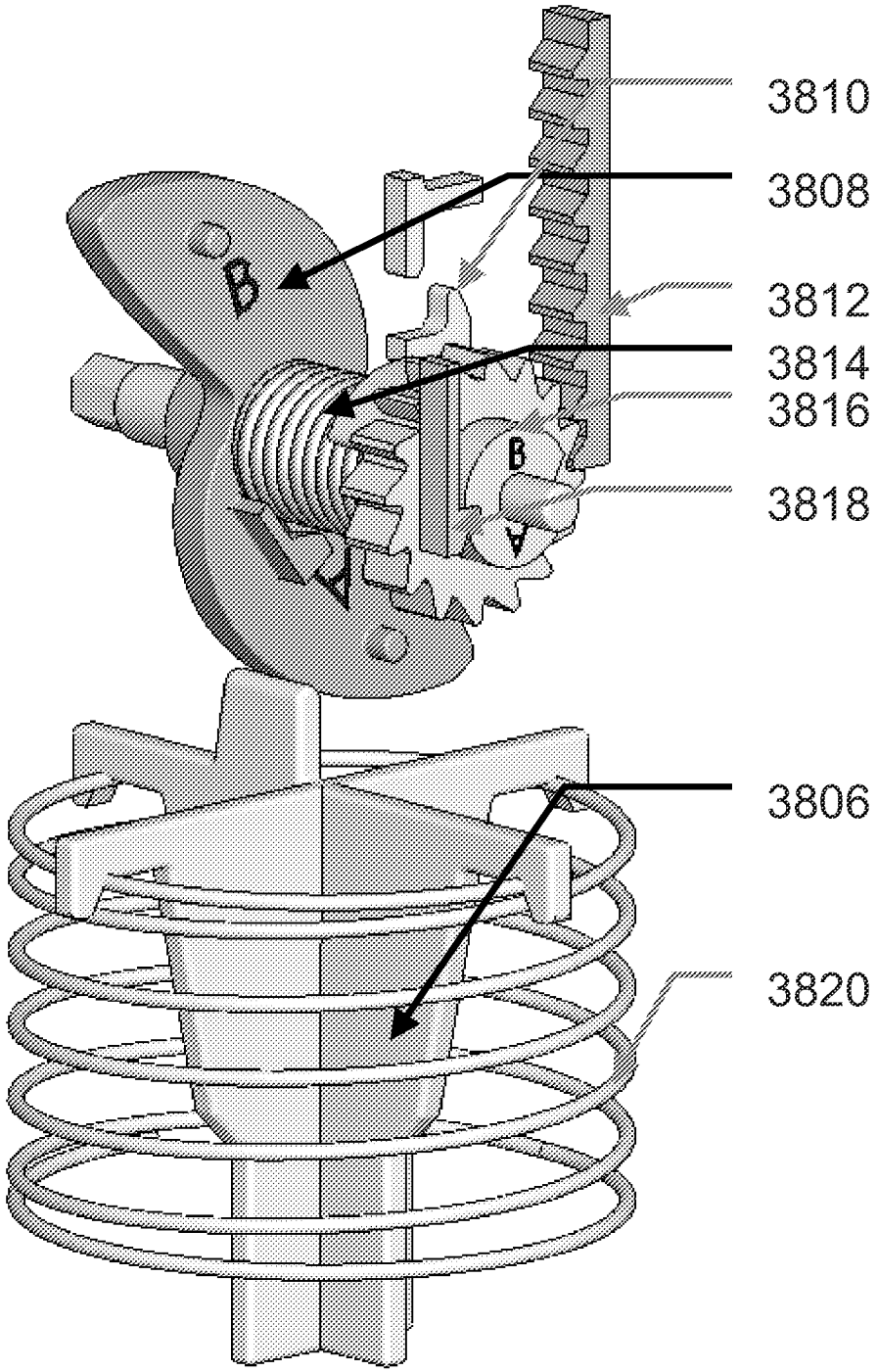

FIGURE 128H

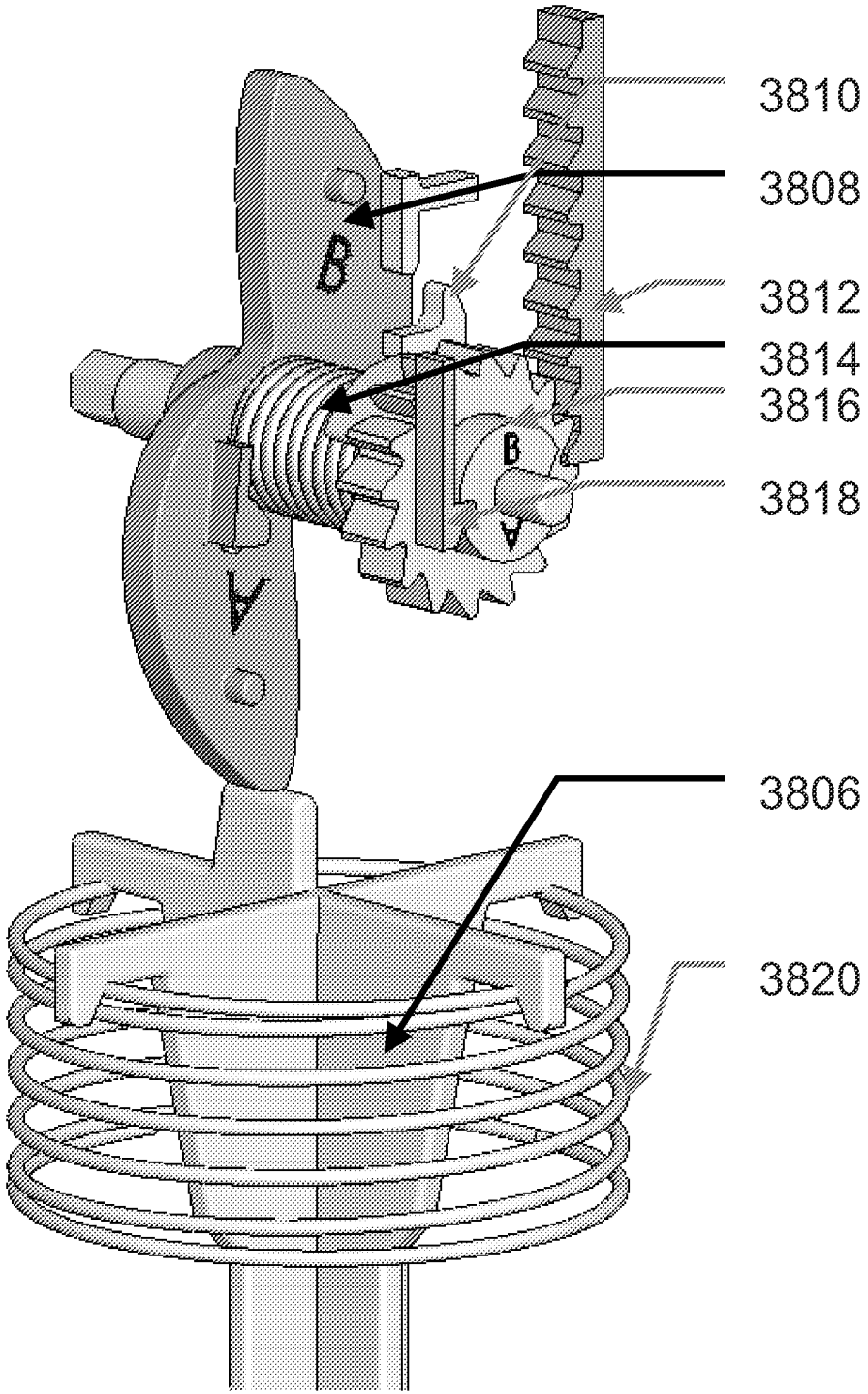

FIGURE 128I

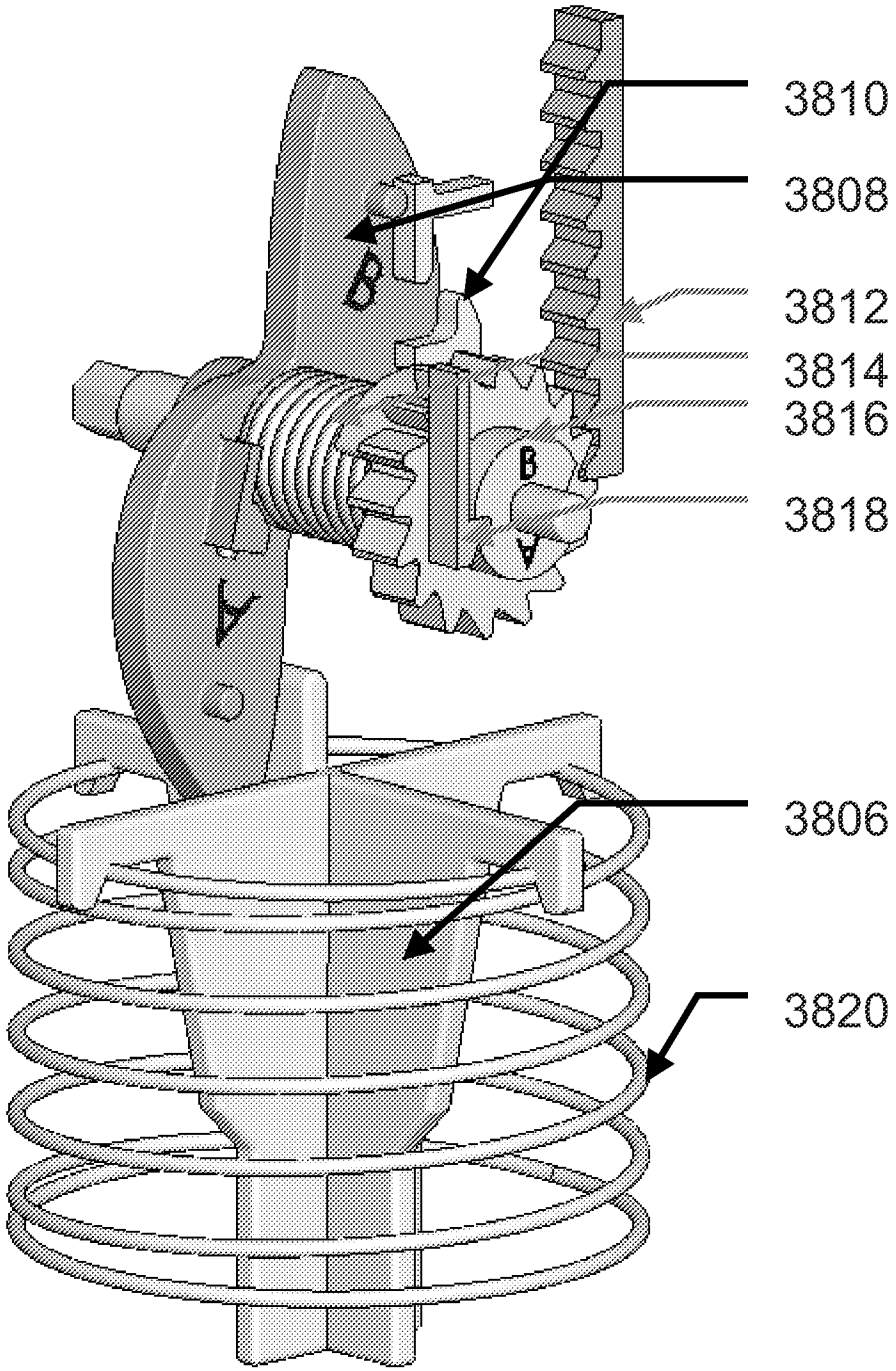

FIGURE 128J

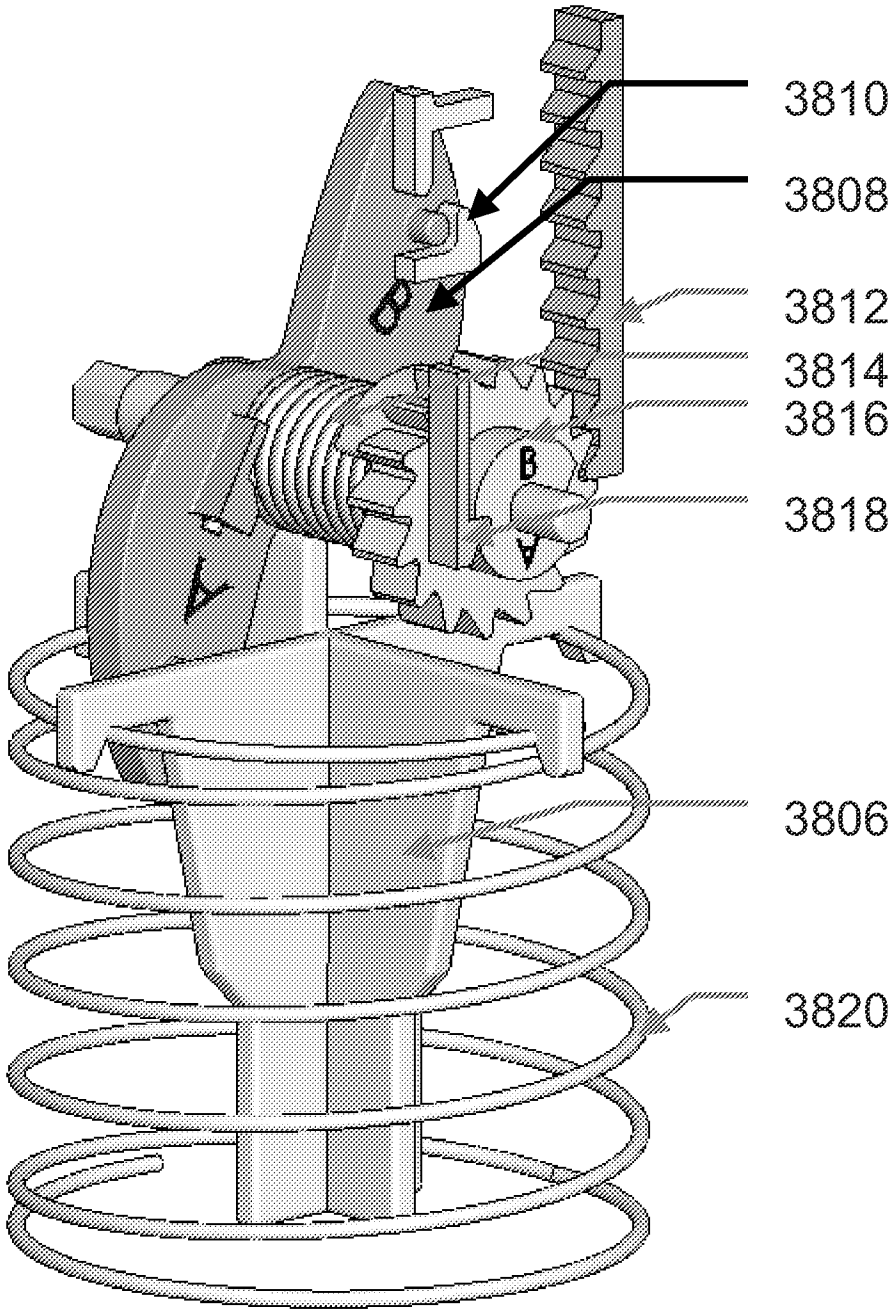

MEDICAL DEVICE INSERTERS AND PROCESSES OF INSERTING AND USING MEDICAL DEVICES

BACKGROUND OF THE INVENTION

[0001] Diabetes Mellitus is an incurable chronic disease in which the body does not produce or properly utilize insulin. Insulin is a hormone produced by the pancreas that regulates blood sugar (glucose). In particular, when blood sugar levels rise, *e.g.*, after a meal, insulin lowers the blood sugar levels by facilitating blood glucose to move from the blood into the body cells. Thus, when the pancreas does not produce sufficient insulin (a condition known as Type 1 Diabetes) or does not properly utilize insulin (a condition known as Type 2 Diabetes), the blood glucose remains in the blood, resulting in hyperglycemia or abnormally high blood sugar levels.

[0002] The fluctuations in blood glucose levels in people suffering from diabetes cause long-term, serious complications. Some of these complications include blindness, kidney failure, and nerve damage. Additionally, it is known that diabetes is a factor in accelerating cardiovascular diseases such as atherosclerosis (hardening of the arteries), leading to stroke, coronary heart disease, and other diseases. Accordingly, one important and universal strategy in managing diabetes is to control blood glucose levels.

[0003] One way to manage blood glucose levels is testing and monitoring blood glucose levels by using conventional *in vitro* techniques, such as drawing blood samples, applying the blood to a test strip, and determining the blood glucose level using colorimetric, electrochemical, or photometric test meters. Another more recent technique for monitoring blood glucose levels is by using an *in vivo* glucose-monitoring system, that continuously and/or automatically tests glucose, such as, for example, the FreeStyle Navigator® Continuous Glucose Monitoring

System, manufactured by Abbott Diabetes Care, Inc. Unlike conventional blood glucose meters, continuous analyte-monitoring systems employ a sensor at least a portion of which is positioned in a subject, which detects and monitors blood glucose levels. Prior to each use of a new sensor, the user self-inserts at least a portion of the sensor under his/her skin. An inserter assembly may be employed to insert the sensor in the body of the user. In this manner, an introducer sharp, while engaged to the sensor, pierces an opening into the skin of the user, releases the sensor, and is removed from the body of the user. Accordingly, there exists a need for an easy-to-use, simple, insertion assembly that is reliable, minimizes pain, and is easy to use.

SUMMARY

[0004] Sensors for detecting a physical parameter of a subject are disclosed herein. In some embodiments, a sensor is used to determine a level of analyte, such as, *e.g.*, glucose. Devices are disclosed for inserting a sensor into a subject, *e.g.*, at least partially beneath the skin of a subject. Sensor assemblies that include a medical device, such as a sensor and/or an infusion device, and a device to position at least a portion of the medical device are provided, as well as methods of positioning at least a portion of a medical device such as a sensor (*e.g.*, a glucose sensor) and/or an infusion device, and methods of using a positioned medical device, *e.g.*, methods for analyte testing are disclosed herein.

[0005] Sensor assembly embodiments include a housing adapted to adhere to the skin of a subject; an analyte sensor coupled or coupleable to the housing; and an insertion sharp having a longitudinal body including a longitudinal opening to receive at least a portion of the sensor.

[0006] In certain embodiments, the sensor includes a body having a proximal section and a distal section, and the distal section may be longitudinally (or otherwise) aligned with the

proximal section. Some sensor embodiments may include an intermediate section. An intermediate section, if present, may or may not be laterally displaced from at least the distal member, and a gap may be defined between the laterally displaced intermediate section and a portion of the distal section. A second gap may be defined in the sensor between the proximal section and the laterally displaced intermediate section. The proximal section of the sensor may have a substantially curved profile. A proximal section and a distal section of a given sensor may or may not be in axial alignment with respect to each other.

[0007] In some embodiments, the distal section of the sensor body is received in the longitudinally defined opening of the insertion sharp. A gap may be defined between the distal section and the laterally displaced intermediate section, which allows the distal section, in some embodiments a substantial portion – – including the entirety of the distal section – – to be received in the longitudinal opening of the insertion needle. The intermediate section and the proximal section may be proximate the distal section received in the insertion needle.

[0008] In some embodiments, the proximal section of the sensor may be disposed in a horizontal plane, and the distal section of the sensor body may be disposed in a vertical plane, at least during a sensing operation. In some embodiments, the sensor is configured for insertion in a soft tissue of a user. In some embodiments, the sensor is a glucose sensor.

[0009] Embodiments include sensor assemblies which include a sensor including a portion for operative contact with a fluid of the subject; a housing defining a distal surface adapted for attachment to the skin of a subject and housing a circuit coupled to sensor for performing a function with the sensor. In some embodiments, the sensor is integrated with the circuit within the housing to define an on-body device such as a single-unit on-body device. In some

embodiments, a switch is provided at least partially disposed in the housing and having a member defining a first position which protrudes from the distal surface of the mount and a second position which is recessed in the mount, the member configured to activate the circuit when in the second position.

[0010] In some embodiments, the member is biased in the first position. The member may include an elongated member disposed in an opening in the mount. In some embodiments, the member is moved from the first position to the second position when the mount contacts the skin of the subject. In some embodiments, an adhesive layer is disposed on the skin of the subject, and wherein the member is moved from the first position to the second position when the mount contacts the adhesive layer.

[0011] In some embodiments, the switch activates the circuit upon the member reaching the second position. In some embodiments, the switch activates the circuit as long as the member is maintained in the second position. In some embodiments, the sensor is a glucose sensor.

[0012] In some embodiments, the circuit applies a potential to the sensor. In some embodiments, the circuit applies a current to the sensor.

[0013] Embodiments include apparatuses for inserting medical devices at least partially through the skin of a subject. An insertion apparatus may include a sheath defining a distal surface for placement on the skin of the subject; a handle movable between a proximal position and distal position relative to the sheath; a device support for supporting the medical device and defining an aperture therethrough; a sharp support for supporting a sharp extending through said aperture and coupled to the handle; and a driver for biasing the handle and the sharp support towards the proximal position.

[0014] In some embodiments, the driver includes a compression member such as a compression spring. In some embodiments, the handle is at least partially disposed within the sheath. In some embodiments, the handle is at least partially disposed surrounding the sheath. In some embodiments, a bellows portion is provided which is disposed between the handle and the sheath.

[0015] In some embodiments, the sharp support is permanently fixed to the handle. In some embodiments, the device support is permanently affixed to the handle.

[0016] In some embodiments, a stop portion for retaining the device support in the distal position is included. In some embodiments, the device support is coupled to the sharp support until the device support reaches a distal position.

[0017] In some embodiments, the device support is uncoupled from the sharp support when the device support reaches the distal position. In some embodiments, a retention member is provided to couple the sharp support to the sheath when the sharp support is disposed in the proximal position.

[0018] In some embodiments, the medical device is an analyte sensor. In some embodiments, the medical device is a glucose sensor. In some embodiments, the medical device is an infusion set.

[0019] In certain embodiments, apparatuses for inserting a medical device at least partially through the skin of a subject are provided which include a sheath defining a distal surface for placement on the skin of the subject; a handle movable between a proximal position and distal position; a device support for supporting the medical device and defining an aperture

therethrough, the device support coupled to the handle; a sharp support for supporting a sharp extending through said aperture and coupled to the device support; and driver for biasing the sharp support towards the proximal position.

[0020] In some embodiments, the driver includes a compression spring. In some embodiments, the handle is at least partially disposed surrounding the sheath.

[0021] In some embodiments, a stop portion for retaining the device support in the distal position is included. In some embodiments, the device support is coupled to the handle until the device support reaches a distal position. In some embodiments, the device support is uncoupled from the sharp support when the device support reaches the distal position.

[0022] An apparatus for inserting a medical device at least partially through the skin of a subject is provided, which includes a first subassembly and a second subassembly. The first subassembly includes a sheath defining a distal surface for placement on the skin of the subject, a handle movable between a proximal position and distal position, a device support for supporting the medical device and defining an aperture therethrough, the device support coupled to the handle, a sharp support for supporting a sharp extending through said aperture and coupled to the device support, and a first driver for biasing the sharp support towards the proximal position. The second subassembly includes a housing configured for removable attachment to the first subassembly, and a second driver for advancing the sharp support towards the distal position.

[0023] In some embodiments, the second driver includes a rotatable cam or a torsion spring. In some embodiments, the second driver includes either an axial driver and a crank assembly or a

compression spring. In some embodiments, the first driver includes a compression spring, or a torsion spring.

[0024] In some embodiments, the handle is at least partially disposed surrounding the sheath. In some embodiments, a retention member for retaining the device support in the distal position is provided. The device support may be coupled to the handle until the device support reaches a distal position.

[0025] In some embodiments, the first subassembly is configured for a single use. In some embodiments, the second subassembly is configured for multiple uses.

[0026] Embodiments of analyte sensors are provided which include a body having a proximal section and a distal section. The distal section may be longitudinally aligned with the proximal section. An intermediate section may be included between the proximal and distal sections, and in some embodiments the intermediate section is laterally displaced from at least the distal member. A gap may be defined between the laterally displaced intermediate section and a portion of the distal section.

[0027] In some embodiments, the proximal end is received within a needle seat to create an anchor region to allow the sensor body to slide into an opening defined in the insertion sharp but prevent the sensor body from inadvertently slipping out of the insertion needle. In some embodiments, a width of the distal section of the sensor body is sized to fit within the opening of the insertion sharp. In certain embodiments, the opening in the sharp has a diameter of about 20 to about 26 gauge, *e.g.*, 21 gauge to about 25 gauge, where in certain embodiments the sharp is 21 gauge or 23 gauge or 25 gauge. Such sharp may be used with a sensor having a width or diameter – – at least the portion that is carried by the sharp – – of about .20 mm to about .80 mm,

e.g., about .25 mm to about .60 mm, where in some embodiments the width or diameter of at least a portion of a sensor is .27 mm or .33 mm or .58 mm.

[0028] In some embodiments, the intermediate member includes a plane-altering portion. The plane-altering portion allows the proximal section of the sensor body to be in a plane different than the distal section of the sensor body. In some embodiments, the proximal section and the distal section are in planes substantially perpendicular to each other, *e.g.*, the area may define an angle of about 120° to about 60°, *e.g.*, about 90°.

[0029] In some embodiments, the proximal section has a curved portion.

[0030] In some embodiments, the sensor body includes conductive material disposed in or on a surface thereto to define one or more electrodes. The sensor body may include conductive material defining traces disposed in or on a surface of the sensor body. The traces are in communication with the one or more electrodes. The traces may be disposed in or on at least one surface of the proximal section of the sensor body. The one or more electrodes may be disposed on the distal section of the sensor body. At least one of the traces or electrodes may include a metal or carbon material such as gold, platinum, titanium, and carbon. At least one of the traces or electrodes may be formed by ablation of material. The ablation may include laser ablation. In some embodiments, the sensor is a wire.

[0031] In some embodiments, the sensor includes a sensing layer. The sensing layer may include an enzyme. The sensing layer may include an electron transfer agent. The electron transfer agent may be a redox mediator. In some embodiments, the electron transfer agent includes osmium transition metal complexes and one or more ligands. The electron transfer agent may be configured to transfer electrons directly between the analyte and the working

electrode. The electron transfer agent may be configured to transfer electrons indirectly between the analyte and the working electrode.

[0032] In some embodiments, the sensing layer includes a redox polymer. The redox polymer may include osmium. The sensing layer may include a catalyst. The catalyst may include an enzyme. The catalyst may act as an electron transfer agent. In some embodiments, the enzyme includes glucose oxidase. In some embodiments, the enzyme includes glucose dehydrogenase.

[0033] In some embodiments, the sensing layer is configured such that the reaction of glucose in the presence of an enzyme forms hydrogen peroxide, and glucose level may be correlated to the level of hydrogen peroxide. In some embodiments, the sensor is a subcutaneous sensor.

[0034] These and other features, objects, and advantages of the disclosed subject matter will become apparent to those persons skilled in the art upon reading the detailed description as more fully described below.

BRIEF DESCRIPTION OF THE DRAWINGS

[0035] A detailed description of various aspects, features, and embodiments of the subject matter described herein is provided with reference to the accompanying drawings, which are briefly described below. The drawings are illustrative and are not necessarily drawn to scale, with some components and features being exaggerated for clarity. The drawings illustrate various aspects and features of the present subject matter and may illustrate one or more embodiment(s) or example(s) of the present subject matter in whole or in part.

[0036] **FIGURE 1** is a schematic view of the system in accordance with one embodiment of the disclosed subject matter;

[0037] **FIGURE 2** is a view, in partial cross section, of an electrochemical sensor in accordance with one embodiment of the disclosed subject matter;

[0038] **FIGURE 3** is a view, in partial cross-section, of an electrochemical sensor in accordance with another embodiment of the disclosed subject matter;

[0039] **FIGURE 4** is a view of the electrochemical sensor of FIGURE 3 in a folded configuration in accordance with the disclosed subject matter;

[0040] **FIGURE 5A** is a view of an electrochemical sensor in accordance with a further embodiment of the disclosed subject matter;

[0041] **FIGURE 5B** is a view of the electrochemical sensor of FIGURE 5 in a folded configuration in accordance with the disclosed subject matter;

[0042] **FIGURES 6A-6B** are views of an electrochemical sensor in accordance with a further embodiment of the disclosed subject matter;

[0043] **FIGURE 7** is a perspective view of an on-body unit in accordance with one embodiment of the disclosed subject matter;

[0044] **FIGURE 8** is a perspective view in partial cross-section of an on-body unit of FIGURE 7 in accordance with the disclosed subject matter;

[0045] **FIGURE 9** is a schematic view of the system in accordance with one embodiment of the disclosed subject matter;

[0046] **FIGURE 10** is a sectional, perspective view of another embodiment of an inserter in accordance with the disclosed subject matter;

[0047] **FIGURES 11-12** are perspective views of components of the inserter of FIGURE 10 in accordance with the disclosed subject matter;

[0048] **FIGURE 13** is a sectional, perspective view of a component of the inserter of FIGURE 10 in accordance with the disclosed subject matter;

[0049] **FIGURES 14-15** are perspective views of components of the inserter of FIGURE 10 in accordance with the disclosed subject matter;

[0050] **FIGURE 16** is a sectional view of the component of FIGURE 15 in accordance with the disclosed subject matter;

[0051] **FIGURES 17-18** are schematic views of a needle hub in accordance with one embodiment of the disclosed subject matter;

[0052] **FIGURE 19** is a distal end view of a sharp in accordance with one embodiment of the disclosed subject matter;

[0053] **FIGURE 20** is a side view of a sharp in accordance with one embodiment of the disclosed subject matter;

[0054] **FIGURE 21** is a side view of a sharp in accordance with one embodiment of the disclosed subject matter;

[0055] **FIGURE 21A** is a perspective view with parts separated of an inserter in accordance with one embodiment of the disclosed subject matter;

[0056] **FIGURE 22** is a perspective view of an inserter in accordance with one embodiment of the disclosed subject matter;

[0057] **FIGURE 23** is a perspective view with parts separated of an inserter in accordance with one embodiment of the disclosed subject matter;

[0058] **FIGURE 24** is an enlarged sectional view with parts separated of an inserter in accordance with one embodiment of the disclosed subject matter;

[0059] **FIGURES 25-27** are perspective views of components of the inserter of FIGURE 10 in accordance with the disclosed subject matter;

[0060] **FIGURES 28-29** are sectional views of the inserter of FIGURE 10 in accordance with the disclosed subject matter;

[0061] **FIGURES 30-31** are sectional views of components of the inserter of FIGURE 10 in accordance with the disclosed subject matter;

[0062] **FIGURE 31A** is a sectional view of components of the inserter of FIGURE 10 shown separated from the on-body unit in accordance with the disclosed subject matter.

[0063] **FIGURES 32-33** illustrate, by schematic, a power supply switch mechanism including conductive plug of the on-body integrated sensor and sensor electronics assembly in accordance with embodiments of the disclosed subject matter;

[0064] FIGURE 34 is a perspective view of an embodiment of an inserter in accordance with one embodiment of the disclosed subject matter;

[0065] FIGURES 35-36 are perspective views of the inserter of FIGURE 34 in accordance with the disclosed subject matter;

[0066] FIGURES 37-39 are sectional, perspective views of the inserter of FIGURE 34 in accordance with the disclosed subject matter;

[0067] FIGURES 40-41 are perspective views of the inserter of FIGURE 34 in accordance with the disclosed subject matter;

[0068] FIGURES 42-43 are perspective views of another embodiment of an inserter in accordance with the disclosed subject matter;

[0069] FIGURES 44-49 are perspective views of components of the inserter of FIGURE 42 in accordance with the disclosed subject matter;

[0070] FIGURE 50 is a sectional view of the inserter of FIGURE 42 in accordance with the disclosed subject matter;

[0071] FIGURE 51 is a sectional, perspective view of the inserter of Figure 42 in accordance with the disclosed subject matter;

[0072] FIGURE 52 is a perspective view of the inserter of FIGURE 42 in accordance with the disclosed subject matter;

[0073] FIGURES 53-54 are sectional, perspective views of the inserter of FIGURE 42 in accordance with the disclosed subject matter;

[0074] FIGURES 55-56 are perspective views of the inserter of FIGURE 42 in accordance with the disclosed subject matter;

[0075] FIGURES 57-58 are perspective views of another embodiment of an inserter in accordance with the disclosed subject matter;

[0076] FIGURES 59-63 are perspective views of components of the inserter of FIGURE 57 in accordance with the disclosed subject matter;

[0077] FIGURE 64 is a sectional views of the inserter of FIGURE 57 in accordance with the disclosed subject matter;

[0078] FIGURES 65-67 are sectional, perspective views of the inserter of Figure 57 in accordance with the disclosed subject matter;

[0079] FIGURE 68 is a perspective view of another embodiment of an inserter In accordance with the disclosed subject matter;

[0080] FIGURE 69 is a side view of the inserter of FIGURE 68 in accordance with the disclosed subject matter;

[0081] FIGURES 70-71 are cross-sectional views of the inserter of FIGURE 68 in accordance with the disclosed subject matter;

[0082] FIGURE 72 is a side view of another inserter in accordance with the disclosed subject matter;

[0083] FIGURES 73-75 are sectional, perspective views of the inserter of FIGURE 72 in accordance with another embodiment of the disclosed subject matter;

[0084] FIGURE 76 is a perspective view of another inserter in accordance with the disclosed subject matter;

[0085] FIGURES 77-79 are sectional views of the inserter of FIGURE 76 in accordance with another embodiment of the disclosed subject matter;

[0086] FIGURE 80 is a perspective view of another inserter in accordance with the disclosed subject matter;

[0087] FIGURES 81-83 are sectional, perspective views of the inserter of FIGURE 80 in accordance with another embodiment of the disclosed subject matter;

[0088] FIGURE 84 is a perspective view in section of another embodiment of an inserter in accordance with the disclosed subject matter;

[0089] FIGURE 85 is a perspective view of the inserter of FIGURE 84 in accordance with the disclosed subject matter;

[0090] FIGURES 86-89 are perspective views of components of the inserter of FIGURE 84 in accordance with the disclosed subject matter;

[0091] FIGURE 89A illustrates an exploded view of the inserter of FIGURE 84 in accordance with the disclosed subject matter;

[0092] FIGURE 90 is a side view of the inserter of FIGURE 84 in accordance with the disclosed subject matter;

[0093] FIGURES 91-93 are side views with transparency of the inserter of FIGURE 84 in accordance with the disclosed subject matter;

[0094] FIGURE 94 is an inserter in accordance with another embodiment in accordance with the disclosed subject matter;

[0095] FIGURE 95 is a perspective view in section of the inserter of FIGURE 94 in accordance with the disclosed subject matter;

[0096] FIGURE 95A is a cross-sectional view of the inserter of FIGURE 94 in accordance with the disclosed subject matter;

[0097] FIGURE 95B is a side view of the inserter of FIGURE 94 in accordance with the disclosed subject matter;

[0098] FIGURES 96-99 are perspective views of components of the inserter of FIGURE 94 in accordance with the disclosed subject matter;

[0099] FIGURE 99A is an exploded view of the inserter of FIGURE 94 in accordance with the disclosed subject matter;

[00100] FIGURE 100 is a side view with transparency of the inserter of FIGURE 94 in accordance with the disclosed subject matter;

[00101] FIGURES 101-105 are perspective views of another inserter in accordance with the disclosed subject matter;

[00102] FIGURE 106 is an exploded, perspective view of another embodiment of the disclosed subject matter;

[00103] FIGURE 107 is a sectional view of an inserter in accordance with the disclosed subject matter;

[00104] FIGURES 108-109 are perspective views from below of the inserter of FIGURE 107;

[00105] FIGURE 110 is a perspective view of another inserter in accordance with the disclosed subject matter;

[00106] FIGURES 110A-110C are perspective views of various components of the inserter of FIGURE 110;

[00107] FIGURE 110D is a partial cross-section view of a component of the inserter FIGURE 110;

[00108] **FIGURE 110E-F** are perspective views of various components of the inserter of FIGURE 110;

[00109] **FIGURES 111A-111C** depict different subassemblies of the components of the inserter of FIGURE 110;

[00110] **FIGURES 111D-111E** are cross-sectional views of a subassembly of the components of the inserter of FIGURE 110;

[00111] **FIGURES 112A-112C** depict the steps used to actuate the inserter of FIGURE 110;

[00112] **FIGURES 113-114** are perspective views of an inserter in accordance with another embodiment of the disclosed subject matter;

[00113] **FIGURES 115-116** are perspective views of the inserter of the embodiment of FIGURE 113 in combination with the inserter of FIGURE 68 in accordance with another embodiment of the disclosed subject matter;

[00114] **FIGURES 117-119** are side views of the inserter of the embodiment of FIGURE 113 in combination with the inserter of FIGURE 68 in accordance with another embodiment of the disclosed subject matter;

[00115] **FIGURES 120-121** are perspective views of an inserter in accordance with another embodiment of the disclosed subject matter;

[00116] **FIGURES 122-123** are perspective views of the inserter of the embodiment of FIGURE 120 in combination with the inserter of FIGURE 68 in accordance with another embodiment of the disclosed subject matter;

[00117] **FIGURES 124-126** are side views of the inserter of the embodiment of FIGURE 120 in combination with the inserter of FIGURE 68 in accordance with another embodiment of the disclosed subject matter;

[00118] **FIGURES 127-128** are perspective views of an inserter in accordance with another embodiment of the disclosed subject matter; and

[00119] **FIGURES 128A-128J** are views of the inserter of FIGURES 127-128 showing the inserter actuation process.

DETAILED DESCRIPTION OF THE EMBODIMENTS

[00120] A detailed description of the disclosure is provided herein. It should be understood, in connection with the following description, that the subject matter is not limited to particular embodiments described, as the particular embodiments of the subject matter may, of course, vary. It is also to be understood that the terminology used herein is for the purpose of describing particular embodiments only, and is not intended to be limiting, since the scope of the disclosed subject matter will be limited only by the appended claims.

[00121] Where a range of values is provided, it is understood that each intervening value between the upper and lower limit of that range, and any other stated or intervening value in that stated range, is encompassed within the disclosed subject matter. Every range stated is also intended to specifically disclose each and every "subrange" of the stated range. That is, each and every range smaller than the outside range specified by the outside upper and outside lower limits given for a range, whose upper and lower limits are within the range from said outside lower limit to said outside upper limit (unless the context clearly dictates otherwise), is also to be

understood as encompassed within the disclosed subject matter, subject to any specifically excluded range or limit within the stated range. Where a range is stated by specifying one or both of an upper and lower limit, ranges excluding either or both of those stated limits, or including one or both of them, are also encompassed within the disclosed subject matter, regardless of whether or not words such as "from," "to," "through," or "including" are or are not used in describing the range.

[00122] Unless defined otherwise, all technical and scientific terms used herein have the same meaning as commonly understood by one of ordinary skill in the art to which this disclosed subject matter belongs. Although any methods and materials similar or equivalent to those described herein can also be used in the practice or testing of the present disclosed subject matter, this disclosure may specifically mention certain exemplary methods and materials.

[00123] All publications mentioned in this disclosure are, unless otherwise specified, incorporated by reference herein for all purposes, including without limitation to disclose and describe the methods and/or materials in connection with which the publications are cited.

[00124] The publications discussed herein are provided solely for their disclosure prior to the filing date of the present application. Nothing herein is to be construed as an admission that the present disclosed subject matter is not entitled to antedate such publication by virtue of prior invention. Further, the dates of publication provided may be different from the actual publication dates, which may need to be independently confirmed.

[00125] As used herein and in the appended claims, the singular forms "a," "an," and "the" include plural referents unless the context clearly dictates otherwise.

[00126] Nothing contained in the Abstract or the Summary should be understood as limiting the scope of the disclosure. The Abstract and the Summary are provided for bibliographic and convenience purposes and due to their formats and purposes should not be considered comprehensive.

[00127] As will be apparent to those of skill in the art upon reading this disclosure, each of the individual embodiments described and illustrated herein has discrete components and features which may be readily separated from or combined with the features of any of the other several embodiments without departing from the scope or spirit of the present disclosed subject matter. Any recited method can be carried out in the order of events recited, or in any other order which is logically possible. Reference to a singular item includes the possibility that there are plural of the same item present. When two or more items (for example, elements or processes) are referenced by an alternative "or," this indicates that either could be present separately or any combination of them could be present together except where the presence of one necessarily excludes the other or others.

System Overview

[00128] Embodiments include analyte monitors that are provided in small, lightweight, battery-powered and electronically-controlled systems. Such systems may be configured to detect physical parameters of subjects, such as signals indicative of *in vivo* analyte levels using an electrochemical sensor, and collect such signals, with or without processing. The electrochemical sensors may employ any suitable measurement technique, *e.g.*, may detect current, may employ potentiometry, etc. Techniques may include, but are not limited to amperometry, coulometry, voltammetry. In some embodiments, sensing systems may be optical,

colorimetric, and the like. In some embodiments, the portion of the system that performs this initial processing may be configured to provide the raw or at least initially processed data to another unit for further collection and/or processing. Such provision of data may be effected, for example, by a wired connection, such as an electrical, or by a wireless connection, such as an IR or RF connection.

[00129] Certain embodiments of analyte-monitoring systems for *in vivo* measurement employ a sensor that measures analyte levels in interstitial fluids at least partially under the surface of the subject's skin. A sensor in such a system may operate as an electrochemical cell. Such a sensor may use any of a variety of electrode configurations, such as a three-electrode configuration (*e.g.,* with "working," "reference," and "counter" electrodes) driven by a controlled potential (potentiostat) analog circuit; a two-electrode system configuration (*e.g.,* with only working and counter electrodes or a working electrode and a counter/reference electrode), which may be self-biasing and/or self-powered; and/or other configurations (see, *e.g.*, U.S. Patent Application Serial No. 12/393,921, the disclosure of which is incorporated by reference herein for all purposes). In some embodiments, the sensor may be positioned within a blood vessel.

[00130] In certain systems, the analyte sensor is in communication with a sensor control unit. As used in this disclosure, an on-body unit sometimes refers to such a combination of an analyte sensor with such a sensor control unit. The on-body unit may include a housing in which the sensor control unit electronics and at least a portion of the sensor are received.

[00131] Certain embodiments are modular. The on-body unit may be separately provided as a physically distinct assembly from a monitor unit, *e.g.*, which displays or otherwise indicates analyte levels to a user. The on-body unit may be configured to provide the analyte levels

detected by the sensor and/or other information (such as temperature, sensor life, etc.) over a communication link to the monitor unit. The monitor unit, in some embodiments, may include, *e.g.,* a mobile telephone device, an in vitro glucose meter, a personal digital assistant, or other consumer electronics such as MP3 device, camera, radio, etc., or other communication-enabled data-processing device.

[00132] The monitor unit may perform a variety of functions such as but not limited to data storage and/or processing and/or analysis and/or communication, etc., on the received analyte data to generate information pertaining to the monitored analyte levels and/or process the other information. The monitor unit may incorporate a display screen, which can be used, for example, to display measured analyte levels, and/or an audio component such as a speaker to audibly provide information to a user, and/or a vibration device to provide tactile feedback to a user. It is also useful for a user of an analyte-monitoring system to be able to see trend indications (including the magnitude and direction of any ongoing trend, *e.g.*, the rate of change of an analyte or other parameter, and the amount of time a subject is above and/or below a threshold, such as a hypoglycemic and/or hyperglycemic threshold, etc.); such data may be displayed either numerically, or by a visual indicator such as an arrow that may vary in visual attributes, like size, shape, color, animation, or direction. The monitor unit may further be adapted to receive information from or about an *in vitro* analyte test strip, which may be manually or automatically entered into the monitor unit. In some embodiments a monitor unit may incorporate an *in vitro* analyte test strip port and related electronics in order to be able to make discrete (*e.g.*, blood glucose) measurements using an *in vitro* test strip (see, *e.g.*, U.S. Patent No. 6,175,752, the disclosure of which is incorporated by reference herein for all purposes).

[00133] The modularity of these systems may vary where one or more components may be constructed to be single use and one or more may be constructed to be re-useable. In some embodiments the sensor is designed to be attachable and detachable from the sensor control unit (and the on-body unit may be reusable), *e.g.*, so that one or more of the components may be reused one or more times, while in other embodiments, the sensor and sensor control unit may be provided as an integrated, undetachable package, which may be designed to be disposable after use, *i.e.*, not re-used.

[00134] FIGURE 1 shows one embodiment of an analyte measurement system 10. In such a system, a data-processing unit or sensor control unit 12 may interact with an analyte sensor 14 to obtain signals representative of analyte levels. Sensor control unit 12 may further include communications circuitry with associated electronics (not shown). In some embodiments, the sensor control unit 12 and at least a portion of a sensor are configured to be maintained "on the body" of the subject, in the substantially same position on the body of the subject, for a period of time that may include hours, days, weeks, or a month or more. Accordingly, the sensor control unit 12 and sensor 14 may be referred to collectively herein as an on-body unit 16. A monitor unit 18 may also be provided. In the embodiment shown, sensor control unit 12 and monitor unit 18 communicate *via* connection 20 (in this embodiment, a wireless radio frequency (RF) connection). Communication may occur, *e.g.*, *via* RF communication, infrared communication, Bluetooth communication, Zigbee communication, 802.1x communication, or WiFi communication, etc. In some embodiments, the communication may include a radio frequency of 433 MHz, 13.56 MHz, or the like. In some embodiments, communication between sensor control unit 12 and monitor unit 18 may include radio frequency identification (RFID) techniques, and may be active RFID or passive RFID, where in some embodiments passive

RFID technology and the respective system components include the necessary components therefor. For example, in certain embodiments, the on-body unit 16 and the monitor unit 18 may be configured to communicate using RFID communication protocol, wherein the on-body unit 16 may be configured to communicate or provide analyte-related signals to the monitor unit 18 based on the presence or reception of at least one signal from the monitor unit 18. That is, in certain embodiments, the monitor unit 18 may be configured to provide or radiate RF power signals, and when the on-body unit 16 is positioned within the radiated or provided RF signal range radiated from the monitor unit 18, the on-body unit 16 in certain embodiments is configured to provide one or more signals associated with the monitored analyte level received from the analyte sensor 14 to the monitor unit 18. For example, in one embodiment, the monitor unit may include a backscatter RFID reader configured to transmit an RF field such that when the on-body unit is within the transmitted RF field, an antenna is tuned and in turn provides a reflected or response signal (for example, a backscatter signal) to the monitor unit. The reflected or response signal may include sampled analyte level data from the analyte sensor. Additional exemplary details for various embodiments can be found in, *e.g.*, U.S. Patent Application Serial No. 12/698,124 filed February 1, 2010, the disclosure of which is incorporated by reference herein for all purposes.

[00135] In some embodiments, a secondary monitor unit 22 may be provided. A data-processing terminal 24 may also be included, *e.g.*, for providing further processing or review of analyte data. In some embodiments, the secondary monitor unit 22 may include similar components and/or functionalities as the monitor unit 18, or alternatively, include more or less functionalities or components compared to the monitor unit 18 to, for example, analyze, process, store, and/or communicate data from the analyte sensor 14 and/or monitor unit 18.

[00136] In some embodiments, system 10 may be a continuous analyte monitor (*e.g.*, a continuous glucose-monitoring system or CGM), and accordingly operate in a mode in which the communications *via* connection 20 has sufficient range to support a flow of data from on-body unit 16 to monitor unit 18. In some embodiments, the data flow in a CGM system is automatically provided by the on-body unit 16 to the monitor unit 18. For example, no user intervention may be required for the on-body unit 16 to send the data to the monitor unit 18, *e.g.*, it may be continually and/or automatically broadcasted. In some embodiments, the on-body unit 16 provides signal relating to analyte level to the monitor unit 18 automatically and periodically. For example, one or more signals may be provided, *e.g.*, automatically sent, on a schedule, *e.g.*, once every 250ms, once a second, once a minute, etc. That is, in certain embodiments, the on-body unit 16 may be configured and/or programmed to communicate or transmit the data acquired from the analyte sensor 14 based on a predetermined schedule, and continue to broadcast or transmit signals related to the real time monitored analyte levels based on the predetermined schedule. In such embodiments, the monitor unit 18 may be configured to receive and/or anticipate and acquire the transmitted signals from the on-body unit 16 based on the predetermined schedule, for example, for further processing, such as display, storing, analysis, and/or further data communication.

[00137] In some embodiments, one or more signals may be provided to the monitor unit 18 upon the occurrence of, or impending occurrence of, an event, *e.g.*, a hyperglycemic event or a hypoglycemic event, etc. In some embodiments, the one or more signals may be provided to the monitor unit 18 on an adaptive schedule. For example, the schedule for automatically communicating the one or more signals may be adjusted by machine learning techniques (*e.g.*, supervised learning techniques, unsupervised learning techniques, data mining, etc.) according to

parameters received by the sensor control unit 12 and/or monitor unit 18, such as, *e.g.*, analyte values and trends, activity levels, meal times, etc.). In some embodiments, sensor control unit 12 may further include local memory in which it may record "logged data" or buffered data collected over a period of time and provide some or all of the accumulated data to monitor unit 18 from time-to-time. Or, a separate data-logging unit may be provided to acquire periodically provided data from sensor control unit 12. Data transmission in a CGM system may be one-way communication, *e.g.*, the on-body unit 16 provides data to the monitor unit 18 without receiving signals from the monitor unit 18. In some embodiments, two-way communication is provided between the on-body unit 16 and the monitor unit 18, using, for example, one or more transceivers or other bi-directional communication components. Such two-way communication may be achieved in certain embodiments independently. That is, in certain embodiments, certain data communication from the on-body unit 16 may be independent of the data received from the monitor unit 18. In other embodiments, certain data communication from the on-body unit 16 may in response or responsive to the data, signal, request, or one or more commands received from the monitor unit 18.

[00138] In some embodiments, one or more signals may be provided to the monitor unit 18 from the on-body unit on user demand. According to such embodiments, the monitor unit 18 requests data from the on-body unit 16. Accordingly, embodiments include systems in which data is transferred from the on-body unit to the monitor unit only when the monitor unit invokes data from the on-body unit.

[00139] The data transfer request may be provided in several ways. For example, in some embodiments, one or both of the on-body unit 16 and monitor unit 18 may include a mechanical

switch activatable by a user or activated upon some other action or event, the activation of which initiates the transfer of signal from the on-body unit 16 to the monitor unit 18. A mechanical switch may be provided which is activatable by the user to cause power to be turned on to the on-body system, *e.g.*, to electronic components that control the sensor.

[00140] In some embodiments, the monitor unit 18 is placed in close proximity (*e.g.*, within a range of about one to about ten inches or less in certain embodiments) with the communications electronics of the on-body unit to cause initiation of data transfer from the on-body unit to the monitor unit, either over a wired connection, or wirelessly by various means, including, for example, various RF-carried encodings and protocols and IR links.

[00141] In some embodiments, a signal relating to analyte level is instantaneously generated by the analyte sensor 14 upon receipt of the request, and provided to the monitor unit 18 as requested.

[00142] In other embodiments, a signal relating to analyte level is obtained according to a schedule, *e.g.*, once every 250ms, once a second, once a minute, etc., and at least temporarily stored. Upon receipt of the data transfer request at the on-body unit 16 from the monitor unit 18, analyte-related information is provided to the monitor unit 18 from the on-body unit 16. In some cases, analyte-related information provided to the monitor unit 18 is or at least includes the most recent analyte signal(s).

[00143] In further embodiments, additional data is provided to the monitor unit 18 on demand. For example, analyte trend data may be provided. Such trend data may include two or more analyte data points to indicate that analyte levels are rising, falling, or stable. Analyte trend data

may include data from longer periods of time, such as, *e.g.*, several minutes, several hours, several days, or several weeks.

[00144] Further details regarding on-demand systems are disclosed in U.S. Patent Publication Nos. 2009/0018425 A1, published January 15, 2009; 2009/0054749 A1, published February 26, 2009; 2009/0257911 A1, published October 15, 2009, 2009/0281406 A1, published November 12, 2009; 2009/0294277 A1, published December 3, 2009; 2008/0058625 A1, published March 6, 2008; 2008/0064937 A1, published March 13, 2008; 2008/0071157 A1, published March 20, 2008; 2008/0071158 A1, published March 20, 2008; 2008/0179187 A1, published July 31, 2008; 2008/0319295 A1, published December 25, 2008;2008/0319296 A1, published December 25, 2008; 2007/0149873 A1, published June 28, 2007;2007/0149875 A1, published June 28, 2007; 2009/0321277 A1, published December 31, 2009; 2010/0030052 A1, published February 4, 2010; and pending U.S. Patent Application Nos. 12/211,014, filed September 15, 2008; 12/242,780, filed September 30, 2008; 12/393,921, filed February 27, 2009; 12/495,709, filed June 30, 2009; 12/495,712, filed June 30, 2009; 12/495,730, filed June 30, 2009; 12/544,061, filed August 19, 2009; 12/625,185, filed November 24, 2009; 12/625,208, filed November 24, 2009; 12/625,524, filed November 24, 2009; 12/625,525, filed November 24, 2009; 12/625,528, filed November 24, 2009; 12/624,767, filed November 24, 2009; 12/628,177, filed November 30, 2009; 12/628,198, filed November 30, 2009; 12/628,201, filed November 30, 2009; 12/628,203, filed November 30, 2009; 12/628,210, filed November 30, 2009; 12/698,129, filed February 1, 2010; 12/698,124, filed February 1, 2010; 12/714,439, filed February 26, 2010; 61/163,006, filed March 24, 2009; 61/227,967, filed July 23, 2009; 61/238,159, filed August 29, 2009; 61/238,483, filed August 31, 2009; 61/238,494, filed August 31, 2009; 61/238,581, filed August 31, 2009; 61/247,508, filed September 30, 2009; 61/247,514, filed September 30, 2009;

61/247,516, filed September 30, 2009; 61/247,519, filed September 30, 2009; 61/249,535, filed October 7, 2009; 61/256,925, filed October 30, 2009; 61/291,326, filed December 31, 2009; 61/299,924, filed January 29, 2010; 61/297,625, filed January 22, 2010; 61/297,615, filed January 22, 2010, each of which is incorporated by reference herein for all purposes.

The Sensor

[00145] The analyte sensor 14 of the analyte measurement system 10 may be used to monitor levels of a wide variety of analytes. Analytes that may be monitored include, for example, acetylcholine, amylase, bilirubin, cholesterol, chorionic gonadotropin, creatine kinase (*e.g.*, CK-MB), creatine, DNA, fructosamine, glucose, glutamine, growth hormones, hormones, ketones, lactate, peroxide, prostate-specific antigen, prothrombin, RNA, thyroid-stimulating hormone, and troponin. The concentration of drugs, such as, for example, antibiotics (*e.g.*, gentamicin, vancomycin, and the like), digitoxin, digoxin, drugs of abuse, theophylline, and warfarin, may also be monitored. One or more analyte may be monitored by a given sensor.

[00146] In one embodiment of the present disclosure, sensor 14 is physically positioned in or on the body of a user whose analyte level is being monitored. Sensor 14 may be configured to continuously sample the analyte level of the user and convert the sampled analyte level, *e.g.*, glucose concentration into a corresponding data signal, *e.g.*, a current or voltage, for input into sensor control unit electronics. Alternatively, sensor 14 may be configured to sample analyte levels on demand. The sensor control unit electronics may amplify, filter, average, and/or otherwise process signal provided by the sensor.

[00147] The sensor may take on a number of forms. For example, the sensor may include a flexible or rigid substrate. In some embodiments, the sensor may be a wire. In some embodiments, the sensor may include two or three or more electrodes.

[00148] An embodiment of the sensor 14 is illustrated in FIGURE 2. The shape(s) described herein are exemplary only. Other sensor shapes are contemplated. In some embodiments, sensor 14 includes a substrate which is a dielectric, *e.g.*, a polymer or plastic material, such as polyester or polyamide. In this embodiment, the sensor is constructed so that a portion is positionable beneath skin and a portion is above skin. Accordingly, sensor 14 includes an insertion or internal portion 30 and an external or electrical contact portion 32. The contact portion 32 typically includes several conductive contacts 36, 38, and 40 (herein shown as three contacts) for connection to other electronics, *e.g.*, at the sensor control unit 12. The contacts provided in this embodiment are for a working electrode, a reference electrode, and a counter electrode. In some embodiments, two or more working electrodes are provided. The operative portions of these electrodes, that is, working electrode, reference electrode, and counter electrode (not individually shown), are provided at the insertion portion, *e.g.*, at the distal end of insertion portion 30, *e.g.*, portion 34. In some embodiments, one or more electrodes may be external to the body, *e.g.*, an external counter electrode. The contact and operative portions of the electrodes are connected by circuit traces 42, 44, and 46 running on the surface of the substrate. In some embodiments, the traces are provided in channels, or may be embedded within the substrate, or may traverse different sides of the substrate. The conductive contacts, conductive traces, and electrodes are fabricated from conductive material, such as platinum, palladium, gold, carbon, or the like. More than one material may be used for a given sensor. Further details of sensors are described,

e.g., in U.S. Patent Nos. 6,175,572 and 6,103,033, which are incorporated by reference herein for all purposes.

[00149] Sensor 14 may include a proximal retention portion 48. In some embodiments, the insertion portion 30 and the proximal retention portion 48 are substantially longitudinally aligned. The insertion portion 30 and the proximal retention portion 48 are sized and configured to be positioned with a sharp for installation into the skin of a subject, as described herein. In use, the sensor 14 may be configured to bend (*e.g.*, along the line B) and therefore be positioned in two substantially perpendicular, intersecting planes.

[00150] As illustrated in FIGURE 3, sensor 14' is substantially identical to sensor 14, with many of the differences illustrated in FIGURE 3 and noted herein. Sensor 14'' further includes additional features useful for connecting to, *e.g.*, mounting to or in or on, a housing associated with the sensor control unit 12. For example, sensor 14' includes a laterally displaced portion (or sensor tab) 50' and a connector portion, shown in this embodiments as a longitudinal displaced portion 52' which provides a path for electrical connections, *e.g.*, the conductive traces, between the proximal and distal portions of the sensor. Sensor 14' is further provided with a notch or cut-out 54' between the proximal retention portion 48' and the longitudinal displaced portion 52'. Such configuration facilitates the sensor 14' to bend (*e.g.*, along the line indicated by line B) and therefore be positioned in two substantially perpendicular, intersecting planes, as illustrated in FIGURE 4. As will be described below, the sensor tab 50' can be encased in the portion of the body of the sensor control unit 12 to aid in securing and positioning the sensor 14'. Proximal retention portion 48' maintains its longitudinal alignment with insertion portion 30 for positioning within an insertion sharp.

[00151] FIGURES 5A and 5B illustrate a further embodiment of a sensor 14" in accordance with the disclosure. Sensor 14" is substantially identical to sensor 14 and 14', with certain exemplary differences illustrated in FIGURE 4 and noted herein. For example, sensor 14" includes a contact portion 32' which defines a fan-like configuration having a curved edge. The contact portion 32" typically includes several conductive contacts 36", 38", and 40" (herein shown as three contacts) for connection to other electronics, *e.g.*, at the sensor control unit 12. The contacts provided in this embodiment are for a working electrode, a reference electrode, and a counter electrode. In some embodiments, two or more working electrodes are provided. The operative portions of these electrodes, that is, working electrode, reference electrode, and counter electrode (not individually shown), are provided at the insertion portion, *e.g.*, at the distal end of insertion portion 30", *e.g.*, portion 34". The contact and operative portions of the electrodes are connected by circuit traces 42", 44", and 46" running on the surface of substrate, provided in channels, embedded within the substrate, or traversing different sides of the substrate, substantially as described in connection with FIGURES 2 and 3. Sensor 14" defines a sensor flag indentation 56 " which also serves to assist in retaining the sensor 14" in a vertical orientation, as will be described below, and provides a discrete location for mating with a feature of the sensor control unit 12, *e.g.*, the bottom surface of a printed circuit board. Sensor 14" is likewise capable of bending along axis B, as illustrated in FIGURE 5B. In any of the embodiments of the sensor described herein, the distance between insertion portion 30 to retention portion 48 may be, *e.g.*, about 5 mm, or about 10 mm, or about 15 mm, or about 20 mm.

[00152] FIGURE 6A illustrates a further embodiment of a sensor 14"' in accordance with the disclosure. Sensor 14"' is substantially identical to sensor 14, 14' and 14", with certain

exemplary differences illustrated in FIGURE 6A and noted herein. For example, sensor 14''' includes a contact portion 32'''. The contact portion 32''' typically includes several conductive contacts 36''', 38''', and 40''' (herein shown as three contacts) for connection to other electronics, *e.g.*, at the sensor control unit 12. The contacts provided in this embodiment are for a working electrode, a reference electrode, and a counter electrode. In some embodiments, two or more working electrodes are provided. The operative portions of these electrodes, that is, working electrode, reference electrode, and counter electrode (not individually shown), are provided at the insertion portion, *e.g.*, at the distal end of insertion portion 30''', *e.g.*, portion 34'''. As shown, contact portion 32''', proximal retention portion 48'''and the distal portion 30''' of sensor 14''' are linearly aligned with respect to one another. The contact and operative portions of the electrodes may be connected by circuit traces running on the surface of the substrate. In some embodiments, the circuit traces may be embedded within the substrate, or traversing different sides of the substrate.. Sensor 14''' is likewise capable of bending along axis B, as illustrated in FIGURE 6B. In FIGURE 6B, contacts 36''', 38''', and 40''' are not visible, because they are located on the underside of contact portion 32''' and thus not shown in this view. It is understood that sensor 14''' may be positioned such that when the sensor is placed in contact with surrounding circuitry the contacts are downwardly positioned to engage circuitry below the contact portion 32''' or, in some embodiments, the contacts are upwardly directed to engage circuitry positioned above the contact portion 32'''. In any of the embodiments of the sensor described herein, the distance between insertion portion 30 to retention portion 48 may be, *e.g.*, about 5 mm, or about 10 mm, or about 15 mm, or about 20 mm.

[00153] Embodiments of analyte sensors have been described herein to operate electrochemically, through an arrangement of electrodes having chemical sensing layers applied

thereto, by generating an electrical current proportional to the volume of a redox reaction of the analyte (and indicative of analyte concentration), catalyzed by an analyte-specific oxidizing enzyme. Embodiments exist in which the number of electrodes provided to bring about and detect the level of these reactions is two, three, or a greater number. However, other types of sensors may be employed as described herein.

[00154] A portion of sensor 14 (which collectively refers to sensors 14', 14', and 14''' herein) may be situated above the surface of the skin, with a distal portion 30 penetrating through the skin and into the subcutaneous space in contact with the user's biofluid, such as interstitial fluid. Further details regarding the electrochemistry of sensor 14 is provided in U.S. Patent Nos. 5,264,104; 5,356,786; 5,262,035; 5,320,725; and 6,990,366, each of which is incorporated by reference herein for all purposes.

[00155] In some embodiments, the sensor is implantable into a subject's body for a usage period (*e.g.*, a minute or more, at least one day or more, about one to about 30 days or even longer, about three to about ten days, about three to about seven days, or in some embodiments, longer periods of up to several weeks) to contact and monitor an analyte present in a biological fluid. In this regard, the sensor can be disposed in a subject at a variety of sites (*e.g.*, abdomen, upper arm, thigh, etc.), including intramuscularly, transcutaneously, intravascularly, or in a body cavity.

[00156] In some embodiments, sensor 14 is employed by insertion and/or implantation into a user's body for some usage period. In such embodiments, the substrate may be formed from a relatively flexible material.

[00157] While the embodiments illustrated in FIGURES 2-6 have three electrodes, other embodiments can include a fewer or greater number of electrodes. For example, a two-electrode sensor can be utilized. The sensor 14 may be externally-powered and allow a current to pass proportional to the amount of analyte present. Alternatively, the sensor 14 itself may act as a current source in some embodiments. In some two-electrode embodiments, the sensor may be self-biasing and there may be no need for a reference electrode. An exemplary self-powered, two-electrode sensor is described in U.S. Patent Application Serial No. 12/393,921, filed February 26, 2009, and entitled "Self-Powered Analyte Sensor," which is hereby incorporated by reference herein for all purposes. The level of current provided by a self-powered sensor may be low, for example, on the order of nanoamperes, in certain embodiments.

On Body Unit

[00158] An exemplary configuration for a sensor 14 (and sensors 14' 14", and 14"') and sensor control unit 12 (*e.g.,* collectively, on-body unit 16) is illustrated in FIGURES 7-8. Sensor control unit 12, including its associated electronics 80, are housed in housing 122. Sensor housing 122 may be provided with a substantially circular configuration, or other shape. Sensor housing 122 has a reduced height (*i.e.*, "Z"-dimension) to provide a low profile when sitting on the skin of the subject. In some embodiments, the height is about 3 mm to about 25 mm, *e.g.*, may be about 4 mm, about 5 mm, about 10 mm, or about 15 mm. In certain embodiments, the sensor housing 122 may have a variable height such that it may have at least one portion that has a height that differs from at least one other portion. For example, electronics 80 may include one or more of, *e.g.*, an analog interface for connecting to the sensor 14, a processor, which may include, *e.g.*, an ASIC 91, antenna 94, power supply 82 to power the sensor and/or

communications components, and capacitors 93. In some embodiments, power supply 82 provides a current or voltage to the analyte sensor only. In some embodiments, power supply 82 also powers a communications circuit for providing signal to the monitor unit 18. Power supply 82 may be used to charge capacitors 93 for such periodic signal communication. A serial communication section may be provided. A temperature sensor, such as a thermistor that detects skin temperature, sensor temperature, and/or ambient temperature may be included to provide compensation to the analyte signal. An RF communication circuit is provided to communicate with the monitor unit 18. (see, FIGURES 1 or 9.) A data storage unit may be provided to store analyte data over a period of time, which in some embodiments may be a short term of time, *e.g.,* several hours or minutes, or over a longer term, *e.g.*, several days or weeks. Additional optional electronics include a serial communication section, a leakage detection circuit, or user input, *e.g.,* a switch to activate/deactivate some or all functions of the device. Many of the components may be combined together and/or their function provided by common components. Furthermore, certain components may be eliminated entirely. For example, a power supply may be omitted if power is provided by inductive coupling.

[00159] In some embodiments, a portion of sensor 14 is disposed on or within housing 122, *e.g.*, in a bent configuration, as illustrated in certain embodiments herein, *e.g.*, in FIGURES 4, 6, and 6B. In some embodiments, a portion of the contact portion of the sensor may be located on an outer surface of the sensor housing 122. The contact portion 32 of sensor 14 may be oriented in a substantially horizontal configuration (*e.g.*, substantially parallel to the skin surface to which it is attached), and secured to a printed circuit board of the sensor control unit 12. The insertion portion 30 of the sensor 14 may extend in a substantially downwardly vertical orientation for placement in the skin of the subject. In some embodiments, the insertion portion 30 is provided

with a substantially sharpened and/or pointed configuration to facilitate piercing of the skin. See, *e.g.*, U.S. Patent Application Serial No. 61/238,159 filed August 29, 2009, which is incorporated by reference herein for all purposes. It is understood that sensor 14 may be disposed in other configurations, *e.g.*, in an entirely substantially vertical configuration, etc. As a further example, the insertion portion 30 may be disposed at an oblique angle, *e.g.*, between about 0° and about 90° with respect to the skin surface.

[00160] Adhesive pad 118 is illustrated in FIGURE 8 to attach sensor housing 122 to the skin of the subject. In some embodiments, adhesive pad 118 is used instead of a separate mount. Adhesive pad 118 may include adhesive on both distal (upper) and proximal (lower) surfaces, such that adhesive pad is attached or attachable to both sensor housing 122 and the skin of the subject. In some embodiments, adhesive pad 118 may be first attached to the skin of the subject with the adhesive on the distal surface thereof. Subsequently, the housing 122 is adhered to the proximal surface of the adhesive pad 118. In other embodiments, proximal surface of adhesive pad 118 is first attached to sensor housing 122, and subsequently, the distal surface of adhesive pad 188 is then attached to the skin of the subject.

[00161] As illustrated in FIGURE 9, the on-body unit 16 communicates with the monitor unit 18. Such communication may be one-way communication, *e.g.*, from the on-body unit 16 to the monitor unit 18. In some embodiments, the communication may be two-way, *e.g.*, both from the on-body unit 16 to the monitor unit 18 and from the monitor unit 18 to the on-body unit 16. Communication between the on-body unit 16 and monitor unit 18 may be achieved using one or more radio frequency communication protocols, inductive coupling, magnetic coupling, direct wired connection, infrared data communication protocol, and the like as described herein.

Insertion Assembly

[00162] Insertion assemblies are provided, which are used to install a medical device to the subject. In some embodiments, an insertion assembly includes an inserter and the medical device itself. The inserter can be configured to insert various medical devices into the subject, such as for example, an analyte sensor, an infusion set, or a cannula. In some embodiments, the inserter can be configured to install a combination of such devices, *e.g.*, a combined sensor/infusion set, etc., at the same or different times or locations. For example, in certain embodiments a given inserter can be configured to install a first device and a second device at different times. In this regard, the inserter can be reusable. For example, an inserter may be modifiable to be used with more than one medical device, to include more than one type of medical device, *e.g.*, by attaching an adapter and/or removing detaching a portion of an inserter. The inserter can install the medical device in, under, or through the skin of the subject, or place the medical device on the surface of the skin. The medical device can include features or structures, *e.g.*, barbs, tabs, adhesive, etc., to maintain the device in position with respect to the skin after insertion. The inserter device may also be used as a lancet, *e.g.*, to pierce the skin without inserting or installing a medical device.

[00163] In some embodiments, an insertion assembly includes an inserter, a medical device, such as an analyte sensor, and a mount for supporting the medical device at least partially in or on the skin of the subject. In some embodiments, the mount is a support structure, plate and/or member which is attached, adhered, or otherwise secured to the skin of the subject. The mount may be inserted simultaneously with the medical device by the inserter. In other embodiments, the mount is installed after or before installation of the medical device. A mount may be applied

by the inserter or separately. The mount may include features or structures (*e.g.*, adhesive, guides, barbs, tabs, etc.) to maintain the sensor in position with respect to the skin after insertion and/or maintain the sensor in relative position with respect to the sensor control unit. In some embodiments, an adhesive pad or strip is used to secure the medical device, *e.g.*, the sensor and/or the sensor control unit, and no mount is used.

[00164] In some embodiments, an insertion assembly includes an inserter, an analyte sensor, a mount, and a power supply. The mount and power supply may be inserted simultaneously with the analyte sensor by the inserter. In other embodiments, the mount and battery are installed after or before installation of the analyte sensor. In such case the mount and/or power supply may be applied by the inserter or separately. The power supply may be used to provide a current or a potential to the sensor and/or to provide power for communication of one or more signals to the monitor unit.

[00165] In some embodiments, an insertion assembly includes an inserter, a medical device such as an analyte sensor, a mount, and a sensor control unit. The mount and sensor control unit may be deployed and/or installed simultaneously with the analyte sensor by the inserter. In other embodiments, the mount and sensor control unit are installed after or before installation of the analyte sensor. For example, the mount and the analyte sensor may be installed by the inserter, and the sensor control unit may be subsequently installed. In other embodiments, the mount is installed, followed by insertion of the analyte sensor by the inserter, and further followed by installation of the sensor control unit. In other embodiments, the mount and sensor control unit are installed first, and the analyte sensor is subsequently installed.

[00166] In some embodiments, electronics of the sensor control unit provide a voltage or current to the analyte sensor. In some embodiments, the electronics processes signals provided by the analyte sensor. In further embodiments, the electronics may include communication functionality for providing signal relating to signal provided by the analyte sensor to a further component, such as, *e.g.*, a monitor unit, a computer, or other component. In some embodiments, communications circuitry, such as RFID antenna or communications circuitry, is provided. The power supply may be used to power some or all of these functions. In some embodiments, power is provided from the monitor unit, *e.g.*, via inductive coupling.

[00167] An inserter can include a plurality of different components. For example, an inserter may include one or more components for advancing a sharp towards the skin of the subject. The sensor and sensor control unit and/or mounting structure may be supported by a support structure, such as a carriage. A driver may be provided for advancing the sharp and/or the analyte sensor/support structure. In some embodiments, the actuator is directly or indirectly coupled to the sharp and/or support structure, such that manual force and speed applied by the user to the actuator is transferred to the sharp and/or support structure. In some embodiments, the applied force drives the sharp and/or support structure between a retracted position and an advanced position. In some embodiments, the sensor and sensor control unit and/or mounting structure is maintained in a retracted position prior to installation by contacting projections extending inwardly from a sheath. In accordance with this embodiment, the sensor and sensor control unit and/or mounting structure are temporarily maintained operatively between the support structure and the projections disposed on the interior wall of the sheath.

[00168] An inserter can also include one or more components for retracting the sharp, while allowing the analyte sensor and optional mount and/or electronics to remain on the subject. The components for retracting the sharp can include a retractor. It is understood that the retractor and the actuator may be the same structure or include some common components. In some embodiments, the retractor is directly or indirectly coupled to the sharp such that the manual force applied by the user is transferred from the retractor to the sharp to retract the sharp from the skin. In other embodiments, a drive assembly may be provided to retract the sharp. For example, the drive assembly may include a spring, motor, hydraulic piston, etc., to retract the sharp away from the skin of the subject. The drive assembly may also include a linear drive component.

[00169] In some embodiments, the retractor withdraws the sharp upon actuation by the user. In such cases, the user actuates the retractor when it is desired to withdraw the sharp. For example, the retractor may include a release switch. Upon activation of the release switch, the drive assembly, *e.g.*, the spring or other driver, retracts the sharp from the skin. In other embodiments, the retractor and the actuator include common components. After activating the actuator to advance the sharp and the analyte sensor, the user releases the actuator, which allows the drive assembly to withdraw the sharp from the skin.

[00170] In some embodiments, the retractor withdraws the sharp without further user interaction after actuation of insertion. For example, the inserter may include features or components which automatically retract the sharp upon advancement of the sharp and support structure by a predetermined amount. Inserter devices, in which no further action by the user is

required to initiate withdrawal of the sharp after insertion, are referred to herein as having "automatic" withdrawal of the sharp.

Inserter Devices

[00171] An inserter 100 in accordance with an exemplary embodiment is illustrated in FIGURE 10. In some embodiments, inserter 100 has a maximum diameter of about 30mm to about 60 mm, *e.g.*, about 40 mm, about 43 mm, about 43.5 mm, about 50.5 mm, about 54.5 mm, etc. In some embodiments, inserter 100 has a maximum height of about 40 mm to about 80 mm, *e.g.*, about 44 mm, about 46 mm, about 50 mm, about 53 mm, about 67 mm, about 71 mm, etc. In some embodiments, inserter 100 has a volume of about 35 cm^3 to about 110 cm^3, *e.g.*, about 40 cm^3, about 41 cm^3, about 50 cm^3, about 60 cm^3, about 61 cm^3, about 62 cm^3, about 69 cm^3, about 70 cm^3, about 79 cm^3, about 90 cm^3, about 106 cm^3, etc. Inserter 100 includes a handle 102 and a removable distal cap 104. The cap 104 may maintain a sterile, contaminant-free environment for the medical device and sharp housed therein. As illustrated in FIGURES 10-13, distal cap 104 is detachably secured to handle 102, *e.g.*, by use of one or more mating members, *e.g.*, threads 110 and 111, or hooks, tape, magnets, adhesive, friction-fit, snap-fit, and the like. Inserter 100 includes a base 142 which defines a distal surface 112, which may be a substantially planar surface as shown in this embodiment, for placement on the skin S of a subject, and in other embodiments may be a curved or inclined surface, *e.g.*, a concave or convex surface. Inserter 100 may be utilized to advance a medical device into the skin of the subject, *e.g.*, an analyte sensor, and infusion set, etc., as described herein. In some embodiments, handle 102 is advanced relative to base 142 in order to advance the medical device into the skin of the patient, as will be described in greater detail herein.

[00172] The components of inserter 100 are illustrated in FIGURES 11-27. As illustrated in FIGURE 11, handle 102 includes a contact surface 114 for contact by a user to depress to advance the sensor housing 122 (as illustrated in FIGURE 10) and sensor 14 towards the skin of the subject. Threads 110 are provided on handle 102 (as illustrated in FIGURE 11) for attachment to cap 104 *via* threads 111 (as illustrated in FIGURES 12-13). Cap 104 can include a receptable, such as an upwardly extending sleeve 125 to assist positioning of the sharp 124. The distal portion of cap 104 includes a recess 115 for retaining a desiccant 190 therein. In some embodiments, a silica gel or molecular sieves may be used. Such material can be in granular form (pellets) or pressed into tablets, or otherwise. In some embodiments, silica gel tablets are used. Embodiments may include desiccant and/or packaging as described in U.S. Patent Application Serial No. 12/714,439, which is incorporated by reference herein for all purposes.

[00173] Cap 104 may be provided with one or more apertures 117, which allows for passage of air to the desiccant 190 to remove moisture from the interior of the inserter 100. Cap 104 may include a stop such as an annular ridge 113, which engages the distal edge portion 116 of handle 102. In some embodiments, a stop such as annular ridge 113 prevents distal movement of handle 102 (as well as sharp 124) when cap 104 is attached to handle 102.

[00174] Base 142, as illustrated in FIGURES 10 and 14, includes a distal sheath portion 192, which shields sharp 124 prior to deployment and a distal rim 112 having a substantially planar surface configuration to rest on the subject's skin S. Base 142 also includes side walls 191, which along with inner rail 128 defines a recess for retraction spring 146. Base 142 provides a spring retention portion 148, as illustrated in FIGURE 29.

[00175] Support member or shuttle 134, as illustrated in FIGURES 15-16, supports needle hub 136, from which sharp 124 extends longitudinally within the inserter 100. In some embodiments, the sharp is supported at an oblique angle, *e.g.*, between and including about 0° and about 90° with respect to the skin surface. Needle hub 136 can be secured to shuttle 134 *via* interlocking snaps or tabs, an O-ring configuration, adhesive, or other techniques known in the art. In some embodiments, sharp 124 is a solid needle. In some embodiments, sharp 124 is provided with a substantially cylindrical configuration defining an interior bore, *e.g.*, a rigid cylindrical member or a hypodermic-style needle.

[00176] Needle hub 136 is further illustrated in FIGURES 17-18. Needle hub 136 supports sharp 124, having a sharpened distal portion 160. In some embodiments, as discussed herein, a longitudinal wall opening or gap 162 is provided in at least a portion of the wall of the sharp 124. The length N of the gap 162 is selected to be commensurate with the length of the insertion portion 30 through to the proximal retention portion 48 of the sensor, and in certain embodiments may be about 3 mm to about 50 mm, *e.g.*, about 5 mm, or about 10 mm, or about 15 mm, or about 20 mm. The length L of the sharp 124 may be about 3 mm to about 50 mm, *e.g.*, 5mm or more, or about 10 mm, or about 20 mm, or about 30 mm, or about 50 mm, and is selected based upon the length of the insertion portion 30 of a sensor and the desired depth of the insertion portion 30 of the sensor 14. In some embodiments, the distance or spacing between the two edges of the gap is about 0.2mm to about 0.5mm, *e.g.*, about 0.22mm, about 0.25mm, etc.

[00177] The distal portion 160 of sharp 124 is illustrated in greater detail in FIGURES 19-21. As illustrated in FIGURE 19, sharp 124 has a substantially "C"- or "U"-shaped profile in this embodiment, but may have other configurations, *e.g.*, substantially "V"-shaped. A longitudinal

gap 162 is provided in the wall of the sharp 124. FIGURE 20 illustrates distal portion 160 is provided with an angled tip. In some embodiments, the angled tip may be provided with a first angled tip portion 164 and a second steep-angled tip portion 166. The exemplary configuration, which includes multiple edges and faces, provides a sharp point to reduce penetration force, trauma, and bleeding for the subject. The distal section of the sensor body has a width sized to fit within the notch 162 of the insertion sharp 124 having a diameter less than about 20 to about 26 gauge, *e.g.*, 21 gauge to about 25 gauge, where in certain embodiments the sharp is 21 gauge or 23 gauge or 25 gauge. Such sharp may be used with a sensor having a width or diameter - - at least the portion that is carried by the sharp - - of about .20 mm to about .80 mm, *e.g.*, about .25 mm to about .60 mm, where in some embodiments the width or diameter of at least a portion of a sensor is .27 mm or .33 mm or .58 mm. In some embodiments, sharp 124 is fabricated from a sheet of metal and folded into a substantially "V" or "U" or "C" configuration in cross-section. Various technologies can be used to manufacture a folded sheet of metal to form sharp 124. For example, etched-sheet metal technology can be used to form the sharp 124. In this manner, the sharp can be formed having a very sharp edge so that penetration through the skin during insertion is less painful. In other embodiments, a progressive die technology may be utilized to form a complex sheet-metal shape that has a sharp edge as depicted in FIGURE 21A. In some embodiments, the sharp 124 can be molded with a plastic cap so that the sharp can be handled during the inserter assembly process. Further, the die cut sharp may be molded with plastic to reinforce the "V," "U," or "C" shaped sheet metal configuration. In other embodiments, a laser-cut sharp can be formed. In this manner, the laser can be used to form the wall opening or gap 162 and first-angled tip portion 164 and a second, steep-angled tip portion 166.

[00178] FIGURES 22-23 illustrate the position of sensor housing 122 with respect to the needle hub 136 and sharp 124. The sensor housing 122 can be configured to hold at least a portion of sensor 14 and sensor control unit 12. As illustrated in FIGURE 22, the sharp 124 extends through an aperture 168 in the sensor housing 122. Thus, in some embodiments, the sharp 124 is uncoupled to sensor housing 122. The distal portion of sensor 14 is positioned with the sharp 124. As further illustrated in FIGURE 23, electronics 80 of the sensor control unit 12 (*e.g.*, a printed circuit board containing electronics components of the on-body unit 16) and sensor hub 123 are positioned within sensor housing 122. Sensor 14 may include a positioning structure, or slit 127 which receives a positioning member, such as tab 129 of sensor hub 123. A power supply 82, such as a battery, *e.g.*, a single use disposable battery, or rechargeable battery, is provided. The power supply 82 is used to provide potential or current to the sensor in some embodiments. In embodiments where a passive communications protocol such as passive RFID is used, no power supply is provided for the communications. Such power is provided by the monitor unit 18. In some embodiments where the sensor control unit is used to transmit one or more signals, one or more power supplies may be used to provide power for such communications circuitry. In some embodiments, the active operational life of the battery may exceed the active operational life of the sensor 14.

[00179] FIGURE 24 illustrates in cross-section the orientation of the sensor housing 122 with respect to the sharp 124 of inserter 100. As discussed herein, sensor 14 is disposed in a substantially bent configuration in some embodiments, such that a portion of the sensor, *e.g.*, the insertion portion 30 and the proximal retention portion 48, are substantially vertical (*e.g.*, substantially aligned with the longitudinal axis of the inserter 100 and substantially perpendicular to the skin surface) and the contact portion 32 (shown in profile) is oriented in a substantially

horizontal configuration, and in electrical contact with the data-processing unit electronics, such as circuit 80. The sensor tab 50 can be encased in the plastic of the sensor housing 122 (*e.g.*, "overmolded") and secured in place. The notch 56 provides further stability to the sensor 14, *e.g.*, by allowing the sensor tab 50 to be encased by the material of the sensor housing 122, and further provides a means for vertically orienting the sensor 14 during mounting, *e.g.*, by allowing vertical positioning of the notch 56 with respect to a vertical landmark of the sensor housing 122.

[00180] The sensor 14, mounted with the sensor housing 122, can be disposed within a recess of the carriage 130 such as a concave recess in the carriage 130. Alternatively, the sensor 14, mounted with the sensor housing 122 can be disposed between the support structure and one or more projections extending from the wall of the sheath. In yet another alternative, the sensor 14 mounted with the sensor housing 122 can be held in position by a releasable friction fit coupling to the sharp 124. In this manner, the carriage need not have a recess within which the sensor mounted with the sensor housing is disposed. In the initial configuration of the inserter 100 (see, *e.g.*, FIGURE 22) the sharp 124 extends through a longitudinal aperture 168 formed in a carriage 130. In some embodiments, the aperture 168 is appropriately sized, such that neither the sharp 124 nor needle hub 136 is in contact with the carriage 130. Accordingly, the needle hub 136 (and sharp 124) on the one hand, and the carriage 130 and the sensor housing 122, on the other hand, move simultaneously but independently from one another. In other embodiments, a friction fit may be provided between the aperture and the sharp.

[00181] The insertion portion 30 and proximal retention portion 48 of the sensor 14 are disposed within a longitudinal bore 162 within the sharp 124 (See, *e.g.*, FIGURE 19). The proximal retention portion 48 is disposed within the longitudinal bore of the sharp 124 and

provides additional stability to the mounting of the sensor 14 within the sharp 124. The longitudinal wall gap or opening 162 of sharp 124 is aligned with the sensor 14, such that the tab 50 and the contact portion 32 extend laterally outward from the sharp 124.

[00182] With continued reference to FIGURES 15 and 16, shuttle 134 includes wings 182 and resilient distally extending fingers 184. Inner rail 128 is illustrated in FIGURE 25. As illustrated in FIGURE 26, shuttle 134 is sized and configured for longitudinal movement within inner rail 128. Wings 182 of shuttle 134 are configured for longitudinal movement within axial notches 188 of inner rail 128. When fingers 184 of shuttle 134 are disposed in their normally biased outward position, fingers 184 engage the lower surface 194 of inner rail 128. In the configuration illustrated in FIGURE 26, shuttle 134 is locked with respect to inner rail 128. As will be discussed herein, fingers 184 may be biased radially inward to allow upward movement of shuttle 134 relative to inner rail 128.

[00183] As illustrated in FIGURE 10, inner rail 128 includes an upper surface 186 for engagement with handle 102. In some embodiments, surface 186 is adhered or otherwise fixed to handle 102.

[00184] The relationship of inner rail 128, shuttle 134 and base 142 is illustrated in FIGURE 27. In an initial configuration, inner rail 128 and shuttle 134 are in a locked relationship by engagement of wings 182 and fingers 184. Inner rail 128 and shuttle 134 are axially movable within base 142. Spring 146, which is secured between spring retention portion 148 of base 142 and wings 182 of shuttle 134 biases the inner rail 128 and shuttle 134 in a proximal (upward) direction.

[00185] Inserter 100 is illustrated in section in FIGURES 28-29 prior to use in a sensor predeployment position. Cap 104 is attached to the distal portion of inserter 100, *e.g.*, *via* inter-engagement of threads 110 and 111.

[00186] As illustrated in FIGURE 28, the inserter 100 includes an initial configuration in which the handle 102 is disposed in a proximal position with respect to the base 142. In such configuration, the sharp 124 is disposed in a configuration spaced apart from an aperture of the adhesive layer 118.

[00187] As illustrated in FIGURE 30, inner rail 128 includes a carriage 130. In a sensor insertion position, the handle 102 is depressed downward (arrow D) against the bias of spring 146, the inner rail 128 moves downwardly with the carriage 130 and the sensor housing 122. Shuttle 134 supports needle hub 136, from which sharp 124 extends longitudinally within the inserter 100. Initially, shuttle 134 is coupled to inner rail 128 *via* inter-engagement of fingers 184 of shuttle 134 with distal surface 194 of inner rail 128, and both shuttle 134 and inner rail 128 move distally together as a unit.

[00188] As the sharp 124 is urged distally (FIGURE 30), it carries the sensor insertion portion 30 of sensor 14 into the subcutaneous portion of the subject's skin S and into contact with the interstitial fluid. As carriage 130 reaches a distal position, the distal surface of the sensor housing 122 engages the upper surface of adhesive pad 118, thereby becoming adhered to the skin surface S of the subject.

[00189] In some embodiments, components are provided which allow the shuttle to be disengaged from the handle 102. For example, flanges 170 on base 142 engage fingers 184 of

shuttle 134. Fingers 184 are pivoted or bend inwards by contact with flanges 170 (as indicated by arrows F).

As illustrated in FIGURE 31, such pivoting of fingers 184 causes fingers 184 to become disengaged from distal edge 194 of inner rail 128. Shuttle 134 is thereby disengaged from inner rail 128. Disengagement of the shuttle 134 from the inner rail 128 permits the spring 146 decompress and to expand, thereby advancing the shuttle 134 to a proximal position, and withdrawing the sharp 124 from the sensor housing 122, including the sensor 14, and the skin S of the subject, while leaving the sensor 14 in the skin and the on body unit 16 on the skin surface. Once the sharp has been withdrawn from the subject, it is no longer accessible from the distal portion of the inserter 100, which prevents accidental needle sticks. When the carriage 130 reaches the distal position in which flanges 170 engage fingers 184 of needle shuttle 134, needle shuttle 134 withdraws sharp 124 automatically without further input from the user.

As illustrated in FIGURE 31A, the inserter 100 may be removed from the skin S of the subject, leaving the on-body unit 16 installed on the subject, e.g., lower surface of housing 122 adhered to the skin S via adhesive pad 118 and sensor 14 at least partially inserted in the skin and in contact with the interstitial fluid.

[00190] Prior to activation of the on-body unit 16 which includes the integrated sensor 14 and sensor control unit 12 for use, there may be a period of time from the manufacturing that the assembly 16 may be in a "sleep" or "idle" mode. With a power supply such as a battery integrated within the assembly, for reasons including cost optimization and prolonging shelf life, some embodiments of the present disclosure include optional systems that are activated merely by positioning the sensor 14 and on-body unit 16 on a skin surface as described above, *i.e.*, no

additional action may be required of the user other than applying a force to sensor housing 122. As such, insertion of the sensor 14 and/or mounting of the sensor housing 122 causes activation of the electronics 80. In certain embodiments, activation switch configurations are included which may be configured to be triggered, for example, by the insertion device activation, thereby turning on the integrated sensor and sensor electronics assembly into an active mode.

[00191] As illustrated in FIGURE 29, inserter 100 may be provided with a switch 185, which provides automatic activation of the electronics 80 of the sensor control unit 12. In some embodiments, the switch 185 is a longitudinally slidable member or plunger extending distally from or otherwise disposed on the distal surface of the sensor housing 122. When the sensor housing is advanced proximally, it engages the adhesive pad 118, or alternatively the skin surface of the subject. Upon such engagement, the switch 185 is moved axially (proximally) with respect to the housing 122. When the sensor housing 122 is in approximation with the adhesive pad 118 and/or the skin of the subject, the plunger switch 185 is in the proximal position (not shown). Such axial movement may be used to activate the sensor electronics 80. In some embodiments, a switch 185 is spring biased. Accordingly, as long as the sensor housing 122 is maintained in a fixed relationship with the adhesive pad 118 against the bias, electronic activation is maintained in such embodiments. If the sensor housing 122 is removed from the adhesive or the skin, the switch 185 moves with the bias, and the electronics are deactivated. In other embodiments, the switch 185 provides a one-time activation of the electronics. In such cases, once the electronics are activated, the sensor housing 122 is not required to remain in contact with the adhesive or the skin in order to maintain activation.

[00192] As illustrated in FIGURES 32-33, embodiments of a power supply switch mechanism include conductive plugs of the on-body unit 16 in accordance with the present disclosure. FIGURES 32-33 illustrate enlarged sectional views of sensor housing 122. As shown, the sensor electronics assembly circuit board 860 may be provided with a physical gap 858 that breaks the electrical circuit between the power supply (*e.g.*, battery) and the other circuitry of the sensor electronics assembly.

[00193] In one embodiment, when the predetermined force is applied on the insertion device 100 as discussed above, a conductive portion 852 provided within the housing 122 of the sensor electronics may be moved in a direction as shown by arrow 854 such that electrical contact is established in the physical gap 858 on the circuit board, by for example, the conductive portion 852 coming into physical contact with the conductive portions of the circuit board 860. In this manner, in one embodiment, the electrical path from the power supply and the remaining circuitry on the circuit board of the sensor electronics is completed, thereby powering the sensor electronics.

[00194] By way of another example, referring to FIGURE 33, the conductive portions 860 of the circuit board are provided on the board itself, and the conductive plug 856, for example, when pushed into the cavity 858, establishes electrical contact between the conductive portions 860 of the circuit board.

[00195] In one embodiment, as discussed above, the actuation of the insertion device 100 to position the sensor 14 and sensor electronics assembly triggers the switch mechanism shown in FIGURES 32-33 by also moving the conductive portion 852 or the conductive plug 856 in the direction complimentary to the direction of the introducer movement, and thereby switching on

the sensor electronics. Within the scope of the present disclosure, the activation of the sensor electronics by moving the conductive portion 852 or the conductive plug 856 may include a separate procedure, where after positioning the sensor and the sensor electronics assembly on the skin surface, a predetermined force is applied on the housing of the integrated sensor 14 and sensor electronics assembly such that the desired movement of the conductive portion 852 or the conductive plug 856 may be achieved. Further embodiments of the insertion devices are described in U.S. Patent Application Serial Nos. 61/149,639, filed February 3, 2009, and No. 12/698,129, filed February 1, 2010, which are incorporated by reference herein in their entirety.

[00196] An inserter 200 in accordance with another exemplary embodiment is illustrated in FIGURE 34. In some embodiments, inserter 200 has a maximum diameter, of about 30mm to about 60 mm, *e.g.*, about 40 mm, about 43 mm, about 43.5 mm, about 50.5 mm, about 54.5 mm, etc. In some embodiments, inserter 200 has a maximum height of about 40 mm to about 80 mm, *e.g.*, about 44 mm, about 46 mm, about 50 mm, about 53 mm, about 67 mm, about 71 mm, etc. In some embodiments, inserter 200 has a volume of about 35 cm^3 to about 110 cm^3, *e.g.*, about 40 cm^3, about 41 cm^3, about 50 cm^3, about 60 cm^3, about 61 cm^3, about 62 cm^3, about 69 cm^3, about 70 cm^3, about 79 cm^3, about 90 cm^3, about 106 cm^3, etc.

[00197] With reference to FIGURE 34, inserter 200 includes a housing 202 and a removable distal cap 204 for maintaining a sterile environment for the medical device and sharp housed therein. Housing 202 and distal cap 204 may be fabricated from any suitable materials such as metal, plastic, etc. In some embodiments cap 204 may be fabricated from a polymer or plastic material. Also provided is a removable proximal cover 206, which, among other things, prevents accidental deployment of the inserter 200. In some embodiments, proximal cover 206 is a sheet

of material such as a foil sheet or the like secured to the upper surface of housing 202 using an adhesive, and may include a tab 208 to assist removal of the cover 206. Proximal cover 206 may also be a plastic sheet or member that forms a seal with housing 202. In some embodiments, proximal cover 206 may include a pull tab or a perforated section for easy removal.

[00198] As illustrated in FIGURE 35, proximal cover 206 and distal cap 204 are shown removed from inserter 200. Distal cap 204 is secured to housing 202, *e.g.*, by use of threads 210. In some embodiments, distal cap 204 is secured by a friction fit, snap fit, a bayonet mount, an adhesive, etc. Housing 202 includes a distal surface 212 for placement on the skin of a subject. Inserter 200 includes an actuator 214 to advance a medical device into the skin of the subject. In some embodiments, actuator 214 is disposed within an opening 216 in housing 202 and can be longitudinally moveable within housing 202.

[00199] The distal portion of inserter 200 is illustrated in FIGURE 36. In some embodiments, an adhesive pad 218, having adhesive material 218 on both faces, is provided across the distal portion 212 of the housing 202. A central aperture 220 may be provided in adhesive pad 218. As will be described in greater detail herein, inserter 200 supports a medical device, such an analyte sensor housing 222 (not shown) and a sharp 224. In some embodiments, sensor housing 122, includes an analyte sensor 14 and a sensor control unit 12. During insertion, sharp 224 passes through aperture 220 and into the skin of the subject carrying at least the sensor with it.

[00200] FIGURE 37 illustrates inserter 200 in cross-section, in an initial configuration prior to use, after removal of the distal cap 204. Actuator 214 may be cylindrical in shape (or other shape as appropriate) and, including an upper contact surface 226, capable of being depressed by a user and/or a mechanism, as described herein. Actuator 214 may further include side walls 228

extending downwardly from upper surface 226, and which engage or otherwise contact the upper surface of carriage 230. Carriage 230 provides a support for holding the medical device, such as sensor housing 122 of on-body unit 16, prior to and during installation. In some embodiments, carriage 230 includes a distal portion 232, which may be configured to form a substantially concave recess 232a as shown in this embodiment, for supporting the medical device therein. In some embodiments, the sensor housing 122 is supported within the recess 232a of carriage 230 in a snap-fit or other relationship. In some embodiments, carriage 230 does not include a recess. In such embodiments, carriage may include one or more projections which contact and/or advance the sensor housing 122.

[00201] In FIGURE 38 the longitudinal axis L of the inserter 200 is illustrated. Extending distally from the upper surface 226 of actuator 214 and substantially parallel to the longitudinal axis is a support member 234, which may have an elongated configuration. Support member 234 supports needle hub 236, from which sharp 224 extends longitudinally within the inserter 200. In some embodiments, the sharp 224 is supported at an oblique angle, *e.g.*, between and including about 0° and 90° with respect to the skin surface. Needle hub 236 can be secured to support member 234 via an interlocking O-ring configuration, adhesive, or other techniques known in the art. Support member 234 can be omitted and needle hub 236 can be secured to the actuator 214 directly in some embodiments.

[00202] In some embodiments, sharp 224 is a solid needle. In some embodiments, sharp 224 is provided with a substantially cylindrical configuration defining an interior bore, *e.g.*, a rigid cylindrical member or a hypodermic-style needle. Sharp 224 may also be provided with an elongated longitudinal opening or gap in the wall of the sharp 224 (see, sharp 224 in FIGURES

22-24). In some embodiments, sharp 224 is a fabricated from a sheet of metal, and folded into a substantially "V" or "U" or "C" configuration in cross-section to define the longitudinal recess.

[00203] The sensor 14, mounted with the sensor housing 122, is carried by the carriage, *e.g.*, disposed within the concave recess 232a in the carriage 230, as described hereinabove (See, *e.g.*, FIGURES 22-24). In the initial configuration of the inserter 200 (see, *e.g.*, FIGURE 37), the sharp 224 extends through a longitudinal aperture 268 formed in the carriage 230. In some embodiments, the aperture 268 is appropriately sized, such that neither the sharp 224 nor needle hub 236 is in contact with the carriage 230. In other words, in some embodiments a clearance may be provided between the surfaces of the carriage and the sharp and needle hub. In some cases, sharp 224 is capable of substantial lateral movement or "play" with respect to aperture 268. Accordingly, the needle hub 236 (and sharp 224) on the one hand, and the carriage 230 and the sensor housing 122, on the other hand, can move simultaneously but independently from one another.

[00204] Referring back to FIGURE 23, the insertion portion 30 and proximal retention portion 48 of the sensor 14 are disposed within a longitudinal bore of the sharp 224. The proximal retention portion 48 is disposed within the longitudinal bore of the sharp 224 and provides additional stability to the disposition of the sensor 14 within longitudinal bore of the sharp 224. The longitudinal wall gap of sharp 224 is aligned with the sensor 14, such that the tab 50 and the contact portion 32 extend laterally outward from the sharp 224.

[00205] With continued reference to FIGURE 37, an optional sheath 242 is positioned within housing 202, having an annular configuration and including a circumferential recess 244 in which a retraction spring 246 is positioned. The distal portion of spring 246 contacts a spring

retention portion 248 in sheath 242. The proximal portion of spring 246 contacts one or more tabs 250 extending laterally outwardly from actuator 214. In the initial configuration, the spring 246 may be in a semi-compressed state, *i.e.*, not fully compressed, nor fully extended. It is understood that sheath 242 may be omitted from inserter 200, and a recess, such as recess 244, provided within housing 202. Similarly, recess 244 may be omitted entirely, and spring 246 or other actuator may be disposed between stops in housing 202.

[00206] Depression of the actuator 214 causes distal longitudinal movement of the carriage 230 and sharp 224, from a proximal position to a distal position. During such downward, distal movement, spring 246 is further compressed between spring retention portion 248 and flanges 250.

[00207] As illustrated in FIGURE 38, depression of the actuator 214 advances the inserter 200 from an initial configuration to a deployed configuration. Depression of the contact surface 226 moves the actuator side walls 228 and the tabs 250 downwardly distally against the bias of spring 246. Contact of the side wall 228 of the actuator 214 with the upper surface of the carriage 230 during depression of the actuator 214 imposes a downward force and consequential distal movement of the carriage 230. As the sharp 224 is urged distally, it carries the sensor insertion portion 30 into the subcutaneous portion of the subject's skin S.

[00208] As illustrated in FIGURE 37, flanges 270 are disposed in the inner wall of sheath 242. When carriage 230 reaches a distal position, as shown in FIGURE 38, the flanges 270 engage the proximal (upper) surface of the carriage 230, and thereby inhibit proximal movement of the carriage 230 (See also FIGURE 41). The distal (lower) surface of the sensor housing 122 engages the upper surface of adhesive pad 218, thereby becoming adhered to the skin surface S

of the subject. As the flanges 270 engage the carriage 230, the flanges 270 also engage fingers 274 disposed on the proximal face of the carriage 230. Fingers 274 are pivoted inwards by flanges 270. Such pivoting of fingers 274 causes fingers 274 to become disengaged from retention tab 250 on actuator 214. Spring 246 is thereby permitted to decompress and expand, and thereby provide an upward force on actuator 214. If the user or some apparatus provides no downward force, or minimal downward force to overcome the bias of spring 246, the actuator 214, along with needle hub 236 and sharp 224 move proximally, withdrawing the sharp 224 from the skin S of the subject.

[00209] As shown in FIGURES 39 and 40, the actuator 214 and coupled sharp 224 is permitted to advance to a more proximal position than at the initial configuration illustrated in FIGURES 35 and 37. Thus the sharp 224 retracts from a distal position to a proximal position after installation of the on body unit and insertion of at least a portion of the sensor. As illustrated in FIGURE 41, the carriage 230 is maintained in a distal position, but the sharp 224 has been withdrawn from the subject and is no longer accessible from the distal portion of the inserter 200, which prevents accidental needle sticks.

[00210] A further embodiment of an inserter is illustrated in FIGURES 42-56 and designated inserter 300. In some embodiments, inserter 300 has a maximum diameter of about 30mm to about 60 mm, *e.g.*, about 40 mm, about 43 mm, about 43.5 mm, about 50.5 mm, about 54.5 mm, etc. In some embodiments, inserter 300 has a maximum height of about 40 mm to about 80 mm, *e.g.*, about 44 mm, about 46 mm, about 50 mm, about 53 mm, about 67 mm, about 71 mm, etc. In some embodiments, inserter 300 has a volume of about 35 cm^3 to about 110 cm^3, *e.g.*, about

40 cm^3, about 41 cm^3, about 50 cm^3, about 60 cm^3, about 61 cm^3, about 62 cm^3, about 69 cm^3, about 70 cm^3, about 79 cm^3, about 90 cm^3, about 106 cm^3, etc.

[00211] As illustrated in FIGURE 42-43, inserter 300 includes, *e.g.*, a handle 302, a sheath 342, and a removable distal cap 304 for maintaining a sterile environment for the medical device and sharp housed therein. FIGURE 43 illustrates that distal cap 304 is removed from handle 302. Distal cap 304 is secured to handle 302 by one of a number of securement means, *e.g.*, by use of threads 310. Sheath 342 defines a distal surface 312 for placement on the skin of a subject. Inserter 300 may be utilized to advance a medical device into the skin of the subject. In some embodiments, handle 302 is advanced relative to sheath 342 in order to advance the medical device into the skin of the patient.

[00212] The components of inserter 300 are illustrated in FIGURES 44-49. As illustrated in FIGURE 44, handle 302 may include threads 310 for attachment of cap 304 via threads 311 (as illustrated in FIGURE 46). It is understood that other securement techniques, such as a snap-fit or friction-fit may be used to secure cap 304. Cap 304 may include a receptacle 325 for positioning of the sharp 324. Sheath 342, as illustrated in FIGURE 45, includes longitudinal notches 382.

[00213] Projections 386 on carriage 330, as illustrated in FIGURE 47, , are configured to engage sheath to secure carriage 330 within the inserter 300, thereby preventing release of the carriage from the inserter. Notches 384 allow for the free travel of projections 386. The bottom of the notches acts as the retention portion that prevents the carriage 330 from falling out of the inserter 300. Projections 375 engage with the triangular latch features 370 of the sheath 342 as illustrated in FIGURES 51 and 53.

[00214] . Carriage 330 also is provided with fingers 374 which engage a shoulder wall 376 of handle 302 (as illustrated in FIGURE 51), as will be described in greater detail herein.

[00215] Inserter 300 also includes a spring retention component 348, as illustrated in FIGURE 48. Spring retention component 348 defines an upper surface 349, which engages spring 346 (as illustrated in FIGURE 51). Spring retention component 348 also includes locking towers 351, which engage flanges 328 of needle carrier 334 to prevent accidental deployment of the sharp 324 after use of the inserter 300 is completed.

[00216] Inserter 300 is illustrated in cross-section in FIGURE 50 prior to use. Cap 304 is attached to the distal portion of inserter 300, via securement means, such as inter-engagement of threads 310 and 311. Cap 304 includes a desiccant tablet 390; a seal, such as a foil seal 392; and a Tyvek® layer 394, which allows breathability between the desiccant tablet 390 and the interior of the inserter 300.

[00217] As illustrated in FIGURE 51, the inserter 300 includes an initial configuration in which the handle 302 is disposed in a proximal position with respect to the sheath 342. In such configuration, the sharp 324 is disposed in a configuration spaced apart from the aperture 320 of the adhesive layer 318. The distal portion of inserter 300 is illustrated in FIGURE 52.

[00218] With continued reference to FIGURE 51, the longitudinal axis L of the inserter 300 is illustrated. Extending distally from the upper surface of handle 302 is an inner wall portion 326 and intermediate wall portion 374. Support member 334 extends from wall portion 326 and supports needle hub 336, from which sharp 324 extends longitudinally within the inserter 300. In some embodiments, the sharp is supported at an oblique angle, *e.g.*, between 0° and 90° with respect to the skin surface.

[00219] Sheath 342 is positioned within handle 302, having an annular configuration in which a retraction spring 346 is positioned. The distal portion of spring 346 contacts a surface 349 of spring retention component 348. The proximal portion of spring 346 contacts the inner surface 350 of handle 302. In the initial configuration, the spring 346 is in an extended or semi-extended configuration.

[00220] FIGURE 53 illustrates inserter 300 in cross-section, during insertion. Depression of handle 302 with respect to sheath 342 against the bias of spring 346 causes distal longitudinal movement of the carriage 330 and sharp 324, from a proximal position towards a distal position. During such downward, distal movement, spring 346 is compressed between surface 349 of spring retention component 348 and surface 350 of handle 302. As the sharp 324 is urged distally, it carries the sensor insertion portion 30 of sensor 14 into the subcutaneous portion of the subject's skin S.

[00221] As carriage 330 reaches a distal position, the distal surface of the sensor housing 122 engages the upper surface of adhesive pad 318, thereby becoming adhered to the skin surface S of the subject. Also, flange 370 engages fingers 374 disposed on the carriage 330. Fingers 374 are pivoted outwards by flanges 370 in direction T. Such pivoting of fingers 374 causes fingers 374 to become disengaged from slots 376 in intermediate housing walls 374. Carriage 330 is thereby disengaged from handle 302 and needle carrier 334.

[00222] As illustrated in FIGURE 54, handle 302, along with needle hub 336 and sharp 324 are permitted to move proximally, while the sheath 342 and sensor housing 122 remain adjacent to the skin of the subject. If the user or some apparatus provides no downward force, or minimal

downward force to the handle 302 to overcome the bias of spring 346, spring 346 is permitted to expand, thereby withdrawing the sharp 324 from the skin S of the subject.

[00223] Upon reaching the proximal position, flanges 328 on needle carrier 334 engage locking towers 351 of needle floor component 348. The inter-engagement of flanges 328 and locking towers 351 prevents inadvertent deployment of sharp 324 after installation of the medical device.

[00224] As shown in FIGURES 55 and 56, the carriage 330 is maintained in a distal position, but the sharp 324 has been withdrawn from the subject and is no longer accessible from the distal portion of the inserter 300, which prevents accidental needle sticks.

[00225] A further embodiment of an inserter is illustrated in FIGURES 57-67, and designated inserter 400. In some embodiments, inserter 400 has a maximum diameter of about 30mm to about 60 mm, *e.g.*, about 40 mm, about 43 mm, about 43.5 mm, about 50.5 mm, about 54.5 mm, etc. In some embodiments, inserter 400 has a maximum height of about 40 mm to about 80 mm, *e.g.*, about 44 mm, about 46 mm, about 50 mm, about 53 mm, about 67 mm, about 71 mm, etc. In some embodiments, inserter 400 has a volume of about 35 cm^3 to about 110 cm^3, *e.g.*, about 40 cm^3, about 41 cm^3, about 50 cm^3, about 60 cm^3, about 61 cm^3, about 62 cm^3, about 69 cm^3, about 70 cm^3, about 79 cm^3, about 90 cm^3, about 106 cm^3, etc.

[00226] Inserter 400 generally includes, *e.g.,* a handle 402, sheath 442, and a removable distal cap 404 for maintaining a sterile environment for the medical device and sharp housed therein. As illustrated in FIGURE 58, distal cap 404 is shown removed from handle 402. Distal cap 404 is detachably secured to handle 402, *e.g.*, by use of threads 410. Sheath 442 includes a distal surface 412 for placement on the skin of a subject. Inserter 400 may be utilized to advance a

medical device into the skin of the subject. In some embodiments, handle 402 is advanced relative to sheath 442 in order to advance the medical device distally and into the skin of the patient.

[00227] The components of inserter 400 are illustrated in FIGURES 59-63. As illustrated in FIGURE 59, handle 402 includes threads 410 for attachment of cap 404 via threads 411 (as illustrated in FIGURE 61). Cap 404 may include a receptacle 425 for positioning of the sharp 424. Sheath 442, as illustrated in FIGURE 60, includes longitudinal notches 482. Projections 486 on carriage 430, as illustrated in FIGURE 62, are configured to engage sheath 442 to secure carriage 430 within inserter 400, thereby preventing release of the carriage from the inserter. Sheath 442 also includes notches 484 which receive projection 475 of carriage 430. Notches 484 allow for the free travel of projections 486. The bottom of the notches acts as the retention portion that prevents the carriage 430 from falling out of the inserter 400. Projections 475 engage with the latch features 470 of the sheath 442 as illustrated in FIGURES 66 and 67. Carriage 430 also is provided with fingers 474 which engages a shoulder wall 476 of needle carrier 436, as illustrated in FIGURES 65-66, and as will be described in greater detail herein.

[00228] Sheath 442 also includes a spring retention portion 448, provided at the distal end of circumferential notch 496, as illustrated in FIGURES 60, 64 and 65. Needle carrier 434, as illustrated in FIGURE 63, includes wings 450, which provide an upper engagement surface for spring 446. Wings 450 also include recesses 451 including a shoulder 476 for engagement with fingers 474 of carriage 430.

[00229] Inserter 400 is illustrated in cross-section in FIGURE 64 in a state prior to use and prior to removal of cap 404, which is shown attached to the distal portion of handle 402, via

inter-engagement of threads 410 and 411. Cap 404 includes a desiccant tablet 490, a seal such as a foil seal 492, and a Tyvek® layer 494, which allows breathability between the desiccant tablet 490 and the interior of the inserter 400.

[00230] As illustrated in FIGURE 65, the inserter 400 is shown in an initial configuration in which handle 402 is disposed in a proximal position with respect to the sheath 442. In such configuration, the sharp 424 is disposed in a configuration spaced apart from the aperture 420 of the adhesive layer 418. The longitudinal axis L of the inserter 400 is illustrated. Extending distally from the upper surface of handle 402 is inner wall 475. The distal end portions of wall 475 provide a downward force on the carriage 430 upon depression of the handle 402 by a user. Alternatively, instead of handle having a distally extending inner wall, the carriage can include one or more upwardly extending walls or projections(not shown). The one or more upwardly extending inner walls or projections can have a length sufficient to either contact the upper surface of 402 or, alternatively, contact corresponding downwardly extending inner walls of the handle 402. In this manner, depression of handle 402 by a user provides a downward force on the one or more upwardly extending walls or projections of the carriage to advance the carriage (and on-body unit) distally to an installation and insertion position. In one embodiment a downwardly extending wall of the handle 402 and a corresponding upwardly extending wall of the carriage are aligned such that depression of the handle 402 by a user allows the upwardly extending wall and the downwardly extending wall to make direct contact, thereby permitting the carriage 430 and on body unit to advance distally. In such embodiment, the downwardly extending inner wall of the handle has a distal end that is disposed proximally of the proximal most end of sheath 442.

[00231] Needle carrier 434 can be axially moveable within handle 402. Needle carrier 434 supports needle hub 436, from which sharp 424 extends longitudinally within inserter 400. In some embodiments, sharp 424 is supported at an oblique angle, *e.g.*, between and including about 0° and 90° with respect to the skin surface. Initially, needle carrier 434 is coupled to carriage 430 via inter-engagement of fingers 474 of carriage 430 with shoulder 476 of needle carrier 434. Spring 446 is disposed between spring retention portion 448 of sheath 442 and wings 450 (FIGURE 63) of needle carrier 434. Initially, spring 446 is in an expanded or semi-expanded state while handle 402 is disposed proximally from sheath 442. In another exemplary embodiment, needle carrier 434 can be secured to handle 402, for example, secured to downwardly extending inner wall 475. In this manner, needle carrier and carriage 430 are longitudinally moveable with respect to sheath 442. In this regard, needle carrier 434 includes one or more apertures to receive one or more downwardly extending inner walls 475 of handle 402. In some embodiments, neither the needle carrier 434 nor the carriage 430 are in slidable contact with sheath 442, e.g., spaced apart from sheath 442, during longitudinal movement of the needle carrier 434 and/or carriage 430.

[00232] FIGURE 66 illustrates inserter 400 in cross-section, during insertion. Depression of handle 402 with respect to sheath 442, against the bias of spring 446, causes distal longitudinal movement of the carriage 430 and needle carrier 434, from a proximal position towards a distal position. During such downward proximal movement, spring 446 is compressed between spring retention portion 448 and wings 450 (FIGURE 63) of needle carrier 434. As the sharp 424 is urged distally, it carries the sensor insertion portion 30 of sensor 14 (FIGURE 23) into the subcutaneous portion of the subject's skin S.

[00233] As carriage 430 reaches a distal position, the distal surface of the sensor housing 122 engages the upper surface of adhesive pad 418, thereby becoming adhered to the skin surface S of the subject. Flange 470 engages fingers 474 disposed on the carriage 430. Fingers 474 are pivoted outwards by flanges 470 in direction T. Such pivoting of fingers 474 causes fingers 474 to become disengaged from shoulder 476 of needle carrier 434. Needle carrier 434 is thereby disengaged from carriage 430.

[00234] As illustrated in FIGURE 67, disengagement of the needle carrier 434 from the carriage 430 permits the spring 446 to expand, thereby advancing the needle carrier 434 to a proximal position and withdrawing the sharp 424 from the skin S of the subject while leaving the sensor 14 in the skin. Once the sharp 424 has been withdrawn from the subject, it is no longer accessible from the distal portion of the inserter 400 and unable to make contact by accident with the subject's skin because it is positioned at a proximal position within the carrier handle 402.

[00235] A further embodiment of an inserter is illustrated in FIGURES 68-71 and designated inserter 500. In some embodiments, inserter 500 has a maximum diameter of about 30 mm to about 60 mm, *e.g.*, about 40 mm, about 43 mm, about 43.5 mm, about 50.5 mm, about 54.5 mm, etc. In some embodiments, inserter 500 has a maximum height of about 40 mm to about 80 mm, *e.g.*, about 44 mm, about 46 mm, about 50 mm, about 53 mm, about 67 mm, about 71 mm, etc. In some embodiments, inserter 500 has a volume of about 35 cm^3 to about 110 cm^3, *e.g.*, about 40 cm^3, about 41 cm^3, about 50 cm^3, about 60 cm^3, about 61 cm^3, about 62 cm^3, about 69 cm^3, about 70 cm^3, about 79 cm^3, about 90 cm^3, about 106 cm^3, etc.

[00236] Inserter 500 includes, *e.g.,* a bellows portion 502, a sheath 542, and a removable distal cap 504 for maintaining a sterile environment for the medical device and sharp housed

therein. As illustrated in FIGURE 69, distal cap 504 is shown removed from sheath 542. Sheath 542 defines a distal surface 512 for placement on the skin of a subject. Inserter 500 may be utilized to advance a medical device into the skin of the subject. In some embodiments, bellows portion 502 is compressed in order to advance the medical device into the skin of the subject. Bellows portion 502 includes a series of concentric folds, including raised portions 516 and folded portions 518.

[00237] Inserter 500 is illustrated in cross-section in FIGURE 70 prior to use and prior to removal of cap 504, which is attached to sheath 542 via inter-engagement of threads 510 on sheath and threads 511 on cap 504. Cap 504 includes a desiccant tablet 590. Cap 504 may further include a receptacle for maintaining the position of the sharp 524 within the sheath 542 prior to use.

[00238] As illustrated in FIGURE 70, the inserter 500 includes an initial configuration in which the bellows portion 502 is disposed in a relaxed, extended position. In such configuration, the sharp 524 is disposed in a position spaced apart from the aperture 520 of the adhesive layer 518. The proximal end portion of the housing includes a button or actuator portion 514. Extending distally from the actuator portion 514 are side walls 528 and needle hub 536. Downward force on the actuator portion 514 causes a downward force on the needle hub 536 and on the carriage 530 (through coupling to side walls 528). Carriage 530 includes a recess 532 for reception of the sensor housing 122 therein. Sharp 524 extends longitudinally from needle hub 536 within the inserter 500. In some embodiments, the sharp is supported at an oblique angle, *e.g.*, between including about 0° and 90° with respect to the skin surface.

[00239] FIGURE 71 illustrates inserter 500 in cross-section, during insertion. Depression of bellows portion 502 with respect to sheath 542 against the bias of spring 546 causes distal longitudinal movement of the carriage 530 and sharp 524 from a proximal position toward a distal position. During such downward, proximal movement, spring 546 is compressed between an upper (proximal) portion adjacent to actuator 514 and a lower (distal) portion adjacent to sheath 542. As the sharp 524 is urged distally, it carries the sensor insertion portion 30 of sensor 14 (FIGURE 23) into the subcutaneous portion of the subject's skin S.

[00240] By removing downward force on the actuator portion 514, the bias of spring 546 provides an upward (proximal) force, which permits sharp 524 to withdraw from the skin S of the subject. Once the sharp 524 has been withdrawn from the subject, it is no longer accessible from the distal portion of the inserter 500, and unable to make contact by accident with the subject's skin.

[00241] A further embodiment of an inserter is illustrated in FIGURES 72-75. An inserter 900 includes a handle 902 and may include a removable distal cap or seal (not shown) for maintaining a sterile environment for the medical device and sharp housed therein. As illustrated in FIGURE 72, distal cap or seal is removed from handle 902. Inserter 900 includes a base 942 that defines a distal surface 912 for placement on the skin of a subject. Inserter 900 may be utilized to advance a medical device into the skin of the subject. In some embodiments, handle 902 is advanced relative to base 942 in order to advance the medical device into the skin of the patient.

[00242] As illustrated in FIGURE 73, the inserter 900 includes an initial configuration in which the handle 902 is disposed in a proximal position with respect to the base 942. In such

configuration, the sharp 924 is disposed in a configuration spaced apart from the aperture 920 of the adhesive layer 918. Extending distally from the upper surface of handle 902 are side walls 974, which terminate in a shoulder portion 975.

[00243] Needle carrier 934 is axially slidable within handle 902 and base 942. Needle carrier 934 supports needle hub 936, from which sharp 924 extends longitudinally within the inserter 900. In some embodiments, the sharp is supported at an oblique angle, *e.g.*, between including about 0° and 90° with respect to the skin surface. Initially, needle carrier 934 is coupled to inner rail 928 via inter-engagement of finger 986 of needle carrier 934 with shoulder 987 of inner rail.

[00244] Inserter 900 includes an advancement spring 947. Inner rail 928 includes a spring retention portion 984 for advancement spring 947. The inner surface of handle 902 serves as an upper engagement surface for advancement spring 947. In some embodiments, spring retention portion 984 is fabricated having several projections that extend through an aperture 982 in the wall of base 942. Spring retention portion 984 is resiliently movable. As downward force is applied to handle 902, the shoulder portions 975 of handle 902 contact spring retention portion 984, driving such projections inward. Such inward motion releases the inner rail 928, and allows advancement spring 947 to advance the inner rail 928 distally, thereby advancing the sharp 924 into the skin of the subject, as illustrated in FIGURE 74.

[00245] Retraction spring 946 is disposed between spring retention portion 948 of base 942 and shoulder portion 949 of needle carrier 934. Initially, retraction spring 946 is in a compressed state. As carriage 930 reaches a distal position, the distal surface of the sensor housing 122 engages the upper surface of adhesive pad 918, thereby becoming adhered to the skin surface S of the subject. At the same time, flanges 970 of base 942 engage fingers 986 disposed on the

shuttle 934. Fingers 986 are pivoted outwards by flanges 970. Such pivoting of fingers 974 causes fingers 986 to become disengaged from shoulder 984 of inner rail 928. Shuttle 934 is thereby disengaged from inner rail 928.

[00246] As illustrated in FIGURE 75, disengagement of the shuttle 934 from the inner rail 928 permits the spring 946 to expand, thereby advancing the needle carrier 934 to a proximal position, thereby withdrawing the sharp 934 from the skin S of the subject, while leaving the sensor 14 in the skin. Once the sharp has been withdrawn from the subject, it is no longer accessible from the distal portion of the inserter 900, and unable to make contact by accident with the subject's skin.

[00247] A further embodiment of an inserter is illustrated in FIGURES 76-79 and designated inserter 1000. An inserter 1000 includes a housing 1002, and may include a removable distal cap or seal (not shown) for maintaining a sterile environment for the medical device and sharp housed therein. As illustrated in FIGURE 76, distal cap or seal is removed from housing 1002. Inserter 1000 includes a base 1042 which defines a distal surface 1012 for placement on the skin of a subject. Inserter 1000 may be utilized to advance a medical device into the skin of the subject. In some embodiments, side buttons 1084 are depressed relative to base 1042 in order to advance the medical device into the skin of the patient.

[00248] As illustrated in FIGURE 77, the inserter 1000 includes an initial configuration in which the sharp 1024 is disposed in a configuration spaced apart from distal portion 1012 of the base 1042. It is understood that inserter 1000 may incorporate an adhesive layer (not shown) positioned across the distal portion 1012 of base 1042.

[00249] On-body unit inserter 1028 includes carriage 1030 for supporting sensor housing 122. On-body unit inserter 1028 also includes flange 1029 which normally rests on shoulder portions 1086 (as illustrated in FIGS. 76-77). When side buttons 1084 are depressed inwardly, latch portions on flange 1029 are deflected from engagement with shoulder portions 1086. As illustrated in FIGURE 78, advancement spring 1047 is released from compression, thereby advancing on-body unit inserter 1028, along with needle carrier 1034 into the skin of the subject.

[00250] Retraction spring 1046 is disposed between needle carrier 1036 and housing 1002. Initially, retraction spring 1046 is in a compressed state. As carriage 1028 reaches a distal position, on-body unit inserter 1028 is disengaged from shuttle 1036. The distal surface of the sensor housing 122 engages the skin or the upper surface of adhesive pad (not shown), thereby becoming adhered to the skin surface S of the subject. Latches on needle carrier 1036 attach it to on-body unit inserter 1028. Upon firing the inserter by pressing tabs 1084, the on-body unit inserter 1028 is pushed by spring 1047 towards the skin surface S, bringing along needle carrier 1036 and loading extension spring 1046. As on-body unit inserter 1028 reaches the distal position, protrusions on housing 1002 disengage latches on needle carrier 1036, connecting it to on-body unit inserter 1028. Extension spring 1046 now pulls needle carrier 1036 back into the proximal position.

[00251] As illustrated in FIGURE 79, disengagement of the shuttle 1034 from the inner rail 1028 permits the spring 1046 to contract with the bias, thereby advancing the needle carrier 1034 to a proximal position and withdrawing the sharp 1024 from the skin S of the subject, while leaving the sensor 14 in the skin. Once the sharp has been withdrawn from the subject, it is no

longer accessible from the distal portion of the inserter 1000, and unable to make contact by accident with the subject's skin.

[00252] A further embodiment of an inserter is illustrated in FIGURES 80-83. An inserter 1100 includes a housing 1102 and may include a removable distal cap or seal (not shown) for maintaining a sterile environment for the medical device and/or sharp housed therein. As illustrated in FIGURE 80, distal cap or seal is removed from housing 1102. Inserter 1100 includes a base 1142 which defines a distal surface 1112 for placement on the skin of a subject. Inserter 1100 may be utilized to advance a medical device into the skin of the subject. In some embodiments, a manual actuator bar 1114 is depressed relative to base 1142 in order to advance the medical device into the skin of the patient. It is understood that inserter 1100 may incorporate an adhesive layer (not shown) which is positioned across the distal portion 1112 of base 1142.

[00253] As illustrated in FIGURE 81, the inserter 1100 includes an initial configuration in which the sharp 1124 is disposed in a configuration spaced apart from distal portion 1112 of the base 1142. Manual advancement of the actuator may be performed by distal advancement of actuator bar 1114.

[00254] On-body unit inserter 1128 includes carriage 1130 for supporting sensor housing 122. Retraction spring 1146 is disposed between needle carrier 1136 and base 1102. Initially, retraction spring 1146 is in a compressed state. As actuator bar 1114 is moved distally (manually or by use of a driver apparatus, *e.g.,* driver apparatus 700, 3800, 900) carriage 1128 is moved distally and reaches a distal position, such that flanges 1170 of base 1142 engage fingers 1186 disposed on the shuttle 1134. Fingers 1186 are pivoted outwards by flanges 1170. Such

pivoting of fingers 1186 causes fingers 1186 to become disengaged from shoulder 1187 of inner rail 1128. Shuttle 1134 is thereby disengaged from inner rail 1128. The distal surface of the sensor housing 122 engages the skin or the upper surface of adhesive pad (not shown), thereby becoming adhered to the skin surface of the subject. (FIGURE 82.)

[00255] As illustrated in FIGURE 83, disengagement of the shuttle 1136 from the inner rail 1028 permits the spring 1146 to expand with the bias, thereby advancing the needle carrier 1136 to a proximal position and withdrawing the sharp 1124 from the skin S of the subject, while leaving the sensor 14 (FIGS. 7-9) in the skin. Once the sharp 1124 has been withdrawn from the subject, it is no longer accessible from the distal portion of the inserter 1100, and unable to make contact by accident with the subject's skin.

[00256] A further embodiment of an inserter is illustrated in FIGURES 84-93. Inserter 1200 includes a housing 1202, an on-body unit inserter 1228, a needle retractor 1234, and a rotor 1208 with a torsion spring (not shown), all of which are depicted separately in FIGURES 86-89. As illustrated in FIGURES 86-89, housing 1202 includes slots 1254; on-body unit inserter 1228 includes slots 1252, tabs 1253, and opening 1262; needle retractor 1234 includes tabs 1250 and opening 1260; and rotor 1208 includes rotor follower 1264.

[00257] FIGURE 89A illustrates an exploded view of inserter 1200. As illustrated, in some embodiments, inserter 1200 includes housing 1202, on-body unit inserter 1228, needle retractor 1234, and rotor 1208. Tabs 1250 can be disposed on needle retractor 1234 and configured to engage slots 1252 disposed on on-body unit inserter 1228 when assembled as shown in FIGURE 90. Tabs 1253 can be disposed on on-body unit inserter 1228 and can be configured to engage slots 1254 disposed on housing 1202. Needle retractor 1234 and on-body unit inserter 1228 can

each contain openings (1260, 1262) to receive rotor follower 1264 disposed on rotor 1208 after rotor 1208 has been inserted into housing 1202. Additionally, on-body unit inserter 1228 can provide support for sensor housing 122 (not shown) for installation to the skin of a subject.

[00258] As illustrated in FIGURE 91, in some embodiments manually depressing the on-body unit inserter 1228 can cause the torsion spring to wind as the rotor 1208 rotates, guided by the cam path. As illustrated in FIGURE 92, continued distal advancement of the on-body unit inserter 1228 causes the rotor follower 1264 to go "over center" within cam 1264. At such point, the torsion spring (not shown) is allowed to unwind. (FIGURE 93). With reference to FIGURE 93, further unwinding of the torsion spring pulls up the needle retractor 1234 from the insertion site, while leaving the on-body unit inserter in place.

[00259] A further embodiment of an inserter is illustrated in FIGURES 94-100. Inserter 1300 includes a housing 1302, an on-body unit inserter 1334, a needle retractor 1334, and a rotor 1308 with torsion spring 1367. As illustrated in FIGURES 94, 95, 95A, 99A and 100, the on-body unit inserter 1334 and needle retractor 1328 are disposed within the housing 1302. Rotor 1308 includes a rotor follower 1364 which engages a slot 1362 provided in the needle retractor 1328 and a slot 1360 provided in the on-body unit inserter 1334. The on-body unit inserter 1334 provides a support portion for supporting sensor housing 1302 (not shown).

[00260] In operation, torsion spring 1365 is loaded. A release button (not shown) is depressed in order to release torsion spring 1365. Rotor 1308 drives on-body unit inserter 1334 and needle retractor 1328 downwardly simultaneously. A compression spring 1367 holds down on-body unit inserter 1334. As rotor 1308 continues to rotate, slot 1360 allows on-body unit inserter 1334

to travel down and then be held down, while slot 1362 allows needle retractor 1328 to travel down and then back up to lift the needle from insertion site.

[00261] A further embodiment of an inserter is illustrated in FIGURES 101-105. Inserter 1400 may be used for installation of a medical device, *e.g.*, a sensor housing, in connection with a cartridge or carrier 1406. In some embodiments, inserter 1400 includes a body 1402 and an actuator 1404. The carrier 1406 may include a needle hub 1436 including a sharp (not shown) as well as a sensor housing, substantially identical to sensor housing 122 described herein. In use, the body 1402 is placed on a mount 1408 attached to subject by use of an adhesive pad 1418. As shown in FIGURE 101, carrier 1406 is loaded into inserter 1400 laterally as shown.

[00262] With reference to FIGURE 102, a first disposable portion of inserter 1400 includes adhesive pad 1418 and mount 1408. The second disposable portion of inserter 1400 includes carrier 1406 which removably contains needle hub 1436 and the sensor housing. Inserter 1400 further includes body 1402, actuator 1404, and return spring 1409 (not shown). Mount 1408 is removably attached to body 1402 by a user. Carrier 1406 can be slid onto body 1402 to transfer needle hub 1436 and sensor housing from carrier 1406 to inserter 1400. As shown in FIGURE 102, carrier 1406 can then be removed from inserter 1400. Needle hub 1436 and the sensor housing are initially disposed in inserter 1400. Adhesive pad 1418 is then adhesively applied to the skin of a user. Alternatively, adhesive pad 1418 may be applied to the skin of a subject before attaching body 1402 and mount 1408.

[00263] In FIGURE 103, actuator 1404 is pressed down, performing a manual insertion of needle hub 1436 and the sensor housing, with the needle located in needle hub 1436 and the insertion portion of the sensor penetrating the skin of the subject. Sensor housing is advanced

towards the mount 1408. When pressure is released from actuator 1404, return spring 1409 (not shown) retracts the needle from the skin of the subject and out of the sensor housing. As shown in FIGURE 104, body 1402 can be removed from mount 1408, leaving the sensor housing in mounting base 1408. In FIGURE 105, in some exemplary embodiments, carrier 1406 is slid on to housing 1402, transferring needle 1436 to carrier 1406. Carrier 1406, with needle 1436, is then removed from housing 1402 and may be disposed of properly, and inserter 1400 is ready to be used again with another insertion set. In some embodiments, a sensor housing is provided which does not include communications electronics. In such embodiments, communication electronics (not shown) are then attached to mounting base 1408, making electrical contact with sensor housing.

[00264] A further embodiment of an inserter is illustrated in FIGURE 106. Inserter 1500 includes a housing 1502, which may be fabricated as a molded plastic tube and may further include a living hinge cap 1504. In some embodiments, a living hinge is a thin flexible plastic junction that connects two mating parts. The hinge keeps the parts attached and may be folded completely without failure to allow the two parts to fully mate.

[00265] Cap 1504 may be further provided with a cutout portion to provide access to the index finger and restrict the insertion motion along a desired axis. Cap 1504 is closed up and bonded to the housing via chemical or ultrasonic bonding after the bellow-button assembly (described herein) is provided.

[00266] Inserter further includes bellows 1506, which in some embodiments is constructed from molded thin wall plastic with an integrated compression spring which collapses during the insertion action, and which provides the force to retract sharp 1524 after insertion. Bellows 1506

also hides sharp 1524 from the user. The top portion 1520 of the bellows 1506 is secured to button 1514, and bottom portion 1521 is secured to housing 1502.

[00267] A button 1514 provides the capability of the user to insert sensor housing 122 into the skin of the subject. Button 1514 may be fabricated from plastic and may further include anti-rotation features, *e.g.*, recess 1515, as well as anti-rocking and guiding features restricting linear motion in the desired axis. Needle hub 1536 or luer is glued or directly molded onto button 1514. Sharp 1524 is securely held on to sensor housing 122, as described herein. (See, *e.g.*, FIGURES 22-24.)

[00268] An adhesive patch 1518 secures sensor housing 122 to the skin of the subject. In some embodiments, the adhesive patch 1518 includes a high-tack (*i.e.*, high strength adhesive) region for contact with the skin. A protective liner is provided for removal prior to insertion. On the side of the adhesive patch facing inserter 1500, low-tack region 1530 is provided on the periphery of the patch allow easy removal of housing 1502 after insertion is completed. A high-tack region 1532 is provided in the center portion of the patch to secure sensor housing 122 in place.

[00269] Referring to FIGURES 107-109, inserter kit 1600 is illustrated with inserter 2310 and an adhesive mount 2312 removably attached to the bottom thereof. Inserter 1600 is further described in U.S. Patent No. 7,381,184, which is incorporated by reference herein for all purposes.

[00270] After preparing an insertion site on the skin, typically in the abdominal region, the user removes a liner (not shown) from adhesive mount 2312 to expose the bottom surface and a portion of the top surface of an adhesive tape 2320 located beneath mount 2312. Mount 2312,

with inserter 2310 attached, is then applied to the subject's skin at the insertion site. Actuator button 2324 is depressed, causing inserter 2310 to fire, thereby inserting sensor 2314 into the subject's skin with a predetermined velocity and force. Once sensor 2314 has been inserted into the skin, the patient removes inserter 2310 from mount 2312 by pressing release tabs (not shown) on opposite sides of inserter 2310 and lifting inserter 2310 away from mount 2312.

[00271] Once inserter 2310 is removed from mount 2312, communications electronics (not shown) can be slid into place. The circuitry of the communications electronics device makes electrical contact with the contact pads on sensor 2314 after the communications electronics is fully seated on mount 2312. Once initialization and synchronization procedures are completed, electrochemical measurements from sensor 2314 can be sent wirelessly from the communications electronics to a receiver unit

[00272] In some embodiments, inserter kit 1600 is assembled from the following components: housing 2334, actuator button 2324, drive spring 2336, shuttle 2338, introducer sharp 2340, sensor 2314, retraction spring 2342, inserter base 2344, upper liner (not shown), adhesive mount 2312, adhesive tape 2320, and lower liner (not shown).

[00273] Shuttle 2338 is slidably and non-rotabably constrained on base 2344 by arcuate guides 2360. Shuttle 2338 is generally formed by an outer ring 2362 and an inner cup-shaped post 2364 connected by two bridges 2366. Bridges 2366 slide between the two slots (not shown) formed between guides 2360 and allow shuttle 2338 to travel along guides 2360 without rotating. Retraction spring 2342 is captivated at its outer circumference by guides 2360, at its bottom by the floor 2370 of base 2344, at its top by bridges 2366, and at its inner circumference by the outer surface of shuttle post 2364. Drive spring 2336 is captivated at its bottom and outer

circumference by the inside surface of shuttle post 2364, at its top by the ceiling 2372 inside actuator button 2324, and at its inner circumference by stem 2374 depending from ceiling 2372. When drive spring 2336 is compressed between actuator button 2324 and shuttle 2338 it urges shuttle 2338 towards base 2344. When retraction spring 2342 is compressed between shuttle 2338 and base 2344, it urges shuttle 338 towards actuator button 324.

[00274] Retraction spring 2342 will return shuttle 2338 to the neutral position as shown after firing, but without sensor 2314 which remains inserted in subject's skin. Drive spring 2336 is preferably designed to be stiffer than retraction spring 2342 so that shuttle 2338 oscillations are quickly dampened out, and so introducer sharp 2340 does not return to sensor 2314 or the patient to cause injury. With sensor 2314 inserted in the subject's skin, inserter 2310 can be removed from mount 2312 and then lifting inserter 2310 away from mount 2312. Introducer sharp 2340 remains protected inside housing 2334 during disposal of inserter 2310. Communications electronics can now be slid into place on mount 2312 as previously described.

[00275] In some embodiments, a proximal portion of stem 2374 is enlarged to create an interference fit with the coils of spring 2336. For example, one or more laterally extending ribs 2610 are added to stem 2374. The interference fit between ribs 2610 and spring 2336 is typically provided at the proximal (top) coils of spring 2336.

[00276] The diameter of the coils of spring 2336 increases slightly when compressed and decreases slightly when extended. Ribs 2610 on stem 2374 provide greatest interference when spring 2336 is extended. The interference fit provides increased stability of shuttle 2338 during insertion. In some embodiments, the interference fit prevents or minimizes distal movement of

spring 2336, which may cause impact of spring 2336 against shuttle 2338 and the end of the distal travel of these components.

[00277] Referring to FIGURES 110-112C, in another exemplary embodiment, inserter 2600 generally includes: actuator button 2602 (FIGURE 110A), shuttle 2604 (FIGURE 110B), inserter sharp 2610 with skin piercing edge 2612 (FIGURE 110B), retraction spring 2608 (FIGURE 110C), sensor 2614 (FIGURE 110D), housing 2616 (FIGURE 110E), and base 2618 (FIGURE 110F). It is understood that inserter 2600 may include additional or fewer components than described herein. The assembly of the different components of inserter 2600 is depicted in FIGURES 111A-111C. As shown in FIGURE 111A, actuator button is adapted to be slidably inserted through an opening in shuttle 2604 where it locks into position. Further, as shown in FIGURE 111B, retraction spring 2608 is adapted to be inserted into a second opening on the opposite side of shuttle 2604. Additionally, in this view, sensor 2614 has been attached to inserter sharp 2610. Any number of the aforementioned sensor connection methods can be utilized in conjunction with inserter 2600. For example, inserter sharp 2610 may be provided with rails and dimples, as previously described, in order to retain sensor 2614, the inserter sharp 2610 having a diameter of about 20 to about 26 gauge, *e.g.*, 21 gauge to about 25 gauge, where in certain embodiment's the sharp is 21 gauge or 23 gauge or 25 gauge. Such sharp may be used with a sensor having a width or diameter—at least the portion that is carried by the sharp—of about .20 mm to about .80 mm, *e.g.*, about .25 mm to about .60 mm, where in some embodiments the width or diameter of at least a portion of a sensor is .27 mm or .33 mm or .58 mm.

[00278] FIGURE 111C depicts a cross-sectional view of the assemblage of FIGURE 111B after inserter 2600 has been fully assembled (joining housing 2616 to base 2618). As depicted, retraction spring 2608 is surrounded by guides 2622 on its sides and by shuttle 2604 and base 2618 when inserter 2600 is assembled. Additionally, shuttle 2604 is adapted to slidably move on rails (not shown) within housing 2616, thereby allowing it to move in a linear direction when actuator button 2602 is depressed.

[00279] FIGURES 112A-112C illustrate the steps utilized to deploy sensor 2614 using inserter 2600. FIGURE 112A depicts inserter 2600 in a first configuration. The upward force exerted by retraction spring 2608 on shuttle 2604 (and consequently actuator button 2602) keeps inserter 2600 in its cocked position in the first configuration. As actuator button 2602 is pressed by a user against the bias of retraction spring 2608, it exerts a downward force on shuttle 2604 and retraction spring 2608. Introducer sharp 2610, on which sensor 2614 is mounted, is consequently driven downward and into the skin of the subject (*e.g.*, to a second configuration). Skin piercing edge 2612 pierces the skin of the subject and allows sensor 2614 to be properly inserted, as shown in FIGURE 112B.

[00280] As the force is removed from actuator button 2602, retraction spring 2608 exerts an upward force on shuttle 2604, thereby causing introducer sharp 2610 to return proximally to its original position inside of housing 2616 (*e.g.*, to the first configuration). Sensor 2614 remains implanted in the patient's skin, as shown in FIGURE 112C.

[00281] Embodiments of driver apparatuses for actuation of inserters 100, 200, 300, 400, and 500 discussed herein are provided. The driver apparatuses are modular subassemblies for coupling with any of the inserters. The driver apparatuses may be used with one or more of the

inserters described herein, or may be used with other inserters. Of course, the inserters described herein need not include a driver apparatuses. A driver apparatus and an inserter may be removable from each other or may be provided to be fixed together and therefore constructed not to be separated from each other.

[00282] The driver apparatuses provide a consistently repeatable / reproducible actuation force to assist in the installation of the medical device with an inserter such as the inserters described herein. In some embodiments, a driver apparatus includes a spring-biased element to provide force for the advancement of the sharp and/or sensor housing. In some embodiments, the driver apparatuses are reusable apparatuses, capable of being used multiple times, whereas inserters 100, 200, 300, 400, and 500 may be disposable devices, *e.g.*, capable of being used only once. In other embodiments, both the driver apparatus and the inserter are reusable, both the driver apparatus and the inserter are disposable, and/or the driver apparatus is disposable, and the inserter is reusable.

[00283] An exemplary driver apparatus is illustrated in FIGURES 113-119 and designated driver apparatus 3600.

[00284] Driver apparatus 3600 includes a housing 3602 for positioning with respect to an inserter. A loading element 3604 —longitudinally movable with respect to housing 3602—is provided. In some embodiments, driver apparatus 3600 is provided with an actuator , *e.g.*, rotating cam 3606 which provides automatic actuation of an inserter. In use, arming button 3620 is pressed (in direction of arrow E) to connect rack 3610 with pinion 3612 (FIGURE 113). As illustrated in FIGURE 113, once arming button 3620 is pressed, loading element 3604 is depressed downwardly (direction of arrow D) to rotate cam 3606 in a first direction F against the

bias of torsion spring 3614. Firing button 3618 maintains the spring in the loaded position until pressed.

[00285] As illustrated in FIGURE 115, the driver apparatus 3600 is positioned with respect to an inserter 500. Although inserter 500 is illustrated in FIGURES 115-119, it is understood that any one of inserters 100, 200, 300, 400, or 500 may be used with driver apparatus 3600. Since driver apparatus 3600 and the appropriate inserter may be modular, the dimensions of the housing 3602 and the location and shape of cam 3606 are selected to interact with the dimensions of the inserter. For example, the housing 3602 may be designed for snap-fit or friction-fit cooperation with the sheath 542 of inserter 500.

[00286] As illustrated in FIGURE 116, cap 504 of inserter 500 is removed, thereby allowing placement of adhesive 518 (not shown) on the skin of the subject. To insert sharp 524 (not shown), release button 3618 may be depressed (arrow H).

[00287] FIGURES 117-119 illustrate the sequence of motions of the driver apparatus 3600 to drive sharp 524 into the skin of the patient. As illustrated in FIGURE 117, upon depressing release button 3618, torsion spring 3614 is released thereby driving rotation of cam 3606 in the direction J with the bias of the torsion spring. Cam 3606 includes a surface including a protrusion 3607. As illustrated in FIGURE 118, further rotation of cam 3606 causes protrusion 3607 to engage actuator button 514 of inserter 500. Consequently, bellows 502 and spring 546 are compressed, and needle hub 536 and carriage 530 are advanced distally. (Not shown in FIGURES 117-119. See, e.g., FIGURE 70.) Sharp 524 is driven into the skin of the subject and sensor housing 122 is adhered to the adhesive 518 (not shown). Further unwinding of the torsion spring causes the cam 3606 to further rotate, which results in protrusion 3607 being spaced from

the actuator button 514, as illustrated in FIGURE 119. As a result, the spring bias of retraction spring 546 (not shown) returns bellows 502 to its expanded configuration, and retracts the sharp 524 from the skin of the subject.

[00288] Another exemplary driver apparatus for actuation of inserters, *e.g.*, the inserters 100, 200, 300, 400, and 500, discussed herein, is illustrated in FIGURES 120-126 and designated driver apparatus 3700. In some embodiments, driver apparatus 3700 is a reusable apparatus, whereas inserters 100, 200, 300, 400, and 500 may be disposable devices. Driver apparatus 3700 is substantially identical to driver apparatus 3600, with the substantial differences noted herein and indicated in the accompanying figures.

[00289] As illustrated in FIGURES 120 and 121, driver apparatus 3700 includes a housing 3702 for positioning with respect to an inserter. A loading element 3704— longitudinally movable with respect to an upper housing 3705—is provided. In some embodiments, actuator 3706 is a reciprocal element that provides automatic actuation of an inserter. In use, loading element 3704 is advanced laterally (direction of arrow K) along a track 3710 against the normal bias of a drive spring 3714. Upon loading of the drive spring 3714, a locking mechanism 3718 maintains the loading of spring 3714.

[00290] As illustrated in FIGURE 122, the driver apparatus 3700 is positioned with respect to an inserter 500. Although inserter 500 is illustrated in FIGURES 122-126, it is understood that any of inserters 100, 200, 300, 400, 500, 900, etc., may be used with driver apparatus 3700. As illustrated in FIGURE 123, cap 504 of inserter 500 is removed, thereby allowing placement of adhesive 518 (not shown) on the skin of the subject. To insert the sharp 524 (not shown), release button 3718 may be depressed (arrow L).

[00291] FIGURES 124-126 illustrate the sequence of motions of the driver apparatus 3700 to drive the sharp 524 into the skin of the patient. As illustrated in FIGURES 124-126, upon depressing release button 3718, drive spring 3714 is released, thereby driving sliding member 3707 in the direction M with the bias of the spring 3714. Sliding member 3707 is restrained to lateral motion due its positioning in track 3710. Similarly, actuator 3706 is restrained to longitudinal motion due to its positioning in track 3709. Sliding member 3707 is coupled to actuator 3706 by a crank member 3720, which is pivotally connected to one end to sliding member 3707 and at the other end to actuator 3706. As illustrated in FIGURE 125, further lateral movement of sliding member 3707 causes the actuator 3706 to advance distally and to engage the actuator button 514 of inserter 500. Consequently, bellows 502 is compressed and needle hub 536 and carriage 530 are advanced distally, thereby driving sharp 524 into the skin of the subject and adhering sensor housing 122 to the adhesive 518 (not shown. See, *e.g.*, FIG 70, 518, 546). Further lateral movement of sliding member 3707 causes the actuator 3706 to advance proximally, as illustrated in FIGURE 126. As a result, the spring bias of retraction spring 546 (Not shown. See, *e.g.,* FIG. 70) returns bellows 502 to its expanded configuration, and retracts the sharp 524 from the skin of the subject.

[00292] A driver apparatus for actuation of inserters , *e.g.*, inserters 100, 200, 300, 400, and 500, discussed herein, is illustrated in FIGURES 127-128J and designated driver apparatus 3800. In some embodiments, driver apparatus 3800 is a reusable apparatus, whereas inserters 100, 200, 300, 400, and 500 may be disposable devices. Driver apparatus 3800 is substantially identical to actuators 3600 and 3700, with the substantial differences noted herein and indicated in the accompanying figures.

[00293] As illustrated in FIGURES 127 and 128, driver apparatus 3800 includes a housing 3802 for positioning with respect to an inserter. A loading element 3804 is provided which is longitudinally movable with respect to housing 3802. Depression of the loading element causes a rotor 3808 to rotate against the bias of a torsion spring (not shown). A locking element (not shown) maintains the loading of the torsion spring.

[00294] As illustrated in FIGURES 127 and 128, the driver apparatus 3800 is positioned with respect to inserter 100. Although inserter 100 is illustrated in FIGURE 127, it is understood that any of inserters 100, 200, 300, 400, 500, 900, etc., may be used with driver apparatus 3800. As illustrated in FIGURES 11-12, cap 104 of inserter 100 is removed, thereby allowing placement of adhesive 118 (not shown) on the skin of the subject. To insert the sharp 124 (not shown), loading element 3804 may be depressed.

[00295] Upon depressing loading element 3804, the torsion spring is released, thereby driving the actuator 3806 in the longitudinal direction with the bias of the spring. Actuator 3806 is advanced distally and engages the actuator button 114 of inserter 100. Consequently, needle hub 136 and carriage 130 are advanced distally, thereby driving sharp 124 into the skin of the subject and adhering sensor housing 122 to adhesive 118 (not shown). The actuator 3806 is subsequently advanced proximally. As a result, the spring bias of retraction spring 146 (not shown) retracts sharp 124 from the skin of the subject.

[00296] An enhanced view of the actuation of driver apparatus 3800 is depicted in FIGURES 128A-128J. As depicted in FIGURE 128A, driver apparatus 3800 includes trigger 3810, cam 3808, arming button 3812, torsion spring 3814, shaft 3816, pawl 3818, actuator 3806, and return spring 3820. To arm driver apparatus 3800, loading element 3804 is pressed causing arming

button 3812 to be pushed down, winding shaft 3816 and thus torsion spring 3814 (FIGURE 128B). Pawl 3818 locks shaft 3816 into place (FIGURE 128C). After a user depresses loading element 3804, arming button 3812 returns to its original position while shaft 3816 is held in place by pawl 3818 (FIGURE 128D).

[00297] In order to actuate driver apparatus 3800, a user again pushes loading element 3804. This causes trigger 3810 to move in a downward motion causing cam 3808 to be released. In some embodiments, loading element 3804 is used to alternately depress arming button 3812 and trigger 3810. Cam 3808 is then driven forward by torsion spring 3814 (FIGURE 128E). In some embodiments, a first loading element is used to depress arming button 3812, and a second loading element is used to depress trigger 3810 (not shown).

[00298] As cam 3808 rotates, it pushes down on actuator 3806, which in turn pushes down on actuator button 114 of inserter 100 (FIGURES 128F-128G). At the end of the stroke, there is a slight dwell. This allows the sensor body to be held and pressed on to the adhesive skin patch (FIGURE 128H). After a full rotation, cam 3808 is stopped by trigger 3810 as shown in FIGURE 128I. Return spring 3820 pushes actuator 3806 back up, releasing pressure on inserter 100. When trigger 3810 is released by the user, cam 3808 continues to rotate until it is in the home position, thereby allowing driver apparatus 3800 to be used again (FIGURE 128J).

[00299] It is understood that the subject matter described herein is not limited to particular embodiments described, as such may, of course, vary. It is also understood that the terminology used herein is for the purpose of describing particular embodiments only, and is not intended to be limiting, since the scope of the present subject matter is limited only by the appended claims.

[00300] Additional detailed description of embodiments of the disclosed subject matter is provided in but not limited to: U.S. Patent No. 7,381,184; U.S. Patent No. 7,299,082; U.S. Patent No. 7,167,818; U.S. Patent No. 7,041,468; U.S. Patent No. 6,942,518; U.S. Patent No. 6,893,545; U.S. Patent No. 6,881,551; U.S. Patent No. 6,773,671; U.S. Patent No. 6,764,581; U.S. Patent No. 6,749,740; U.S. Patent No. 6,746,582; U.S. Patent No. 6,736,957; U.S. Patent No. 6,730,200; U.S. Patent No. 6,676,816; U.S. Patent No. 6,618,934; U.S. Patent No. 6,616,819; U.S. Patent No. 6,600,997; U.S. Patent No. 6,592,745; U.S. Patent No. 6,591,125; U.S. Patent No. 6,560,471; U.S. Patent No. 6,540,891; U.S. Patent No. 6,514,718; U.S. Patent No. 6,514,460; U.S. Patent No. 6,503,381; U.S. Patent No. 6,461,496; U.S. Patent No. 6,377,894; U.S. Patent No. 6,338,790; U.S. Patent No. 6,299,757; U.S. Patent No. 6,284,478; U.S. Patent No. 6,270,455; U.S. Patent No. 6,175,752; U.S. Patent No. 6,161,095; U.S. Patent No. 6,144,837; U.S. Patent No. 6,143,164; U.S. Patent No. 6,134,461;U.S. Patent No. 6,121,009; U.S. Patent No. 6,120,676; U.S. Patent No. 6,071,391; U.S. Patent No. 5,918,603; U.S. Patent No. 5,899,855; U.S. Patent No. 5,822,715; U.S. Patent No. 5,820,551; U.S. Patent No. 5,628,890; U.S. Patent No. 5,601,435; U.S. Patent No. 5,593,852; U.S. Patent No. 5,509,410; U.S. Patent No. 5,320,715; U.S. Patent No. 5,264,014; U.S. Patent No. 5,262,305; U.S. Patent No. 5,262,035; U.S. Patent No. 4,711,245; U.S. Patent No. 4,545,382; U.S. Patent Publication No. 2004/0186365, published September 23, 2004; U.S. Patent Application No. 61/238,646, filed August 31, 2009, the disclosures of each of which is incorporated by reference herein for all purposes.

CLAIMS

WHAT IS CLAIMED IS:

1. An apparatus for inserting a medical device into the skin of a subject, which comprises:

a sheath defining a distal surface for placement on the skin of the subject;

a device support movable between a proximal and distal position, and adapted to support the medical device;

a sharp support movable between a proximal and a distal position, and adapted to support a sharp extending through a portion of said device support;

a handle movable between a proximal position and a distal position relative to the sheath and adapted to urge the device support and the sharp support from a proximal to a distal position to insert the sharp into the skin of the subject; and

a driver for biasing the handle towards the proximal position.

2. The apparatus of claim 1, wherein the driver comprises a compression spring.

3. The apparatus of claim 1, wherein the handle is at least partially disposed within the sheath.

4. The apparatus of claim 1, wherein the handle is at least partially disposed surrounding the sheath.

5. The apparatus of claim 1, wherein the sharp support is coupled to the handle.

6. The apparatus of claim 5, wherein the sharp support is fixed to the handle.

7. The apparatus of claim 5, wherein the device support is coupled to the sharp support until the device support reaches a distal position.

8. The apparatus of claim 5, wherein the device support is uncoupled from the sharp support when the device support reaches the distal position.

9. The apparatus of claim 1, further comprising a retention member for retaining the device support in the proximal position.

10. The apparatus of claim 9, wherein the retention member comprises a stop portion.

11. The apparatus of claim 1, wherein the medical device is an analyte sensor.

12. The apparatus of claim 1, wherein the medical device is a glucose sensor.

13. The apparatus of claim 1, wherein the medical device is an infusion set.

14. An apparatus for inserting a medical device through the skin of a subject, which comprises:

a first subassembly comprising

a sheath defining a distal surface for placement on the skin of the subject;

a handle movable between a proximal position and distal position;

a device support for supporting the medical device and defining an aperture therethrough, the device support coupled to the handle;

a sharp support for supporting a sharp extending through said aperture and coupled to the device support; and

a first driver for biasing the sharp support towards the proximal position; and

a second subassembly comprising

a housing configured for removable attachment to the first subassembly; and

a second driver for advancing the sharp support towards the distal position.

15. The apparatus of claim 14, wherein the second driver comprises a rotatable cam.

16. The apparatus of claim 14, wherein the second driver comprises a torsion spring.

17. The apparatus of claim 14, wherein the second driver comprises an axial driver and a crank assembly.

18. The apparatus of claim 17, wherein the second driver comprises a compression spring.

19. The apparatus of claim 14, wherein the first driver comprises a compression spring.

20. The apparatus of claim 14, wherein the first driver comprises a torsion spring.

21. The apparatus of claim 14, wherein the handle is at least partially disposed surrounding the sheath.

22. The apparatus of claim 14, further comprising a bellows portion disposed between the sheath and the handle.

23. The apparatus of claim 14, further comprising a retention member for retaining the device support in the distal position.

24. The apparatus of claim 14, wherein the device support is coupled to the handle until the device support reaches a distal position.

25. The apparatus of claim 14 wherein the device support is uncoupled from the sharp support when the device support reaches the distal position.

26. The apparatus of claim 14, further comprising a second driver for biasing the device support towards the distal position.

27. The apparatus of claim 14, wherein the medical device is an analyte sensor.

28. The apparatus of claim 14, wherein the medical device is a glucose sensor.

29. The apparatus of claim 14, wherein the medical device is an infusion set.

30. The apparatus of claim 14, wherein the housing is configured for friction-fit attachment to the first subassembly.

31. The apparatus of claim 14, wherein the first subassembly is configured for a single use.

32. The apparatus of claim 14, wherein the second subassembly is configured for multiple uses.

ABSTRACT

An apparatus for insertion of a medical device in the skin of a subject is provided, as well as methods of inserting and using medical devices.

Electronic Patent Application Fee Transmittal

Application Number:	
Filing Date:	
Title of Invention:	MEDICAL DEVICE INSERTERS AND PROCESSES OF INSERTING AND USING MEDICAL DEVICES
First Named Inventor/Applicant Name:	Samuel Mason Curry
Filer:	David W. Schalk
Attorney Docket Number:	031312-06299

Filed as Large Entity

Provisional Filing Fees

Description	Fee Code	Quantity	Amount	Sub-Total in USD($)
Basic Filing:				
Provisional application filing	1005	1	220	220
Pages:				
Prov. Appl Size fee per 50 sheets >100	1085	1	270	270
Claims:				
Miscellaneous-Filing:				
Petition:				
Patent-Appeals-and-Interference:				
Post-Allowance-and-Post-Issuance:				

Description	Fee Code	Quantity	Amount	Sub-Total in USD($)
Extension-of-Time:				
Miscellaneous:				
			Total in USD ($)	**490**

Electronic Acknowledgement Receipt

EFS ID:	7280639
Application Number:	61317243
International Application Number:	
Confirmation Number:	1515
Title of Invention:	MEDICAL DEVICE INSERTERS AND PROCESSES OF INSERTING AND USING MEDICAL DEVICES
First Named Inventor/Applicant Name:	Samuel Mason Curry
Customer Number:	90259
Filer:	David W. Schalk
Filer Authorized By:	
Attorney Docket Number:	031312-06299
Receipt Date:	24-MAR-2010
Filing Date:	
Time Stamp:	21:33:03
Application Type:	Provisional

Payment information:

Submitted with Payment	yes
Payment Type	Credit Card
Payment was successfully received in RAM	$490
RAM confirmation Number	6226
Deposit Account	
Authorized User	

File Listing:

Document Number	Document Description	File Name	File Size(Bytes)/ Message Digest	Multi Part /.zip	Pages (if appl.)

1	Provisional Cover Sheet (SB16)	cover.pdf	1060639 f7ea1ac879863bb91c2e6791b0156dd088eafc60	no	4
Warnings:					
Information:					
2	Drawings-only black and white line drawings	Drawings.pdf	11089769 fd3cf39481b269a4985e0092dae8c899cd7f8a44	no	98
Warnings:					
Information:					
3	Specification	spec.pdf	283276 c7a5be46f1bd9c958268856ba557b9091f2e4789	no	94
Warnings:					
Information:					
4	Fee Worksheet (PTO-875)	fee-info.pdf	31673 291858ff575d51ab4baa03145864a04ea57a7016	no	2
Warnings:					
Information:					
			Total Files Size (in bytes):	12465357	

This Acknowledgement Receipt evidences receipt on the noted date by the USPTO of the indicated documents, characterized by the applicant, and including page counts, where applicable. It serves as evidence of receipt similar to a Post Card, as described in MPEP 503.

<u>New Applications Under 35 U.S.C. 111</u>
If a new application is being filed and the application includes the necessary components for a filing date (see 37 CFR 1.53(b)-(d) and MPEP 506), a Filing Receipt (37 CFR 1.54) will be issued in due course and the date shown on this Acknowledgement Receipt will establish the filing date of the application.

<u>National Stage of an International Application under 35 U.S.C. 371</u>
If a timely submission to enter the national stage of an international application is compliant with the conditions of 35 U.S.C. 371 and other applicable requirements a Form PCT/DO/EO/903 indicating acceptance of the application as a national stage submission under 35 U.S.C. 371 will be issued in addition to the Filing Receipt, in due course.

<u>New International Application Filed with the USPTO as a Receiving Office</u>
If a new international application is being filed and the international application includes the necessary components for an international filing date (see PCT Article 11 and MPEP 1810), a Notification of the International Application Number and of the International Filing Date (Form PCT/RO/105) will be issued in due course, subject to prescriptions concerning national security, and the date shown on this Acknowledgement Receipt will establish the international filing date of the application.

UNITED STATES PATENT AND TRADEMARK OFFICE

UNITED STATES DEPARTMENT OF COMMERCE
United States Patent and Trademark Office
Address: COMMISSIONER FOR PATENTS
P.O. Box 1450
Alexandria, Virginia 22313-1450
www.uspto.gov

APPLICATION NUMBER	FILING or 371(c) DATE	GRP ART UNIT	FIL FEE REC'D	ATTY.DOCKET.NO	TOT CLAIMS	IND CLAIMS
61/317,243	03/24/2010		490	031312-06299		

CONFIRMATION NO. 1515

FILING RECEIPT

90259
Hughes Hubbard and Reed LLP
One Battery Park Plaza
New York, NY 10004

OC000000040981180

Date Mailed: 04/09/2010

Receipt is acknowledged of this provisional patent application. It will not be examined for patentability and will become abandoned not later than twelve months after its filing date. Any correspondence concerning the application must include the following identification information: the U.S. APPLICATION NUMBER, FILING DATE, NAME OF APPLICANT, and TITLE OF INVENTION. Fees transmitted by check or draft are subject to collection. Please verify the accuracy of the data presented on this receipt. **If an error is noted on this Filing Receipt, please submit a written request for a Filing Receipt Correction. Please provide a copy of this Filing Receipt with the changes noted thereon. If you received a "Notice to File Missing Parts" for this application, please submit any corrections to this Filing Receipt with your reply to the Notice. When the USPTO processes the reply to the Notice, the USPTO will generate another Filing Receipt incorporating the requested corrections**

Applicant(s)

Samuel Mason Curry, Oakland, CA;
Vincent M. DiPalma, Hayward, CA;
Manuel Luis Donnay, San Francisco, CA;
Udo Hoss, Alameda, CA;
Daniel H. Lee, Burlingame, CA;
Michael Love, Pleasanton, CA;
Tuan Nguyen, Dublin, CA;
Louis G. Pace, San Carlos, CA;
Peter G. Robinson, Alamo, CA;
Christopher Allen Thomas, San Leandro, CA;
Phillip Yee, San Francisco, CA;
Michael Chung-Ta Chiang, Emeryville, CA;

Power of Attorney: None

If Required, Foreign Filing License Granted: 04/05/2010

The country code and number of your priority application, to be used for filing abroad under the Paris Convention, is **US 61/317,243**

Projected Publication Date: None, application is not eligible for pre-grant publication

Non-Publication Request: No

Early Publication Request: No

Title

MEDICAL DEVICE INSERTERS AND PROCESSES OF INSERTING AND USING MEDICAL DEVICES

PROTECTING YOUR INVENTION OUTSIDE THE UNITED STATES

Since the rights granted by a U.S. patent extend only throughout the territory of the United States and have no effect in a foreign country, an inventor who wishes patent protection in another country must apply for a patent in a specific country or in regional patent offices. Applicants may wish to consider the filing of an international application under the Patent Cooperation Treaty (PCT). An international (PCT) application generally has the same effect as a regular national patent application in each PCT-member country. The PCT process **simplifies** the filing of patent applications on the same invention in member countries, but **does not result** in a grant of "an international patent" and does not eliminate the need of applicants to file additional documents and fees in countries where patent protection is desired.

Almost every country has its own patent law, and a person desiring a patent in a particular country must make an application for patent in that country in accordance with its particular laws. Since the laws of many countries differ in various respects from the patent law of the United States, applicants are advised to seek guidance from specific foreign countries to ensure that patent rights are not lost prematurely.

Applicants also are advised that in the case of inventions made in the United States, the Director of the USPTO must issue a license before applicants can apply for a patent in a foreign country. The filing of a U.S. patent application serves as a request for a foreign filing license. The application's filing receipt contains further information and guidance as to the status of applicant's license for foreign filing.

Applicants may wish to consult the USPTO booklet, "General Information Concerning Patents" (specifically, the section entitled "Treaties and Foreign Patents") for more information on timeframes and deadlines for filing foreign patent applications. The guide is available either by contacting the USPTO Contact Center at 800-786-9199, or it can be viewed on the USPTO website at http://www.uspto.gov/web/offices/pac/doc/general/index.html.

For information on preventing theft of your intellectual property (patents, trademarks and copyrights), you may wish to consult the U.S. Government website, http://www.stopfakes.gov. Part of a Department of Commerce initiative, this website includes self-help "toolkits" giving innovators guidance on how to protect intellectual property in specific countries such as China, Korea and Mexico. For questions regarding patent enforcement issues, applicants may call the U.S. Government hotline at 1-866-999-HALT (1-866-999-4158).

LICENSE FOR FOREIGN FILING UNDER

Title 35, United States Code, Section 184

Title 37, Code of Federal Regulations, 5.11 & 5.15

GRANTED

The applicant has been granted a license under 35 U.S.C. 184, if the phrase "IF REQUIRED, FOREIGN FILING LICENSE GRANTED" followed by a date appears on this form. Such licenses are issued in all applications where the conditions for issuance of a license have been met, regardless of whether or not a license may be required as set forth in 37 CFR 5.15. The scope and limitations of this license are set forth in 37 CFR 5.15(a) unless an earlier license has been issued under 37 CFR 5.15(b). The license is subject to revocation upon written notification. The

date indicated is the effective date of the license, unless an earlier license of similar scope has been granted under 37 CFR 5.13 or 5.14.

This license is to be retained by the licensee and may be used at any time on or after the effective date thereof unless it is revoked. This license is automatically transferred to any related applications(s) filed under 37 CFR 1.53(d). This license is not retroactive.

The grant of a license does not in any way lessen the responsibility of a licensee for the security of the subject matter as imposed by any Government contract or the provisions of existing laws relating to espionage and the national security or the export of technical data. Licensees should apprise themselves of current regulations especially with respect to certain countries, of other agencies, particularly the Office of Defense Trade Controls, Department of State (with respect to Arms, Munitions and Implements of War (22 CFR 121-128)); the Bureau of Industry and Security, Department of Commerce (15 CFR parts 730-774); the Office of Foreign AssetsControl, Department of Treasury (31 CFR Parts 500+) and the Department of Energy.

NOT GRANTED

No license under 35 U.S.C. 184 has been granted at this time, if the phrase "IF REQUIRED, FOREIGN FILING LICENSE GRANTED" DOES NOT appear on this form. Applicant may still petition for a license under 37 CFR 5.12, if a license is desired before the expiration of 6 months from the filing date of the application. If 6 months has lapsed from the filing date of this application and the licensee has not received any indication of a secrecy order under 35 U.S.C. 181, the licensee may foreign file the application pursuant to 37 CFR 5.15(b).