US 20080097246A1

(19) United States

(12) Patent Application Publication

(10) Pub. No.: US 2008/0097246 A1

(43) Pub. Date: Apr. 24, 2008

Stafford

(54) METHOD AND SYSTEM FOR PROVIDING AN INTEGRATED ANALYTE SENSOR INSERTION DEVICE AND DATA PROCESSING UNIT

(75) Inventor: **Gary Ashley Stafford**, Hayward, CA (US)

Correspondence Address:
JACKSON & CO., LLP
6114 LA SALLE AVENUE, #507
OAKLAND, CA 94611-2802

(73) Assignee: **Abbott Diabetes Care, Inc**, Alameda, CA (US)

(21) Appl. No.: **11/530,472**

(22) Filed: **Sep. 10, 2006**

Publication Classification

(51) **Int. Cl.**
A61B 10/00 (2006.01)

(52) **U.S. Cl.** **600/584**

(57) **ABSTRACT**

Method and apparatus for providing an integrated analyte sensor and data processing unit assembly is provided.

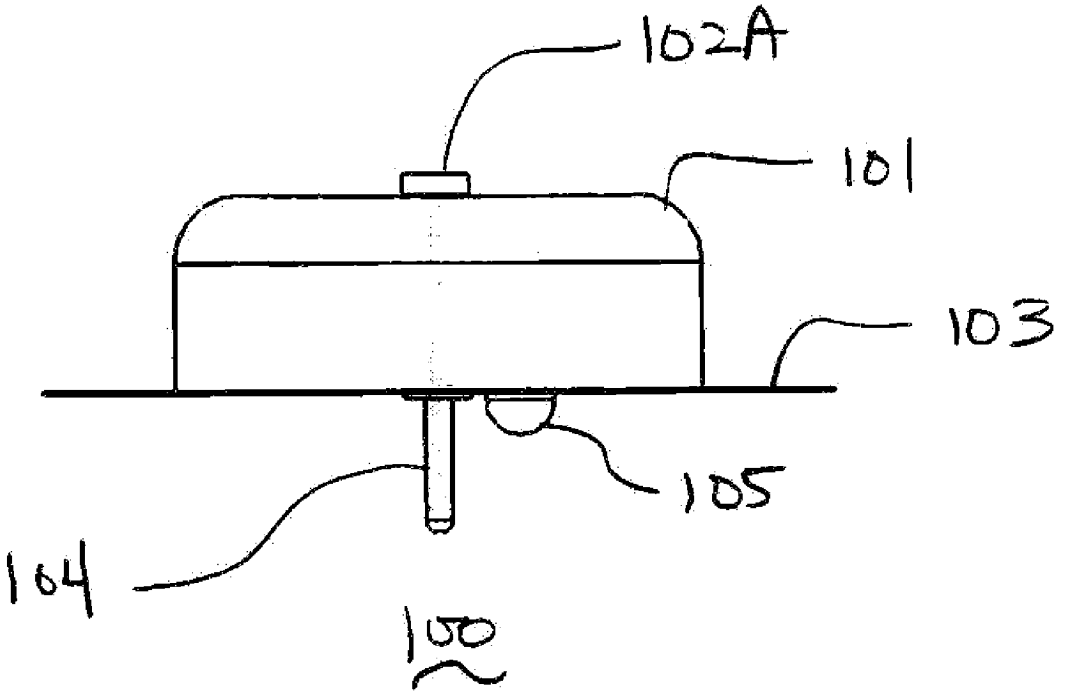

DEXCOM
EXHIBIT 1009

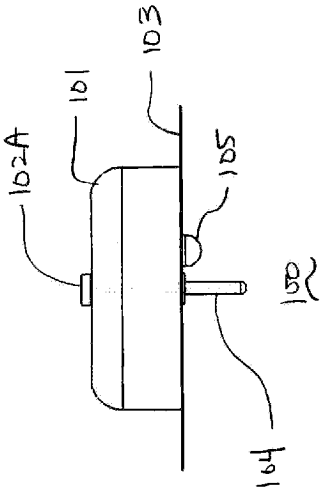

FIGURE 1

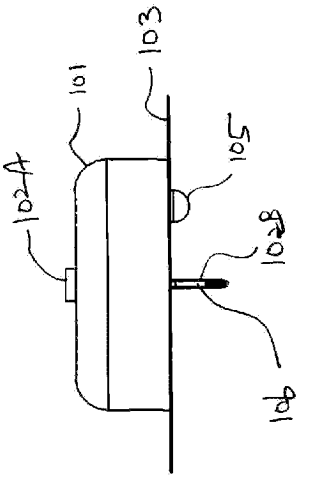

FIGURE 2

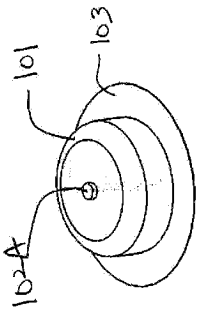

FIGURE 3A

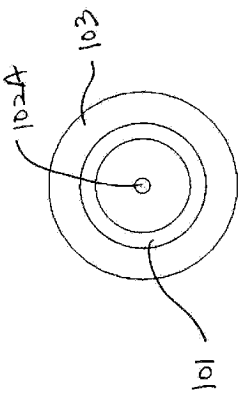

FIGURE 3B

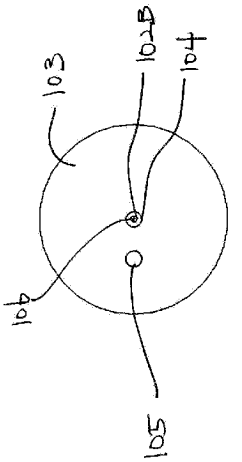

FIGURE 3C

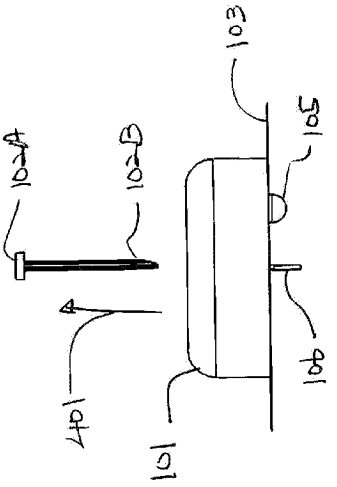

FIGURE 4A

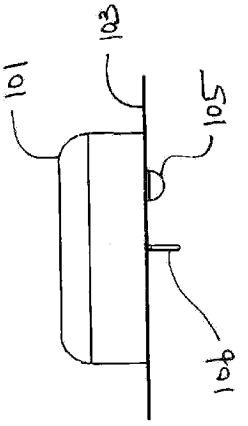

FIGURE 4B

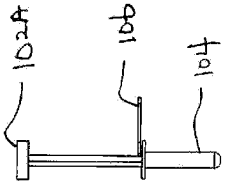

FIGURE 5A

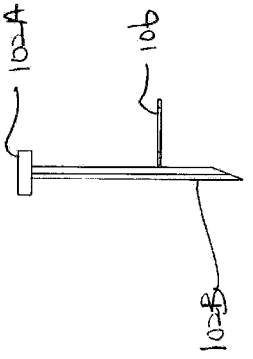

FIGURE 5B

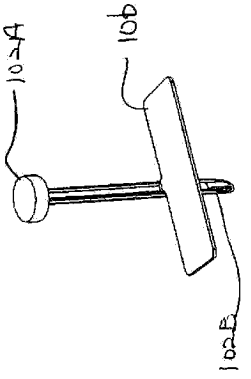

FIGURE 5C

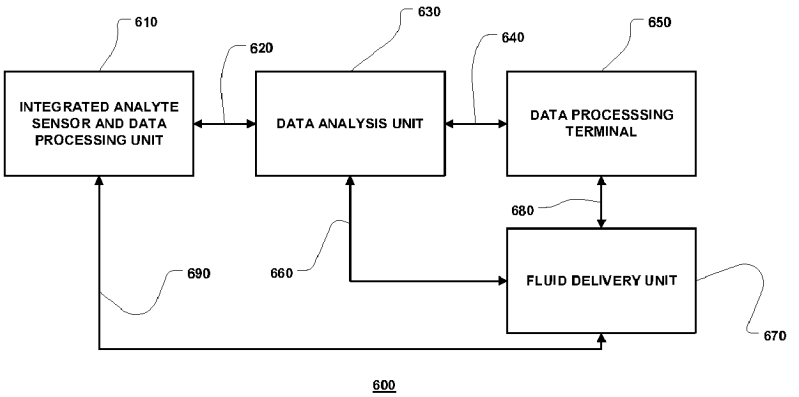

FIGURE 6

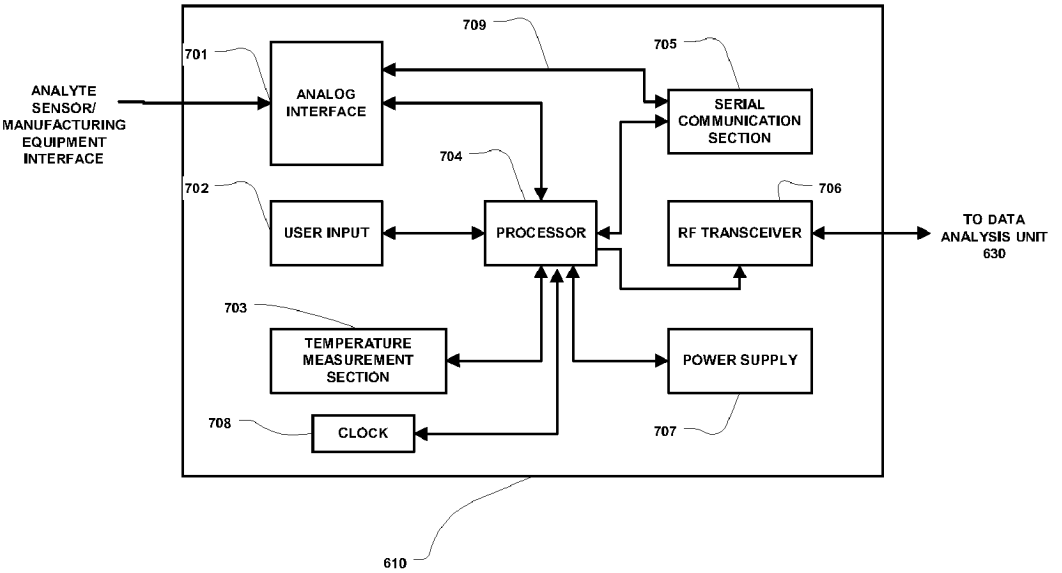

FIGURE 7

METHOD AND SYSTEM FOR PROVIDING AN INTEGRATED ANALYTE SENSOR INSERTION DEVICE AND DATA PROCESSING UNIT

BACKGROUND

[0001] Analyte monitoring systems generally include a sensor such as a subcutaneous analyte sensor, at least a portion of which is inserted under the skin for fluid contact with interstitial fluid, for detecting analyte levels such as glucose levels, a transmitter (such as an RF transmitter) in communication with the sensor and configured to receive the sensor signals and to transmit them to a corresponding receiver unit by for example, using RF data transmission protocol. The receiver may be operatively coupled to a glucose monitor that performs glucose related calculations and data analysis.

[0002] The transmitter is in signal communication with the sensor. Generally, the sensor is configured to detect and measure the glucose levels of the patient over a predetermined period of time, and the transmitter is configured to transmit data corresponding to or associated with the measured glucose levels over the predetermined period of time for further analysis. To initially deploy the sensor so that the sensor electrodes are in fluid contact with the patient's analyte fluids, a separate deployment mechanism such as a sensor inserter or introducer is used. More specifically, the introducer includes a sharp needle shaped inserter that is configured to pierce through the skin of the patient and substantially concurrently guide the sensor through the patient's skin so as to place at least a portion of the sensor in fluid contact with the target biological fluid of the patient.

[0003] The inserter is typically used only during the sensor insertion process, and once the sensor is properly and accurately positioned, the inserter and the introducer are discarded. This requires a level of care as the inserter is sharp and may damage other parts of the patient's skin if not properly handled. Further, since the tip of the inserter has come into fluid contact with the patient's biological fluids, it is important to take particular precautions in the handling of the inserter.

[0004] Further, to minimize data errors in the continuous or semi-continuous monitoring system, it is important to properly insert the sensor through the patient's skin and securely retain the sensor during the time that the sensor is configured to detect analyte levels. Additionally, for the period of continuous or semi-continuous monitoring which can include, for example, 3 days, 5 days or 7 days, it is important to have the transmitter in proper signal contact with the analyte sensor so as to minimize the potential errors in the monitored data.

[0005] In view of the foregoing, it would be desirable to have method and apparatus for providing simple, easy to handle and accurate sensor introduction and retention mechanism for use in an analyte monitoring system. More specifically, it would be desirable to have method and apparatus that minimizes the number of components which the patient has to handle, and which also reduces the number of required steps to properly and accurately position the analyte sensor in fluid contact with the patient's analytes.

SUMMARY OF THE INVENTION

[0006] An integrated assembly in accordance with one embodiment of the present invention includes a housing, a data processing unit substantially disposed within the housing, an introducer removably coupled to the housing, at least a portion of the introducer disposed within the housing, and an analyte sensor coupled to the housing, a first portion of the analyte sensor configured for subcutaneous placement and in fluid contact with an interstitial fluid of a subject, and a second portion of the analyte sensor disposed within the housing and in electrical communication with the data processing unit.

[0007] In the manner described, within the scope of the present invention, the integrated analyte sensor and data processing unit assembly in accordance with the various embodiments is configured to integrate an analyte sensor, a sensor introducer mechanism, and a data processing device into a single assembly which is may be disposable, and which allows for simple and accurate sensor deployment to the desired subcutaneous position, and that may be easily operated using one hand by the user or the patient.

[0008] These and other features and advantages of the present invention will be understood upon consideration of the following detailed description of the invention and the accompanying drawings.

BRIEF DESCRIPTION OF THE DRAWINGS

[0009] FIG. **1** illustrates a side view of the overall assembly of an integrated analyte sensor delivery and data processing unit in accordance with one embodiment of the present invention;

[0010] FIG. **2** illustrates a side view of the integrated analyte sensor delivery and data processing unit of FIG. **1** without a protective guard in accordance with one embodiment of the present invention;

[0011] FIGS. **3**A-**3**C illustrate a perspective view, a top planar view and a bottom planar view, respectively of the integrated analyte sensor delivery and data processing unit of FIG. **1** in accordance with one embodiment of the present invention;

[0012] FIG. **4**A illustrates the integrated analyte sensor delivery and data processing unit of FIG. **1** with the introducer removed in accordance with one embodiment;

[0013] FIG. **4**B illustrates the integrated analyte sensor delivery and data processing unit without the introducer in accordance with one embodiment of the present invention;

[0014] FIG. **5**A illustrates the introducer and the analyte sensor assembly with the protective guard in accordance with one embodiment of the present invention;

[0015] FIGS. **5**B-**5**C illustrate a side view and a perspective view, respectively, of the introducer and analyte sensor assembly in accordance with one embodiment of the present invention;

[0016] FIG. **6** illustrates a block diagram of an analyte monitoring system with integrated analyte sensor delivery and data processing unit in accordance with one embodiment of the present invention; and

[0017] FIG. **7** illustrates a block diagram of the data processing unit of the integrated analyte sensor delivery and data processing unit in accordance with one embodiment of the present invention.

DETAILED DESCRIPTION

[0018] In accordance with the various embodiments of the present invention, there is provided an integrated analyte sensor delivery and data processing unit for subcutaneous placement of an analyte sensor for fluid contact with an analyte of a subject for analyte monitoring, and data processing associated with the monitored analyte levels. More specifically, the integrated analyte sensor delivery and data processing unit in accordance with one embodiment of the present invention provides simple, easy to use analyte sensor placement for analyte monitoring and associated data processing without a direct line of sight visual aid, and also, which may be easily performed without the use of both hands.

[0019] FIG. **1** illustrates a side view of the overall assembly of an integrated analyte sensor delivery and data processing unit in accordance with one embodiment of the present invention. Referring to FIG. **1**, in one embodiment, an integrated analyte sensor delivery and data processing unit assembly **100** includes a data processing unit **101** provided on an upper surface of an adhesive patch **103** as shown. The adhesive patch **103** in one embodiment is provided with an adhesive material, such as, for example, polyester or acrylic based adhesives or any other suitable material which are biocompatible providing sufficient adhesive strength, on its bottom surface that is configured to securely attach the adhesive patch **103** and the data processing unit **101** on a surface of a subject such as the skin of a patient.

[0020] Referring to FIG. **1**, also provided is a temperature module **105** to be in physical contact with the surface of the subject to, among others, detect the temperature, as further discussed in further detail below in conjunction with temperature measurement section **703** of FIG. **7**. Referring again to FIG. **1**, the integrated sensor delivery and data processing unit assembly **100** in one embodiment also includes an introducer having an upper portion **102**A and a lower portion **102**B. The upper and lower portions **102**A, **102**B of the introducer in one embodiment is coupled to the housing of the data processing unit **101** such that the upper portion **102**A of the introducer protrudes from an upper surface of the data processing unit **101**, while the lower portion **102**B of the introducer is configured to protrude downwardly from the bottom surface of the data processing unit **101** as can be seen in FIG. **1**.

[0021] As shown in FIG. **1**, the upper portion **102**A of the introducer is configured to guide the user to insert the introducer through the surface of the subject such as the skin of the patient. Thus, the upper portion **102**A of the introducer in one embodiment is provided with a larger surface area (that is, for example, a larger diameter) to apply force thereon, while the lower portion **102**B of the introducer is configured with a sharp tip to facilitate puncturing or piercing through the surface of the subject such as the skin of the patient. For example, in one embodiment,

[0022] Additionally, in one aspect, there is provided a guard segment **104** in the integrated analyte sensor and data processing unit assembly **100** such that the guard segment **104** is configured to substantially cover the lower portion **102**B of the introducer. In one embodiment, the guard segment **104** is configured as a protective needle guard so as to maintain the lower portion **102**B of the introducer in a substantially sterile environment prior to subcutaneous placement through the surface of the subject such as the skin of the patient. Moreover, in one aspect, the guard segment **104** is configured to protect the sharp edge of the lower portion **102**B of the introducer from inadvertent contact with the subject, for example, prior to the subcutaneous deployment of the analyte sensor to avoid, for example, contamination of the lower portion **102**B of the introducer, or potential injury from the sharp edge of the power portion **102**B of the introducer.

[0023] More specifically, FIG. **2** illustrates a side view of the integrated analyte sensor delivery and data processing unit of FIG. **1** without a guard segment in accordance with one embodiment of the present invention. Referring to FIG. **2**, with the guard segment **104** removed, it can be seen that in one embodiment, analyte sensor **106** is provided in the integrated analyte sensor delivery and data processing unit **100** such that the at least a portion of the analyte sensor **106** is disposed within the lower portion **102**B of the introducer.

[0024] In one embodiment, the patient or the user of the integrated analyte sensor delivery and data processing unit assembly **100** removes the guard segment **104** to expose the lower portion **102**B of the introducer, and thereafter, places the entire analyte sensor delivery and data processing unit assembly **100** on the surface of the subject such as the skin layer of the patient with sufficient force applied on the upper surface of the data processing unit **101** such that the lower portion **102**B of the introducer is pierced through the skin layer of the patient. Thereafter, the introducer may be removed to detach or decouple from the data processing unit **101** by, for example, pulling at the upper portion **102**A of the introducer, thereby withdrawing the introducer from the patient and separating from the data processing unit **101**, while retaining the analyte sensor **106** (FIG. **2**) in position in fluid contact with the patient's analyte.

[0025] Referring again to FIGS. **1** and **2**, in one embodiment, the bottom layer of the adhesive patch **103** may be provided with a protective layer (not shown) which the patient or the user of the integrated analyte sensor delivery and data processing unit assembly **100** removes (for example, by peeling off to detach from the bottom surface of the adhesive patch **103** and thus exposing the adhesive material on the bottom surface of the adhesive patch **103**) prior to subcutaneously positioning the analyte sensor in the patient. For example, in one embodiment, the guard segment **104** may be first removed and the protective layer removed before use, or alternatively, the removal of the protective layer may be configured to remove or detach the guard segment **104** therewith. In an alternate embodiment, the protective layer and the guard segment **104** may be formed as a single integrated unit for ease of use.

[0026] FIGS. **3**A-**3**C illustrate a perspective view, a top planar view and a bottom planar view, respectively of the integrated analyte sensor delivery and data processing unit of FIG. **1** in accordance with one embodiment of the present invention. Referring now to FIG. **4**A, the removal of the introducer is shown. More specifically, FIG. **4**A illustrates the integrated analyte sensor delivery and data processing unit of FIG. **1** with the introducer removed, and FIG. **4**B illustrates the integrated analyte sensor delivery and data processing unit without the introducer in accordance with

one embodiment of the present invention. That is, in one embodiment, upon placement of the integrated analyte sensor delivery and data processing unit assembly **100** on the skin surface of the patient, for example, the patient retracts or pulls the introducer substantially at the upper portion **102**A in the direction substantially perpendicular and away from the data processing unit **101** as shown by the directional arrow **401**.

[0027] When the introducer is removed, in one embodiment, the entire introducer including the upper portion **102**A and the lower portion **102**B is withdrawn from the housing of the data processing unit **101** to completely separate from the data processing unit. Moreover, the portion of the analyte sensor **106** is retained in the subcutaneous position so as to maintain fluid contact with the patient's analyte. In one embodiment, the housing of the transmitter unit **101** is provided with a self-sealing aperture (not shown) through which the introducer may be removed, such that, when the introducer is withdrawn, there is no opening or aperture on the data processing unit **101** housing where moisture or contaminant may compromise the functions and operations of the data processing unit **101**. Optionally, while not shown, a protective layer may be provided over the integrated analyte sensor delivery and data processing unit **100** upon positioning on the skin of the patient to provide protection from water, moisture or any other potential contaminants potentially damaging the integrated analyte sensor delivery and data processing unit **100**.

[0028] FIG. **5**A illustrates the introducer and the analyte sensor assembly with the protective guard, and FIGS. **5**B-**5**C illustrate a side view and a perspective view, respectively, of the introducer and analyte sensor assembly in accordance with one embodiment of the present invention. As shown in the Figures, the integrated analyte sensor delivery and data processing unit **100** in one embodiment may be pre-assembled as a single integrated unit with the analyte sensor **106** in electrical contact with the data processing unit **101**, and further, where a portion of the analyte sensor **106** is disposed within the lower portion **102**B of the introducer such that, the user or patient may easily, and accurately position the analyte sensor **106** under the skin layer to establish fluid contact with the patient's analyte, and thereafter, to provide the detected analyte levels from the analyte sensor **106** to the data processing unit **101**.

[0029] FIG. **6** illustrates a block diagram of an analyte monitoring system with integrated analyte sensor delivery and data processing unit in accordance with one embodiment of the present invention. Referring to FIG. **6**, a data monitoring and management system **600** such as, for example, analyte (e.g., glucose) monitoring and management system in accordance with one embodiment of the present invention is shown. The subject invention is further described primarily with respect to a glucose monitoring system for convenience and such description is in no way intended to limit the scope of the invention. It is to be understood that the analyte monitoring system may be configured to monitor a variety of analytes, e.g., lactate, and the like.

[0030] Analytes that may be monitored include, for example, acetyl choline, amylase, bilirubin, cholesterol, chorionic gonadotropin, creatine kinase (e.g., CK-MB), creatine, DNA, fructosamine, glucose, glutamine, growth hormones, hormones, ketones, lactate, peroxide, prostate-specific antigen, prothrombin, RNA, thyroid stimulating hormone, and troponin. The concentration of drugs, such as, for example, antibiotics (e.g., gentamicin, vancomycin, and the like), digitoxin, digoxin, drugs of abuse, theophylline, and warfarin, may also be monitored.

[0031] The data monitoring and management system **600** in one embodiment includes an integrated analyte sensor and data processing unit **610**, a data analysis unit **630** which is configured to communicate with the integrated analyte sensor and data processing unit **610** via a communication link **620**. The data analysis unit **630** may be further configured to transmit and/or receive data to and/or from a data processing terminal **650** via communication link **640**. The data processing terminal **650** in one embodiment may be configured for evaluating the data received by the data analysis unit **630**.

[0032] Referring again to FIG. **6**, also shown is a fluid delivery unit **670** which is operatively coupled to the data processing terminal **650** via communication link **680**, and further operatively coupled to the data analysis unit **630** via communication link **660**, and also, operatively coupled to the integrated analyte sensor and data processing unit **610** via communication link **690**. In one embodiment, the fluid delivery unit **670** may include an external or implantable infusion device such as an insulin infusion pump, or the like, which may be configured to administer insulin to patients, and which may be configured to determine suitable modifications or updates to the medication dispensing profile based on data received from one or more of the integrated analyte sensor and data processing unit **610**, data analysis unit **630**, or data processing terminal **650**, for example, for administering and modifying basal profiles, as well as for determining appropriate boluses for administration based on, among others, the detected analyte levels received from the integrated analyte sensor and data processing unit **610**.

[0033] Furthermore, referring again to FIG. **6**, the one or more of the communication links **620**, **640**, **680**, and **690** may be configured as one or more of a wired or a wireless communication link, for example, including but not limited to RS232 cable connection, a Universal Serial Bus (USB) connection, an RF communication link, an infrared communication link, a Bluetooth enabled communication link, an 802.11x wireless communication link, or an equivalent wireless communication protocol which would allow secure, wireless communication of several units (for example, per HIPPA requirements) while avoiding potential data collision and interference.

[0034] Moreover, it will be appreciated by one of ordinary skill in the art that the data monitoring and management system **600** may include one or more integrated analyte sensor and data processing unit **610**, one or more data analysis unit **630**, one or more fluid delivery unit **670** and one or more data processing terminal **650**. In addition, the one or more integrated analyte sensor and data processing unit **610**, one or more data analysis unit **630**, one or more fluid delivery unit **670** and one or more data processing terminal **650** may be in communication with a remote site over a data network such as the internet for transmitting and/or receiving information associated with the functions and operations of each device. For example, the one or more integrated analyte sensor and data processing unit **610**, one or more data analysis unit **630**, one or more fluid delivery unit **670** and one or more data processing terminal **650** may be in communication with a data network such as the Internet for retrieving and/or transmitting data from a remote server terminal.

[0035] Furthermore, in one embodiment, in a multi-component environment, each device is configured to be uniquely identified by each of the other devices in the system so that communication conflict is readily resolved between the various components within the data monitoring and management system **100**.

[0036] In one embodiment of the present invention, the sensor **106** is physically positioned in or on the body of a user whose analyte level is being monitored. The sensor **106** may be configured to continuously sample the analyte level of the user and convert the sampled analyte level into a corresponding data signal for transmission by the data processing unit **101**. More specifically, in one embodiment, the data processing unit **101** may be configured to perform data processing such as filtering and encoding of data signals, each of which corresponds to a sampled analyte level of the user, for transmission to the data analysis unit **630** via the communication link **620**.

[0037] In one embodiment, the communication link **620** may be configured as a one-way RF communication path from the integrated analyte sensor and data processing unit **610** to the data analysis unit **630**. In such embodiment, the data processing unit **101** of the integrated analyte sensor and data processing unit **610** is configured to transmit the sampled data signals received from the sensor **106** without acknowledgement from the data analysis unit **630** that the transmitted sampled data signals have been received. For example, the data processing unit **101** may be configured to transmit the encoded sampled data signals at a fixed rate (e.g., at one minute intervals) after the completion of the initial power on procedure. Likewise, the data analysis unit **630** may be configured to detect the encoded sampled data signals transmitted from the data processing unit **101** at predetermined time intervals. Alternatively, the communication link **620** may be configured with a bi-directional RF (or otherwise) communication between the data processing unit **101** and the data analysis unit **630**.

[0038] Referring again to FIG. **6**, in one embodiment, the data processing terminal **650** may include a personal computer, a portable computer such as a laptop or a handheld device (e.g., personal digital assistants (PDAs)), and the like, each of which may be configured for data communication with the receiver via a wired or a wireless connection. Additionally, the data processing terminal **650** may further be connected to a remote data network such as over the Internet (not shown) for storing, retrieving and updating data corresponding to the detected analyte level of the user and/or therapy related information such as medication delivery profiles prescribed by a physician, for example.

[0039] FIG. **7** illustrates a block diagram of the data processing unit of the integrated analyte sensor delivery and data processing unit in accordance with one embodiment of the present invention. Referring to FIGS. **1** and **7**, the data processing unit **101** (FIG. **1**) in one embodiment includes an analog interface **701** configured to communicate with the sensor **106** (FIG. **2**), a user input **702**, and a temperature detection section **703**, each of which is operatively coupled to a data processing unit processor **704** such as one or more central processing units (CPUs) or equivalent microprocessor units.

[0040] Further shown in FIG. **7** are a transmitter serial communication section **705** and an RF transceiver **706**, each of which is also operatively coupled to the processor **704**. Moreover, a power supply **707** such as a battery is also provided in the data processing unit **101** to provide the necessary power for the components in the data processing unit **101**. Additionally, as can be seen from the Figure, clock **708** is provided to, among others, supply real time information to the processor **704**.

[0041] Referring back to FIG. **7**, the power supply section **707** in one embodiment may include a rechargeable battery unit that may be recharged by a separate power supply recharging unit (for example, provided in the data analysis unit **630** (FIG. **6**)) so that the data processing unit **101** may be powered for a longer period of usage time. In addition, the temperature measurement (or detection) section **703** of the transmitter unit **102** is configured to monitor the temperature of the skin near the sensor insertion site. The temperature reading may be used to adjust the analyte readings obtained from the analog interface **701**.

[0042] In this manner, in one embodiment, the sensor detected analyte levels are provided to the data processing unit **101** of the integrated analyte sensor and data processing unit **100** (FIG. **1**), for example, as current signals, and which are in turn, converted to respective digital signals for transmission (including, for example, RF transmission) to the data analysis unit **630**, fluid delivery unit **670**, and/or the data processing terminal **650** for further processing and analysis (including drug (e.g., insulin) therapy management, infusion control, and health monitoring and treatment, for example). That is, the monitored analyte data may be used by the patient and/or the patient's healthcare provider to modify the patient's therapy such as an infusion protocol (such as basal profile modifications in the case of diabetics) as necessary to improve insulin infusion therapy for diabetics, and further, to analyze trends in analyte levels for improved treatment.

[0043] Additional detailed description of the data monitoring and management system such as analyte monitoring systems, its various components including the functional descriptions of data processing unit and data analysis unit are provided in U.S. Pat. No. 6,175,752 issued Jan. 16, 2001 entitled "Analyte Monitoring Device and Methods of Use", and in application Ser. No. 10/745,878 filed Dec. 26, 2003 entitled "Continuous Glucose Monitoring System and Methods of Use", each assigned to the Assignee of the present application.

[0044] In the manner described above, in one embodiment, the integrated analyte sensor and data processing unit assembly is configured to integrate an analyte sensor, a sensor introducer mechanism, and a data processing device into a single disposable assembly which allows for simple and accurate sensor deployment to the desired subcutaneous position, and which may be used with one hand by the user or the patient. Accordingly, a separate sensor introducing device such as a separate insertion gun or a separate sensor delivery mechanism is not necessary.

[0045] Furthermore, by integrating the analyte sensor, the introducer as well as the data processing unit into a single assembly, it is possible to have a smaller profile, simpler use application with less packaging thereby achieving cost reduction in manufacturing. Indeed, by reducing the number of components needed for sensor placement, within the scope of the present invention, other benefits such as reduction in material cost, weight, packaging, and associated handling and disposal may be achieved.

[0046] An apparatus including an analyte sensor and a data processing unit in accordance with one embodiment of

the present invention includes a housing, a data processing unit coupled to the housing, an introducer removably coupled to the housing, the introducer including a first portion configured for piercing through a skin layer of a subject, and an analyte sensor coupled to the housing, the analyte sensor including a first portion and a second portion, the first portion of the analyte sensor coupled to the first portion of the introducer, and the second portion of the analyte sensor coupled to the data processing unit, where the first portion of the analyte sensor is configured for transcutaneous placement so as to be in fluid contact with an interstitial fluid of the subject, where the second portion of the analyte sensor is in electrical contact with the data processing unit, and further, where at least a portion of the data processing unit, at least a portion of the introducer and at least a portion of the analyte sensor are coupled to the housing as a single integrated assembly.

[0047] In one embodiment, there is further provided an adhesive layer substantially on a lower surface of the housing, the adhesive layer configured to removably attach the housing to the skin layer of the subject.

[0048] Additionally, a guard segment may be removably coupled to the first portion of the introducer, where the guard segment may be configured to substantially seal the first portion of the introducer.

[0049] In a further aspect, the first portion of the introducer may include a sharp tip for piercing through the skin layer of the subject, wherein when the sharp tip is pierced through the skin layer, the first portion of the analyte sensor is transcutaneously placed under the skin layer of the subject so as to be in fluid contact with the interstitial fluid of the subject.

[0050] In another aspect, the introducer may be configured to decouple from the housing after the first portion of the analyte sensor is transcutaneously positioned under the skin layer of the subject.

[0051] The analyte sensor may include a glucose sensor.

[0052] The data processing unit in one embodiment may include a data transmission unit configured to receive one or more signals associated with an analyte level of the subject from the analyte sensor, where the data transmission unit may be configured to wirelessly transmit data associated with the one or more signals received from the analyte sensor, where the data transmission unit may include an RF data transmission unit.

[0053] An integrated assembly in accordance with another embodiment of the present invention includes a housing, a data processing unit substantially disposed within the housing, an introducer removably coupled to the housing, at least a portion of the introducer disposed within the housing, and an analyte sensor coupled to the housing, a first portion of the analyte sensor configured for subcutaneous placement and in fluid contact with an interstitial fluid of a subject, and a second portion of the analyte sensor disposed within the housing and in electrical communication with the data processing unit.

[0054] The second portion of the analyte sensor in one embodiment may be permanently coupled to the data processing unit.

[0055] In another aspect, the introducer may be configured to decouple from the housing after the second portion of the analyte sensor is transcutaneously positioned under the skin layer of the subject.

[0056] An insertion kit in accordance with still another embodiment includes a housing, a data processing unit substantially disposed within the housing, an introducer removably coupled to the housing, at least a portion of the introducer disposed within the housing, and an analyte sensor coupled to the housing, a first portion of the analyte sensor configured for subcutaneous placement and in fluid contact with an interstitial fluid of a subject, and a second portion of the analyte sensor disposed within the housing and in electrical communication with the data processing unit.

[0057] In one embodiment, the introducer may be manually removed from the housing.

[0058] Various other modifications and alterations in the structure and method of operation of this invention will be apparent to those skilled in the art without departing from the scope and spirit of the invention. Although the invention has been described in connection with specific preferred embodiments, it should be understood that the invention as claimed should not be unduly limited to such specific embodiments. It is intended that the following claims define the scope of the present invention and that structures and methods within the scope of these claims and their equivalents be covered thereby.

What is claimed is:

1. An apparatus including an analyte sensor and a data processing unit, comprising:

a housing;

a data processing unit coupled to the housing;

an introducer removably coupled to the housing, the introducer including a first portion configured for piercing through a skin layer of a subject; and

an analyte sensor coupled to the housing, the analyte sensor including a first portion and a second portion, the first portion of the analyte sensor coupled to the first portion of the introducer, and the second portion of the analyte sensor coupled to the data processing unit;

wherein the first portion of the analyte sensor is configured for transcutaneous placement so as to be in fluid contact with an interstitial fluid of the subject; and

wherein the second portion of the analyte sensor is in electrical contact with the data processing unit; and further

wherein at least a portion of the data processing unit, at least a portion of the introducer and at least a portion of the analyte sensor are coupled to the housing as a single integrated assembly.

2. The apparatus of claim **1** further including an adhesive layer provided substantially on a lower surface of the housing, the adhesive layer configured to removably attach the housing to the skin layer of the subject.

3. The apparatus of claim **1** further including a guard segment removably coupled to the first portion of the introducer.

4. The apparatus of claim **3** wherein the guard segment is configured to substantially seal the first portion of the introducer.

5. The apparatus of claim **1** wherein the first portion of the introducer includes a sharp tip for piercing through the skin layer of the subject, wherein when the sharp tip is pierced through the skin layer, the first portion of the analyte sensor

is transcutaneously placed under the skin layer of the subject so as to be in fluid contact with the interstitial fluid of the subject.

6. The apparatus of claim **1** wherein the introducer is configured to decouple from the housing after the first portion of the analyte sensor is transcutaneously positioned under the skin layer of the subject.

7. The apparatus of claim **1** wherein the analyte sensor includes a glucose sensor.

8. The apparatus of claim **1** wherein the data processing unit includes a data transmission unit configured to receive one or more signals associated with an analyte level of the subject from the analyte sensor.

9. The apparatus of claim **8** wherein the data transmission unit is configured to wirelessly transmit data associated with the one or more signals received from the analyte sensor.

10. The apparatus of claim **9** wherein the data transmission unit includes an RF data transmission unit.

11. An integrated assembly, comprising:

a housing;

a data processing unit substantially disposed within the housing;

an introducer removably coupled to the housing, at least a portion of the introducer disposed within the housing; and

an analyte sensor coupled to the housing, a first portion of the analyte sensor configured for subcutaneous placement and in fluid contact with an interstitial fluid of a subject, and a second portion of the analyte sensor disposed within the housing and in electrical communication with the data processing unit.

12. The assembly of claim **11** wherein the second portion of the analyte sensor is permanently coupled to the data processing unit.

13. The assembly of claim **11** wherein the introducer is configured to decouple from the housing after the second portion of the analyte sensor is transcutaneously positioned under the skin layer of the subject.

14. The assembly of claim **11** wherein the analyte sensor includes a glucose sensor.

15. The assembly of claim **11** wherein the data processing unit includes a data transmission unit configured to receive one or more signals associated with an analyte level of the subject from the analyte sensor.

16. The assembly of claim **15** wherein the data transmission unit is configured to wirelessly transmit data associated with the one or more signals received from the analyte sensor.

17. An insertion kit, comprising:

a housing;

a data processing unit substantially disposed within the housing;

an introducer removably coupled to the housing, at least a portion of the introducer disposed within the housing; and

an analyte sensor coupled to the housing, a first portion of the analyte sensor configured for subcutaneous placement and in fluid contact with an interstitial fluid of a subject, and a second portion of the analyte sensor disposed within the housing and in electrical communication with the data processing unit.

18. The kit of claim **17** wherein the introducer is manually removed from the housing.

19. The kit of claim **17** further including an adhesive layer provided substantially on a lower surface of the housing, the adhesive layer configured to removably attach the housing to the skin layer of the subject.

20. The kit of claim **17** further including a guard segment removably coupled to the first portion of the introducer.

* * * * *