UNITED STATES PATENT AND TRADEMARK OFFICE

BEFORE THE PATENT TRIAL AND APPEAL BOARD

DEXCOM, INC.,
Petitioner,

v.

ABBOTT DIABETES CARE INC.,
Patent Owner.

Case No. IPR2023-01396

U.S. Patent No. 11,266,335

PATENT OWNER'S PRELIMINARY RESPONSE

TABLE OF CONTENTS

I. INTRODUCTION 1

II. BACKGROUND 15

A. Overview of the 335 Patent 15

B. Prosecution of the 335 Patent 20

III. OVERVIEW OF PETITION CHALLENGES 22

A. Petitioner's Cited References 23

1. Stafford (Ex. 1009) 23

2. Raymond (Ex. 1010) 25

3. Turner (Ex. 1011) 28

4. Say (Ex. 1012), Bickoff (Ex. 1013), and Shah (Ex. 1014) 31

IV. LEVEL OF ORDINARY SKILL IN THE ART 31

V. CLAIM CONSTRUCTION 32

VI. PETITIONER HAS NOT MET ITS BURDEN OF PROVING A REASONABLE LIKELIHOOD THAT THE CHALLENGED CLAIMS ARE UNPATENTABLE 32

A. Legal Standard 35

B. Ground 1: The Combination of Stafford and Raymond Does Not Render Claim 1 Obvious 36

1. Raymond Does Not Disclose A Plurality of Recesses 37

2. It Would Not Have Been Obvious To Add The Claimed Plurality Of Recesses To Stafford + Raymond 41

C. Turner Does Not Solve The Deficiency In Stafford + Raymond (Grounds 1 and 2) 51

D. Grounds 3-8 Fail for the Same Reasons As Grounds 1 and 2 66

VII. CONCLUSION.....66

TABLE OF AUTHORITIES

Cases

Broadcom Ltd. v. Invensas Corp.,
IPR2017-00831, Paper 8 (P.T.A.B. July 25, 2017) 1, 35

CFMT, Inc. v. YieldUp Int'l Corp.,
349 F.3d 1333 (Fed. Cir. 2003) 35

Current Lighting Solution, LLC v. ALSI Holdings, LLC,
IPR2023-00125, Paper 12 (P.T.A.B. May 3, 2023) 51

Graham v. John Deere Co.,
383 U.S. 1 (1966) 35

In re Aslanian,
590 F.2d 911 (CCPA 1979) 44

In re Hedges,
783 F.2d 1038 (Fed. Cir. 1986) 36

In re Kubin,
561 F.3d 1351 (Fed. Cir. 2009) 35

In re Magnum Oil Tools Int'l,
829 F.3d 1364 (Fed. Cir. 2016) 35

In re NTP, Inc.,
654 F.3d 1279 (Fed. Cir. 2011) 36

In re Nuvasive, Inc.,
842 F.3d 1376 (Fed. Cir. 2016) 36

In re Schweickert,
676 F. App'x 988 (Fed. Cir. 2017) 8, 42

In re Wesslau,
353 F.2d 238 (CCPA 1965) 36

Intel Corp. v. Qualcomm Inc.,
IPR2018-01429, Paper 43 (P.T.A.B. Jan. 30, 2020) 36

Invue Security Prods., Inc. v. Mobile Tech, Inc.,
PGR2019-00019, Paper 7 (P.T.A.B. May 29, 2019).....52

IPDATATEL, LLC v. ICN Acquisition, LLC,
IPR2018-01819, Paper 19 (P.T.A.B. Apr. 17, 2019) 35

KSR Int'l v. Teleflex Inc.,
550 U.S. 398 (2007).....36

Perfect Web Techs., Inc. v. InfoUSA, Inc.,
587 F.3d 1324 (Fed. Cir. 2009) 50

Polaris Indus. V. Arctic Cat, Inc.,
882 F.3d 1056 (Fed. Cir. 2018) 51

Power Integration, Inc. v. Fairchild Semiconductor Int'l, Inc.,
711 F.3d 1348 (Fed. Cir. 2013) 51

Sony Corp. v. Fujifilm Corp.,
IPR2018-01751, Paper 14 (P.T.A.B. Apr. 12, 2019) 42, 49

TQ Delta, LLC v. Cisco Sys., Inc.,
942 F.3d 1352 (Fed. Cir. 2019) 61

Vizio, Inc. v. ITC,
605 F.3d 1330 (Fed. Cir. 2010) 35

Statutes

35 U.S.C. § 312.....52

35 U.S.C. § 314.....32

TABLE OF EXHIBITS

Exhibit No.	Description
2001	EPO Summons and Preliminary Opinion for Opposition Re EP 3 766 408 B1 (20195922.8) (Sept. 21, 2023)
2002	European Patent No. 3 766 408 B1
2003	European Patent No. 3 928 688 B1

I. INTRODUCTION

Patent Owner Abbott Diabetes Care Inc. submits this Preliminary Response to the Petition filed by DexCom, Inc. ("Petitioner") requesting *inter partes* review of claims 1-4, 8-9, and 11-27 (the "Challenged Claims") of U.S. Patent No. 11,266,335 (the "335 Patent").

The Petition fails substantively for many reasons. However, for purposes of this Preliminary Response, Patent Owner will not step through all of them. That is because the Petition fails for at least one fundamental reason. Even assuming Petitioner's proposed combinations would be made—and to be clear, they would not be—they fail to meet all of the limitations of the 335 Patent's sole independent claim. *See, e.g., Broadcom Ltd. v. Invensas Corp.*, IPR2017-00831, Paper 8 at 2 (P.T.A.B. July 25, 2017) (denying institution "because the Petition does not account properly for all the limitations of independent claims 1 and 9"). Consequently, Petitioner is not likely to succeed in proving that any Challenged Claim is unpatentable.

The Challenged Claims are generally directed to a novel "glucose monitoring assembly" comprising an "inserter" and an "on body electronics unit." Ex. 1001 at claim 1. For simplicity, hereinafter, Patent Owner will refer to on-body units as "OBUs." The OBU of the Challenged Claims specifically includes a "housing" as well as "electronics coupled with [a] glucose sensor." *Id.* As for the inserter, it includes, *inter alia*, a "sharp" (also known as a needle) to help insert the glucose

sensor into the subject. *Id.* The claimed inserter secures the OBU in an initial proximal position within the inserter via "detachabl[e] engage[ment]" with "a plurality of recesses disposed on [the] periphery of the [OBU] housing." *Id.*

For example, Figure 131 from the 335 Patent below shows the OBU (cyan) secured in a proximal position within the inserter (a portion of the inserter is shown in cross-section), while Figure 135 shows the plurality of spaced-apart recesses 3766 (magenta) disposed on the periphery of the OBU housing 322. Figure 135 also shows gripping arms 3762' (yellow) of the inserter that detachably engage with the OBU recesses:

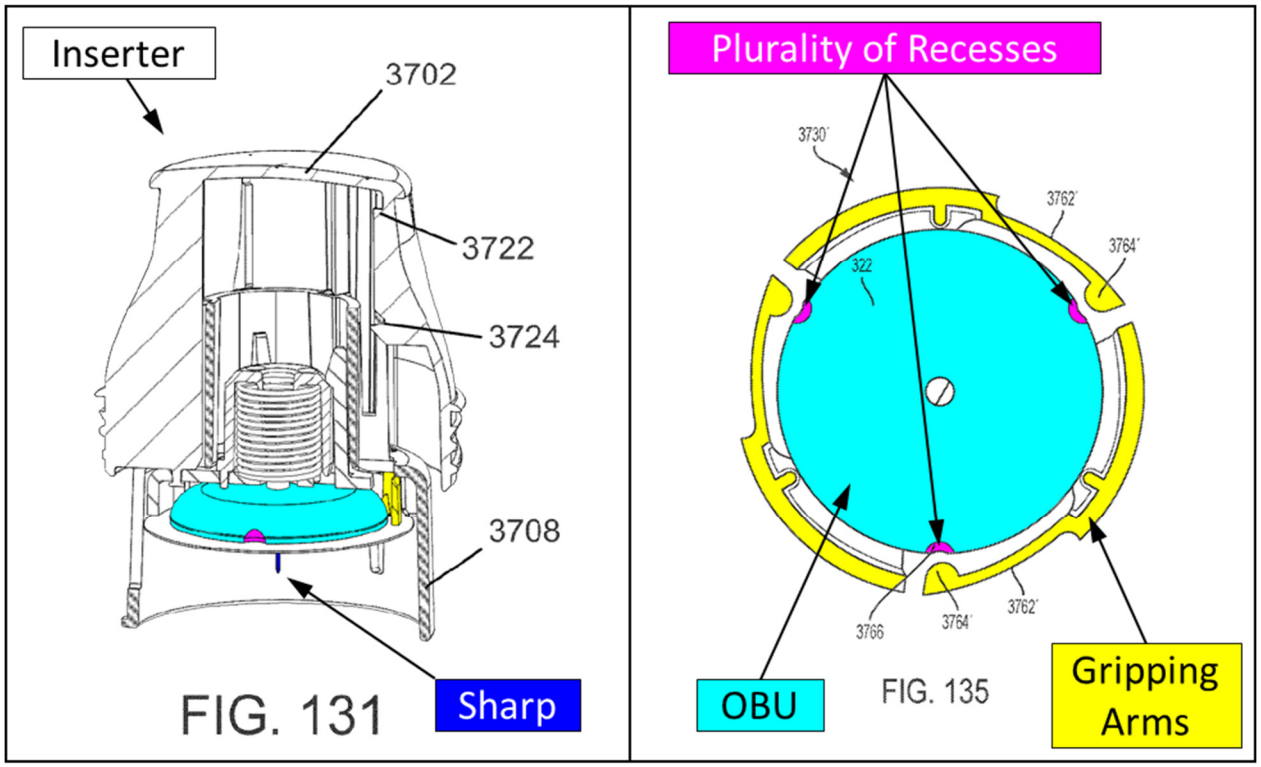

Id. at Figs. 131, 135 (annotations added). The inserter is configured to advance the OBU and sharp from the proximal position to a distal position such that the sharp inserts the sensor into the subject. *Id.* at claim 1. The sharp is then retracted back into the inserter, leaving the OBU on the skin as reflected, *e.g.*, in Figures 132 (before sharp retraction) and 134 (after sharp retraction):

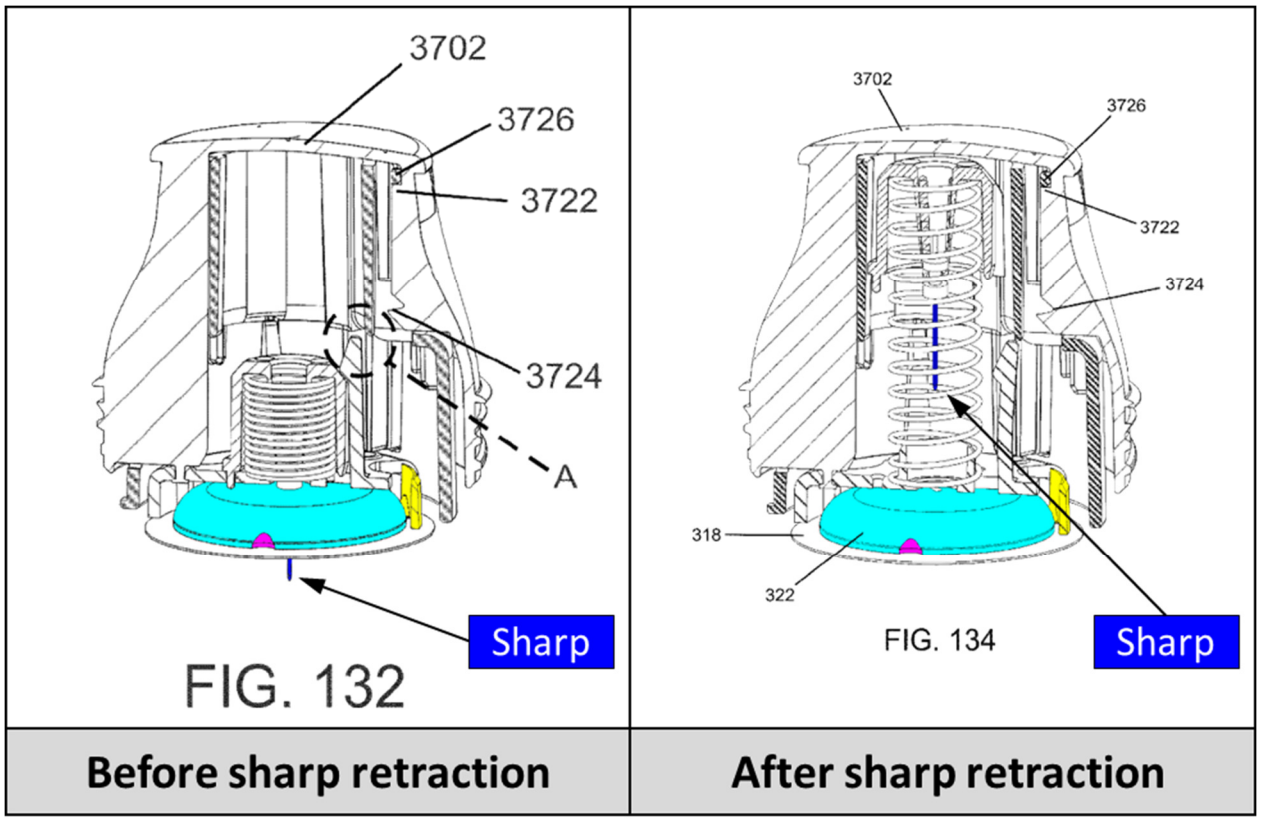

Id. at claim 1, Figs. 132, 134 (annotations added). For purposes of this Preliminary Response, the relevant limitation of the Challenged Claims missing from Petitioner's combinations is: "***a plurality of recesses disposed on [the] periphery of the [OBU] housing [that] is detachably engaged with the inserter***" (hereinafter, "the plurality of peripheral OBU housing recesses" limitation).

The Petition asserts eight Grounds. Pet. at 3-4. Stafford (Ex. 1009) is the primary reference in each Ground. Petitioner correctly acknowledges that Stafford's data processing unit 101 housing lacks the claimed "plurality of peripheral OBU housing recesses" limitation. *See, e.g.*, *id.* at 19-20, 25, 28-34. Petitioner instead relies on Raymond (Ex. 1010) and Turner (Ex. 1011)—two fluid delivery devices, not glucose sensor inserters—for this missing limitation. *See id*. at 28-34. Petitioner also cites "background" references purportedly showing the knowledge of a person of skill in in the art.[1] *See, e.g.*, *id.* at 11-12, 30. But none of these references fills in the missing "plurality of peripheral OBU housing recesses" limitation. Indeed, Petitioner resorts to inaccurate and/or misleading characterizations of this cited art to try to create the impression that the missing limitation was known.

Petitioner first relies on Raymond for the "plurality of peripheral OBU housing recesses" limitation. Indeed, Petitioner repeatedly represents that Raymond discloses a plurality of OBU housing recesses. *See, e.g.*, *id.* at 17-18, 20, 28-29. ***But it does not***. Raymond is directed to an assembly for inserting a cannula of an infusion device that serves as a conduit for delivering medication to the user. Raymond says

[1] Some Grounds cite additional references, but not for the "plurality of peripheral OBU housing recesses" limitation. As such, they will not be addressed in this Preliminary Response.

nothing about glucose sensors, sensor electronics (on-body or otherwise), or the like. Setting aside those differences, Raymond's infusion device base 122, or alleged OBU, does not have any recesses. Instead, the base 122 has only a single annular rim. This annular rim is shown, for example, in Figure 18 of Raymond:

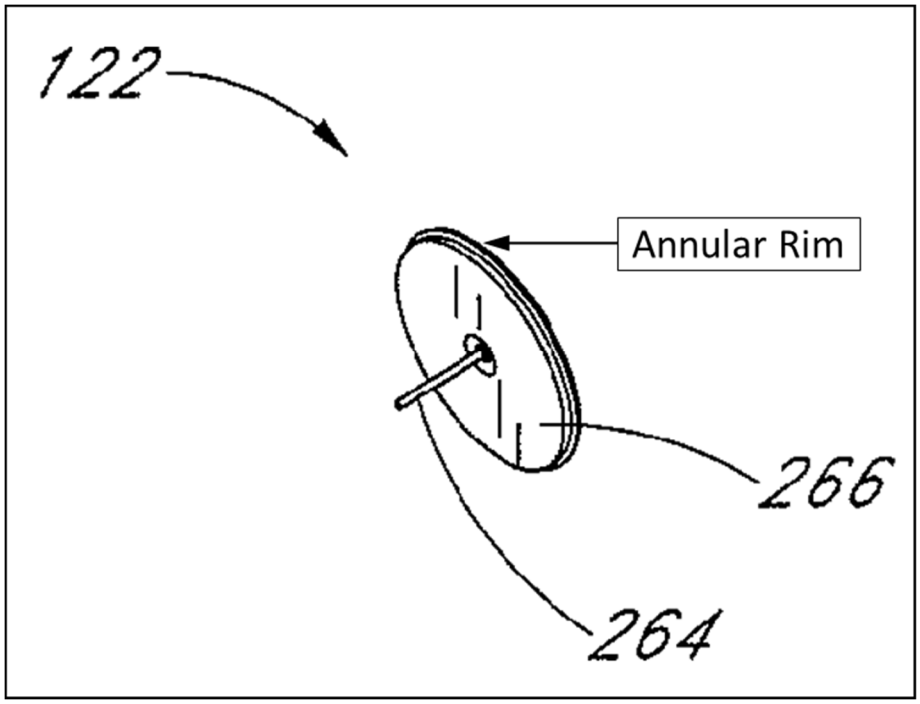

Ex. 1010 at Fig. 18 (excerpt, annotations added). Knowing that Raymond's lack of OBU housing recesses is fatal to its proposed combinations, Petitioner creates the erroneous impression that Raymond discloses a plurality of OBU recesses by using cross-sectional views from Raymond and labeling multiple alleged recesses. Here is one sample annotated image that Petitioner uses in its Petition:

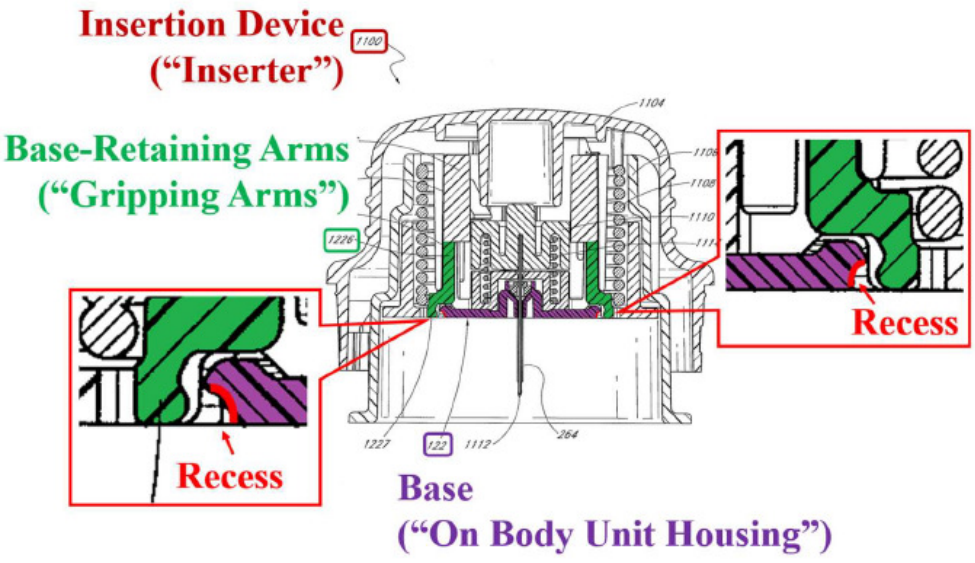

Raymond, FIG. 29 (annotated)

See, e.g., Pet. at 29, 42. However, what Petitioner labels as multiple recesses ***truly are not recesses at all***—it is simply a cross-section of Raymond's OBU annular rim. *See also* Ex. 1010 ¶123 (in some embodiments "the base-retaining feet 1227 extend beneath a bottom edge of the base 122"). It is surprising that Petitioner continues to advance this mischaracterization of Raymond given that the Opposition Division of the European Patent Office ("EPO") rejected Petitioner's same inaccurate argument in an opposition involving a patent related to the 335 Patent:

> D10 [Raymond] does not appear to disclose any on-body electronics. Contrary to Opponent 1's position, however, ***it also seems not to disclose recesses on an on-body unit housing***.
>
> Opponent 1 [*i.e.*, Petitioner] refers to fig. 26 and 29 as showing recesses; however, feet 1227 of arms 1226 ***do not appear to engage***

> ***base 122 at a plurality of recesses***. Paragraph [0123] merely discloses that the feet clamp, grasp or otherwise engage the base, and ***the base is not shown to have recesses*** (see also fig. 18). Rather, it appears that the feet grasp ***a rim on the base***.
>
> ***
>
> For the above reasons, claim 1 as granted appears to involve an inventive step.

Ex. 2001 at ¶¶21.2, 21.5.[2]

Tacitly acknowledging that Raymond lacks OBU housing recesses, Petitioner then alternatively asserts that it would be obvious to add OBU housing recesses to its Stafford + Raymond combination (even though neither reference discloses them). Pet at 29-30. Petitioner alleges a skilled person would do so "to securely engage the [OBU] to the inserter." *Id.* at 30; *see also, e.g.*, *id.* at 11-12. However, as an initial matter, Petitioner's assertion makes no sense because the change proposed by Petitioner is unnecessary. As Petitioner and its expert admit, Raymond's pre-existing design already secures the OBU within its inserter. Pet. at 16; Ex. 1003 ¶41 (same). There is no suggestion that Raymond's securing is inadequate or deficient in any way (nor does Petitioner so allege). There is simply no need to make Raymond's complex assembly even more complex. *See, e.g.*, *In re Schweickert*, 676 F. App'x

[2] All emphasis herein is added unless indicated otherwise.

988, 995 (Fed. Cir. 2017) (reversing Board's obviousness determination where proposed modification of prior art is "unnecessary" because prior art "already" performs function of proposed additional feature and "would do little more than add unwanted cost and complexity to the system").

Even ignoring that fundamental flaw in Petitioner's arguments, Petitioner's Grounds still fail. To prop up its assertion that it would be obvious to add a plurality of peripheral OBU housing recesses to Stafford + Raymond, Petitioner alleges that it was commonly "known" to use such recesses to secure an OBU to an inserter. *See, e.g.*, Pet. at 11-12, 30. As purported proof, Petitioner cites five sample references allegedly disclosing this feature. *See, e.g.*, *id.* at 11 (citing Exs. 1018, 1040, 1042, 1057, 1011), 30. But yet again, Petitioner's assertion is both misleading and wrong. First, for four of the five references, Petitioner cites the substantively identical relevant disclosure.[3] *Id.* (citing Exs. 1018, 1040, 1042, 1057); *see also infra* §VI.B.2 (comparing cited excerpts). In other words, the disclosure from these four references is truly just one disclosure. Even worse, contrary to the impression created by Petitioner's excerpted quotes from these four references, ***they do not disclose OBU housing recesses at all*** (let alone a plurality of them on the periphery of the OBU

[3] At least three of the four references are from the same assignee and share common applications in their priority chain. *See* Exs. 1018, 1040, 1042.

housing as required by the Challenged Claims). For example, Petitioner quotes one of the references as follows:

> [T]he safety lock mechanism comprises ... preferably a pair of safety lock arms .... Each safety lock arm includes a cam lobe for engaging an appropriately shaped recess of the ***insertion set***.

Pet. at 11 (quoting [0011] of Ex. 1018; brackets and ellipses in original); *see also, e.g., id.* at 11 (equivalent quote from Ex. 1057), 30 (quoting Ex. 1018). From this quote, the reader is incorrectly led to believe that the recited "insertion set" is the OBU. Not so. In those four references, the "insertion set" referred to is actually a combination of (a) a needle hub coupled to a needle and (b) an OBU housing (where the needle hub and needle do not remain on the body). *See, e.g.*, Ex. 1018 at [0119] (referring to "the hub 18 and housing 20 of the insertion set"); *compare id.* at [0011]-[0012], *with* [0119]. Critically, the "recess" cited by Petitioner in these references is ***not an OBU housing recess*** (nor is it a ***plurality*** of recesses). Indeed, it is not a recess ***in any component***. Rather, the singular feature in the needle hub-OBU housing assembly that is referred to as a "recess" (101 below) truly is a space ***between two components*** (*i.e.*, the needle hub 18 (blue below) and the housing 20 (red below)):

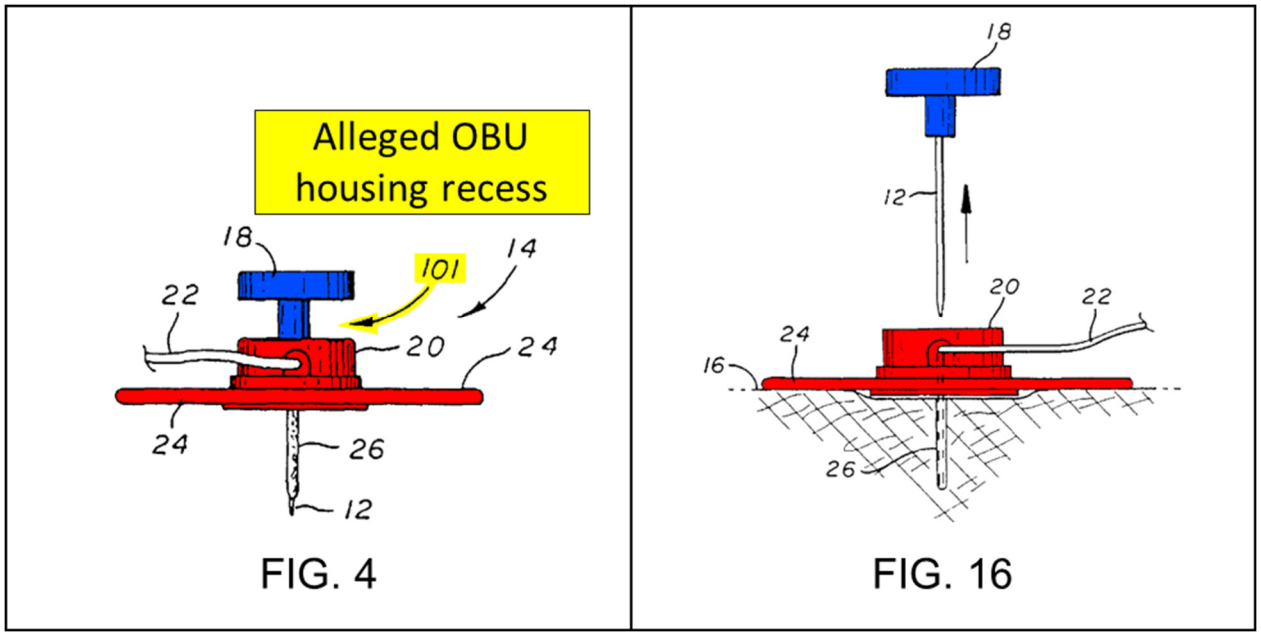

Ex. 1018 at Figs. 4 (excerpt, annotations added), 16; *see also id.* at [0119] (describing how "safety lock arms 94" fit into "a recess 101 defined between the hub 18 and housing 20 of the insertion set"). In short, these four "background" references do not address the missing "plurality of peripheral OBU housing recesses" limitation. To the contrary, they do not show any OBU housing recesses at all (let alone a plurality). Again, the Opposition Division of the EPO has already rejected Petitioner's same factually inaccurate argument:

> D1 [same as Petitioner's Ex. 1018] does not appear to disclose a plurality of recesses on an on-body unit housing, comprising a first recess in a spaced relationship to a second recess.
>
> Opponent 1 [*i.e.*, Petitioner] refers to element 101 in fig. 7 of D1 as recesses. What is referred to as recess 101 in D1 is, however, merely a single spacing between hub 18 and housing 20, compare fig. 4.

Ex. 2001 at ¶21.1.

Still needing to fill the "plurality of peripheral OBU housing recesses" gap in its argument, Petitioner looks for any reference that discloses OBU housing recesses regardless of their location or purpose. That last reference is Turner. *See* Ex. 1011. Turner is directed to a fluid delivery device comprising (a) a needle hub 74 (called "insertion device hub 74") (blue below) coupled to a needle 72 (green below) and (b) a body 20 (the alleged OBU) (red below) with a cannula for delivering fluid to a patient:

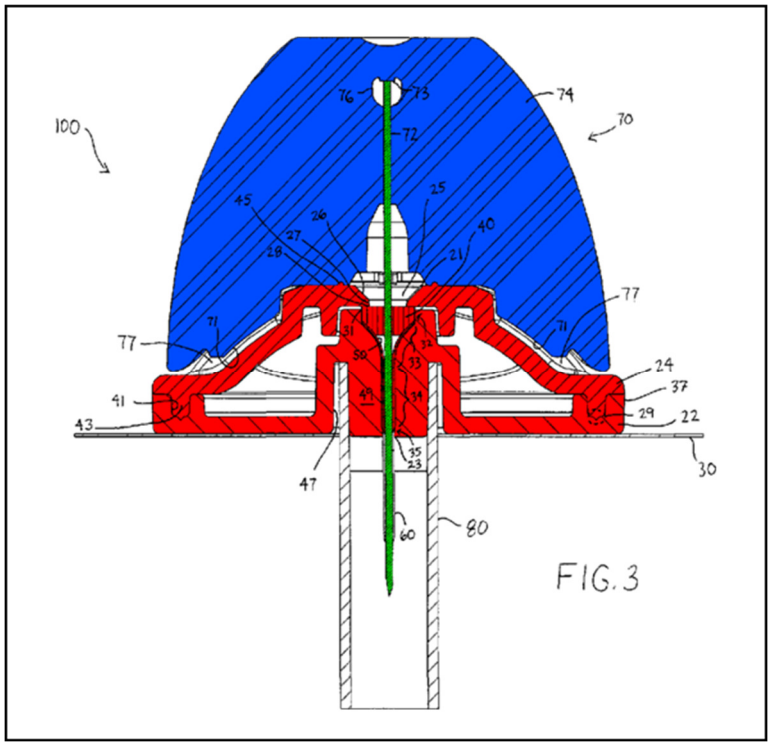

Id. at Fig. 3, [0067-68]. Turner says nothing about glucose sensors, sensor electronics (on-body or otherwise), or the like. Setting aside those differences, for some Grounds Petitioner purports to cite Turner as a background reference (*i.e.*, it is

the fifth of the five allegedly "known" references mentioned above). Pet. at 11-12, 31-32. In other Grounds, Petitioner expressly cites Turner. *See* Grounds 2, 4, 6, 8. Either way, the end result is the same—Turner does not fill the gap.

As an initial matter, the cited Turner recesses (orange below) are vertically-extending recesses on the upper surface of Turner's OBU (closer to the center), not on the housing periphery (as the Challenged Claims require):

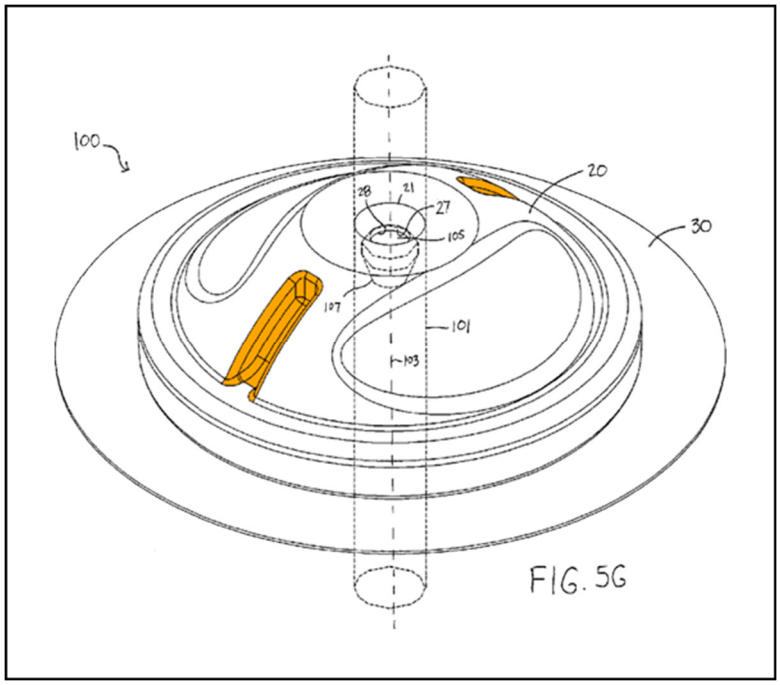

Ex. 1011 at FIG. 5G. This recess location and orientation is not happenstance—it is a necessity of Turner's design (as explained later). *See infra* §VI.C.

Further, Petitioner argues that a skilled person would add Turner's recesses to Stafford + Raymond to "secure" the OBU to the inserter. *See, e.g.*, Pet. at 11-12 (citing Turner to allegedly show that "plural recesses for securing transcutaneous

medical devices to an inserter was known") (capitalization removed), 19 ("[Turner's] protrusions and recesses are configured to secure the fluid delivery device in a particular position relative to the insertion device."). But as noted above, such an addition is unnecessary—Raymond's pre-existing inserter already secures the OBU (as Petitioner admits). More critically, the cited Turner "recesses" are not for securing an OBU within an inserter via detachable engagement. Indeed, they are not for securing the OBU to anything at all.[4] Rather, the cited Turner recesses serve an entirely different purpose, *i.e.*, to prevent rotation between Turner's ***needle hub*** and ***OBU***. *See, e.g.*, Ex. 1011 at [0069].

Knowing these facts are fatal to its Turner-based combinations, Petitioner alternatively argues that a skilled person would use Turner's cited recesses to prevent rotation between the ***OBU*** and ***inserter*** of Stafford + Raymond. Pet. at 32; *see also id.* at 25. But this argument not only fails to address the claimed inventions (*e.g.*, which are directed to ***securing*** the OBU within the inserter), it also ignores the cited Turner teaching. Turner teaches preventing rotation between ***the needle hub and an OBU***, not an OBU and an inserter (wherein the inserter advances the OBU from a

[4] Turner does teach securing its OBU to the needle hub, but does so via a friction fit between the needle and the septum 40 of the OBU, not via Turner's recesses. *See infra* §VI.C.

proximal position within the inserter to a distal position). As explained in §VI.C below, this is just one of many reasons why Petitioner's last-ditch Turner-based "anti-rotation" argument fails.

In short, Petitioner simply ignores the specific location and purpose of Turner's recesses. Instead, Petitioner places them in a self-serving location and orientation of its choosing—and for a different purpose than taught by Turner—to try to meet the Challenged Claims. That is improper hindsight and unsupportable. Notably, once again, the EPO's Opposition Division rejected Petitioner's same attempts to misapply Turner's inapposite teachings:

> Opponent 2 [Petitioner's related German entity] argues that D21 [Turner] discloses in fig. 2A and paragraph [0069] protrusions (71) on the insertion device (70) [*i.e.*, the needle hub coupled to the needle] that extend to engage recesses (77) in the cap element (24) of body (20). According to [Turner] however, ***the protrusions and recesses serve to prevent rotation of the insertion device (70) [needle hub with needle] relative to the body (20)***. In contrast, the gripping arms and recesses according to granted claim 1 serve to hold the on-body housing (322) in place and to maintain the proper height location of the on-body housing (322), see paragraph [0258] of the original application and granted claim 1: " ... gripping arms configured to be engaged with a corresponding recess ... <u>when the on body electronics unit is in the proximal position</u>"). ***It thus appears that the skilled person would not consult [Turner] when seeking means for holding the on-body unit housing of D14 in place***.

Ex. 2001 at ¶21.3 (underlining in original).

Finally, Petitioner alleges that Patent Owner made "admissions" about Turner in a German proceeding involving an unrelated patent. Pet at 32-33. Tellingly, Petitioner provides no context or details about these alleged admissions. That is no accident. That is because, when the proper context and details are provided, it is clear that Patent Owner's purported "admissions" in fact reinforce Patent Owner's positions herein and further refute Petitioner's Grounds. *See infra* §VI.C.

For at least these reasons, and as further explained below, the Board should deny institution.

II. BACKGROUND

A. Overview of the 335 Patent

The 335 Patent concerns devices for monitoring glucose levels *in vivo* using an electrochemical sensor.

Monitoring the level of glucose is vitally important for diabetes patients. A glucose concentration that is too high or too low may lead to hyperglycemic or hypoglycemic episodes, a serious risk to the patient's health. By monitoring glucose concentration, the patient is able to determine when insulin is needed to reduce glucose levels or when additional glucose is needed to raise the level of glucose. *See, e.g.*, Ex. 1001 at 2:27-36.

A conventional method for determining glucose concentration is the fingerstick method, where the patient draws blood from the fingertip and analyzes it with a test strip several times a day. This technique involves many disadvantages as it does not permit automatic or continuous monitoring of glucose levels and is painful and not always used consistently by the patients. *See, e.g.*, *id.* at 2:37-43 (referring to "pain associated with glucose testing"). All of these disadvantages may result in hyperglycemic or hypoglycemic episodes. Therefore, it is desirable to continuously monitor glucose levels with an implanted sensor.

As noted in the 335 Patent, an increasing number of clinical studies demonstrate a clear correlation between the frequency of blood glucose monitoring and glycemic control. *Id.* Yet many people diagnosed with diabetes do not measure their blood glucose levels as frequently as they should. This is due to a combination of factors including convenience, pain when measuring the blood glucose level, and costs. *Id.*

With this in mind, the 335 Patent provides analyte monitoring devices and systems that are "cost-effective, convenient, and with reduced pain" to promote frequent analyte monitoring to improve blood glucose control. *Id.* at 2:52-58.

More specifically, the 335 Patent describes and claims a continuous glucose monitoring assembly that can provide information to the user about their glucose levels, for example, by sending glucose data to a remote display device. Ex. 1001 at

7:39-65, 48:53-54. The claimed assembly includes, *inter alia*, (i) an inserter that has a sharp (also known as a needle) configured to insert a portion of a glucose sensor into a user, and (ii) an on body unit or "OBU" (as used earlier) that has a housing.[5] *Id*. at 48:55-59. The OBU also includes a glucose sensor and on body electronics coupled therewith. *Id.* at 48:65-49:1. Particularly relevant to this Preliminary Response, the OBU housing has a plurality of spaced-apart recesses disposed on its periphery (*i.e.*, the "plurality of peripheral OBU housing recesses" limitation). *Id*. at 48:59-64. Examples of some of these features are shown in Figures 131 and 135, reproduced below with color added:

[5] As with the Introduction, only the portions of the 335 Patent and Challenged Claims needed to address the issues raised in this Preliminary Response are described. Patent Owner does not attempt to describe all of the details of the claimed inventions.

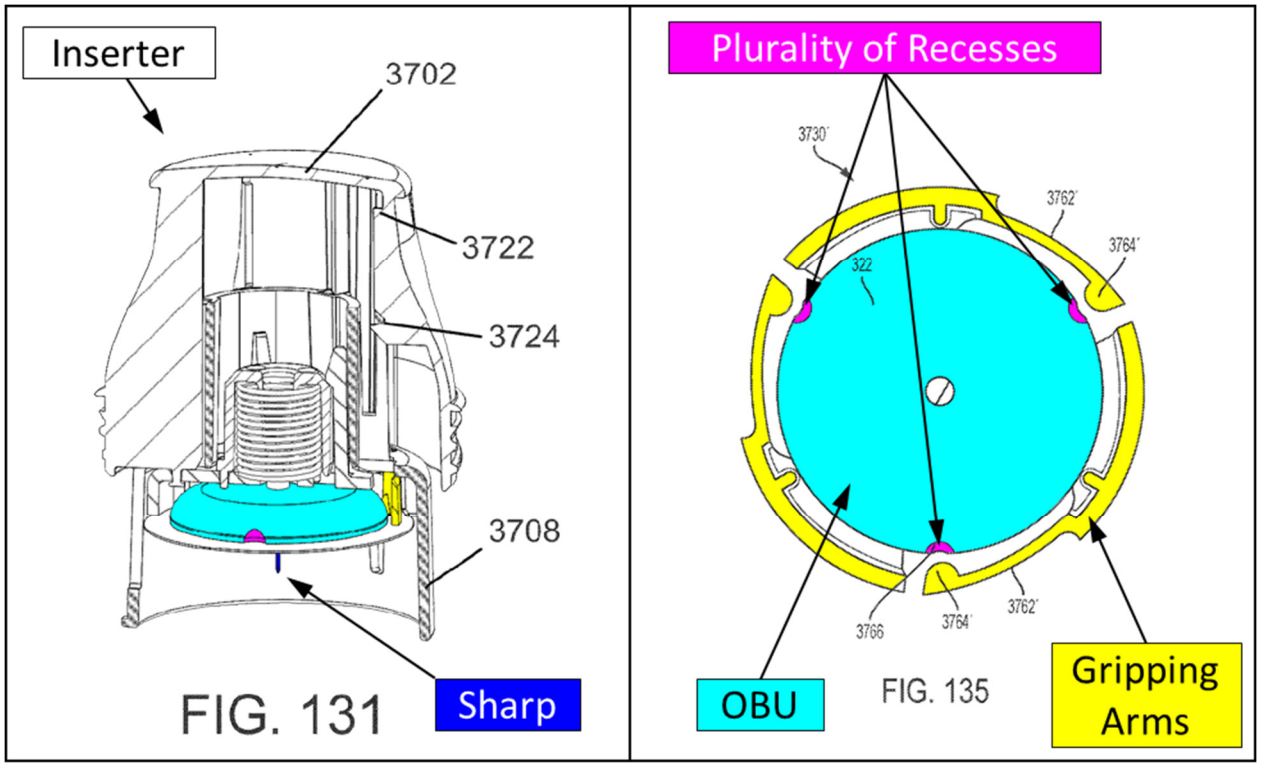

Id. at Figs. 131, 135 (annotations added).

The OBU initially is disposed entirely within the inserter in a proximal positon (as shown, for example, in Figure 131). *Id.* at 49:6-8. The OBU is secured within the inserter via the inserter's "detachabl[e] engage[ment]" with the spaced-apart, peripheral OBU housing recesses. *Id.* at 48:63-64; *see also, e.g., id.* at 44:5-14 (the inserter's detachable engagement with the recesses "hold[s] the [OBU] housing 322 in place" and "maintains the proper height location of the [OBU] housing"), 46:15-23 (the inserter's detachable engagement with the recesses "provides support for the [OBU] housing" before subsequent disengagement and "facilitates the separation of the [OBU] housing 322 from the inserter ....").

The inserter is configured to advance the OBU and sharp from their proximal position within the inserter (Figure 131) to a distal position (Figure 132) as illustrated below. *Id*. at 49:6-8.

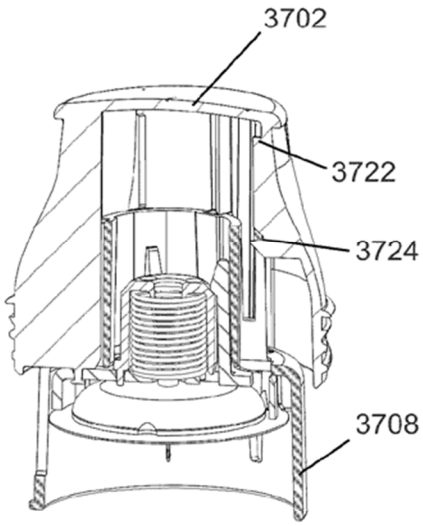 FIG. 131	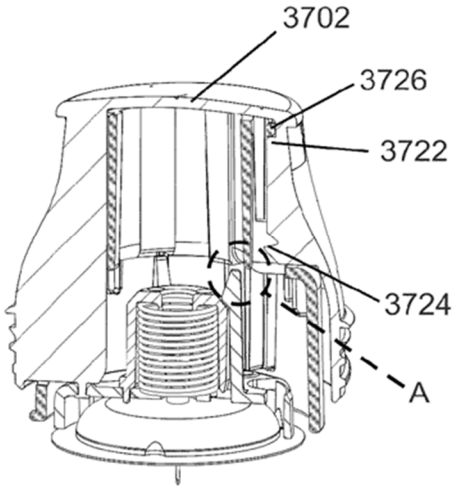 FIG. 132
OBU and sharp in proximal position entirely within the inserter	**Distal position**

Id. at Figs. 131-132. The inserter is further configured to retract the sharp from the distal position to a retracted position entirely within the inserter as illustrated, for example, in Figures 133-134 below. *Id*. at 49:9-11.

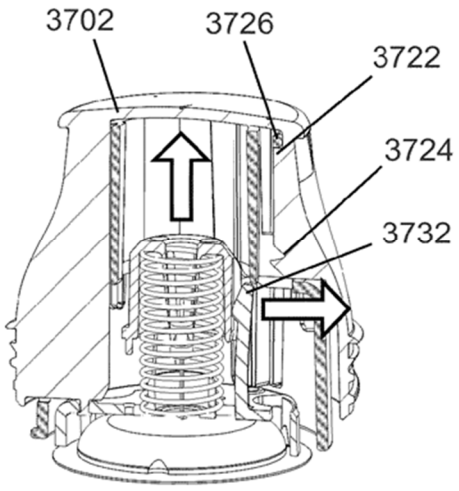 FIG. 133	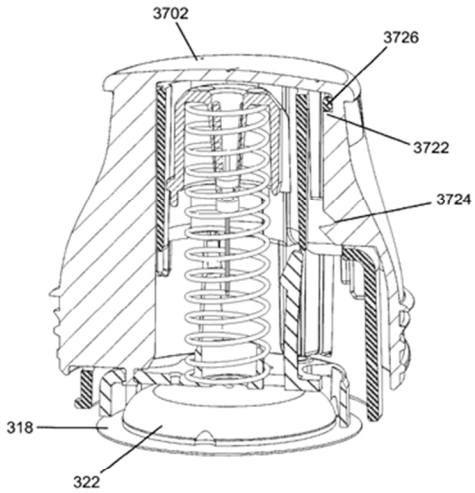 FIG. 134
Retracting sharp from the distal position	**Retracted position entirely within the inserter**

Id. at Figs. 133-134. The user then removes the inserter (now disengaged from the OBU housing recesses), leaving the OBU on the skin and the sensor inserted in the user.

B. Prosecution of the 335 Patent

The 335 Patent issued from U.S. Application No. 17/019,110 (the "110 Application"), filed on September 11, 2020, which was a non-provisional application in a family of patents claiming priority to U.S. Provisional Application Nos. 61/411,262, 61/361,374, 61/345,562, and 61/317,243.

A preliminary amendment was filed with the 110 Application that canceled original claims 1-25 and added new claims 26-48. Ex. 1002 at 232-237. Patent

Owner subsequently filed additional preliminary amendments that amended claims 26, 32, 37, 43, and 47-48, added new claims 49-56, and canceled claims 40-42 and 44. *Id*. at 246-252, 283-289, 307-324.

During prosecution, the Examiner rejected the claims as, among other things, obvious over Thomas-034 (U.S. Pub. No. 2010/0198034) in view of other references in non-final and final office actions. *Id*. at 328-345; 425-442. Patent Owner demonstrated that Thomas-034 did not qualify as prior art via a Rule 131 Declaration, and argued that the claims are otherwise allowable over the art cited in the final office action. *Id*. at 474-488. The Examiner subsequently allowed the 110 Application (finding Thomas-034 was not prior art), and it issued as the 335 Patent on March 8, 2022. *Id*. at 2068-2075, 2126.

The Petition relies on Stafford and Raymond in all eight Grounds and relies on Turner, Say, Shah, and Bickoff as third or fourth references in Grounds 2-7. Nearly all of those references were previously considered during prosecution of the 335 Patent. For example, Stafford, Raymond, Say, and Shah were submitted to the Examiner in an IDS during prosecution of the 335 Patent. *See id.* at 2-40. Petitioner asserts that "there is no indication that the Examiner considered the pertinent teachings, and in particular the combinations relied on herein." Pet. at 4. To the contrary, the Examiner certified that "all references [were] considered except where lined through," and he did not line through Stafford, Raymond, Say, or Shah. *Id.* at

367-403. Therefore, the Examiner considered these references and allowed the Challenged Claims over them.

III. OVERVIEW OF PETITION CHALLENGES

The Petition asserts eight Grounds against the Challenged Claims:

GROUND	CLAIMS	BASIS
1	1–4, 8-9, 11-15, and 17-27	Allegedly obvious under 35 U.S.C. § 103 over Stafford and Raymond
2	1-4, 8-9, 11-15, and 17-27	Allegedly obvious under 35 U.S.C. § 103 over Stafford, Raymond, and Turner
3	16	Allegedly obvious under 35 U.S.C. § 103 over Stafford, Raymond, and Say
4	16	Allegedly obvious under 35 U.S.C. § 103 over Stafford, Raymond, Turner, and Say
5	16	Allegedly obvious under 35 U.S.C. § 103 over Stafford, Raymond, and Bickoff
6	16	Allegedly obvious under 35 U.S.C. § 103 over Stafford, Raymond, Turner, and Bickoff
7	17-18	Allegedly obvious under 35 U.S.C. § 103 over Stafford, Raymond, and Shah
8	17-18	Allegedly obvious under 35 U.S.C. § 103 over Stafford, Raymond, Turner, and Shah

Each of Petitioner's Grounds fails for many reasons. For efficiency purposes, this Preliminary Response addresses one example that applies to all Grounds, *i.e.*,

every Ground lacks the "plurality of peripheral OBU housing recesses" limitation required by claim 1 of the 335 Patent (the only independent claim).

A. Petitioner's Cited References

1. Stafford (Ex. 1009)

Stafford was filed on September 10, 2006, was published on April 24, 2008, and was presented to the Examiner during prosecution of the 335 Patent. Stafford discloses an "assembly of an integrated analyte sensor delivery and data processing unit." Ex. 1009 at [0019]. With reference to Figures 1 and 2 of Stafford below, the assembly 100 includes an analyte sensor 106, a data processing unit 101 provided on an upper surface of an adhesive patch 103, and an introducer comprising a needle wherein the introducer has an upper portion 102A—effectively the needle hub (blue below)—and a lower portion 102B which is the needle (green below). *Id*. at [0019], [0023]. A portion of the sensor is disposed within the lower portion of the introducer. *Id*. at [0023]. The lower portion is covered by a guard 104 (*e.g.*, to prevent inadvertent needle sticks). *Id*. at [0022].

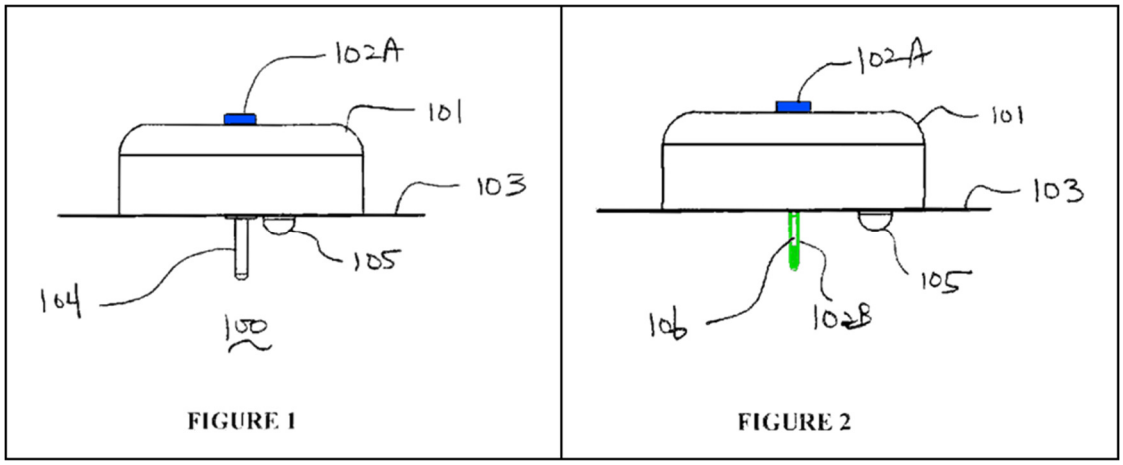

Id. at Figs. 1-2. Importantly for this Preliminary Response, there is no dispute that the housing of Stafford's data processing unit lacks a plurality of recesses on its periphery (indeed, it has no recesses at all).

In operation, Stafford teaches that the user removes the guard 104 from the lower portion of the introducer 102B, places the assembly on the surface of the skin, and applies force to the unit 101 such that the lower portion of the introducer 102B pierces through the skin. *Id*. at [0024]. The user then pulls the upper portion of the introducer 102A away from the skin so that the introducer detaches from the unit 101, and the unit 101 is retained on the skin by the adhesive patch 103 with the sensor 106 positioned under the skin and in contact with the user's bodily fluid. *Id*. The sensor can then sample the user's analyte level, which can be converted into a corresponding data signal for transmission by the data processing unit 101. *Id*. at [0036].

A fundamental aspect of Stafford's assembly is that it is a small, one-handed, simple, and easy-to-use standalone device that does not need to be, and is not intended to be, used with a separate inserter device. *See, e.g.*, *id.* at [0028], [0044] ("Accordingly, a separate sensor introducing device such as separate insertion gun or a separate sensor delivery mechanism is not necessary."), [0045]. As a result, products "within the scope of [Stafford's] invention" achieve numerous advantages (*e.g.*, as compared to assemblies that use a separate inserter) including fewer

components, reduced material cost, reduced manufacturing cost, reduced weight, reduced packaging, reduced handling, reduced waste, and reduced overall assembly size. *Id.* at [0045].

2. Raymond (Ex. 1010)

Raymond was filed on September 10, 2008, was published on May 14, 2009, and was also presented to the Examiner during prosecution of the 335 Patent. Raymond discloses inserters for infusion devices that include a cannula. Ex. 1010 at [0058]. Raymond says nothing about glucose sensors, sensors generally, sensor electronics (on-body or otherwise), glucose sensors pre-connected to electronics, insertion of sensors, or the like (nor does Petitioner so allege).

The Petition relies on the inserter in Figures 29 and 30 of Raymond and how it secures the infusion device base therein. *See* Pet. at 16-18. That inserter (insertion device 1100) is complex, includes many components, and is much larger than the infusion device base 122 (red below) that goes on the user as shown below:

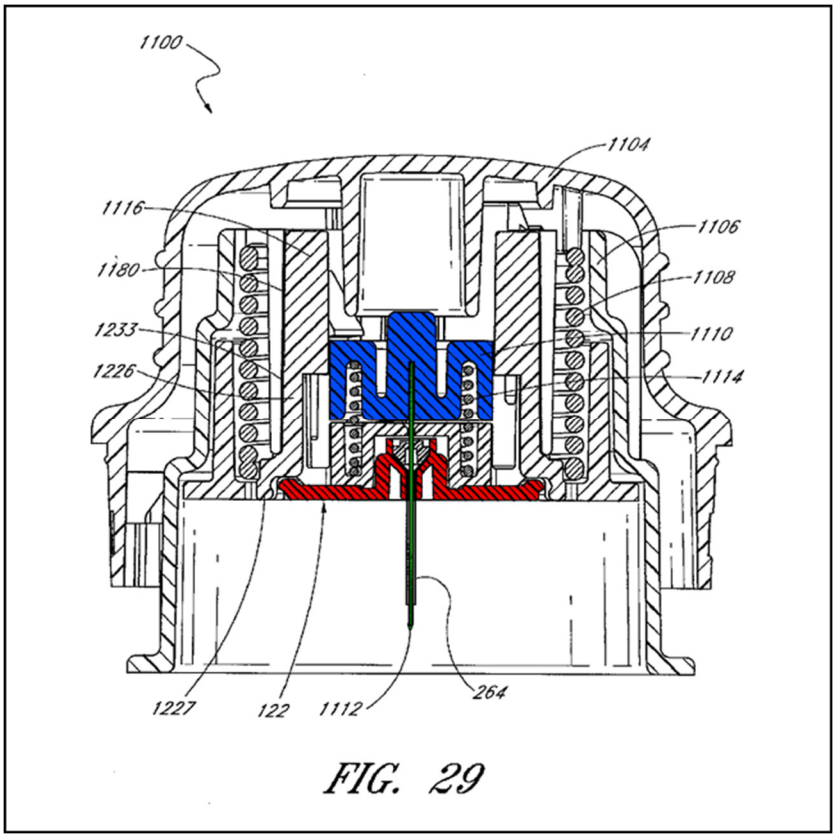

Ex. 1010 at Fig. 29. For example, with respect to Figure 29 shown above, Raymond's inserter includes an actuator 1104, a sleeve 1106, a needle 1112 (green above), a needle hub 1110 (blue above), an insertion spring 1108, a retraction spring 1114, and a shuttle 1116. *Id.* at [0109]. The shuttle 1116 includes feet 1227 that grasp the infusion device base 122 (red above) to secure it to the shuttle 1116. *Id.* at [0123]. Further, unlike Stafford, which uses a needle that is outside and surrounds the sensor to facilitate insertion, Raymond uses a needle that is inside the cannula to insert the cannula. Raymond's inserter also includes a protective cap (not shown above) that is coupled to the actuator and that stores an infusion cap, tubing, and a connector for use with the infusion device. *Id.* at [0058], [0065], [0095], [0098], [1001].

With reference to Figure 18 of Raymond below, the infusion device base 122 is a continuous round disc with an annular rim. The base 122 does not include any recesses, much less "a plurality of recesses" as claimed in the 335 Patent.

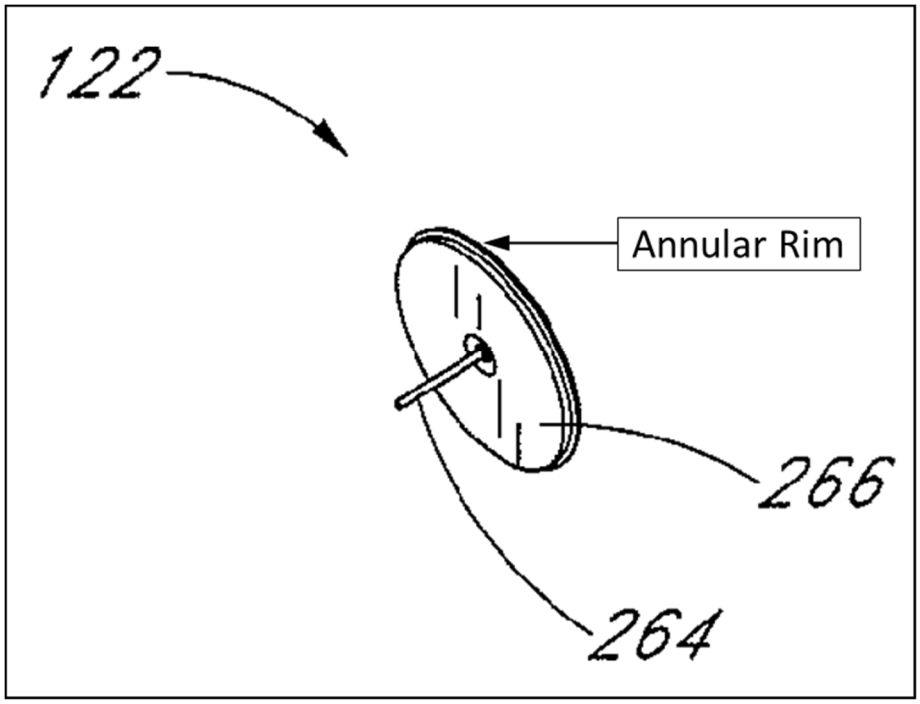

Ex. 1010 at Fig. 18 (excerpt).

In order to use Raymond's device, a user first detaches the protective cap from the inserter, removes the infusion cap, tubing, and connector that are stored in the protective cap, and then connects the connector to an infusion pump and primes the tubing. *Id*. at [0058], [0095], [0098], [1001]. The user then rotates the sleeve 1106 relative to the actuator 1104 from a locked position to an unlocked position and removes a protective paper backing from an adhesive on the base. *Id*. at [0124]. All of these steps necessarily require the use of two hands. A lower surface of the sleeve 1106 is then placed on the skin at an injection site, and the user advances the actuator

1104 toward the skin, which compresses an insertion spring 1108 that advances the shuttle 1116 within the sleeve 1106 to a point where the feet 1227 move away from and release the base 122 of the infusion device. *Id*. at [0106], [0125]-[0126]. At that point, the needle 1112 is then retracted back into the insertion device by the spring 1114, leaving the infusion device against the skin with the cannula extending through the skin. *Id*. at [0106], [0127]. The user then puts the cap back on the actuator 1104 for safe disposal of the needle 1112. *Id*. at [0129].

Thus, Raymond's complex assembly includes numerous components and requires the user to perform many steps, most of which require the use of two hands.

3. Turner (Ex. 1011)

Turner was filed on November 3, 2006 and was published on June 14, 2007. With reference to Figure 3 of Turner below, Turner describes a fluid delivery device 100 that includes a body 20 with a cannula 60 configured to be inserted under the skin. Like Raymond, Turner says nothing about glucose sensors, sensors generally, sensor electronics (on-body or otherwise), glucose sensors pre-connected to electronics, insertion of sensors, or the like (nor does Petitioner so allege). Also, Turner's needle extends inside the component being inserted (*i.e.*, the cannula)—the opposite of what is done with a glucose sensor (like Stafford).

Turner's assembly includes a hub 74 (blue below) that is coupled to a needle 72 (green below). Ex. 1011 at [0066]-[0068]. In other words, hub 74 is a needle hub.

Turner's body 20 (red below) is secured to the hub 74 via friction between the needle 72 and a septum 40 of the body 20. *Id.* at [0099]. Turner's assembly also includes a needle guard 80 to prevent inadvertent needle sticks. *Id.* at [0008], [0066]. Turner's assembly is shown, for example, in Figure 3:

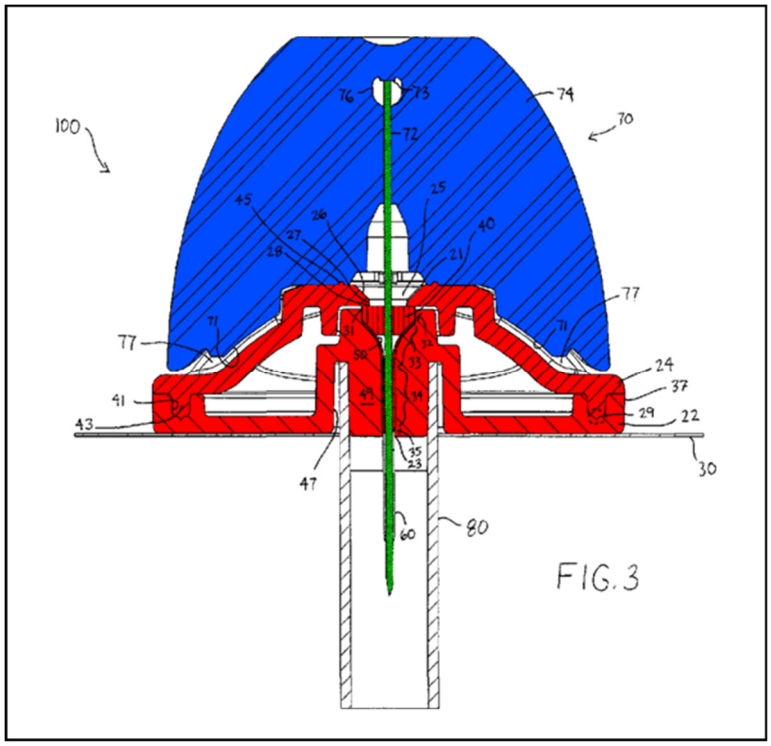

Id. at Fig. 3.

Turner also teaches that its hub 74 optionally "may be configured" to include protrusions 71 that extend vertically downward into corresponding vertical recesses 77 in the upper surface of the body 20. *Id.* at [0069] (protrusions "extend in a downstream or downward direction from the main portion of insertion device hub 74"). Such recesses corresponding to the hub's protrusions are located in the upper

surface of Turner's body 20—and not on its periphery—at least because (a) the periphery of the body extends beyond the width of the hub (*see, e.g.*, Figure 3 above) and (b) the hub's protrusions extend vertically downward from an interior part of the hub. One of Turner's vertically-extending protrusions can be seen in Figure 2B (purple below) while the upper-surface recesses can be seen, for example, in Figure 5G (orange below):

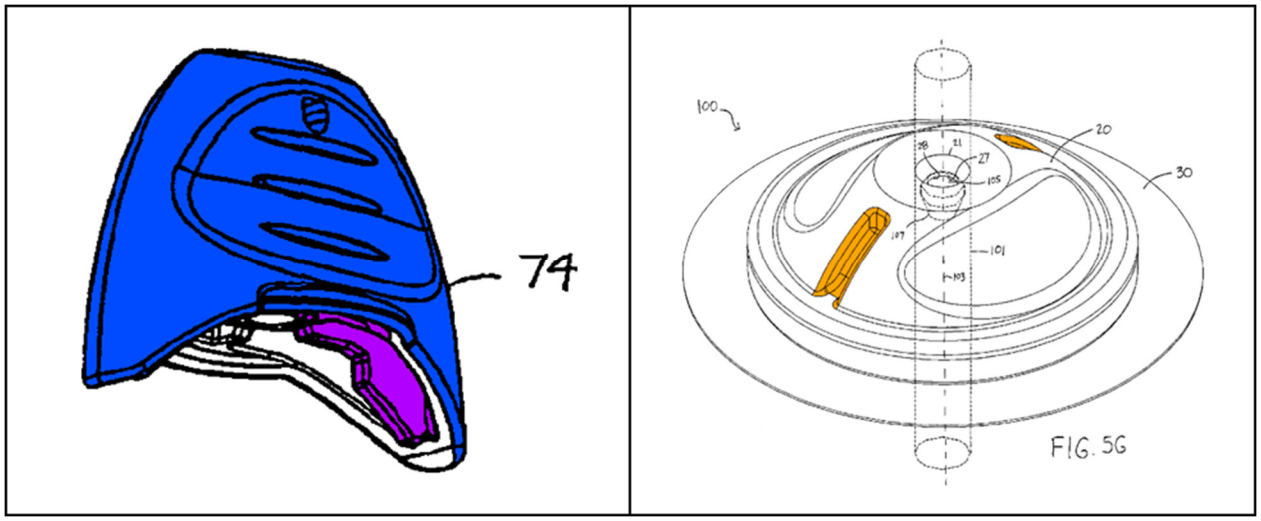

Id. at Figs. 2B (excerpt), 5G. Turner's protrusions and recesses do not serve to secure the body 20 to the hub 74 (indeed, they are an optional feature).[6] Rather, if used, their stated purpose is to prevent rotation of the needle hub 74 relative to the body

[6] Without the needle 72 of the needle hub 74 being secured in the septum 40 of the body 20, the body 20 would just fall away from the hub 74.

20. *Id*. at [0069]. In fact, Turner specifically refers to them as the "rotation-restricting protrusions" and "rotation-restricting recesses." *Id.*

In use, the user removes Turner's needle guard and then simply applies the remaining assembly to the body (thus inserting the needle and cannula). *See, e.g.*, *id.* at [0099]. The user then removes the needle hub, thus removing the needle along with it. *See, e.g.*, *id.* at [0078] ("Insertion device 70 [*i.e.*, the needle hub and needle] has been removed" as shown in Figure 5A). Turner does not disclose a separate inserter that (a) holds an OBU in a proximal position within it, (b) advances the OBU, along with the needle hub and needle, from a proximal position to a distal position, and (c) ultimately releases the OBU, leaving it on the body.

4. Say (Ex. 1012), Bickoff (Ex. 1013), and Shah (Ex. 1014)

Petitioner's other references—Say, Bickoff, and Shah—are used as third or fourth references in Grounds 3-8, which are directed to dependent claims 16-18. None of these references teaches, and the Petition does not allege that any of them teaches, a plurality of spaced-apart recesses disposed on the periphery of an OBU housing that detachably engage with an inserter.

IV. LEVEL OF ORDINARY SKILL IN THE ART

Petitioner contends that a POSITA "would have had a bachelor's degree in bioengineering, mechanical engineering, electrical engineering, or a related subject, and one or more years of experience researching, developing, and/or designing

insertable medical devices, including, *e.g.*, systems for implanting wearable medical devices such as cannulas, infusion sets, and analyte sensors, or equivalent experience." Pet. at 8. "Less work experience would have been compensated by a higher level of education, such as a master's degree, and vice versa." *Id*.

Because institution should be denied even with this POSITA definition, for the purpose of this Preliminary Response only, Patent Owner does not dispute Petitioner's POSITA definition.

V. CLAIM CONSTRUCTION

Based on the current record, Patent Owner does not believe that any claim terms require construction in order to reach a decision to deny institution. Patent Owner reserves the right, however, to address the construction of any terms in this or any other proceeding involving the 335 Patent.

VI. PETITIONER HAS NOT MET ITS BURDEN OF PROVING A REASONABLE LIKELIHOOD THAT THE CHALLENGED CLAIMS ARE UNPATENTABLE

The Petition presents no basis to institute *inter partes* review. As explained in the Introduction and further below, the Petition fails to show a "reasonable likelihood" that the Challenged Claims would have been obvious under any of the presented Grounds. 35 U.S.C. § 314(a). Once the arguments in the Grounds are unpacked and scrutinized, it becomes clear that Petitioner's obviousness arguments are based entirely on inaccurate characterizations of the cited art, inaccurate

characterizations of Patent Owner statements, and hindsight reasoning. Fundamentally, none of the Grounds meets the "plurality of peripheral OBU housing recesses" limitation required by all Challenged Claims.[7]

Ground 1 is Stafford + Raymond. Petitioner concedes that Stafford does not disclose the claimed OBU housing recesses. Instead, Petitioner repeatedly alleges that Raymond discloses them. ***But Raymond does not***. Raymond's alleged OBU (base 122) has a single annular rim, not a plurality of spaced-apart peripheral OBU housing recesses. To create the erroneous impression that Raymond discloses such recesses, Petitioner repeatedly relies on an incorrectly annotated cross-sectional view of Raymond's device. But Petitioner's labeled "recesses" are not recesses at all, which would be immediately recognized by even the most junior draftspersons. Petitioner cannot manufacture OBU housing recesses that simply do not exist in Raymond.

Tacitly acknowledging that Raymond does not teach the claimed OBU housing recesses, Petitioner argues that such recesses would nevertheless be obvious based on certain "background" references, including Turner. Petitioner also relies on Turner expressly in Ground 2. But resorting to these references assumes there is

[7] The Petition fails for many other reasons, but as stated earlier, it is not necessary to step through all of them for purposes of denying institution.

a legitimate reason to add the claimed OBU housing recesses to Stafford + Raymond in the first place. There is not.

Setting that fundamental flaw aside, Petitioner's extra references do not fill in the missing "plurality of peripheral OBU housing recesses" limitation. Indeed, contrary to Petitioner's representations, four of the five "background" references cited by Petitioner ***do not disclose any OBU recesses at all*** (let alone a plurality). And while Petitioner's last resort (Turner) discloses optional rotation-restricting recesses, they are not on the OBU periphery and are not used for securing Turner's OBU within an inserter (or for securing Turner's OBU to anything at all). The only way Petitioner can try to reach the Challenged Claims is by ignoring the location, orientation, and purpose of Turner's recesses. That is not proper and is based on hindsight.

Notably, this is not the first time Petitioner has made these inaccurate arguments based on Raymond, Turner, and the other "background" references. As previously shown in the Introduction and discussed further below, the EPO's Opposition Division rejected Petitioner's same mischaracterizations of that same art.

Finally, Petitioner raises a few other miscellaneous arguments, none of which support institution. If anything, they reinforce the opposite conclusion. And as for Grounds 3-8, they are directed only to claims that depend from independent claim

1, and therefore fail to provide a basis upon which trial should be instituted for the same reasons as Grounds 1 and 2.

These points are addressed in further detail below.

A. Legal Standard

Obviousness is a question of law based on underlying findings of fact as outlined in *Graham v. John Deere Co.*, 383 U.S. 1, 17-18 (1966). *In re Kubin*, 561 F.3d 1351, 1355 (Fed. Cir. 2009). To invalidate a claim for obviousness based on multiple references, the prior art must disclose all of the limitations of the claim. *See, e.g.*, *Broadcom*, IPR2017-00831, Paper 8 at 2 (denying institution "because the Petition does not account properly for all the limitations of independent claims 1 and 9"); *IPDATATEL, LLC v. ICN Acquisition, LLC*, IPR2018-01819, Paper 19 at 14, 17-18, 20 (P.T.A.B. Apr. 17, 2019) (denying institution because "the proposed prior-art combination[s] [are] missing a claim limitation"); *Vizio, Inc. v. ITC*, 605 F.3d 1330, 1342-43 (Fed. Cir. 2010); *CFMT, Inc. v. YieldUp Int'l Corp.*, 349 F.3d 1333, 1342 (Fed. Cir. 2003).

Even if all the elements of an invention are found in a combination of prior art references, Petitioner has the "burden to demonstrate … that a skilled artisan would have been motivated to combine the teachings of the prior art references to achieve the claimed invention," *In re Magnum Oil Tools Int'l*, 829 F.3d 1364, 1381 (Fed. Cir. 2016), and must "articulate[] reasoning with some rational underpinning

to support the legal conclusion of obviousness." *KSR Int'l v. Teleflex Inc.*, 550 U.S. 398, 418 (2007). The requirement of a reason to combine is a safeguard against "an impermissible 'hindsight reconstruction,' using 'the patent in suit as a guide through the maze of prior art references, combining the right references in the right way so as to achieve the result of the claims in suit.'" *Intel Corp. v. Qualcomm Inc.*, IPR2018-01429, Paper 43 at 51-52 (P.T.A.B. Jan. 30, 2020) (quoting *In re NTP, Inc.*, 654 F.3d 1279, 1299 (Fed. Cir. 2011)).

The "factual inquiry" into the reasons for "combin[ing] references must be thorough and searching, and the need for specificity pervades." *In re Nuvasive, Inc.*, 842 F.3d 1376, 1381-82 (Fed. Cir. 2016). "It is impermissible within the framework of section 103 to pick and choose from any one reference only so much of it as will support a given position, to the exclusion of other parts necessary to the full appreciation of what such reference fairly suggests to one of ordinary skill in the art." *In re Hedges*, 783 F.2d 1038, 1041 (Fed. Cir. 1986) (quoting *In re Wesslau*, 353 F.2d 238, 241 (CCPA 1965)).

B. Ground 1: The Combination of Stafford and Raymond Does Not Render Claim 1 Obvious

Petitioner fails to show that the Challenged Claims would have been obvious over Stafford + Raymond. Claim 1 recites "an on body electronics unit housing comprising a plurality of recesses disposed on a periphery of the on body electronics unit housing, wherein the plurality of recesses comprises a first recess in a spaced

relation to a second recess, and wherein the plurality of recesses is detachably engaged with the inserter."[8] Ex. 1001 at claim 1. Petitioner takes the position that Stafford discloses an OBU housing, but concedes that Stafford's housing lacks the claimed plurality of spaced-apart peripheral OBU housing recesses. Pet. at 19-20, 25, 28-34. Petitioner, however, argues that Raymond's alleged OBU (infusion device base 122) discloses such recesses and that a POSITA "would have implemented Stafford+Raymond with an on body unit housing containing electronics, as taught by Stafford, and having recesses to engage each of the feet on the two base-retaining arms, as taught by Raymond." *Id*. at 31. Petitioner's argument is not only plainly wrong, but is also misleading, and should be rejected.

1. Raymond Does Not Disclose A Plurality of Recesses

Critically, even assuming (incorrectly) that a POSITA would combine Stafford's standalone glucose sensor assembly with Raymond's infusion device inserter, Raymond's OBU simply does not have the claimed plurality of recesses (or any recesses at all). Here is Raymond's alleged OBU:

[8] Challenged Claims 2-4, 8-9, 11-15, and 17-27 depend from claim 1.

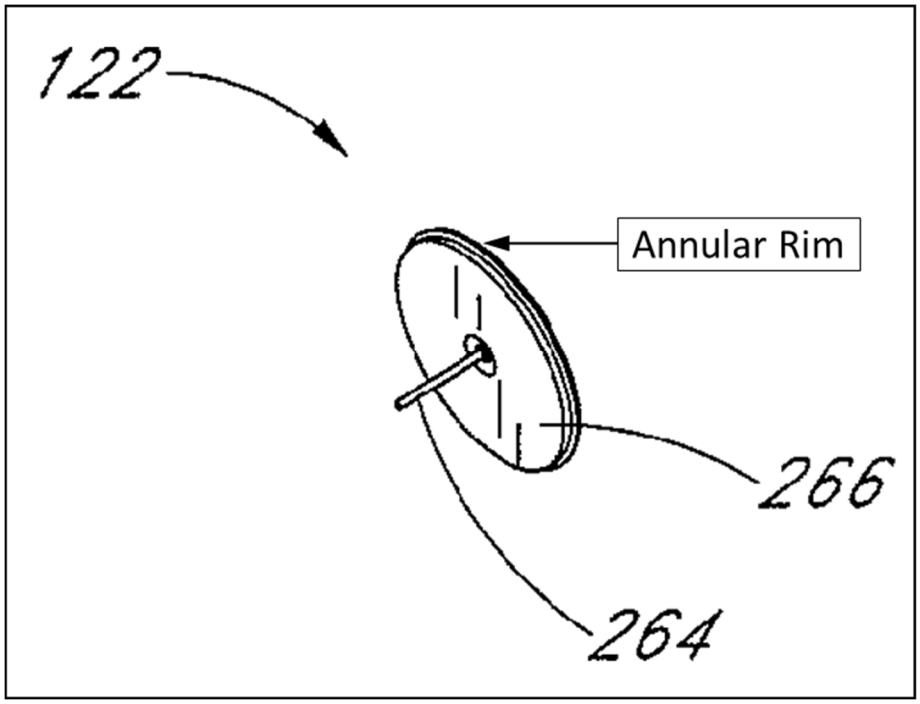

Ex. 1010 at Fig. 18 (excerpt). There is no plurality of spaced-apart recesses. It only has a single annular rim. That alone should be dispositive of Petitioner's Stafford + Raymond Grounds.[9]

Faced with this fatal flaw, Petitioner resorts to mischaracterizing Raymond (and does so repeatedly). In fact, Petitioner asserts at least thirteen times that Raymond's OBU has the claimed plurality of spaced-part recesses. *See, e.g.*, Pet. at

[9] Nothing in this Preliminary Response should be construed as concession by Patent Owner that Raymond's base 122 is or includes an OBU "housing." The Challenged Claims require that the OBU "housing" includes the plurality of spaced-apart recesses on its periphery.

2, 17, 18, 20, 23, 24, 28-29, 33, 41-42, 42, 42-43, 47, 48. To prop up this erroneous assertion, Petitioner repeatedly utilizes cross-sectional figures from Raymond—like the one below—to create the erroneous impression that Raymond's OBU actually has a plurality of spaced-apart recesses:

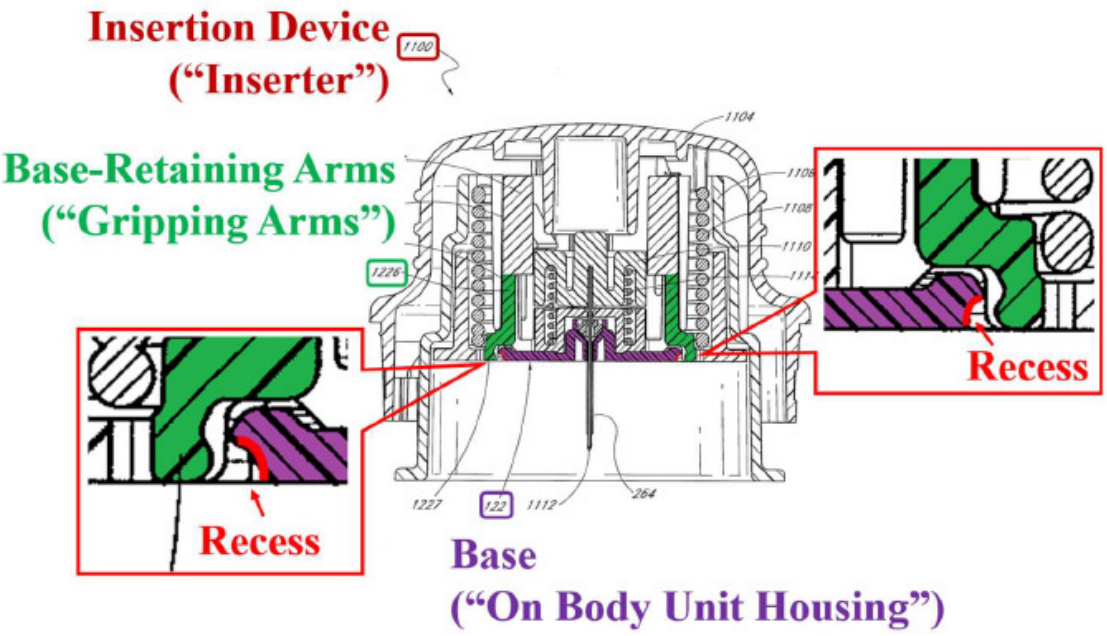

Raymond, FIG. 29 (annotated)

Pet. at 28-29 (annotations and color by Petitioner and wrongly asserting that Figure 29 shows multiple "recesses (red) disposed on opposite sides of the [OBU]"); *see also id.* at 2, 17, 18, 42, 43, 47 (depicting Raymond cross-sectional figures with inaccurate "recess" annotations). But what Petitioner labels as a plurality of spaced-apart recesses ***truly are not recesses at all***—these figures simply illustrate a cross-sectional view of Raymond's OBU annular rim.

Tacitly acknowledging its mischaracterization, Petitioner argues that despite what Figure 18 shows, "that cannot change the FIGS. 29-30 depiction of plural recesses." *Id.* at 30. Petitioner thus doubles down on its credibility. Again, Figures 29-30 of Raymond do not show a plurality of recesses. They are simply side cross-sectional views. Raymond's OBU has only a single annular rim, which is clearly seen in the perspective view of Figure 18. A POSITA, and generally anyone familiar with different views of an object, viewing Figures 18, 29, and 30 of Raymond together would understand that Raymond does not disclose a plurality of spaced-apart recesses on the periphery of its OBU.

As noted in the Introduction, it is particularly surprising that Petitioner would again make this inaccurate argument about Raymond given that it already has been rejected by other, objective tribunals. Specifically, Petitioner has filed an opposition in the EPO against a patent related to the 335 Patent (*i.e.*, EP 3 766 408 B1). Similar to the 335 Patent, the claims in that related EP patent recite, *inter alia*, an OBU housing "comprising [a] plurality of recesses circumferentially disposed thereon, wherein the plurality of recesses comprise a first recess in a spaced relation to a second recess." Ex. 2002 at claim 1. In that opposition, like here, Petitioner alleged that Raymond discloses a plurality of spaced-apart OBU housing recesses. The Opposition Division of the EPO rejected that mischaracterization of Raymond in its preliminary opinion:

> D10 [Raymond] does not appear to disclose any on-body electronics. Contrary to Opponent 1's [*i.e.*, Petitioner's] position, however, ***it also seems not to disclose recesses on an on-body unit housing***. Opponent 1 refers to fig. 26 and 29 as showing recesses; however, feet 1227 of arms 1226 ***do not appear to engage base 122 at a plurality of recesses***. Paragraph [0123] merely discloses that the feet clamp, grasp or otherwise engage the base, and ***the base is not shown to have recesses*** (see also fig. 18). Rather, it appears that the feet grasp ***a rim on the base***.
>
> ***
>
> For the above reasons, claim 1 as granted appears to involve an inventive step.

Ex. 2001 at ¶¶21.2, 21.5.

In sum, neither Stafford nor Raymond discloses the "plurality of peripheral OBU housing recesses" limitation of claim 1, and, for this reason, Ground 1 fails.

2. It Would Not Have Been Obvious To Add The Claimed Plurality Of Recesses To Stafford + Raymond

Knowing that Raymond lacks the claimed plurality of peripheral OBU housing recesses, Petitioner alternatively argues that it would have been obvious to add them to Stafford + Raymond (even though neither reference discloses them). Pet. at 29-34. Petitioner's arguments are meritless, factually inaccurate, misleading, and based on hindsight.

First, Petitioner argues that a POSITA "would have been motivated ... to provide recesses on the on body electronics unit housing in order to securely engage the on body electronics unit to the inserter." *Id.* at 30. But this argument makes no sense. As Petitioner and its expert admit, Raymond's existing design—without the recesses—already secures the OBU within the inserter:

> [Raymond's] shuttle includes plural base-retaining arms extending therefrom, each of which includes a base-retaining foot at a tip portion thereof ***for securing the infusion device within the insertion device***.

Id. at 16; *see also* Ex. 1003 ¶41 (same), ¶72 ("Raymond teaches arms with inward protrusions, called 'base-retaining feet,' that 'engage the base' of the [alleged] on-body unit 'and secure it' to the insertion device."); Ex. 1010 at [0123]. Petitioner cites nothing that indicates or even suggests that Raymond's "securing" is inadequate or deficient. There is simply no legitimate reason to make Raymond's complex assembly even more complex by adding a feature that is already provided for in Raymond. *See, e.g.*, *Schweickert*, 676 F.App'x at 995 (reversing Board's obviousness determination where proposed modification of prior art is "unnecessary" because prior art "already" performs function of proposed additional feature and "would do little more than add unwanted cost and complexity to the system"); *Sony Corp. v. Fujifilm Corp.*, IPR2018-01751, Paper 14 at 11 (P.T.A.B. Apr. 12, 2019) ("Petitioner does not explain adequately why modifying Ejiri in view of the teachings of Hokkyo and Chen would have been an improvement on what

Ejiri already provides, or why Ejiri is deficient in any respect, such that a POSITA would have looked to references like Hokkyo and Chen.... Ejiri already addresses the problem of improving performance properties of magnetic recording media.... [I]t is not evident why Ejiri's magnetic recording medium would have benefitted from modifications based on Hokkyo and Chen.").

For example, it is evident that adding spaced-apart recesses on the periphery of the OBU housing would make Raymond's inserter more complex and assembly more difficult. With Raymond's existing annular rim design, the arms of Raymond do not need to be aligned in any specific way with the OBU in order to grasp it because it includes only a single annular rim. But adding spaced-apart, dimensionally-appropriate recesses to the periphery of the OBU housing would require a more complex design and careful alignment of the arms with the recesses when the OBU is loaded into the inserter.

Second, while acknowledging that "the text of Raymond does not describe these recesses in narrative," Petitioner contends that "based on the figures of Raymond a POSITA would have at least found it obvious to implement an on-body unit with recesses to engage the feet/protrusions of the retaining arms." Pet. at 29. But the opposite is true. A POSITA looking at Raymond would be motivated to use an annular rim—as actually taught by Raymond—not undisclosed spaced-apart peripheral recesses.

Petitioner attempts to support its argument by quoting statements from *In re Aslanian*, 590 F.2d 911, 914 (CCPA 1979), that a patent drawing "can be cited against … [a] patent application even though the feature shown in the drawing was unintended or unexplained in the specification" and that a reference's teachings are evaluated "on the basis of what they reasonably disclose and suggest." Pet. at 29. The disclosure of Figure 29 of Raymond, however, is not "unintended" or "unexplained"—it is a cross-sectional view that, when considered with the perspective view of Figure 18, does not "reasonably disclose" a plurality of spaced-apart recesses on the periphery. Rather, in context, it plainly discloses a single annular rim.

Third, Petitioner alleges that it would have been obvious to add the claimed OBU housing recesses to Stafford + Raymond because "using plural recesses for securing transcutaneous medical devices to an inserter was known." Pet. at 11 (capitalization removed from heading), 30. As alleged proof that it was "known," Petitioner purports to cite five references—none of which are part of Ground 1—that allegedly disclose this feature. *See, e.g.*, *id.* at 11 (citing Exs. 1018, 1040, 1042, 1057, 1011), 30. Petitioner's assertion based on these references is both misleading and wrong and only serves to further refute Petitioner's positions.

As noted earlier, Petitioner's alleged five background references are in fact only two disclosures, as will be apparent upon even the most cursory of reviews of

the references. Petitioner tries to create the appearance of substantial support for its assertion by separately citing Exhibits 1018, 1040, 1042, and 1057. But the cited portions from the first three references are word-for-word identical, and the cited portion from the fourth reference is substantively identical to the first three as shown in the following table:

Ex. 1018 at [0011] Ex. 1040 at 2:45-57 Ex. 1042 at [0010]	Ex. 1057 at [0015]
"The plunger head includes a safety lock mechanism to retain the insertion set against projection from the injector barrel. In one preferred form, the safety lock mechanism comprises at least one and preferably a pair of safety lock arms for engaging and retaining the insertion set when the plunger is retracted from a fully advanced position. Each safety lock arm includes a cam lobe for engaging an appropriately shaped recess on the insertion set to prevent release thereof from the plunger head, unless and until the plunger head is returned to the fully advanced position. In such fully advanced position, the shape of the cam lobe permits quick and easy separation of the injector from the insertion set with a minimal separation force."	"The plunger head ~~includes~~ may optionally include a safety lock mechanism to retain the insertion set against projection from the ~~injector~~ inserter barrel. ~~In one preferred form~~ According to an embodiment, the safety lock mechanism comprises at least one ~~and preferably a pair of~~ safety lock ~~arms~~ arm(s) for engaging and retaining the insertion set when the plunger is retracted from a fully advanced position. Each safety lock arm ~~includes~~ may optionally include a cam lobe for engaging an appropriately shaped recess on the insertion set to prevent release thereof from the plunger head, unless and until the plunger head is returned to the fully advanced position. In such fully advanced position, the shape of the cam lobe ~~permits~~ may permit quick and easy separation of the ~~injector~~ inserter from the insertion set with a minimal separation force."

Pet at. 11 & 30 (citing Ex. 1018 at [0011], Ex. 1040 at 2:45-57, Ex. 1042 at [0010], and Ex. 1057 at [0015]); Ex. 1003 at ¶¶30, 74 (same). In other words, the disclosure Petitioner cites from four references is truly just one disclosure.

More critically, contrary to the erroneous suggestion by Petitioner, these references ***do not disclose OBU housing recesses at all*** (let alone the plurality required by the Challenged Claims). Petitioner and its expert quote these references as follows:

> "[T]he safety lock mechanism comprises ... preferably a pair of safety lock arms .... Each safety lock arm includes a cam lobe for engaging an appropriately shaped recess of the ***insertion set***"

Pet. at 11 (quoting [0011] of Ex. 1018; brackets and ellipses in original); *see also, e.g., id.* at 11 (equivalent quote from Ex. 1057), 30 (quoting Ex. 1018); Ex. 1003 at ¶¶30, 74 (same). Clearly, from this quote, the reader is led to believe that the recited "insertion set" is the OBU. But that is not the case. As explained previously in the Introduction: (a) the referenced "insertion set" is a combination of a needle hub/needle and an OBU housing and (b) the cited "recess" is ***not an OBU housing recess at all*** (nor is it a ***plurality*** of recesses). *See supra* §I. Indeed, the cited "recess" is not a recess ***in any component***. Rather, the singular feature that is referred to as a "recess" ("recess 101" below) truly is a space formed ***between two components*** (*i.e.*, the needle hub 18 (blue below) and the housing 20 (red below)):

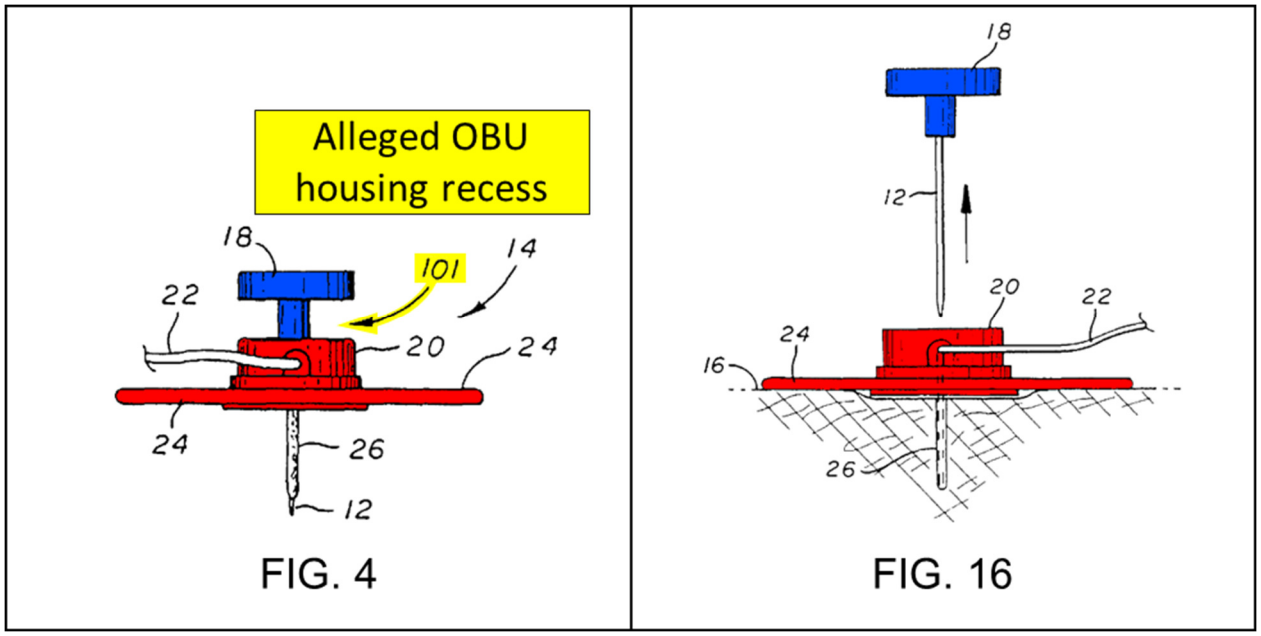

Ex. 1018 at Figs. 4 (excerpt, annotations added), 16; *see also id.* at [0119] (referring to "recess 101 defined between the hub 18 and housing 20 of the insertion set"). Because these four references do not disclose OBU housing recesses at all, they certainly cannot fill in the missing "plurality of peripheral OBU housing recesses" limitation from Stafford + Raymond (even assuming they properly can be relied upon despite not being part of Ground 1).[10]

Notably, Petitioner presented this same inaccurate characterization of the art to the EPO's Opposition Division. It was rejected for the same reasons as above:

[10] The fifth reference cited by Petitioner is Turner. Petitioner's equally meritless arguments related to Turner are addressed in §VI.C, *infra*.

> ***D1 [same as Petitioner's Ex. 1018] does not appear to disclose a plurality of recesses on an on-body unit housing***, comprising a first recess in a spaced relationship to a second recess.
>
> Opponent 1 [*i.e.*, Petitioner] refers to element 101 in fig. 7 of D1 as recesses. ***What is referred to as recess 101 in D1 is, however, merely a single spacing between hub 18 and housing 20***, compare fig. 4.

Ex. 2001 at ¶21.1.

Finally, Petitioner throws in a boilerplate "obvious design choice" argument, stating that "it would have been an obvious design choice to implement two spaced apart plural recesses on the housing—one to engage the protrusion on each of the two arms taught by Raymond." Pet. at 31. According to Petitioner, there were only "two possibilities" for a POSITA to implement such a design: either engage an annular rim or provide independent recesses, which Petitioner claims would provide "a more secure fit between the inserter and on body unit." *Id.* But again, Petitioner does not explain why a POSITA would have modified Stafford's OBU housing to include a plurality of peripheral recesses to engage the inserter feet of Raymond to provide a "more secure fit" when, as Petitioner and its expert acknowledge, Raymond already discloses that the feet secure the OBU without a plurality of spaced-apart recesses. *See Sony*, IPR2018-01751, Paper 14 at 11.

Moreover, with respect to Petitioner's "two possibilities" argument, there is no basis for limiting the way Raymond's inserter arms engage an OBU to just the

arms engaging "some type of recess." Pet. at 31; *see also* Ex. 1010 at [0123]. Indeed, Raymond itself refutes the assertion that the arms must engage "some type of recess" because its depicted arms do not engage any recess. *See also, e.g.*, Ex. 1010 at [0123] ("the base-retaining feet 1227 extend beneath a bottom edge of the base 122"). Furthermore, the arms could engage the OBU in other ways that do not involve engaging spaced-apart recesses disposed on the periphery of the OBU housing, such as pinching the OBU between the arms, aligning a slot in the arms with an un-recessed outer contour of the OBU, providing protrusions on the OBU to engage with the arms, etc. Thus, contrary to Petitioner's overly simplistic "design choice" argument fueled by hindsight, there are certainly more than just "two possibilities."

Petitioner's reliance on *Perfect Web Techs., Inc. v. InfoUSA, Inc.*, 587 F.3d 1324 (Fed. Cir. 2009) is misplaced. Pet. at 31. In that case, the parties' experts identified only three solutions to the problem that the patent-in-suit addressed and "simple logic" suggested the one recited in the patent's claims. *Perfect Web*, 587 F.3d at 1331. Here, there is no problem to solve as Raymond already discloses securing an OBU to an inserter without the use of a plurality of spaced-apart recesses. And, again, there would be far more than three ways to address that "securing" problem if such a problem actually existed.

In truth, Petitioner's "design choice" argument smacks of hindsight reconstruction and should be rejected. *See, e.g.*, *Current Lighting Solution, LLC v.*

ALSI Holdings, LLC, IPR2023-00125, Paper 12 at 19 (P.T.A.B. May 3, 2023) ("detect[ing] the unmistakable taint of hindsight reconstruction" in Petitioner's argument that "[i]t would have been an obvious design choice to use such a multi-faceted reflector in the [primary reference] if a greater focus of light was desired"); *Polaris Indus. V. Arctic Cat, Inc.*, 882 F.3d 1056, 1069 n.4 (Fed. Cir. 2018) ("The Board failed to consider that '[m]erely stating that a particular placement of an element is a design choice does not make it obvious.' … [T]he Board must explain why a [POSITA] 'would have selected these components for combination in the manner claimed.'"); *Power Integration, Inc. v. Fairchild Semiconductor Int'l, Inc.*, 711 F.3d 1348, 1368 (Fed. Cir. 2013) ("the prejudice of hindsight bias" often overlooks that the "genius of invention is often a combination of known elements which in hindsight seems preordained").

C. Turner Does Not Solve The Deficiency In Stafford + Raymond (Grounds 1 and 2)

Petitioner's last resort is Turner. Knowing that Stafford + Raymond lacks the "plurality of peripheral OBU housing recesses" limitation, Petitioner apparently looked for any reference that discloses recesses regardless of their location or purpose. For many reasons, Turner does not fill in the gap in Stafford + Raymond.

First, Petitioner's precise reliance on Turner is unclear. Petitioner purports to cite Turner as "known" background technology in Ground 1 while Petitioner also cites Turner as an affirmative reference in Ground 2. *Compare, e.g.*, Pet. at 31-32

and 35. By relying on Turner to support an obviousness argument in a Ground that ostensibly is based on just Stafford and Raymond, Petitioner runs afoul of the requirement that it identify with particularity the grounds, and evidence that supports the grounds, for each claim it challenges. *See* 35 U.S.C. § 312 ("A petition may be considered only if . . . the petition identifies . . . with particularity . . . the grounds on which the challenge to each claim is based, and the evidence that supports the grounds for the challenge to each claim . . . ."); *Invue Security Prods., Inc. v. Mobile Tech, Inc.*, PGR2019-00019, Paper 7 at 9 (P.T.A.B. May 29, 2019) ("[T]he Obviousness Challenges are not set forth with particularity because it is unclear what each challenge encompasses and what evidence Petitioner relies upon to establish unpatentability under each challenge.").

Second, even assuming (incorrectly) that a POSITA would combine Stafford's standalone glucose sensor assembly with Raymond's infusion device and Turner's fluid delivery device, the Challenged Claims still are not met at least because Turner does not disclose ***peripheral*** OBU housing recesses. Instead, Turner's recesses (orange below) extend in a vertical direction on the upper surface of Turner's alleged OBU (body 20) (closer to the center):

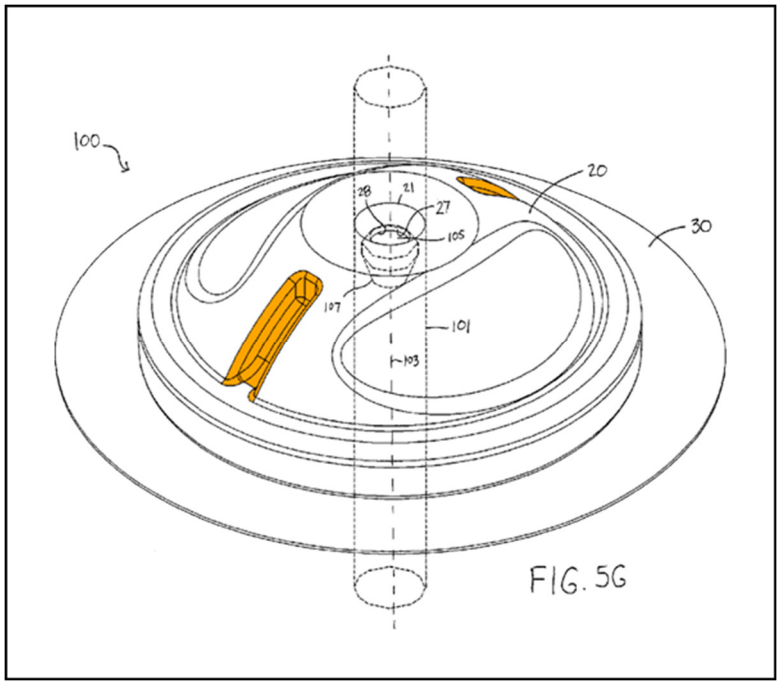

Ex. 1011 at Fig. 5G. As explained previously, Turner's OBU upper-surface recess location is not happenstance, but a necessity. For example, Turner's recesses are designed to interact with vertically-extending protrusions from Turner's needle hub 74. Because the periphery of Turner's OBU (red below) extends beyond the width of Turner's hub 74 (blue below), Turner's recesses could not be on the OBU periphery (if so, they would not be able to interact with hub 74 as required):

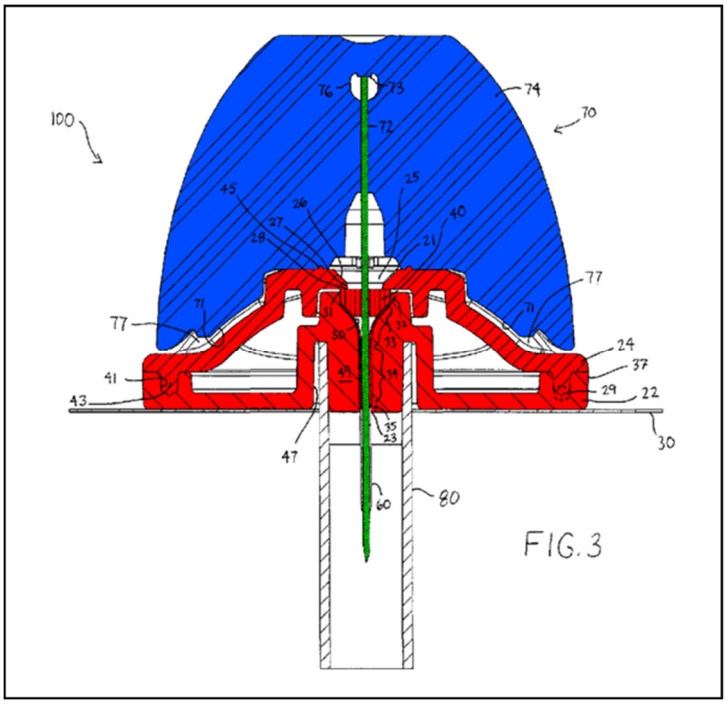

Id. at Fig. 3. Further, the protrusions of Turner's hub 74 extend vertically "in a downstream or downward direction" from an interior part of the hub as shown by the example colored in purple in Figure 2B below, thus further necessitating that Turner's recesses be on the OBU upper surface away from the periphery:

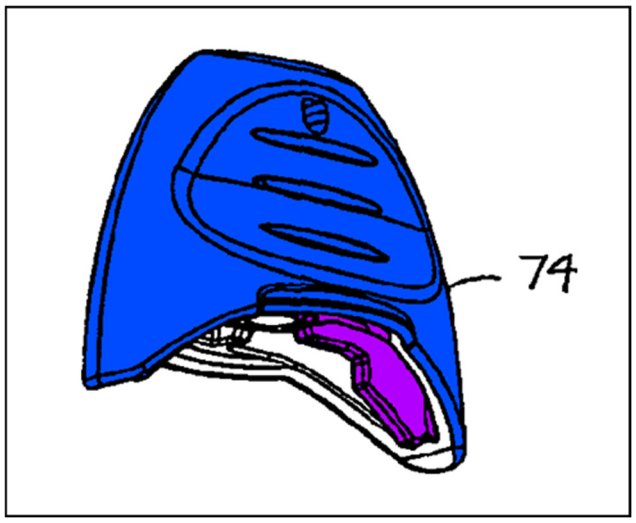

Id. at [0069], Fig. 2B (excerpt).

Third, Petitioner argues a POSITA would add Turner's OBU recesses to Stafford + Raymond (albeit conveniently changing their location to the periphery) to "secure" Stafford's data processing unit housing within Raymond's inserter. *See, e.g.*, Pet. at 11-12 (citing Turner to allegedly show that "plural recesses for securing transcutaneous medical devices to an inserter was known"), 19 ("[Turner's] protrusions and recesses are configured to secure the fluid delivery device in a particular position relative to the insertion device."), 30 (a POSITA would be motivated to use recesses such as Turner's "to securely engage the on body electronics unit to the inserter."). Petitioner's "securing" argument fails for multiple reasons.

As an initial matter, as noted above, Raymond's pre-existing inserter already secures the OBU without such recesses. Ex. 1010 at [0123]. Petitioner and its expert both admit this fact. Pet. at 16 ("[Raymond's] shuttle includes plural base-retaining arms ... ***for securing the infusion device within the insertion device***."); Ex. 1003 ¶41 (same). Thus, Petitioner's Turner-based "securing" argument fails for the same reasons as it did for Stafford + Raymond alone. *See supra* §VI.B.2 (citing case law). Other than hindsight, there is no need to add Turner's cited recesses to Stafford + Raymond for "securing" purposes, especially given that doing so would add unnecessary complexity to Raymond's already-complex assembly.

Further, Petitioner's Turner-based "securing" argument makes no sense because Turner's cited recesses are not used for securing an OBU within an inserter via detachable engagement. In fact, they are not used for securing the OBU to anything at all. Rather, Turner's cited recesses serve an entirely different purpose, *i.e.*, to prevent rotation between Turner's needle hub and OBU. *See, e.g.*, Ex. 1011 at [0069]. Turner specifically calls them "***rotation-restricting*** recesses" that interact with corresponding "***rotation-restricting*** protrusions" of needle hub 74. *Id.* Additionally, Turner teaches that its rotating-restricting recesses are optional, only further confirming that they are not responsible for "securing" the OBU. *Id*. Simply put, if a POSITA were to implement Turner's vertically-aligned protrusions and recesses in the proposed Stafford + Raymond device, the OBU would just fall out of Raymond's inserter.

Turner does teach securing its alleged OBU (body 20) to its needle hub-needle assembly, but not via the cited recesses. Rather, Turner's securing is achieved via a friction fit between the needle (coupled to the needle hub) and the septum 40 of the body 20. *Id.* at [0099] ("[I]n the depicted embodiment, the friction force between insertion device 70 [*i.e.*, the needle hub and needle] ... and septum 40 is greater than the friction force between body 20 and the needle guard 80" such that removing the needle guard will not separate the body from the needle hub/needle). Accordingly, if a POSITA truly would have looked to Turner for teachings about "securing" (as

Petitioner alleges), at most, the POSITA would have employed Turner's needle/OBU septum friction fit concept (not Turner's rotation-restricting recesses). In fact, in a different IPR petition, Petitioner and its same expert argued that a friction-fit is a common way to secure an OBU to an inserter:

> To retain the site [*i.e.*, OBU] within the opening of the cylinder hub within the inserter [of the cited reference], an elastomeric diaphragm of the site [like the septum of Turner] is positioned on the needle to frictionally engage with the needle .... [A] POSITA reading [the cited reference] would understand that once the needle passes through the diaphragm and the cannula, the frictional engagement between the needle and the diaphragm maintains the positioning of the site relative to the needle prior to and during delivery. ***This is similar to frictional engagement mechanisms used in other known inserter devices***.

IPR2023-01409, Ex. 1003 (Fletcher Decl.) at ¶¶54-56. Petitioner's proposed use of Turner's recesses for "securing" is textbook hindsight.

In the Challenged Claims, the peripheral, spaced-apart OBU housing recesses are detachably engaged with the inserter, which secures the OBU in a proximal position within the inserter (wherein the inserter thereafter advances the OBU to a distal position and disengages from the recesses to release the OBU). Turner teaches no such thing. Notably, the EPO's Opposition Division has rejected Petitioner's same attempts to misapply Turner's inapposite teachings:

> Opponent 2 [Petitioner's German-related entity] argues that D21 [Turner] discloses in fig. 2A and paragraph [0069] protrusions (71) on the insertion device (70) [*i.e.*, the needle hub coupled to the needle] that extend to engage recesses (77) in the cap element (24) of body (20). According to [Turner] however, ***the protrusions and recesses serve to prevent rotation of the insertion device (70) [needle hub with needle] relative to the body (20)***. In contrast, the gripping arms and recesses according to granted claim 1 serve to hold the on-body housing (322) in place and to maintain the proper height location of the on-body housing (322), see paragraph [0258] of the original application and granted claim 1: " ... gripping arms configured to be engaged with a corresponding recess ... <u>when the on body electronics unit is in the proximal position</u>"). ***It thus appears that the skilled person would not consult [Turner] when seeking means for holding the on-body unit housing of D14 in place***.

Ex. 2001 at ¶21.3 (underlining in original).

Fourth, Petitioner alternatively argues that a POSITA would have been motivated to add Turner's "rotation-restricting recesses on the periphery of the housing taught by Stafford to prevent rotation between the housing as taught by Stafford and the inserter as taught by Raymond." Pet. at 32; *see also id.* at 25 ("Turner confirms the obviousness of adding plural recesses to the periphery of the housing to beneficially prevent relative rotational movement between the housing and the inserter."). Petitioner's "rotation-restricting" argument likewise fails for many reasons.

As an initial matter, Petitioner's argument fundamentally fails to address the claimed inventions. As Petitioner and its expert admit, the Challenged Claims are directed to inserters that ***secure*** an OBU within the inserter:

> The features claimed in the '335 patent—namely, inserters configured to secure an on body unit therein ....

Pet. at 9; Ex. 1003 at ¶25 (same). Indeed, the claimed recesses are for "***detachably*** engag[ing] with the inserter." Ex. 1001 at claim 1. As explained above, Turner's "rotation-restricting" recesses simply do not achieve that purpose. That fact alone is fatal to Petitioner's Turner-based arguments. *See also, e.g.*, Ex. 2001 at ¶21.3 ("It thus appears that the skilled person would not consult [Turner] when seeking means for holding the on-body unit housing [of another reference] in place.").

Next, Petitioner fails to cite any reason ***why*** a POSITA would have wanted to prevent rotation between the OBU and inserter of the Stafford + Raymond combination. For example, that is not what Turner teaches. Rather, Turner teaches preventing rotation ***between its needle hub 74 (blue below) and OBU (red below)***, not between an OBU and an inserter:

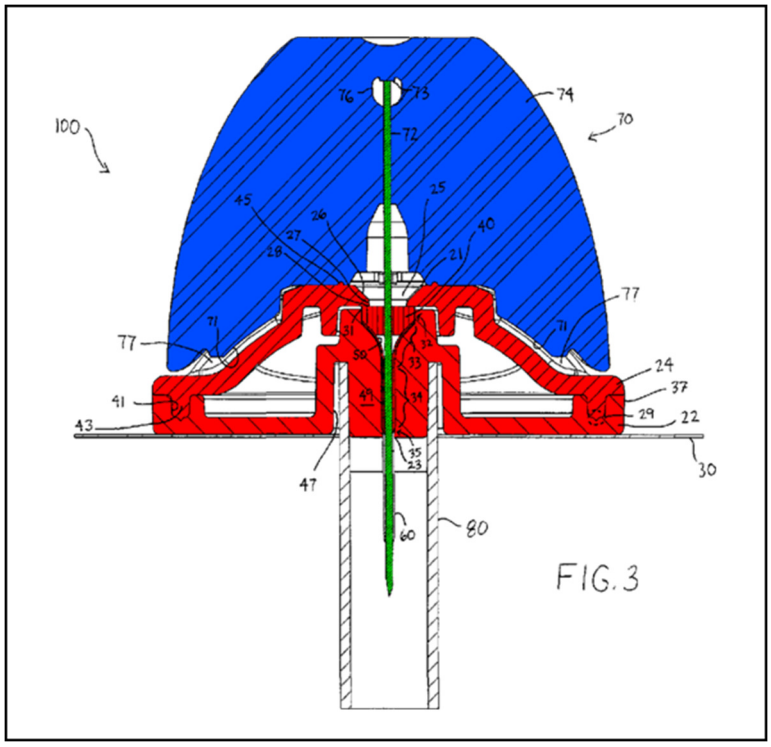

Ex. 1011 at Fig. 3. Indeed, Turner does not even teach a separate inserter that advances the OBU and needle hub; rather, the user manually applies Turner's needle hub-OBU assembly to the skin. The corresponding needle hub feature in Raymond's inserter is in blue below:

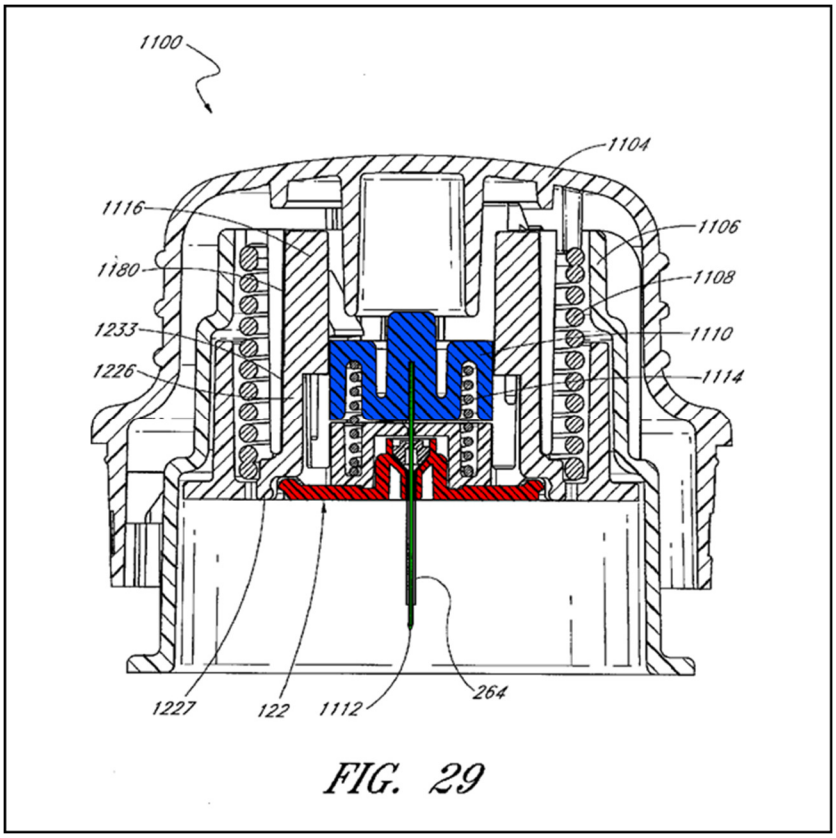

Ex. 1010 at Fig. 29. But Petitioner and its expert do not seek to use Turner's recesses to prevent rotation between the needle hub (blue above) and alleged OBU (red above) in accordance with Turner (as discussed further below). Even with respect to Turner's teachings about preventing rotation between its needle hub and OBU, Turner does not say why it is critical or beneficial. Ex. 1011 at [0069]. In fact, Turner teaches that the feature is optional. *Id.* In the end, Petitioner and its expert simply allege that preventing rotation between the OBU and inserter of Stafford + Raymond would be "beneficial[]" without any explanation. Pet. at 25. Such conclusory assertions are not enough. *See, e.g.*, *TQ Delta, LLC v. Cisco Sys., Inc.*, 942 F.3d 1352, 1359 (Fed. Cir. 2019) ("[A] conclusory assertion with no explanation is

inadequate to support a finding that there would have been a motivation to combine" because "[t]his type of finding, without more, tracks the *ex post* reasoning *KSR* warned of and fails to identify any actual reason why a skilled artisan would have combined the elements in the manner claimed.").

When considering Turner's actual teachings, Petitioner's "rotation restricting" argument does not hold up to scrutiny. Even assuming (incorrectly) that a POSITA would look to Turner for its "rotation restricting" teachings, the POSITA would seek to prevent rotation ***between the needle hub and OBU*** of Stafford + Raymond. But Petitioner does not show that Raymond's existing design does not already prevent such rotation (and thus no need for Turner). Raymond's Figure 29 suggests it may already do so, showing Raymond's needle hub (blue below) sandwiched between upper and lower portions of Raymond's shuttle 1116 (pink below):

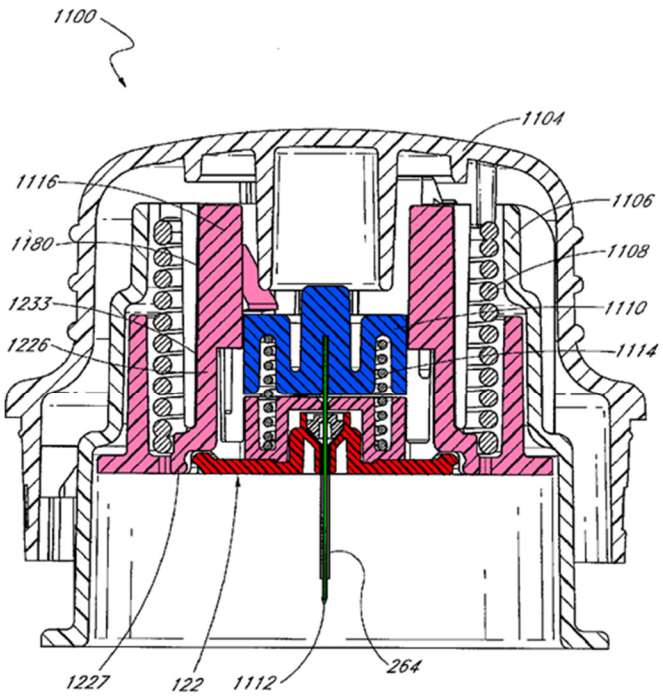

FIG. 29

Ex. 1010 at Fig. 29. To the extent Raymond does not already prevent rotation between its needle hub and OBU—and further assuming a POSITA would want to prevent such rotation—Turner still would not be of interest in the context of Raymond. That is because Turner's vertically-extending "rotation restricting" protrusions and recesses must be in adjacent components (its needle hub and OBU) to work. But Raymond's needle hub (blue) and alleged OBU (red) are not adjacent—they are separated by Raymond's shuttle (pink). This relevant design difference can be seen in the comparison of Turner and Raymond below:

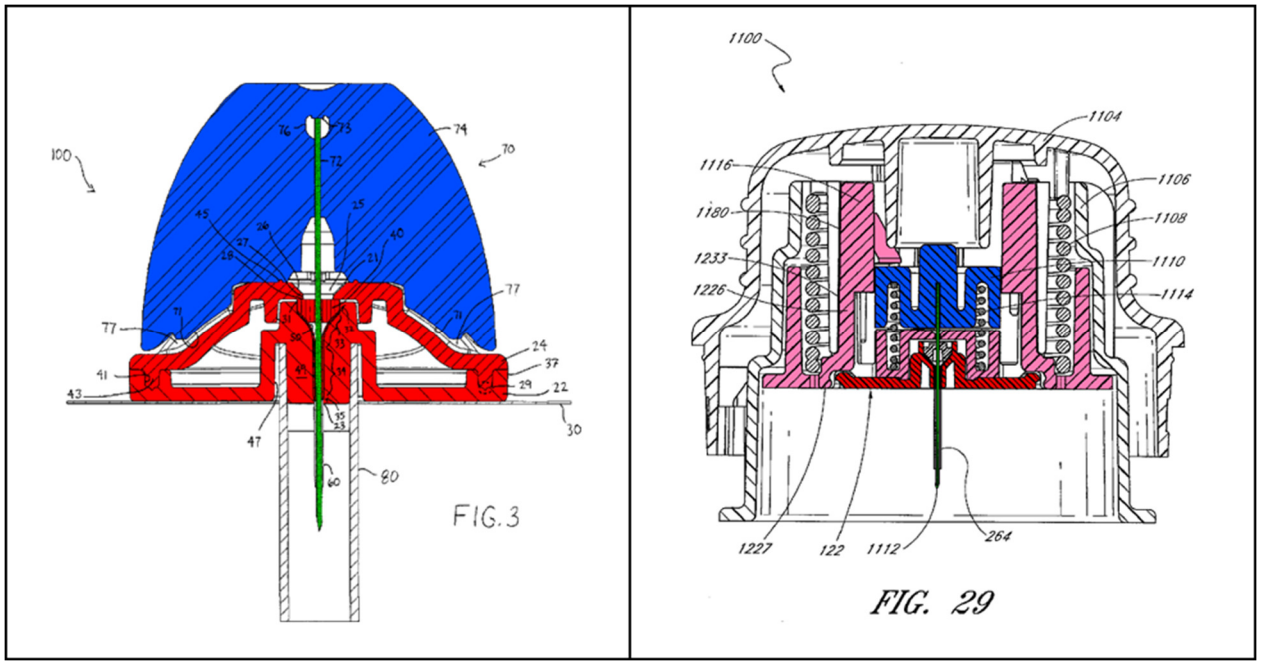

Ex. 1011 at Fig. 3; Ex. 1010 at Fig. 29. Using hindsight, Petitioner and its expert simply ignore the location, orientation, purpose, and function of Turner's recesses—and self-servingly place them on the periphery of the Stafford + Raymond OBU housing—where they would do nothing to prevent rotation between the needle hub and OBU as taught by Turner.

Lastly, in support of its "rotation restriction" argument, Petitioner passingly mentions an allegedly "similar concept" in Raymond where Raymond prevents rotation between other components (actuator 104 and sleeve 106) in a different embodiment (*see, e.g.*, Figure 1). Pet. at 30; Ex. 1003 at ¶74. To the extent relevant at all, this fact further refutes, rather than supports, Petitioner's argument. If anything, it shows that when there was a need in Raymond's designs to prevent rotation between certain components, Raymond addressed it.

Finally, Petitioner resorts to mischaracterizing arguments that Patent Owner made with respect to Turner in an unrelated German proceeding. Pet. at 32-33. While Petitioner alleges that Patent Owner made "admissions" about Turner, Petitioner provides virtually no details or context. That is because, when the proper context and details are provided, it is clear that Patent Owner's purported "admissions" in fact reinforce Patent Owner's positions herein and further refute Petitioner's Grounds.

In the German proceeding, Petitioner is asserting European Patent No. 3 928 688 B1 ("EP 688") against Patent Owner. Ex. 2003. Claim 1 of EP 688 recites "a needle hub and an on-skin sensor assembly" wherein the needle hub comprises "a base … comprising an anti-rotation feature … [and] configured to be at least partially disposed in an aperture … of the on-skin sensor assembly … wherein the anti-rotation feature is configured to prevent rotation of the base [of the needle hub] ... within the aperture [of the on-skin sensor assembly]." Ex. 2003 at 62-63. In other words, ***claim 1 of EP 688 is generally directed to preventing rotation between the needle hub and OBU (i.e., "on-skin sensor assembly") similar to Turner***. In that proceeding, Patent Owner argued that claim 1 of EP 688 was not inventive because, *inter alia*, Turner teaches preventing rotation between a needle hub and an OBU—the same as Patent Owner argues here:

> D4 [Turner] discloses a needle hub (insertion device hub 74) comprising rotation restriction protrusions 71, which engages complementary rotation-restricting recesses 73 on the body 20 [*i.e.*, the

> OBU], ***preventing rotation of the needle hub relative to the [OBU]***, ... As a result, the anti-rotation feature disclosed in [claim 1 of EP 688] does not involve an inventive step as the skilled person would transfer the protrusions for preventing rotation of the hub 74 disclosed in [Turner] to a CGM device.

Ex. 1065 at 65-67. Thus, Patent Owner's alleged "admissions" in Germany actually reinforce and are consistent with Patent Owner's Turner-related positions here.

Contrary to Petitioner's contention, Patent Owner did not argue that a POSITA would have been motivated to generically add recesses to a CGM device (let alone on the periphery of an OBU housing for detachable engagement with an inserter).

D. Grounds 3-8 Fail for the Same Reasons As Grounds 1 and 2

Grounds 3-8 are directed to dependent claims 16-18 and are based on either (a) the Ground 1 combination of Stafford + Raymond or (b) the Ground 2 combination of Stafford + Raymond + Turner. For the same reasons Petitioner is not likely to succeed in proving that claim 1 is unpatentable in Grounds 1 and 2, Petitioner is not likely to succeed in proving that claims 16-18 are unpatentable in Grounds 3-8.

VII. CONCLUSION

For at least the foregoing reasons, the Board should deny institution.

Date: January 18, 2024

Respectfully submitted,

/Peter J. McAndrews/

Peter J. McAndrews
Registration No. 38,547
McANDREWS, HELD & MALLOY
500 West Madison St., Suite 3400
Chicago, IL 60661
Telephone: (312) 775-8000

CERTIFICATE OF SERVICE

I hereby certify that the Patent Owner's Preliminary Response to Petition for *Inter Partes* Review Pursuant to 37 C.F.R. § 42.107 in connection with *Inter Partes* Review Case IPR2023-01396 was served on this 18th day of January, 2024 by electronic mail to the following:

Lead Counsel	Back-Up Counsel
Andrew M. Mason andrew.mason@klarquist.com	Alexa M. Johnston alexa.johnston@klarquist.com Michael J. Loy michael.loy@klarquist.com Todd M. Siegel todd.siegel@klarquist.com Derrick W. Toddy derrick.toddy@klarquist.com John D. Vandenberg john.vandenberg@klarquist.com
KLARQUIST SPARKMAN, LLP 121 SW Salmon Street, Suite 1600 Portland, Oregon, 97204 503-595-5300 (phone) 503-595-5301 (fax)	

Dated: January 18, 2024

/Peter J. McAndrews/
Peter J. McAndrews, Reg. No. 38,547

CUSTOMER NUMBER: 23446

CERTIFICATE OF WORD COUNT

Pursuant to 37 C.F.R. § 42.24(d), the undersigned attorney for the Patent Owner declares that this Patent Owner Preliminary Response has a total of 12,210 words, according to Microsoft Word® word count tool, excluding the parts of the Response exempted by 37 C.F.R. § 42.24(a)(1).

Dated: January 18, 2024

/Peter J. McAndrews/

Peter J. McAndrews
Registration No. 38,547
McANDREWS, HELD & MALLOY
500 West Madison St., Suite 3400
Chicago, IL 60661
Telephone: (312) 775-8000