US 20090124979A1

(19) United States

(12) Patent Application Publication

Raymond et al.

(10) Pub. No.: US 2009/0124979 A1

(43) Pub. Date: May 14, 2009

(54) **INSERTION DEVICES FOR INFUSION DEVICES**

(75) Inventors: **Randy Stephen Raymond**, Eagle Mountain, UT (US); **Joseph K. Walker**, Pleasant Grove, UT (US); **Dan Lopez**, Vernal, UT (US); **Dee E. Warren**, Draper, UT (US)

Correspondence Address:
KNOBBE MARTENS OLSON & BEAR LLP
2040 MAIN STREET, FOURTEENTH FLOOR
IRVINE, CA 92614 (US)

(73) Assignee: **ICU Medical, Inc**, San Clemente, CA (US)

(21) Appl. No.: **12/208,313**

(22) Filed: **Sep. 10, 2008**

Related U.S. Application Data

(60) Provisional application No. 60/973,134, filed on Sep. 17, 2007, provisional application No. 61/042,232, filed on Apr. 3, 2008.

Publication Classification

(51) **Int. Cl.**
A61M 5/32 (2006.01)

(52) **U.S. Cl.** **604/195**

(57) **ABSTRACT**

An insertion device for inserting an infusion device at least partially into skin for subcutaneous infusion can comprise a sleeve having a lower surface that is configured to engage the skin, a shuttle or carriage to carry the infusion device between a retracted position and an advanced position; at least a first biasing member to urge the shuttle or carriage toward the advanced position, and an actuator to cause the first biasing member to urge the carriage from the retracted position to the advanced position. In some embodiments, the insertion device can further comprise a hub and at least a second biasing member to urge the hub away from the shuttle or carriage. In some embodiments, the insertion device can further comprise a needle attached to the hub. Methods for inserting an infusion device and various other features that can be comprised by an insertion device are also disclosed.

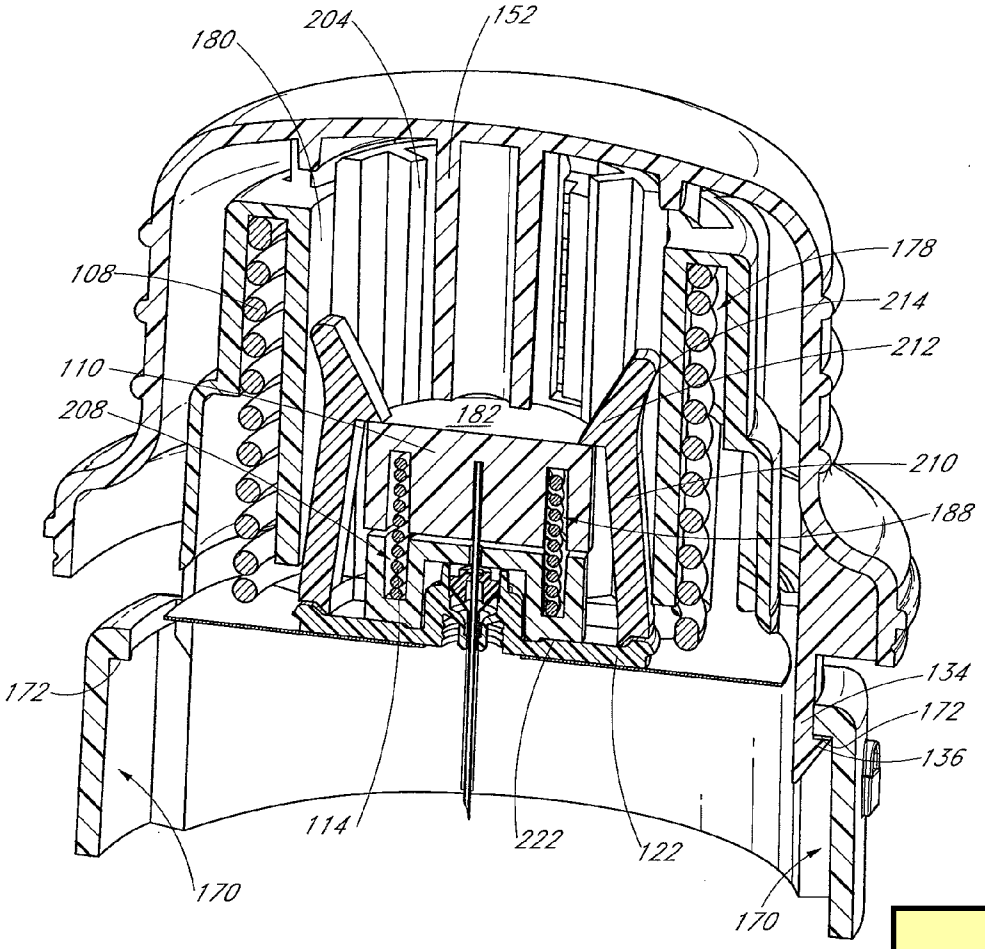

DEXCOM
EXHIBIT 1110

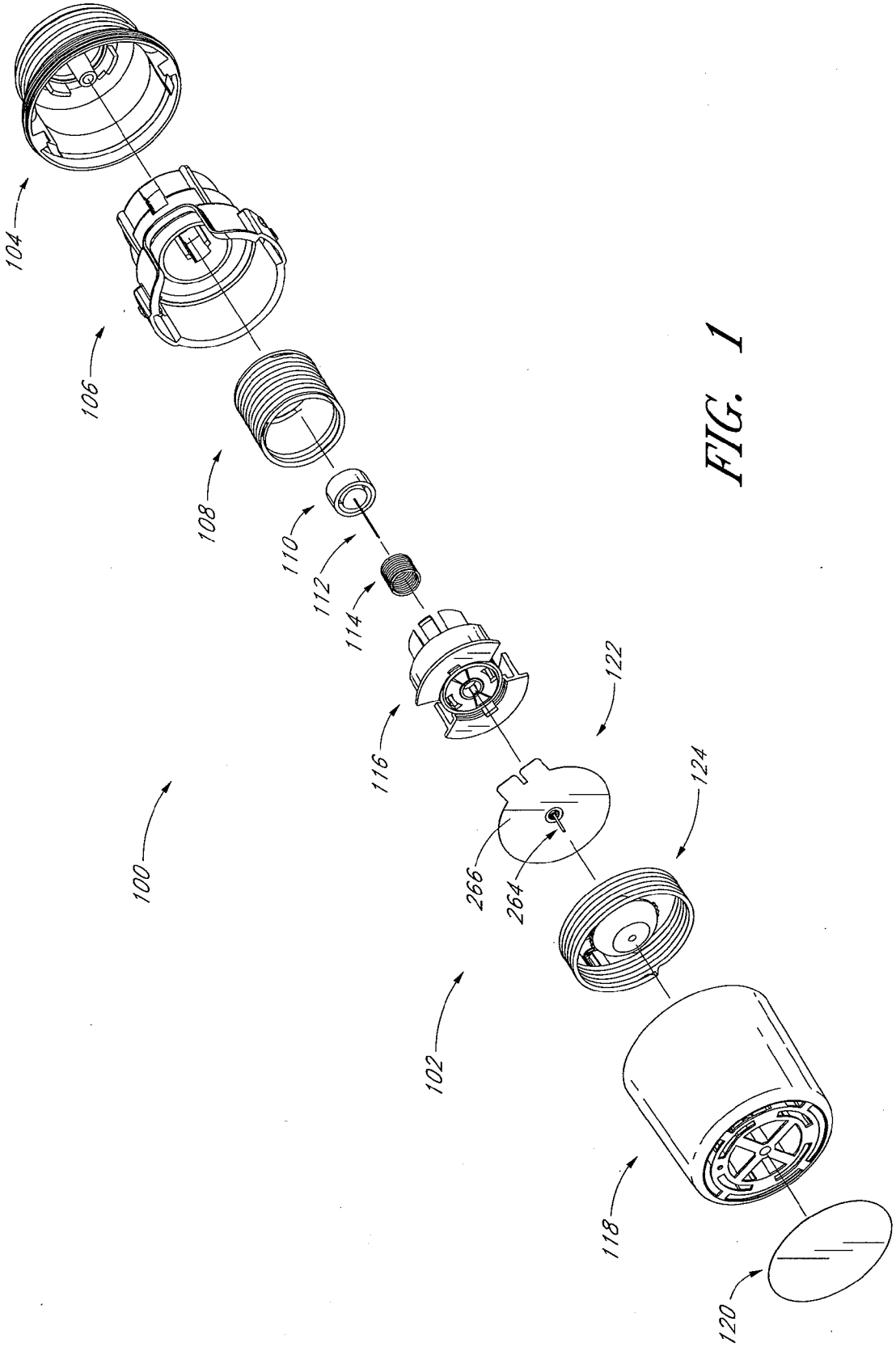

FIG. 1

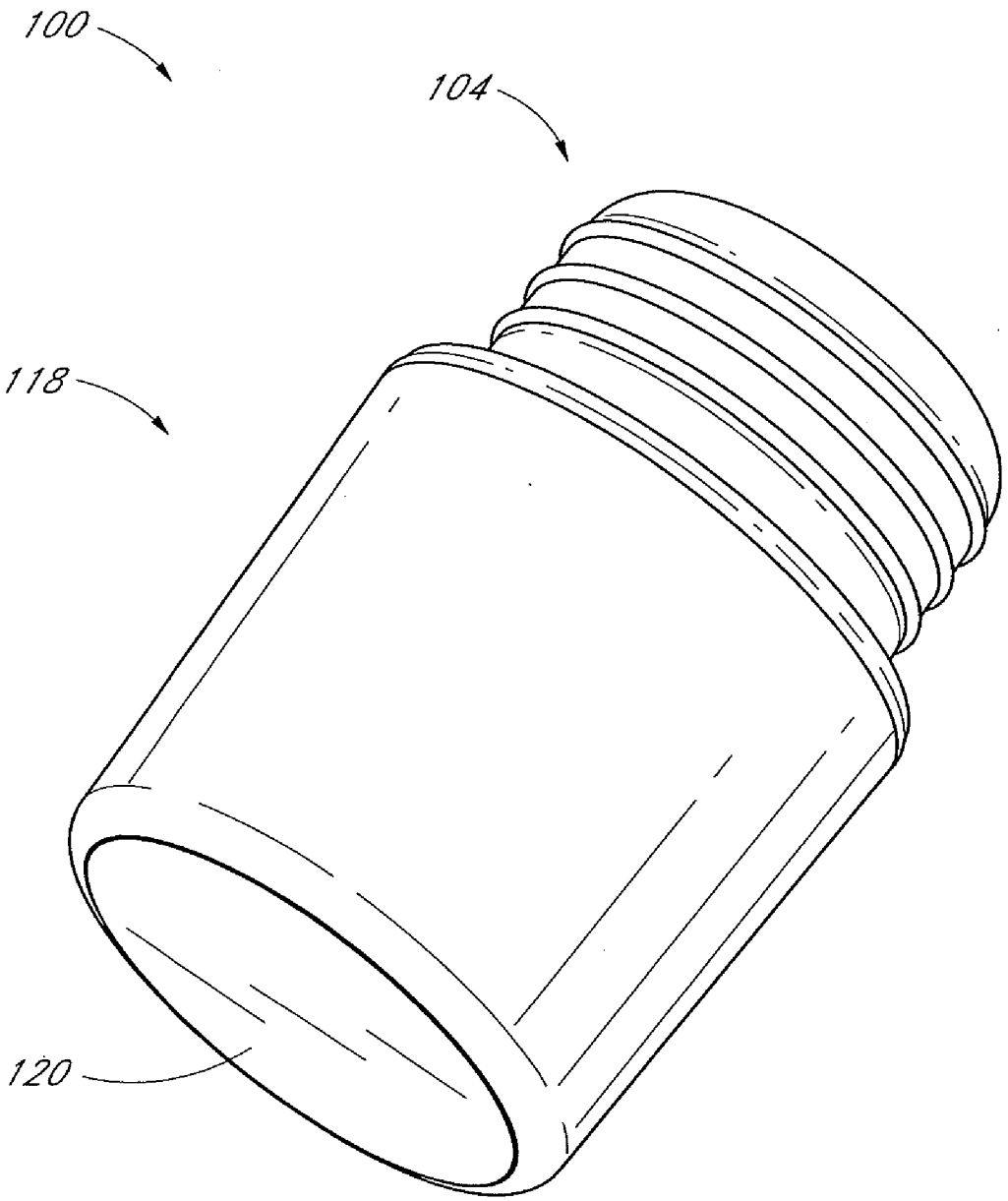

FIG. 2

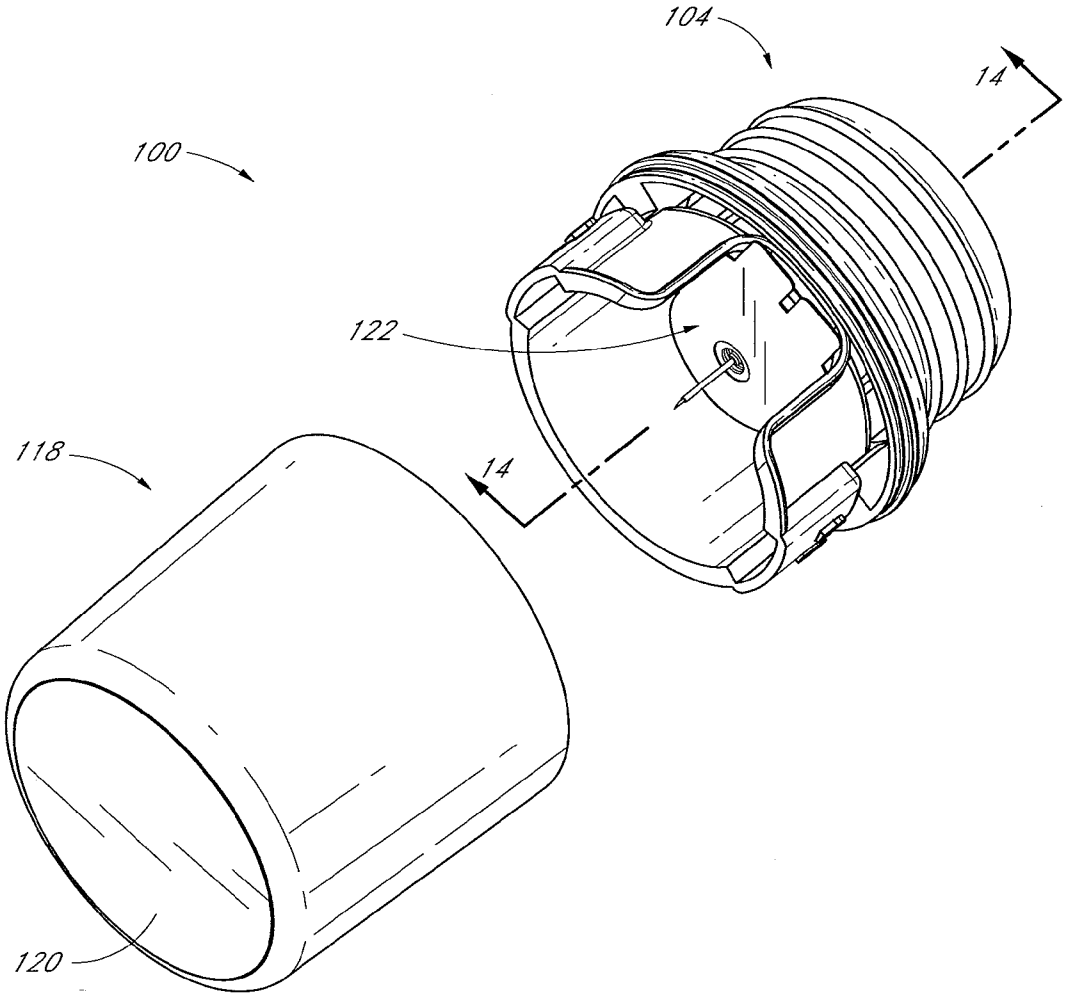

FIG. 3

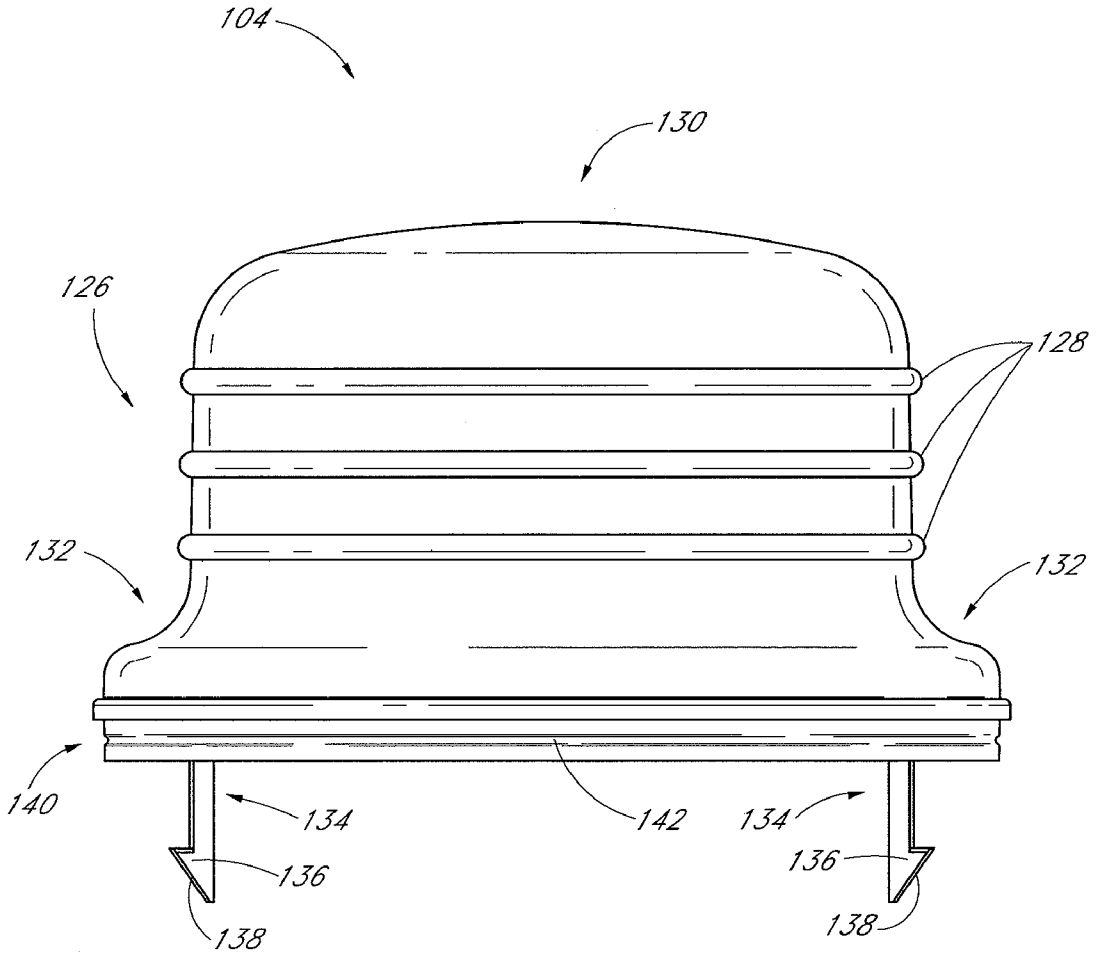

FIG. 4

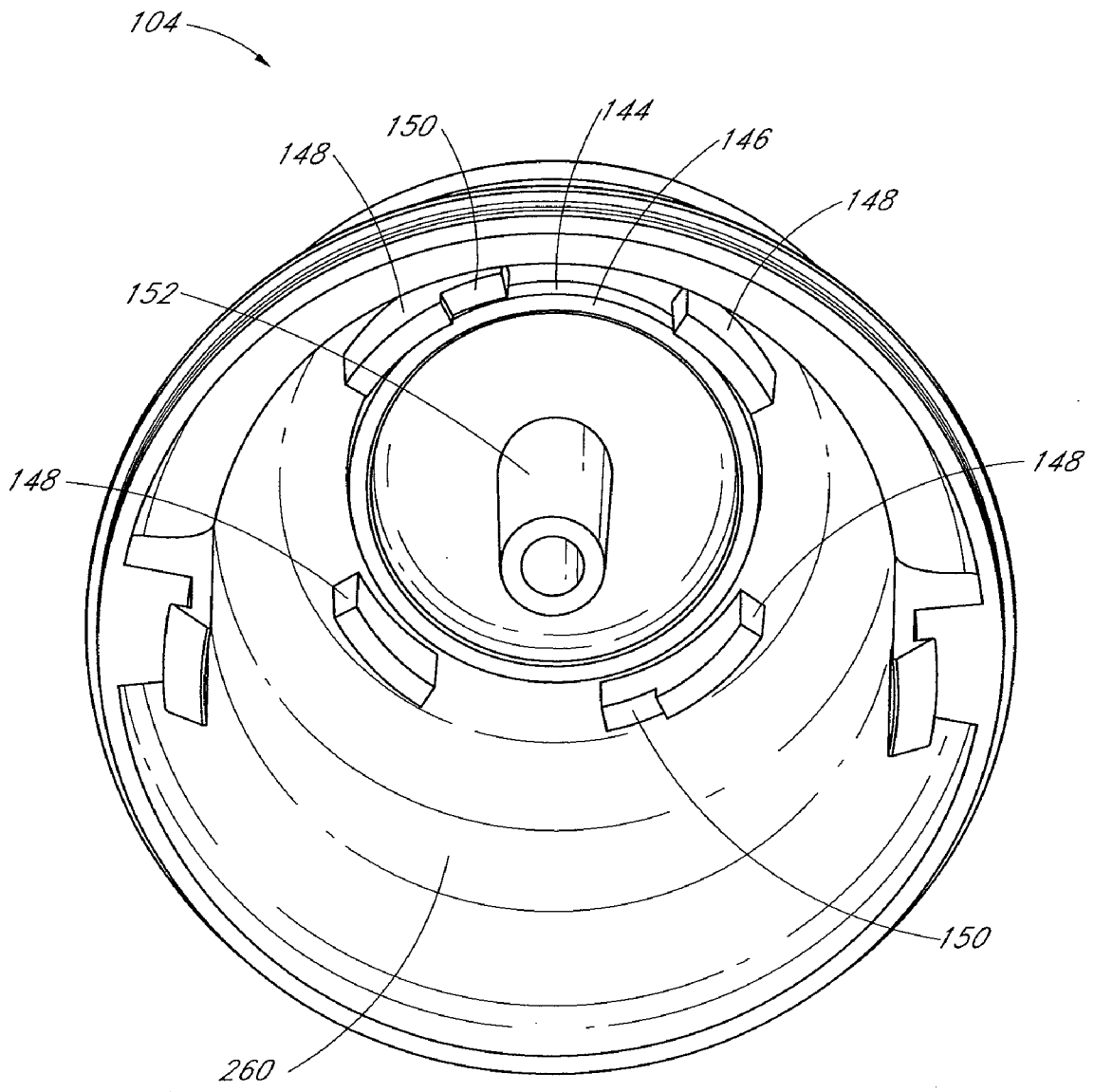

FIG. 5

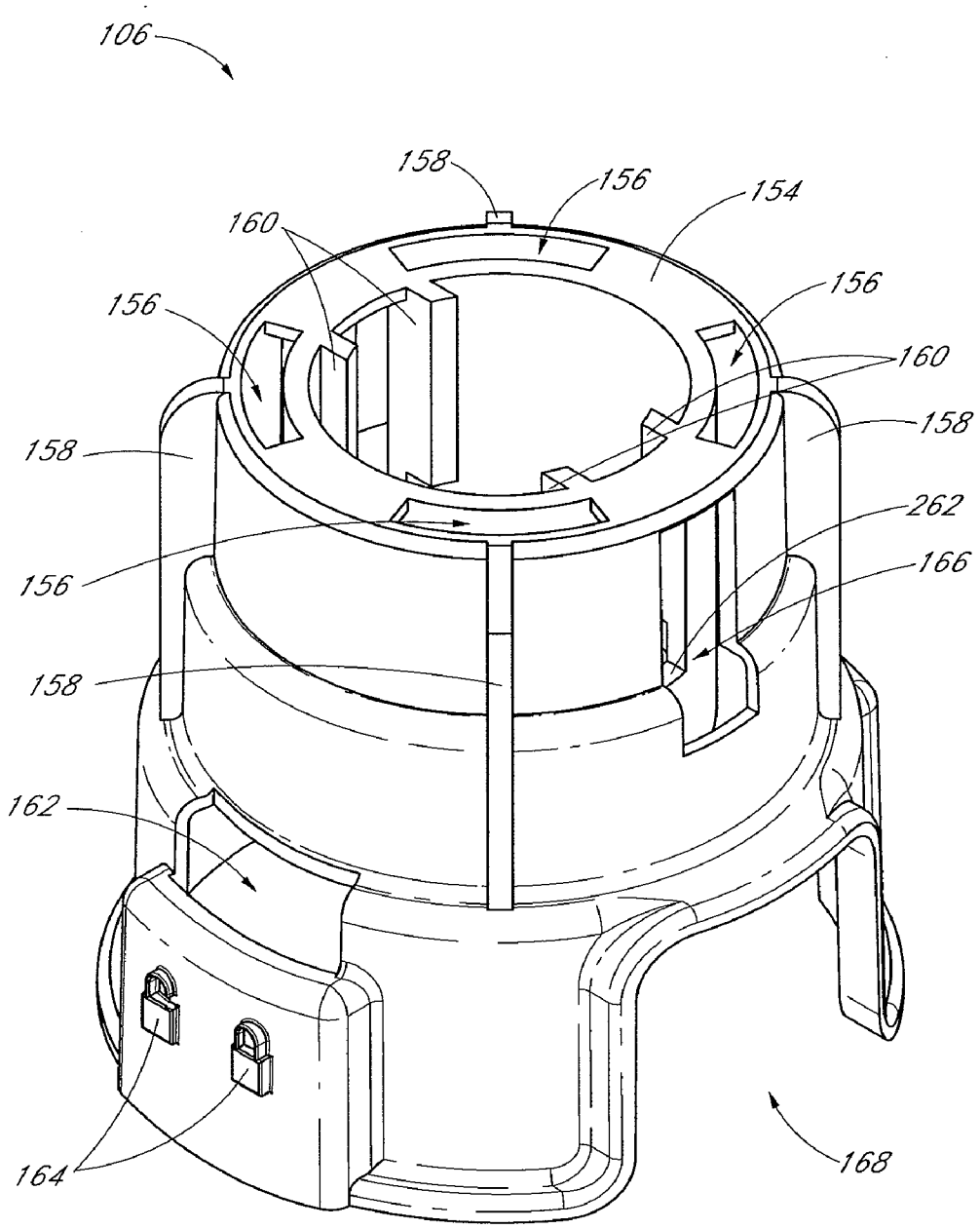
106
158
156
154
160
156
156
160
158
158
262
156
166
158
162
164
168

FIG. 6

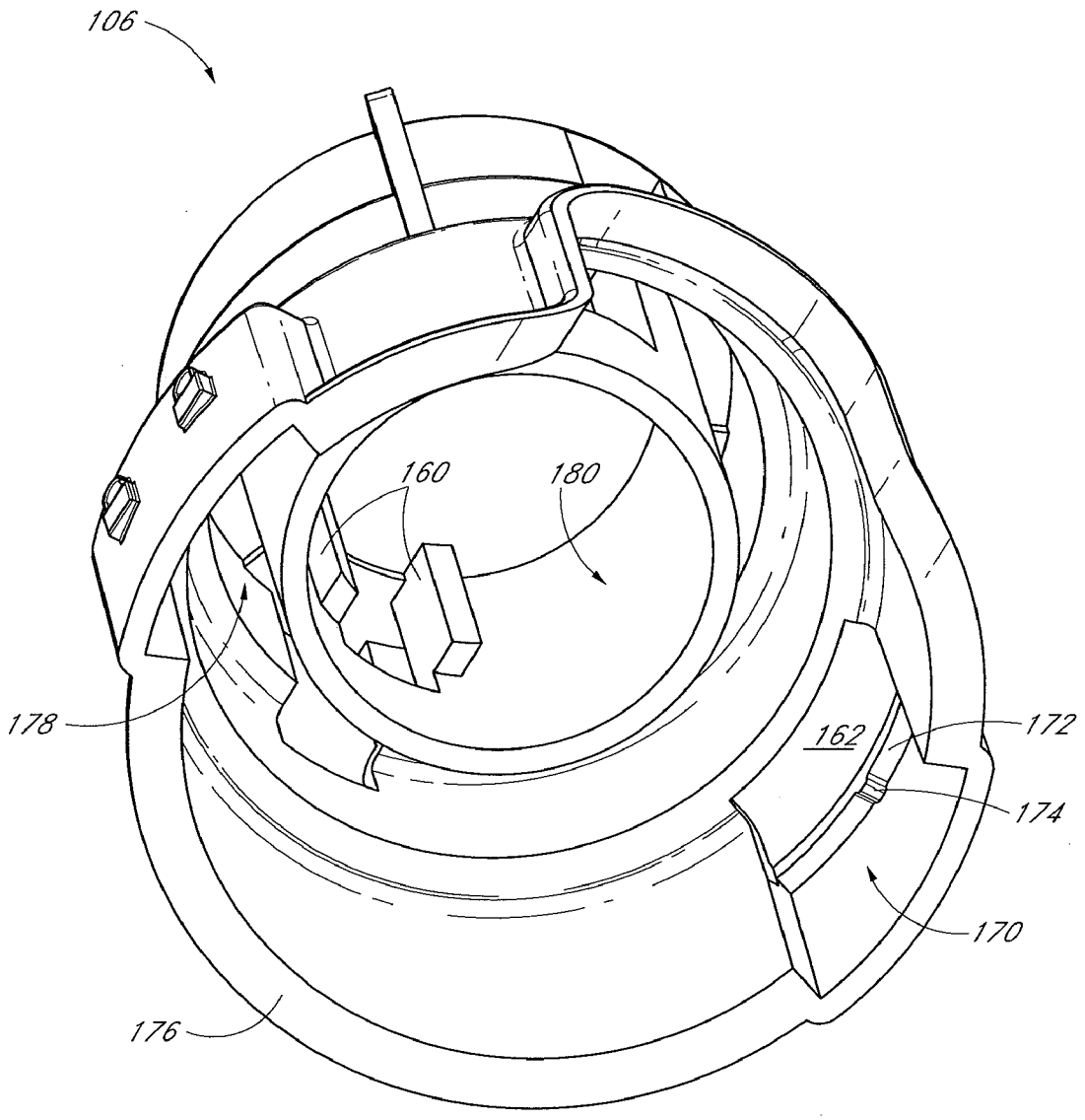

FIG. 7

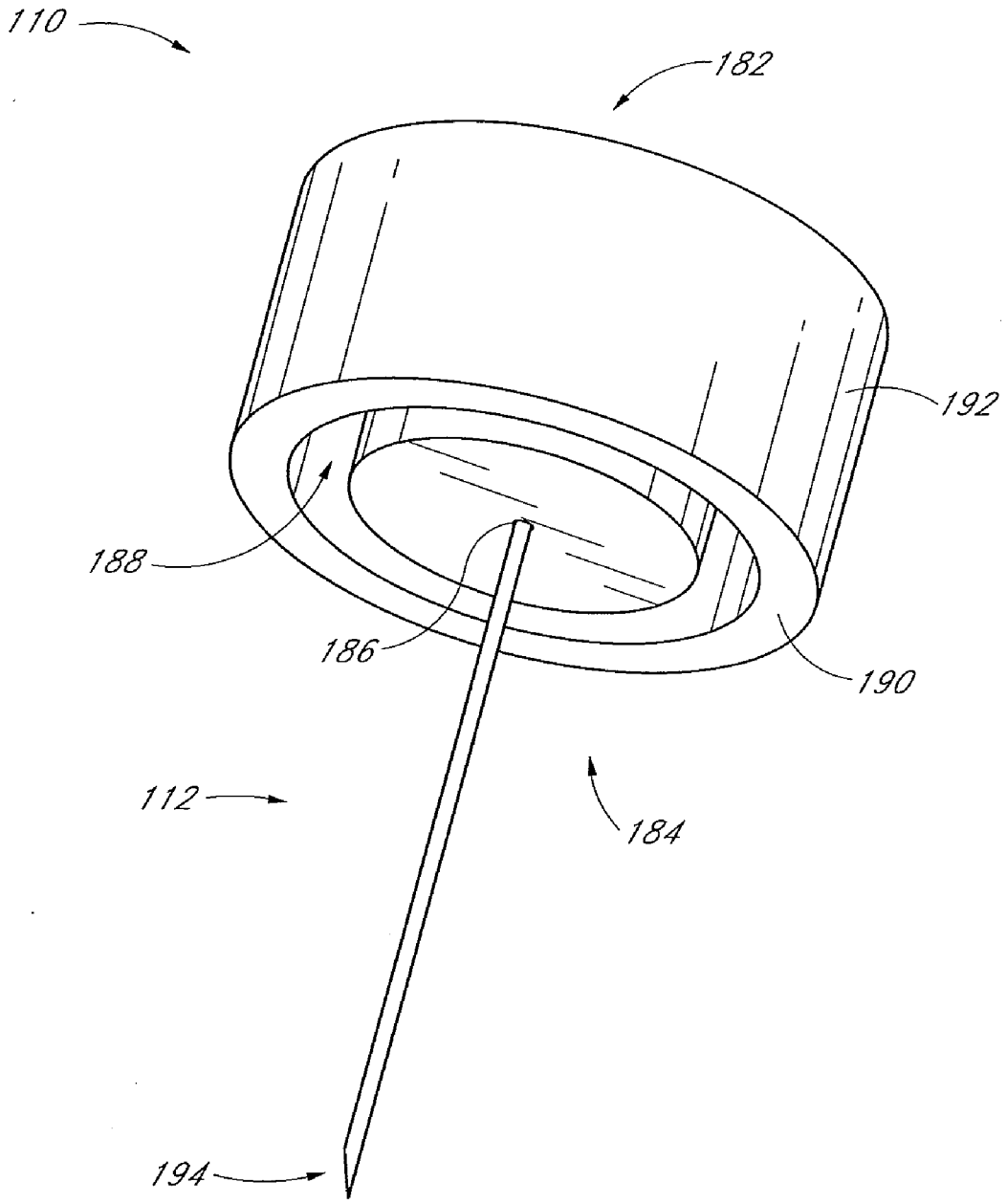

FIG. 8

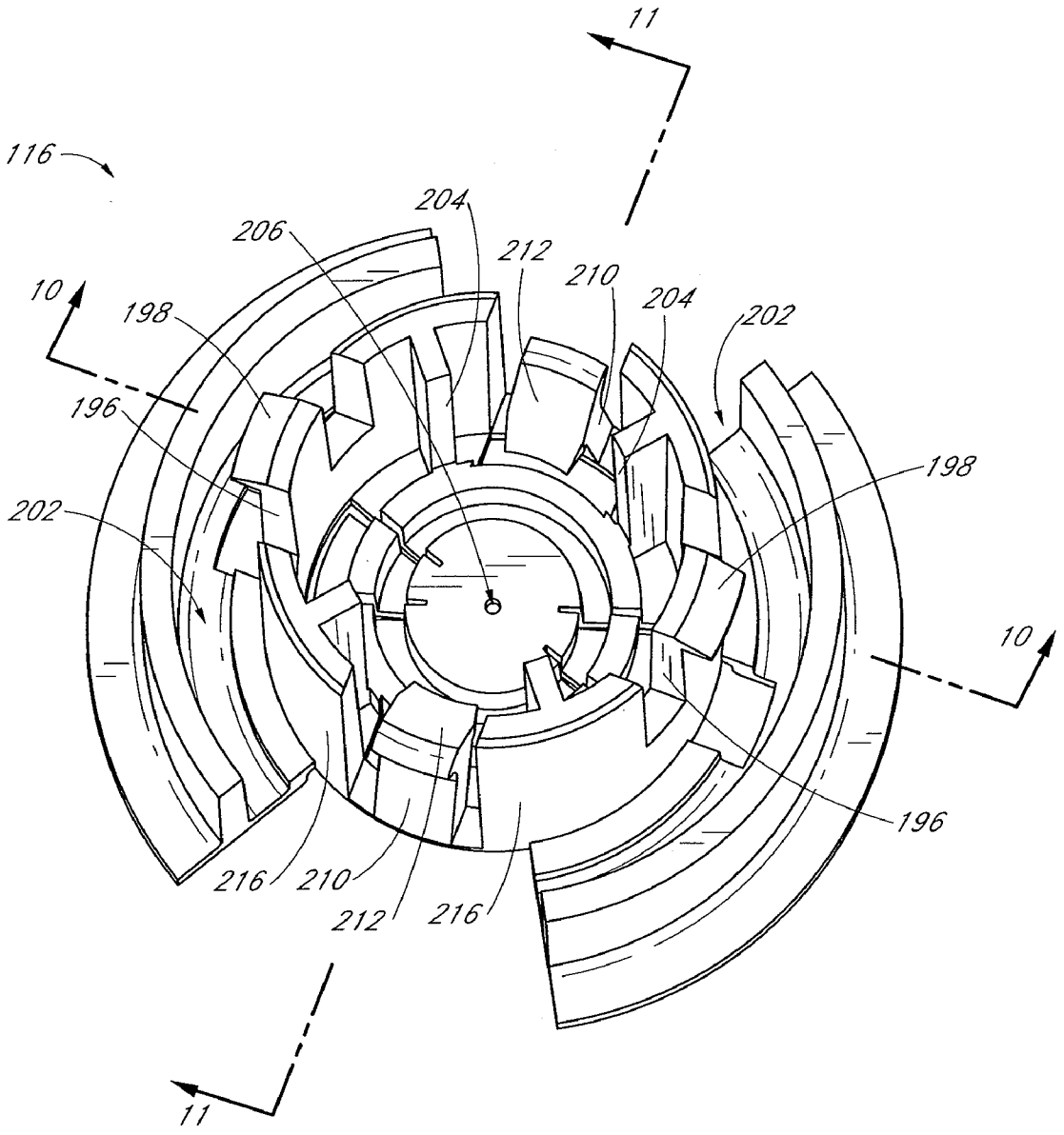
11
116
204
206
212
210
204
202
10
198
196
198
202
10
196
216
210
212
216
11

FIG. 9

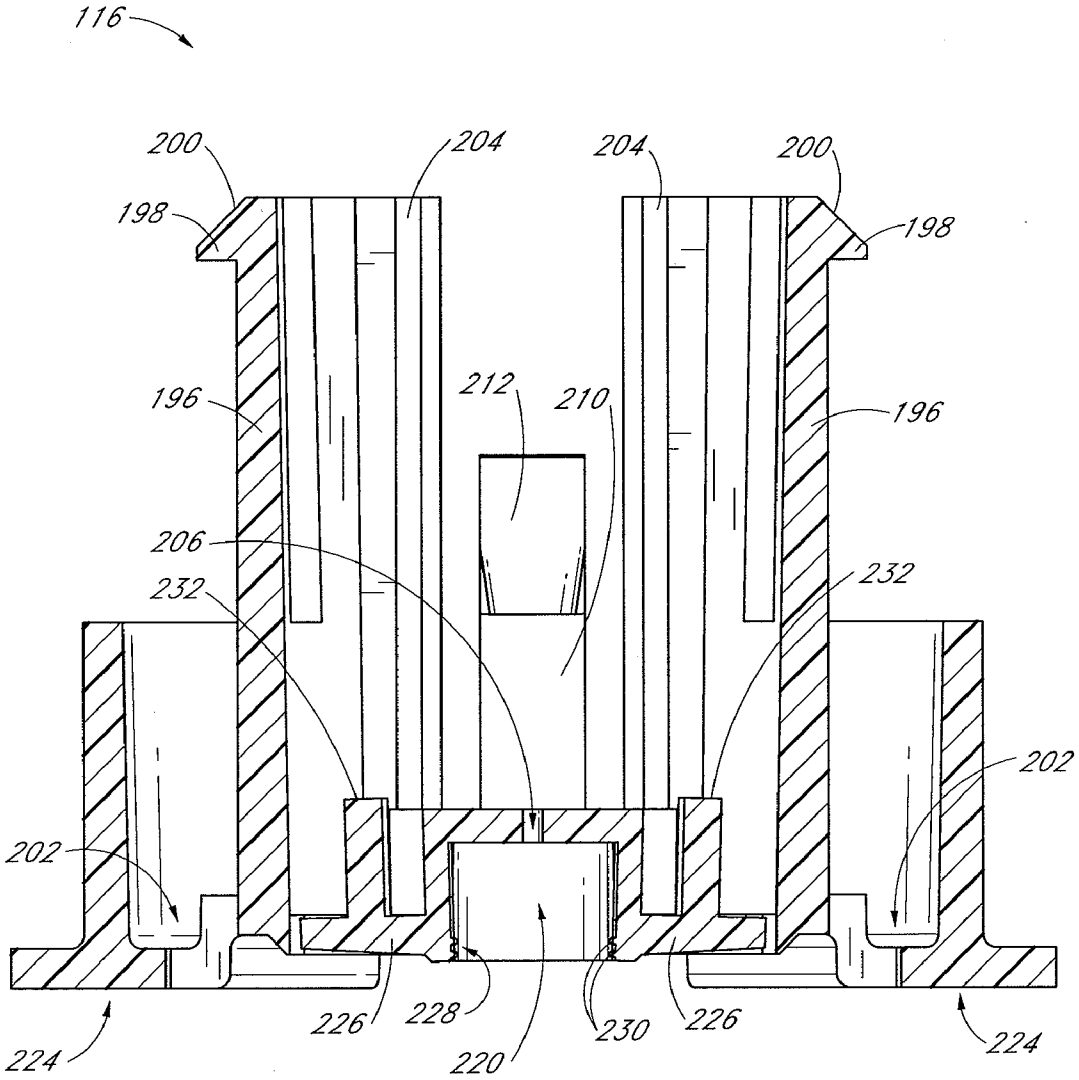
116
200
204
204
200
198
198
196
212
210
196
206
232
232
202
202
224
226
228
220
230
226
224

FIG. 10

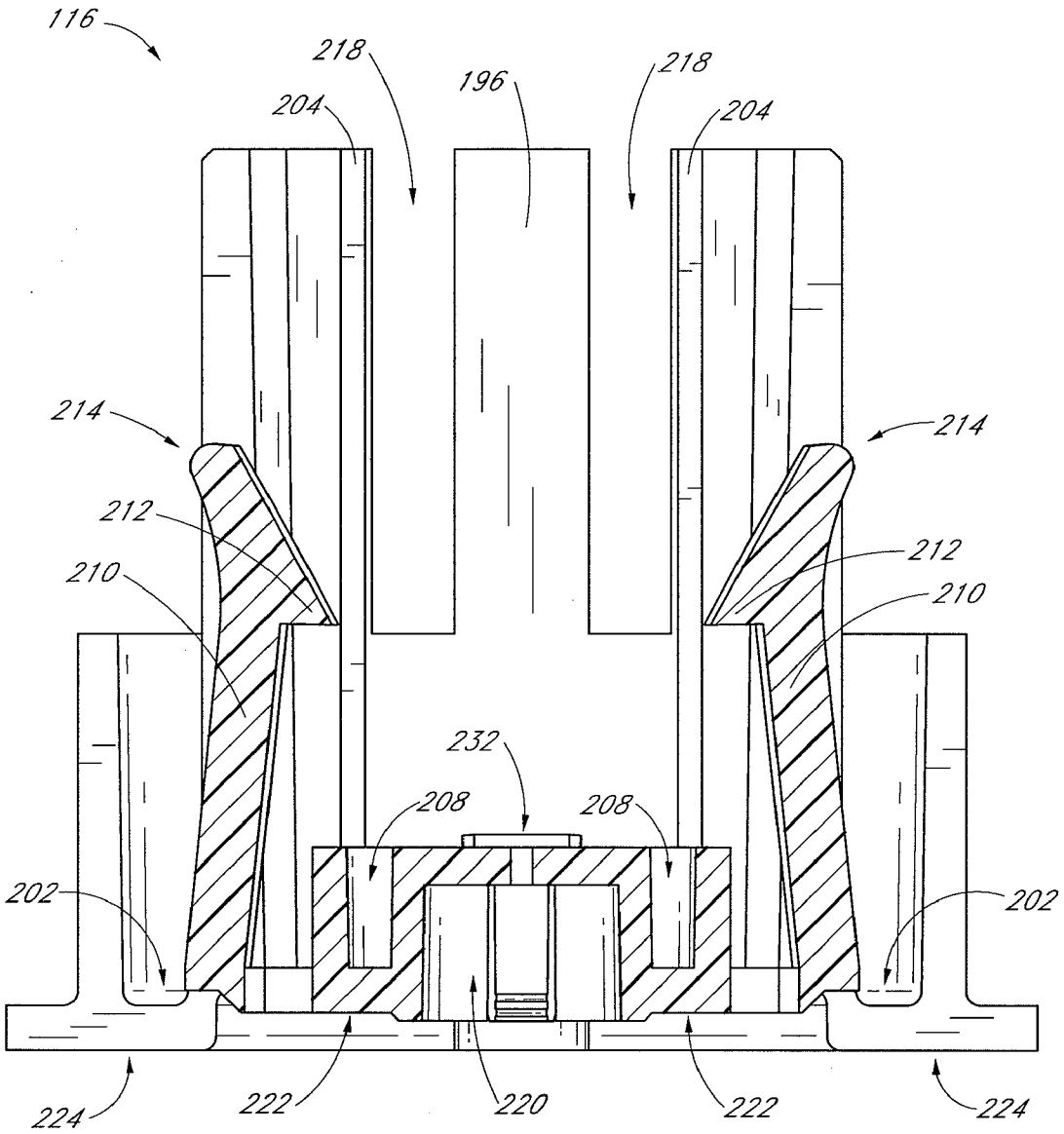
116
218
196
218
204
204
214
214
212
212
210
210
232
208
208
202
202
224
222
220
222
224

FIG. 11

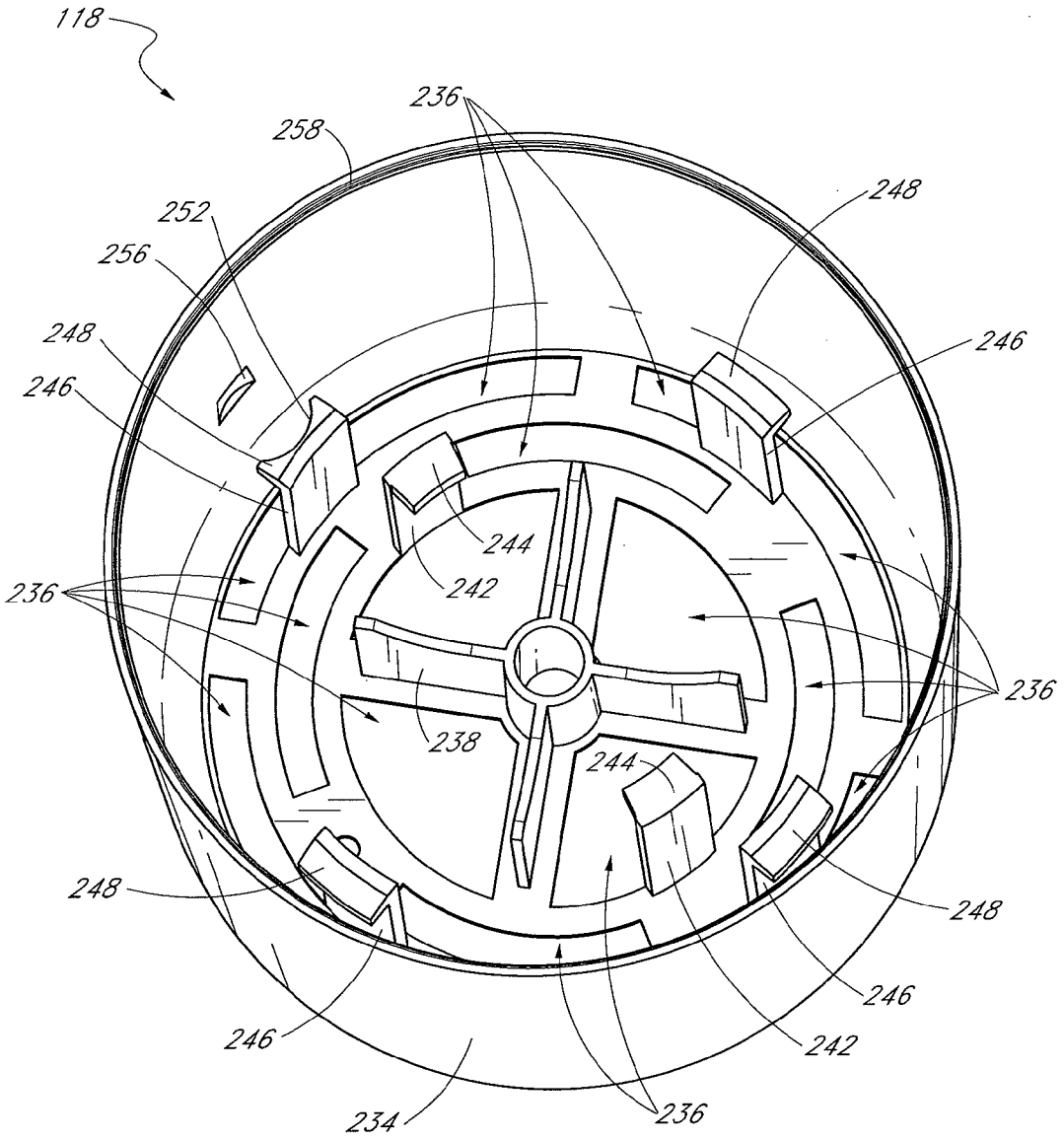
118
236
258
248
252
256
248
246
246
244
242
236
236
238
244
248
248
246
246
242
234
236

FIG. 12

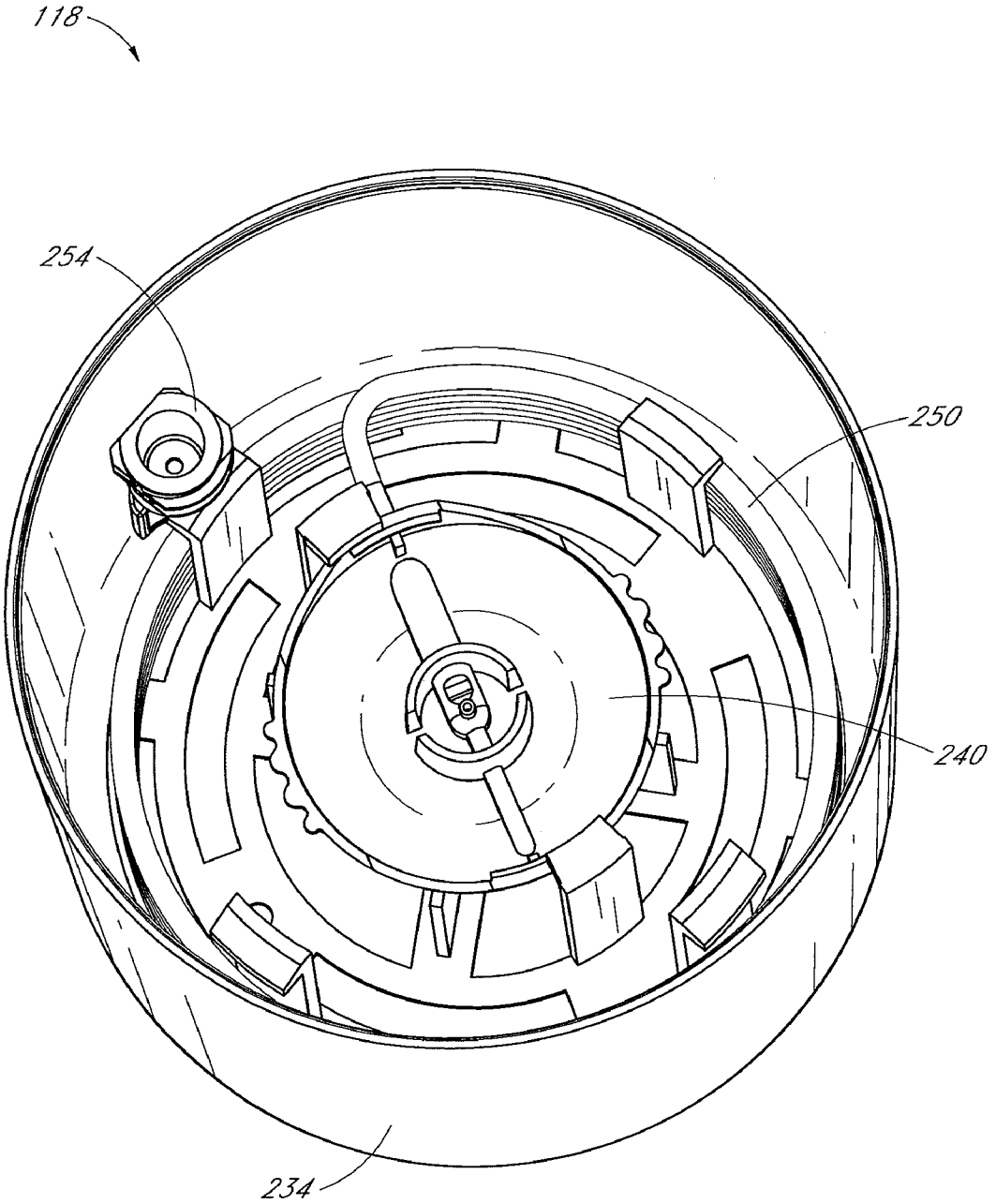

FIG. 13

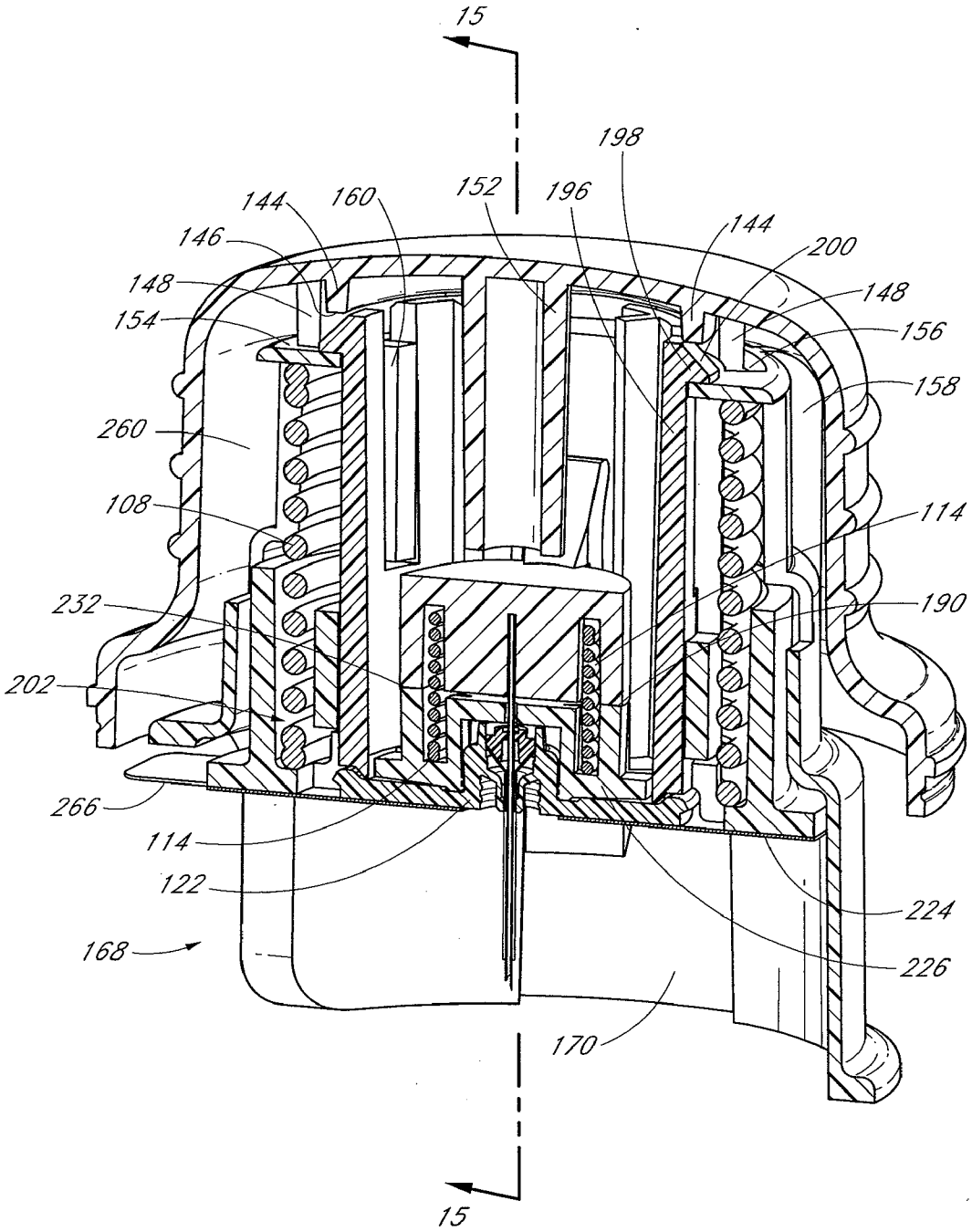
15
198
144
160
152
196
144
146
200
148
148
154
156
158
260
108
114
232
190
202
266
114
122
224
168
226
170
15

FIG. 14

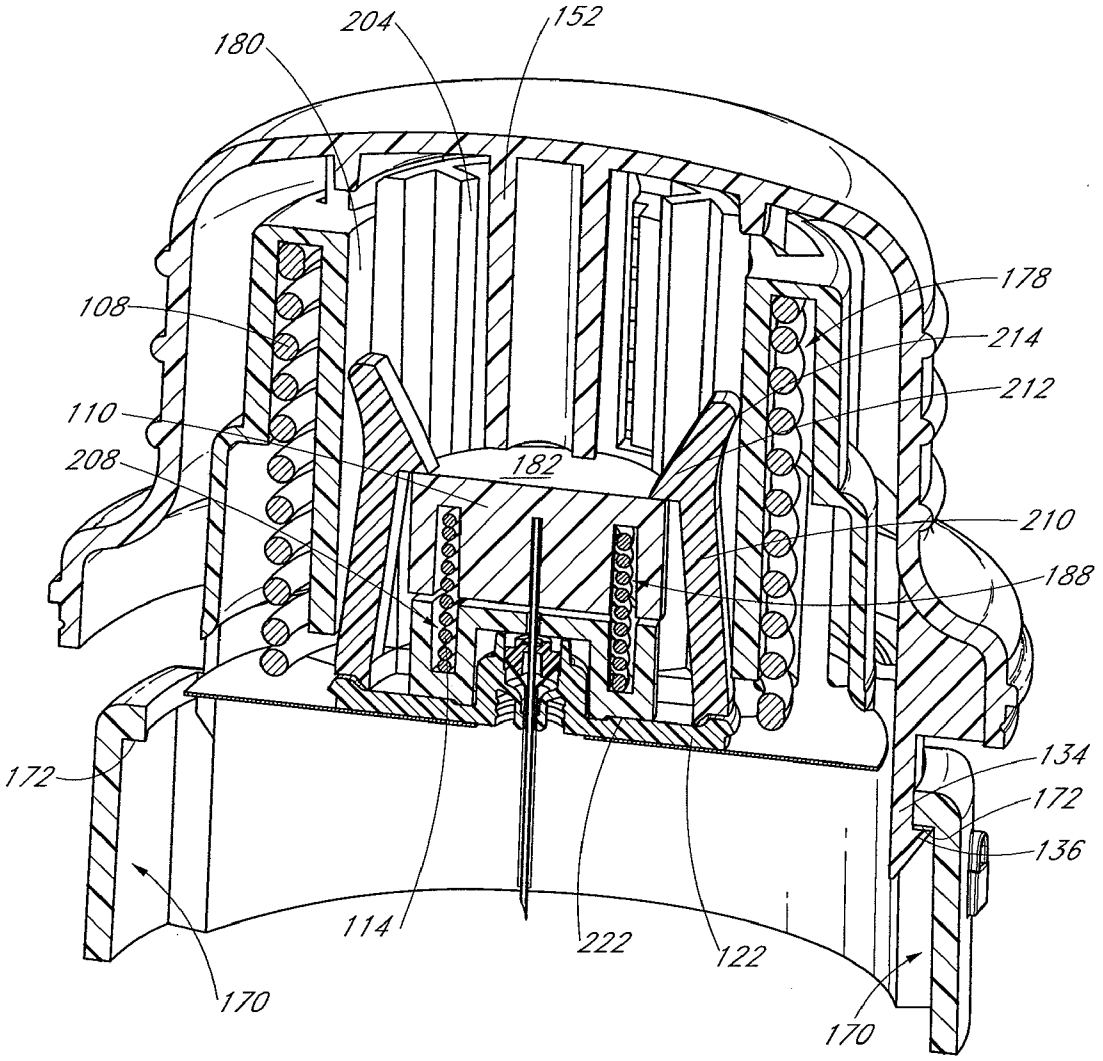
180
204
152
108
178
214
212
110
208
182
210
188
172
134
172
136
114
222
122
170
170

FIG. 15

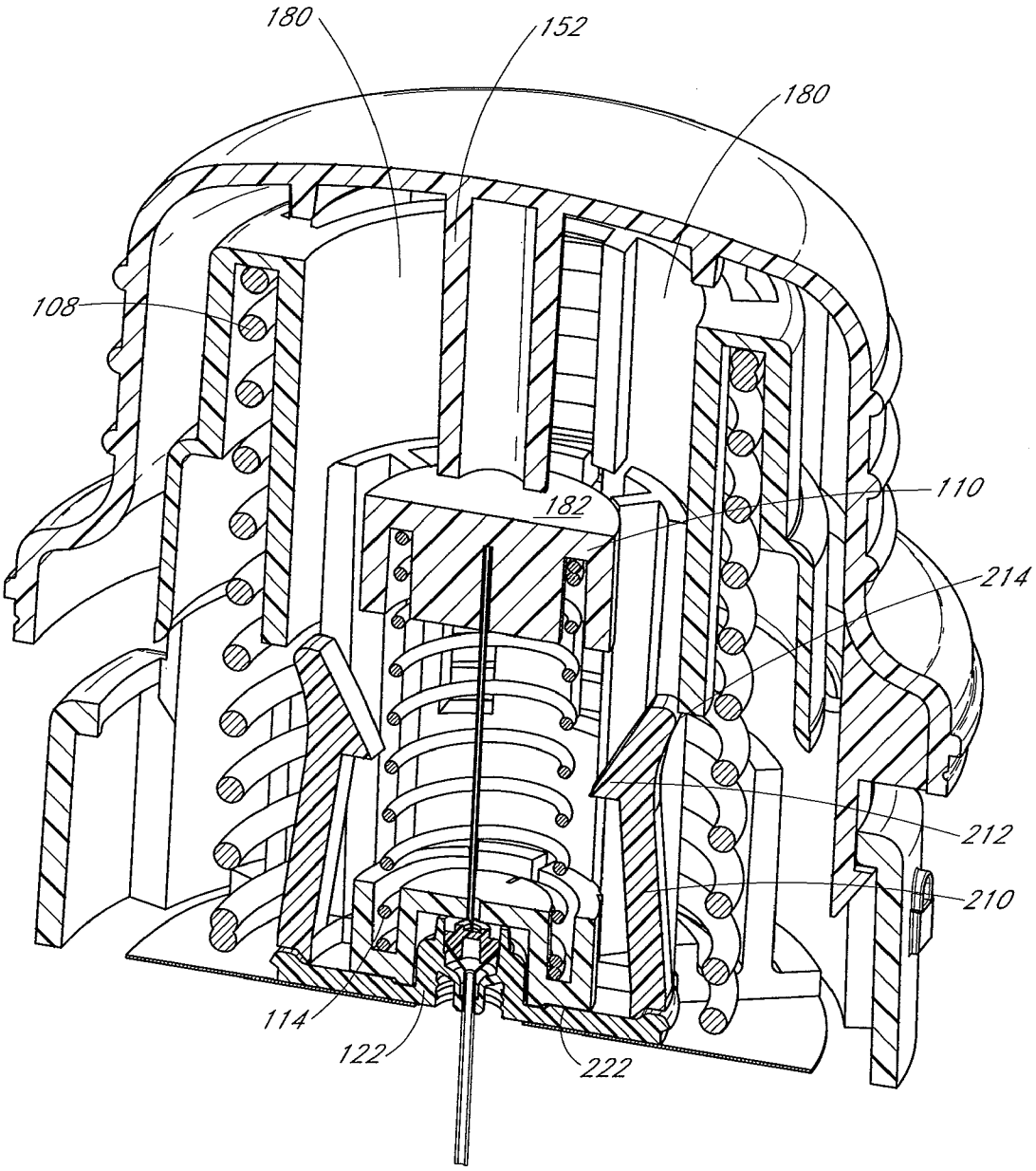

FIG. 16

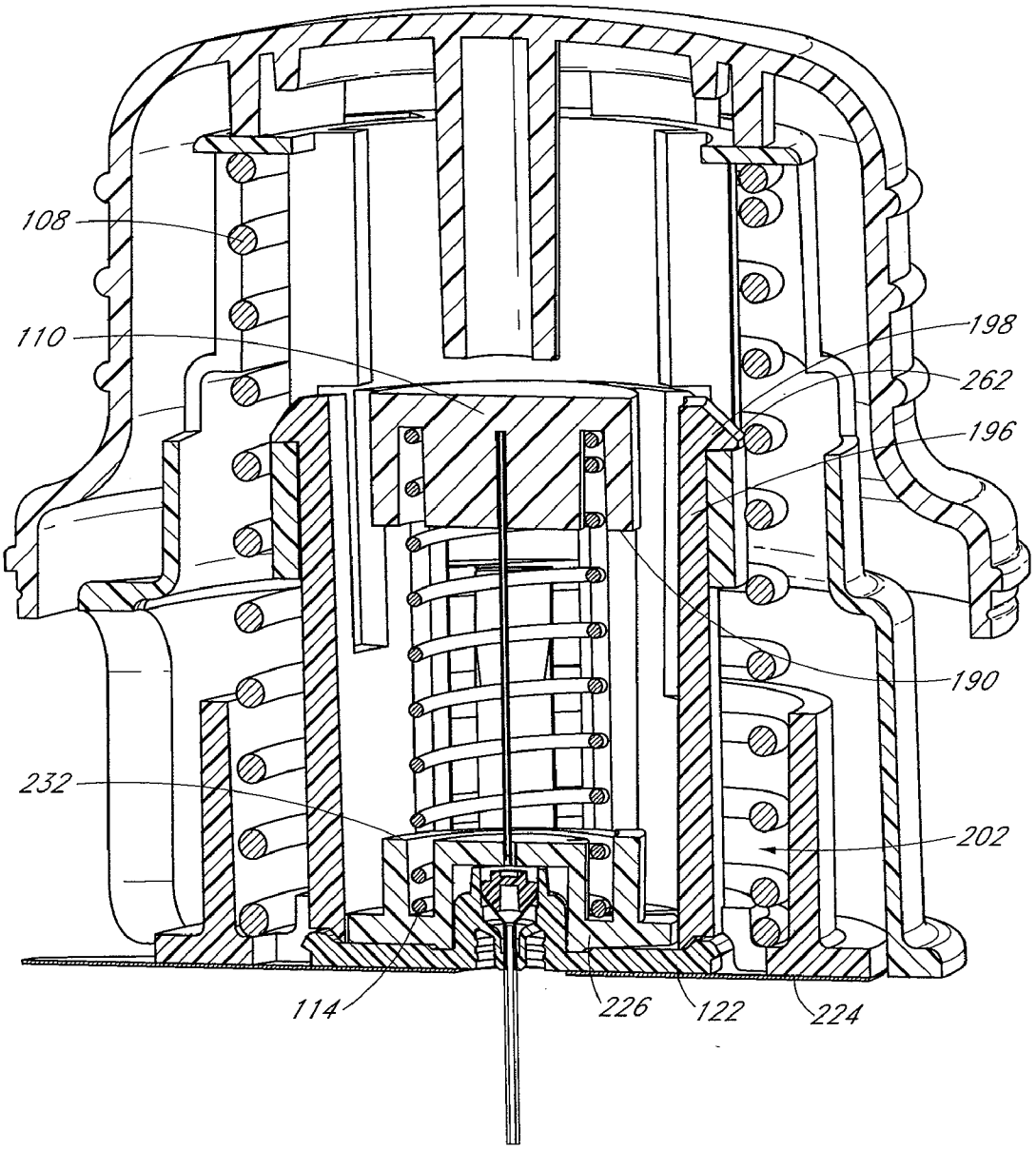

FIG. 17

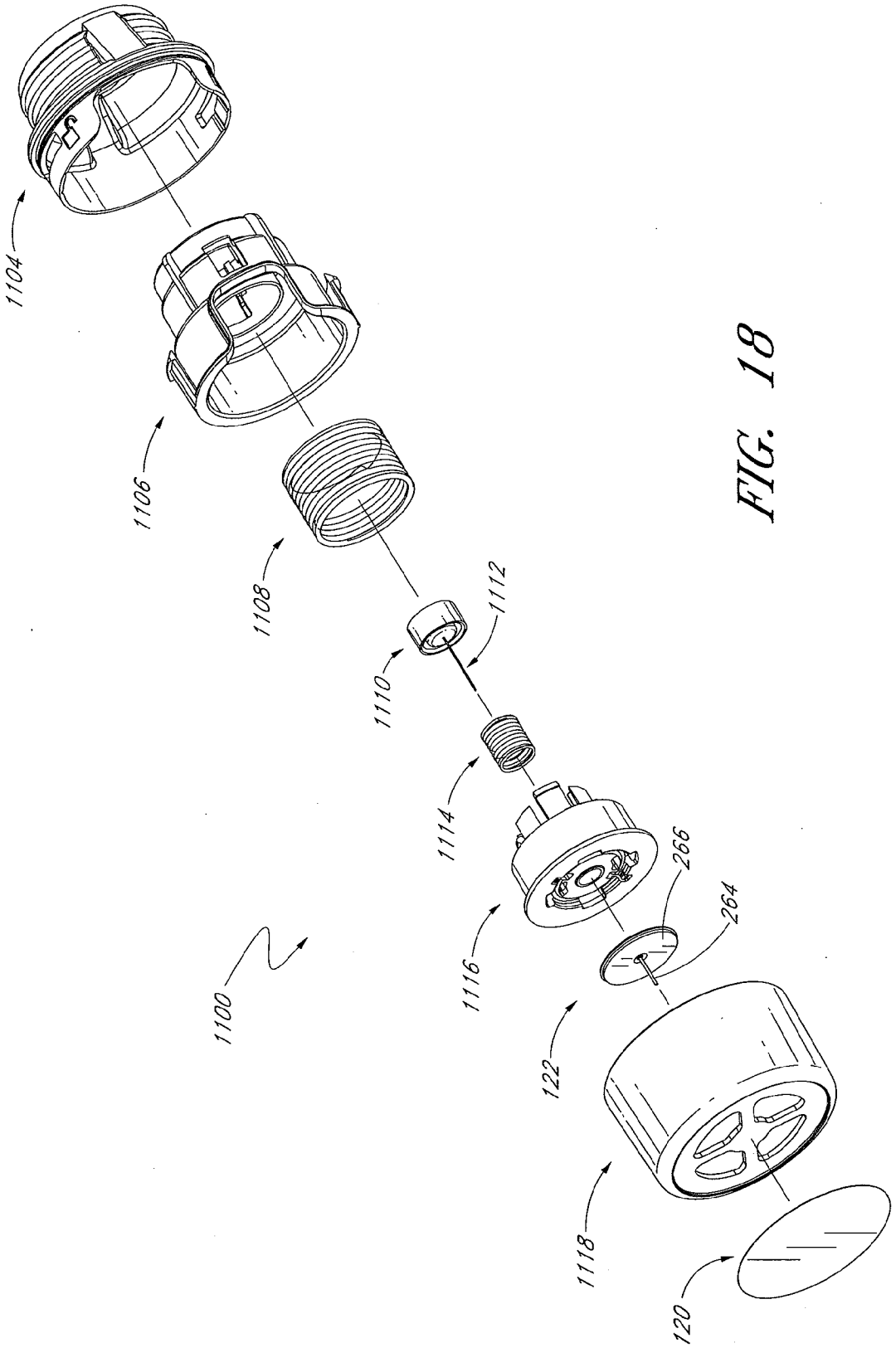

FIG. 18

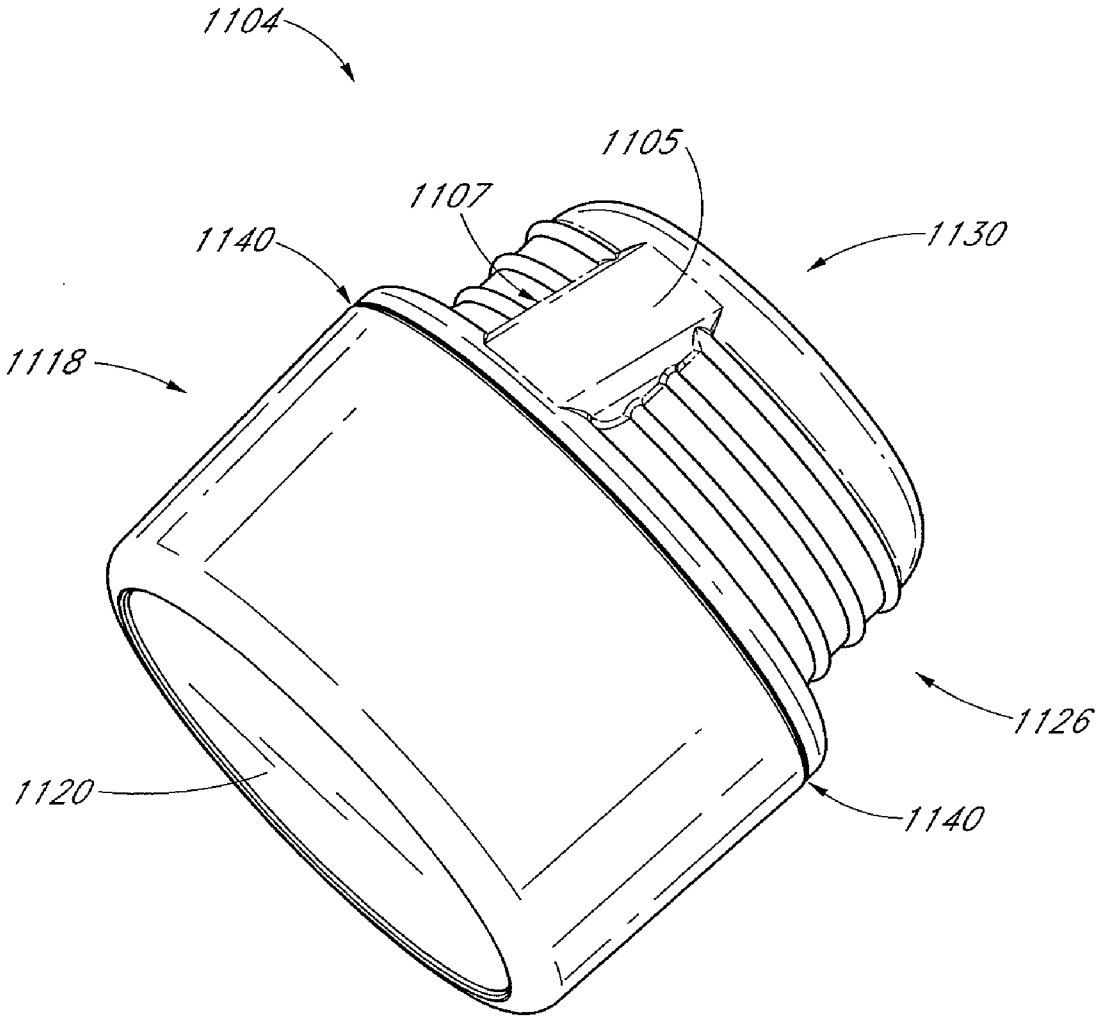

FIG. 19

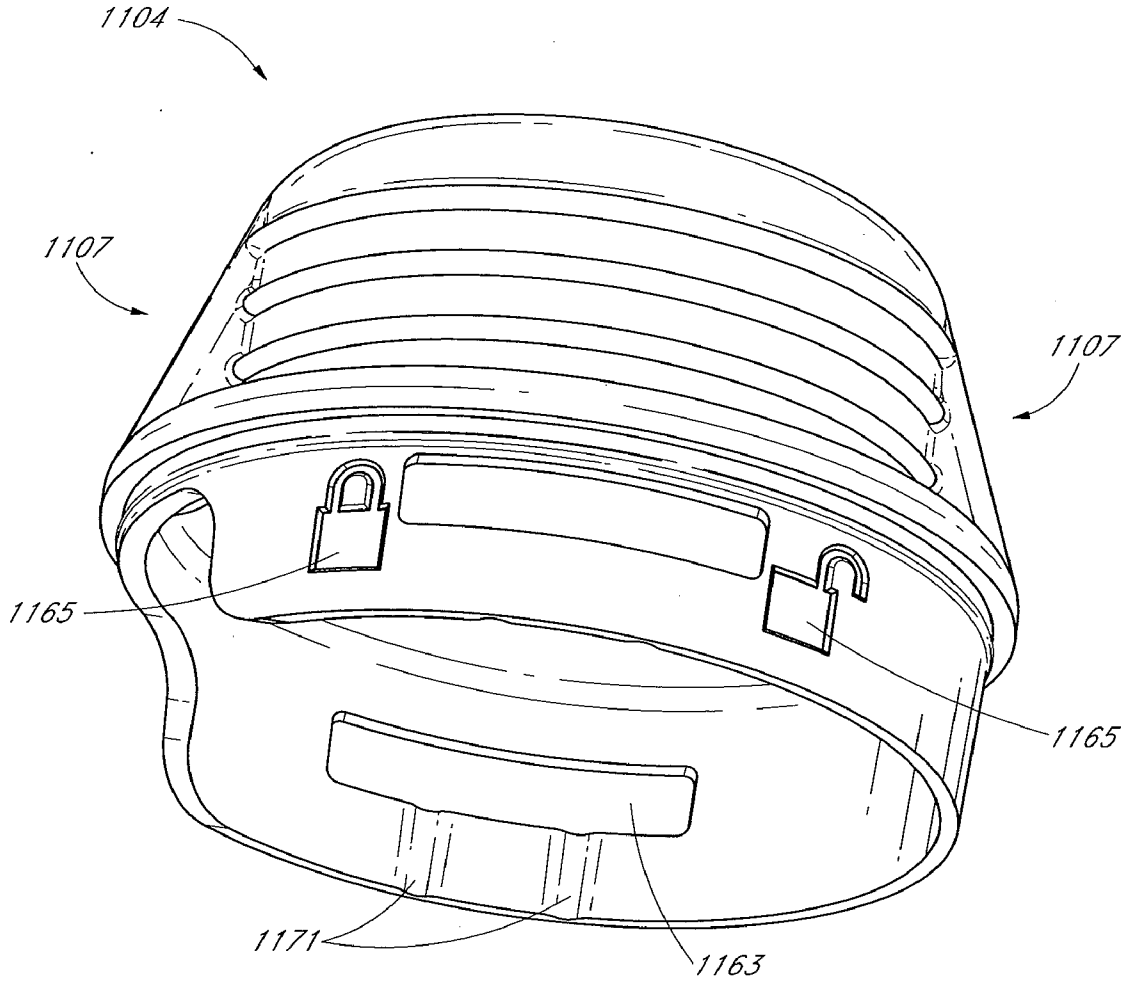

FIG. 20

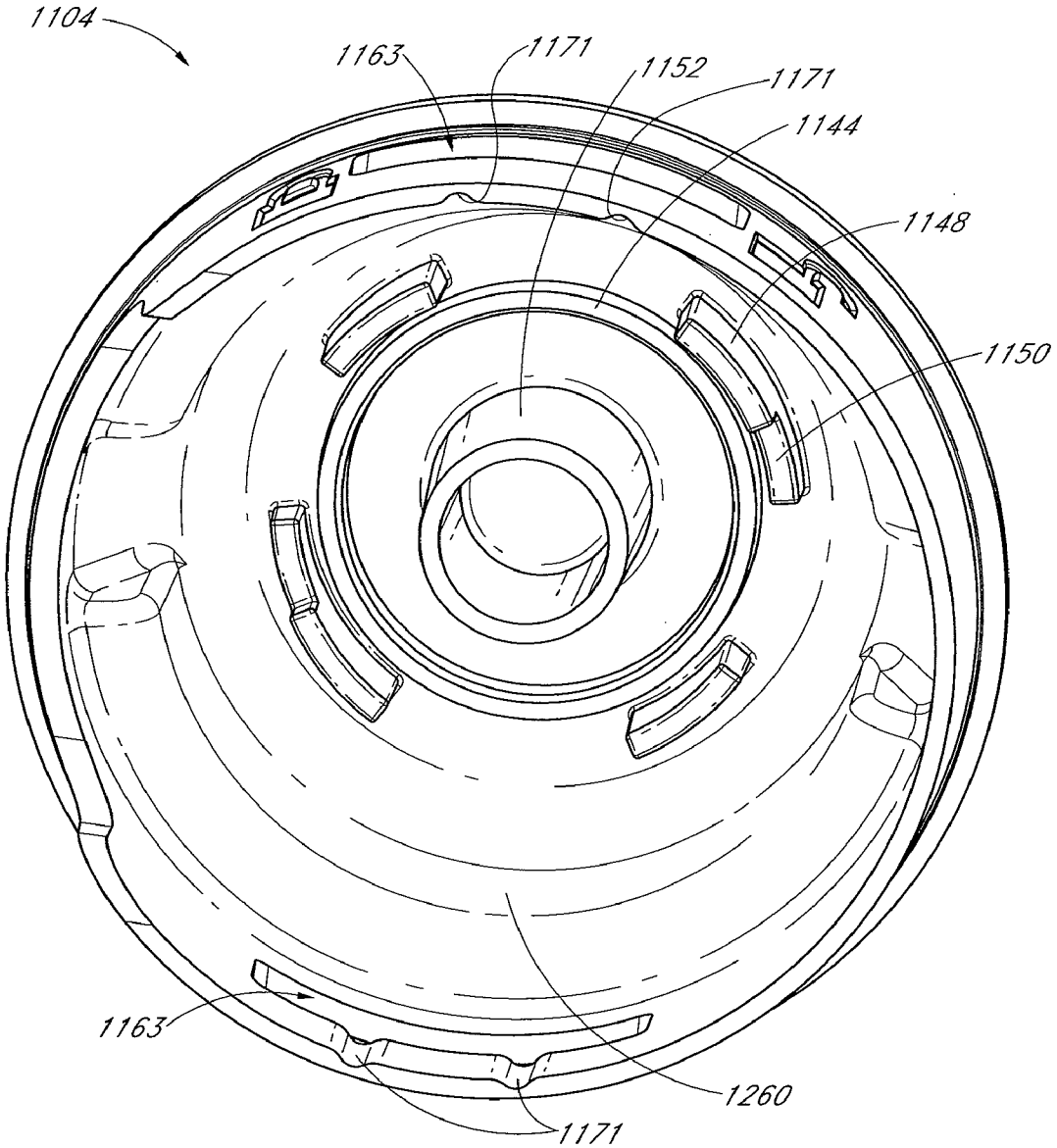

FIG. 21

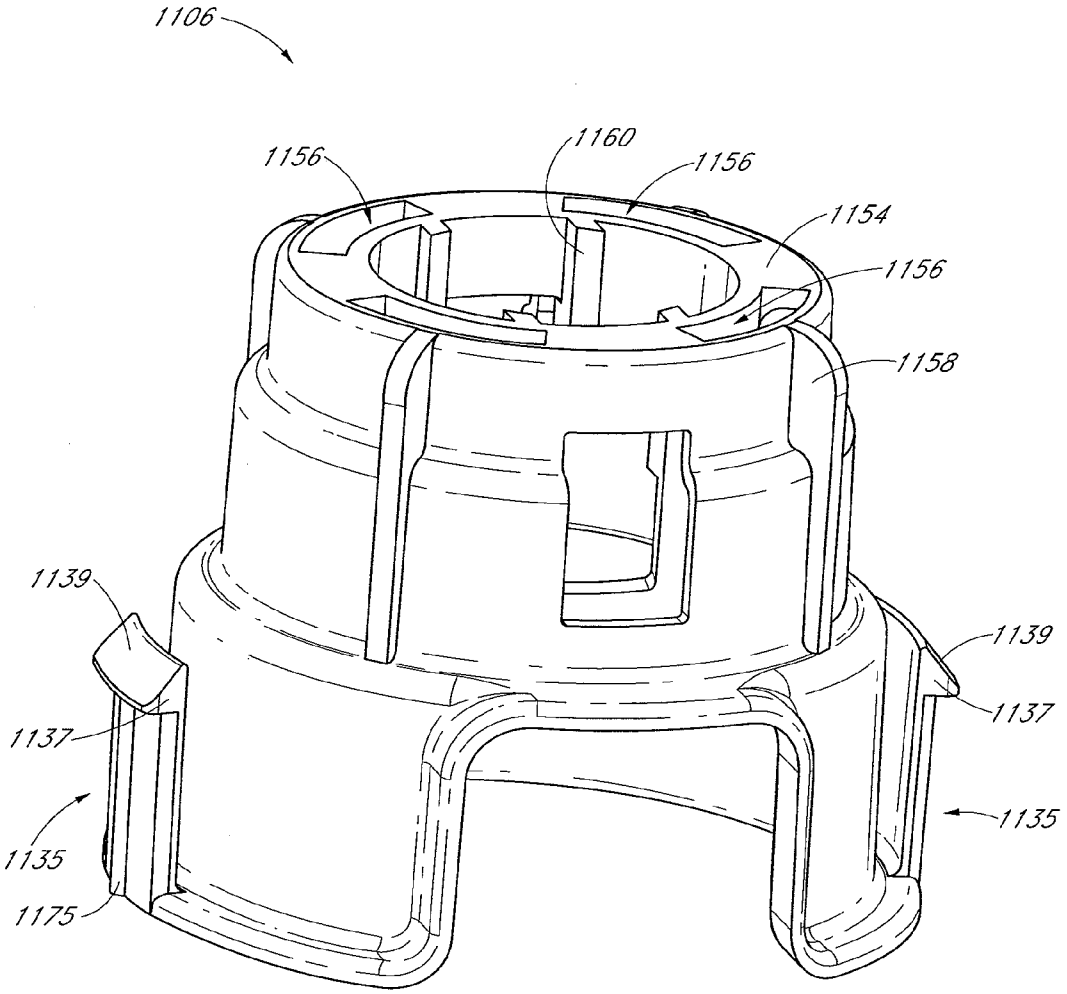
1106
1156
1160
1156
1154
1156
1158
1139
1139
1137
1137
1135
1135
1175

FIG. 22

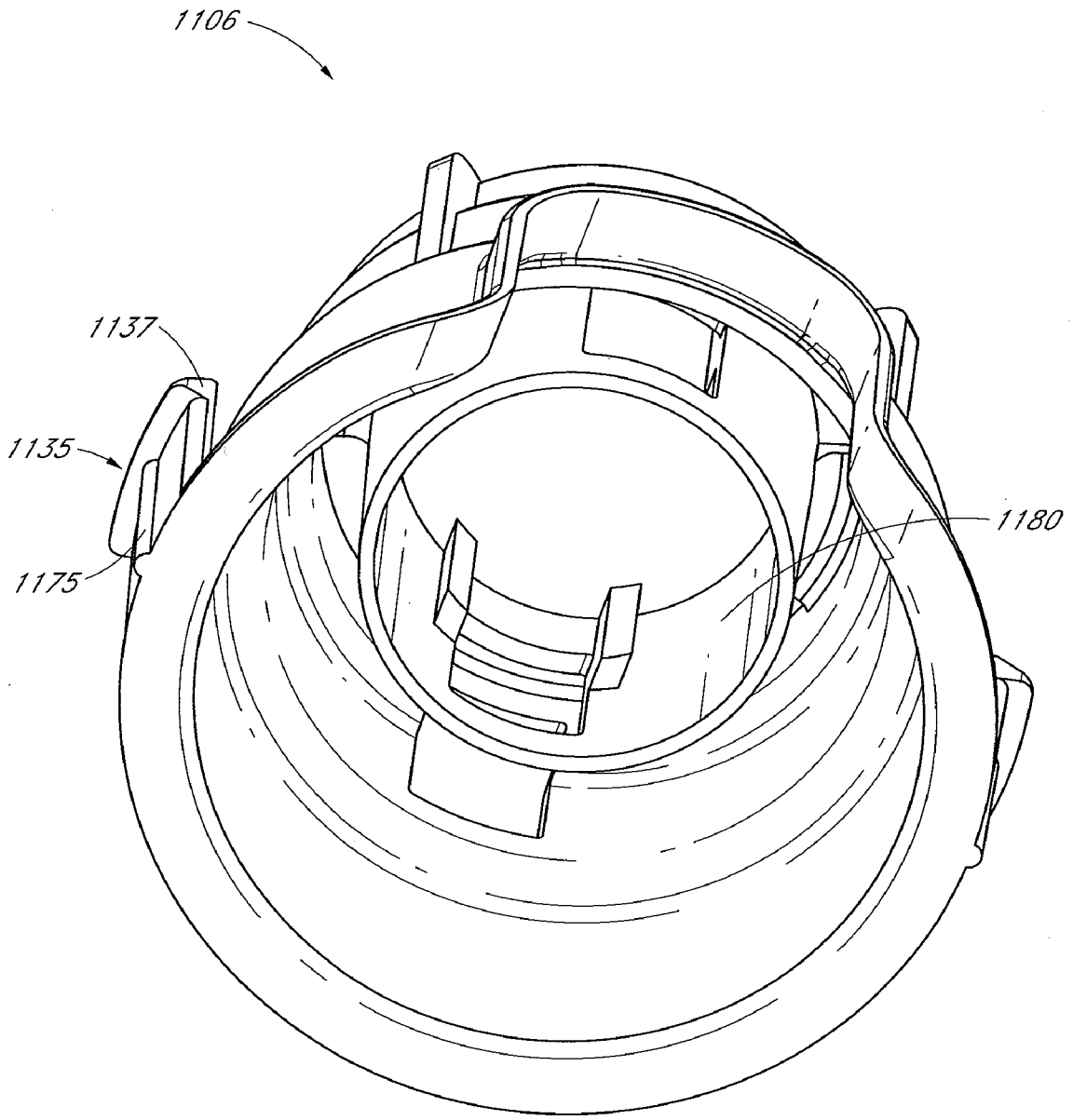

FIG. 23

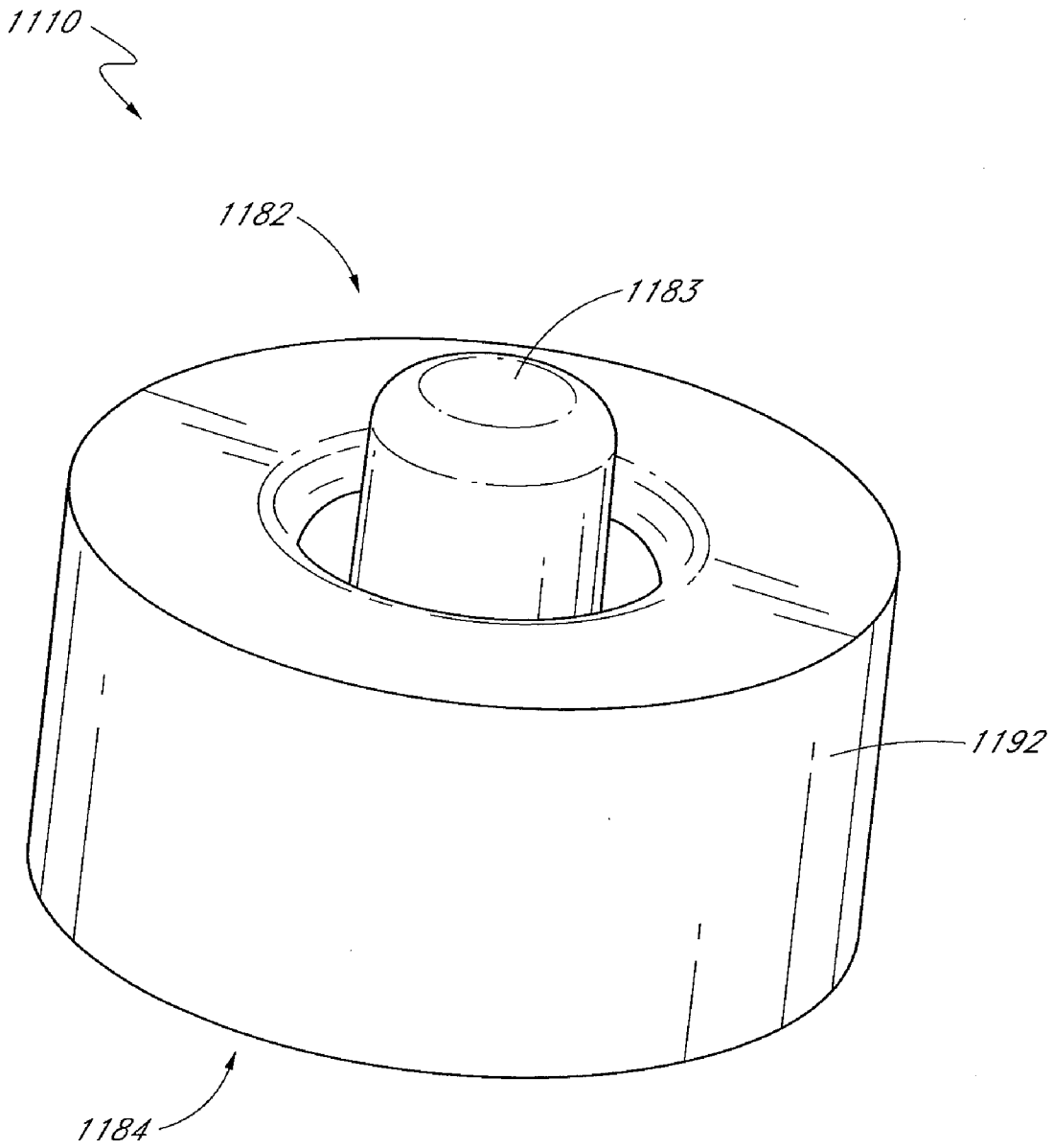

FIG. 24

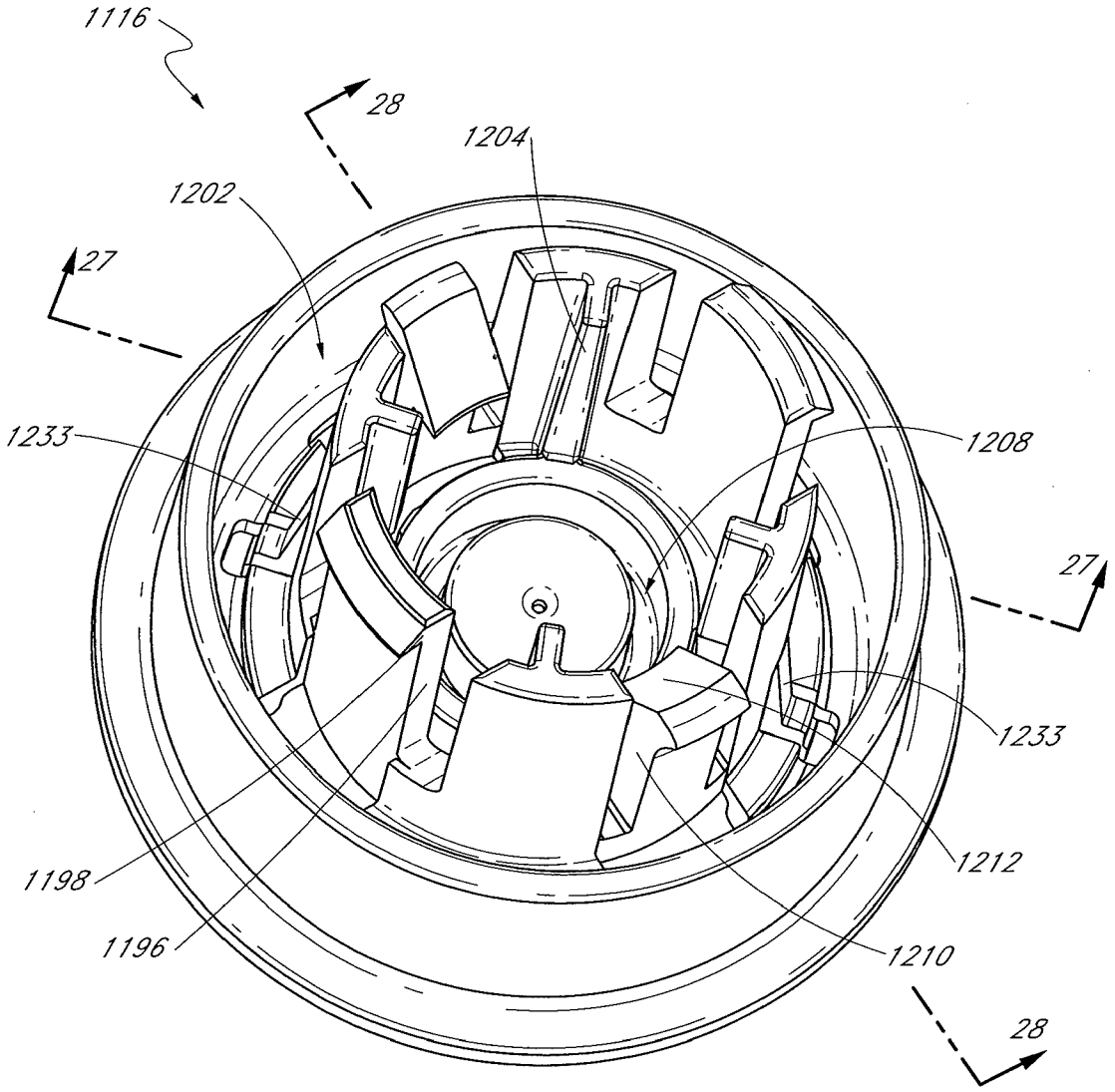

FIG. 25

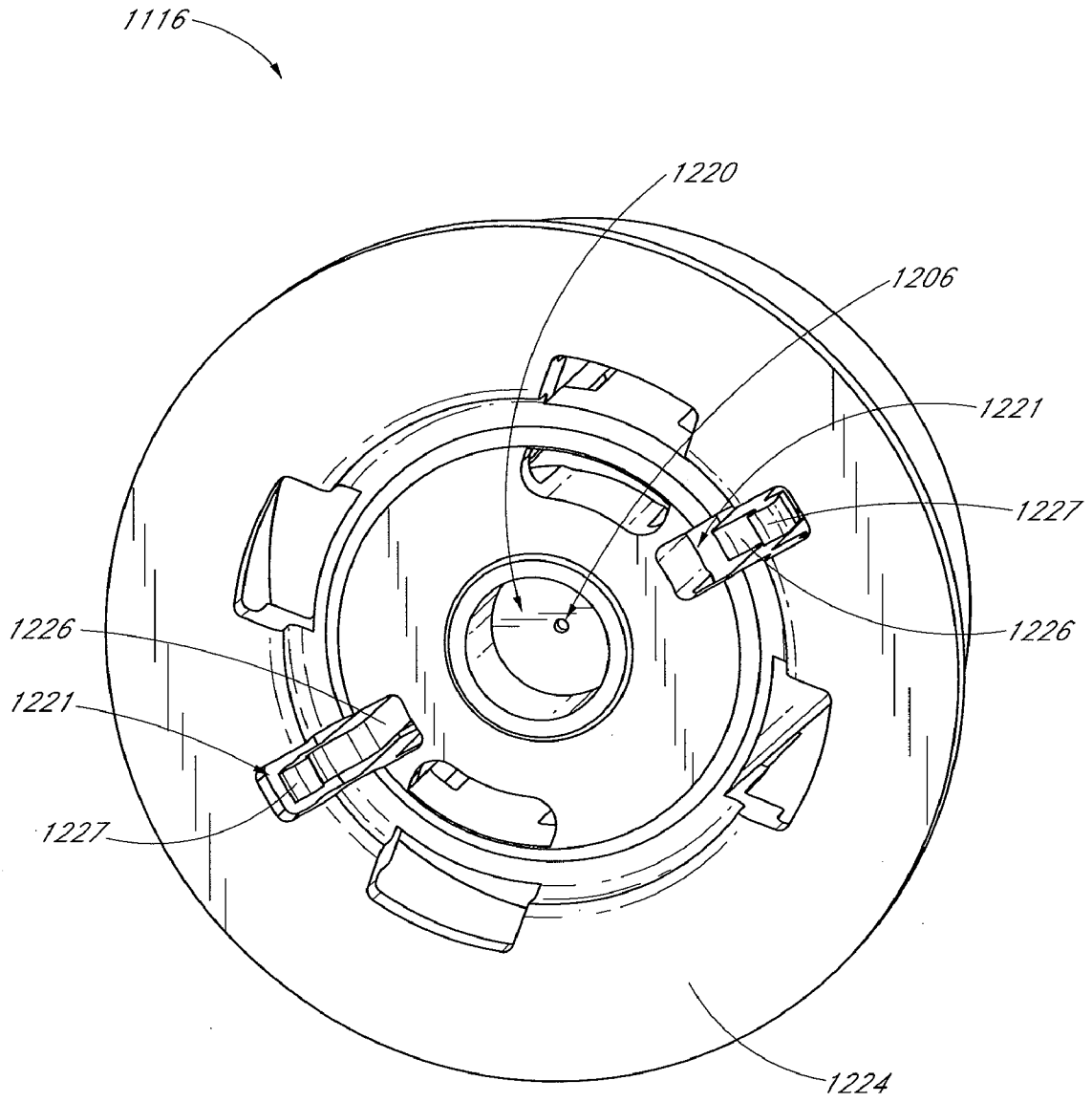

FIG. 26

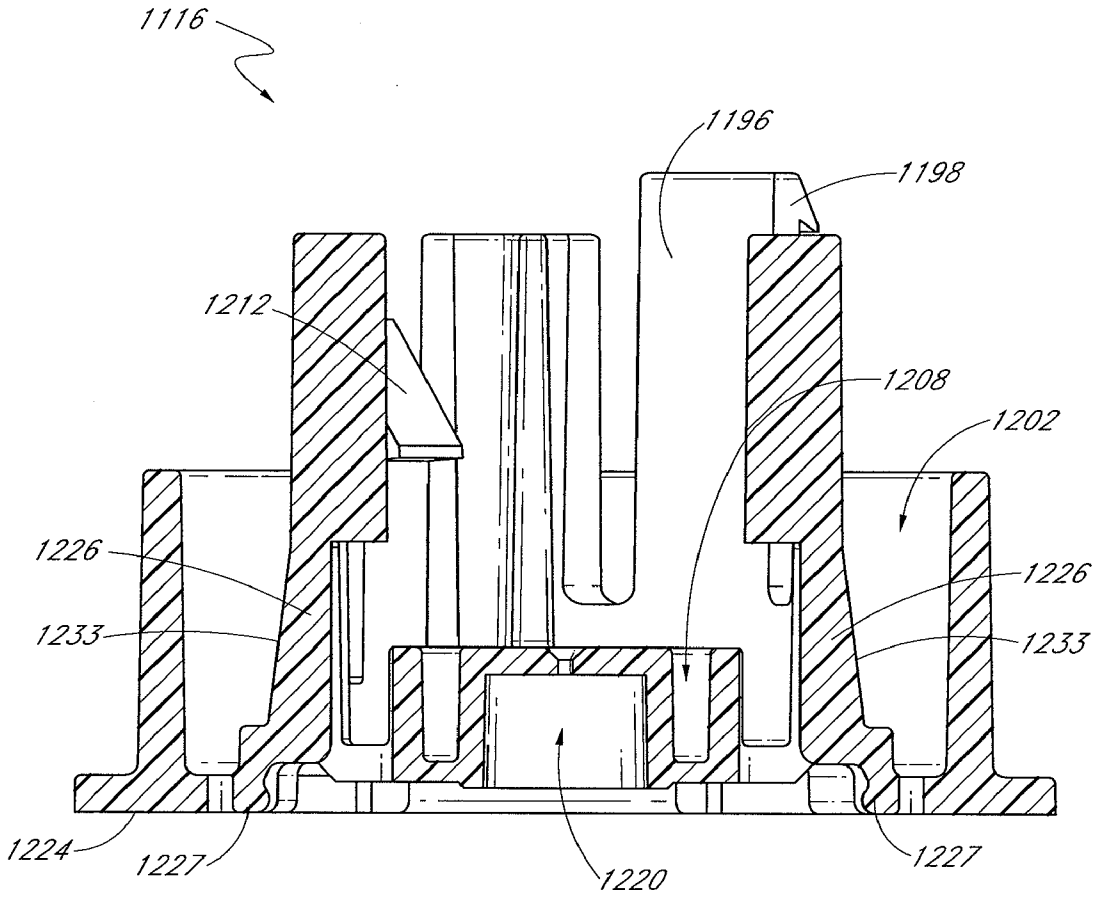
1116
1196
1198
1212
1208
1202
1226
1226
1233
1233
1224
1227
1220
1227

FIG. 27

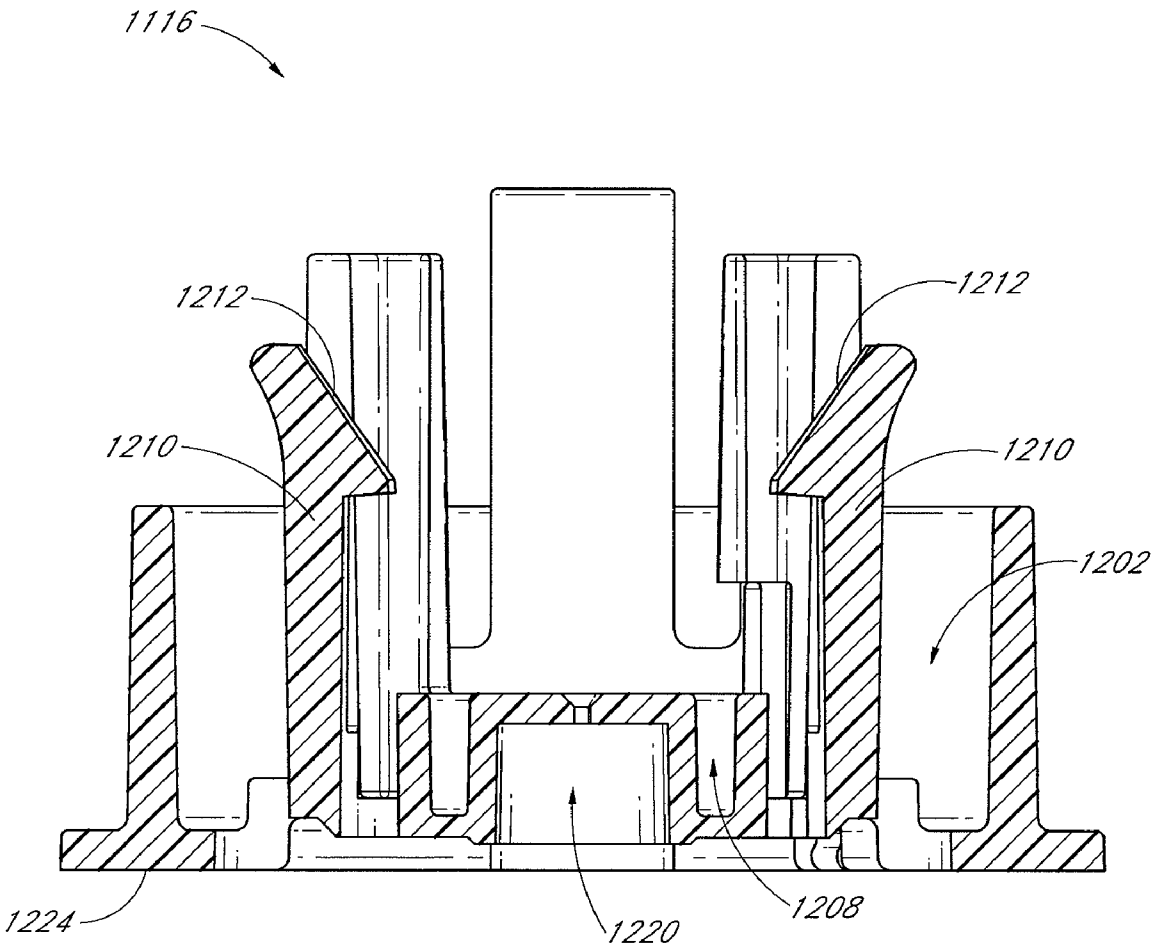

FIG. 28

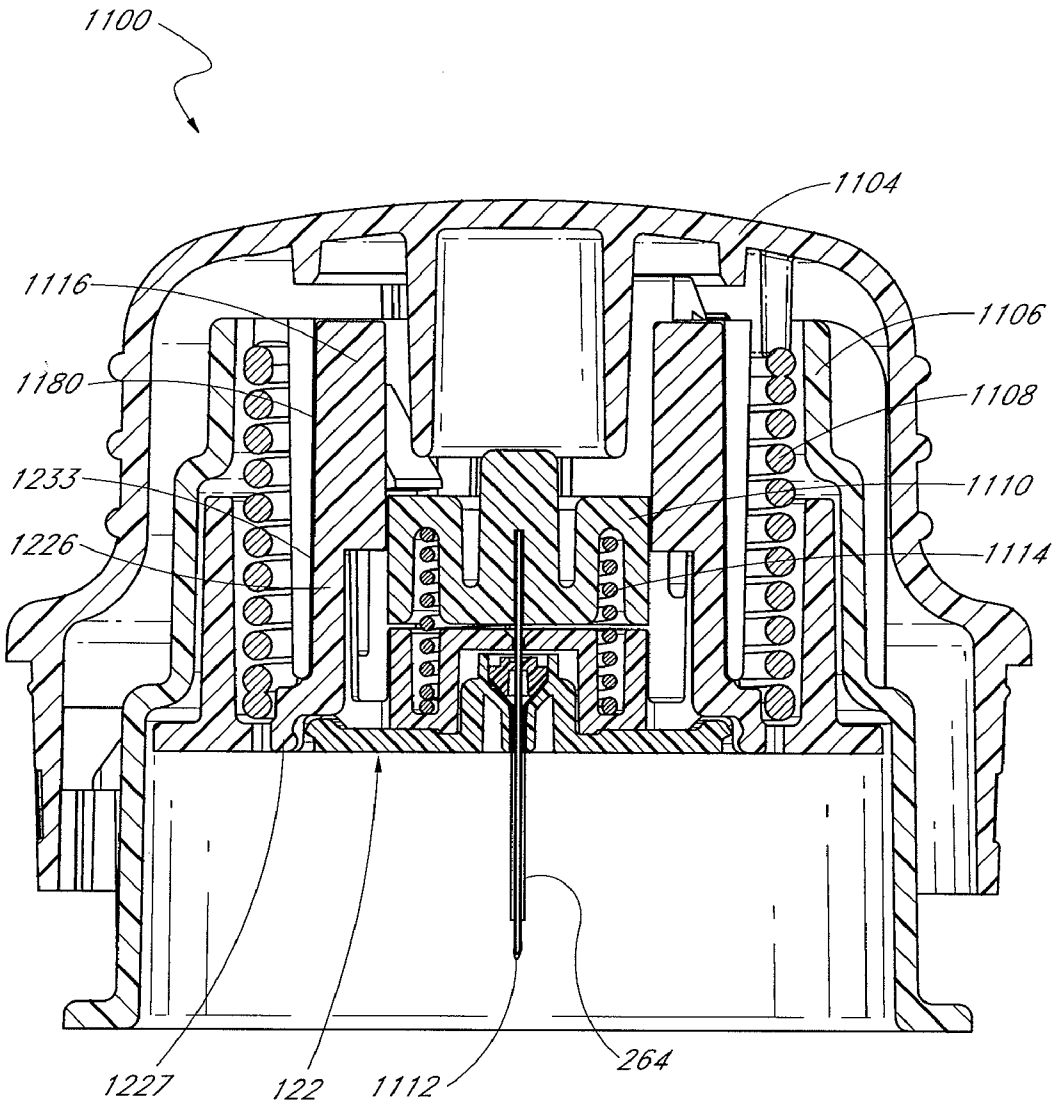
1100
1104
1116
1106
1180
1108
1233
1110
1226
1114
1227
122
1112
264

FIG. 29

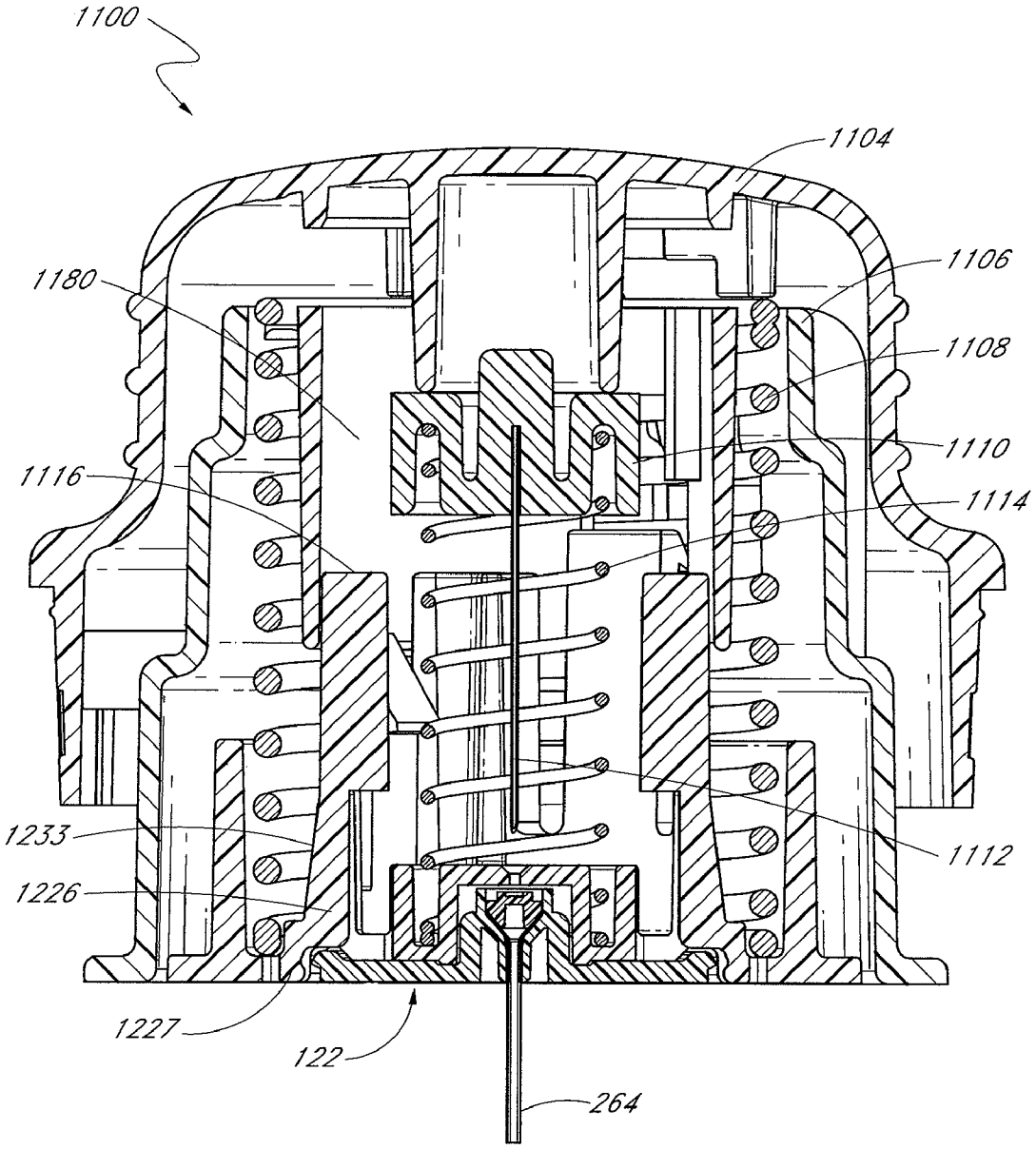
1100
1104
1106
1180
1108
1110
1116
1114
1233
1112
1226
1227
122
264

FIG. 30

INSERTION DEVICES FOR INFUSION DEVICES

RELATED APPLICATIONS

[0001] This application claims the benefit under 35 U.S.C. § 119(e) of U.S. Provisional Application No. 60/973,134, filed Sep. 17, 2007, titled INSERTION DEVICE FOR AN INFUSION SET, and U.S. Provisional Application No. 61/042,232, filed Apr. 3, 2008, titled INSERTION DEVICE FOR AN INFUSION SET. The entire contents of each of these applications are hereby incorporated by reference herein and made a part of this specification.

BACKGROUND

[0002] 1. Field

[0003] The present disclosure relates to devices that facilitate insertion of infusion devices, such as infusion sets, into a subject, and more particularly devices for inserting infusion devices at least partially into a person's skin.

[0004] 2. Description of the Related Art

[0005] Subcutaneous injection is a standard method for the delivery of medication into a patient's body. To facilitate frequent or continuous subcutaneous injection of medication, subcutaneous injection ports are often used. Such injection ports include a component that extends through the skin and may remain in place for several days. Currently, a major application of such injection ports is to provide continuous delivery of medication, such as insulin, from portable pumps carried with the patient.

[0006] Subcutaneous injection ports generally require a sharp, rigid needle to pierce the person's skin when initially attached to the person. In many cases the needle is withdrawn and a soft plastic cannula remains inside the body for an extended period. In other cases, the rigid needle can be hollow and remain in the patient to deliver medication.

[0007] Subcutaneous injection ports are sometimes inserted into the skin using an insertion device.

SUMMARY OF THE DISCLOSURE

[0008] Prior insertion devices do not adequately address the needs of users. Some users may suffer from conditions, such as diabetic neuropathy. It can be advantageous for an insertion device for an infusion device to be easily grasped and operated by diabetics suffering from diabetic neuropathy. Diabetic neuropathy can cause numbness, loss of feeling and muscle weakness in the hands and fingers making fine motor control difficult. At times, a user may need to insert an infusion device at a location on the user's body which may complicate insertion, e.g., on a user's side or back. In some instances, an adult may need to assist a child in placing an infusion device on the child's body. In these instances and others, it can be beneficial for an insertion device for an infusion device to require a minimum number of operational steps while providing safe operation and disposal. Such an insertion device may advantageously minimize the possibility of accidental needle sticks and/or premature activation of the insertion device. Accordingly, it can be advantageous for an insertion device to insert an infusion device, such as an infusion set, quickly, safely, and conveniently.

[0009] Thus, in accordance with at least one of the embodiments disclosed herein, a device for inserting an infusion device through skin for subcutaneous infusion comprises a sleeve, a shuttle, at least a first biasing member, a hub, a needle, at least a second biasing member, and an actuator.

[0010] The sleeve can have an upper surface and a lower surface. The lower surface of the sleeve can be configured to engage skin.

[0011] The shuttle can comprise a receptacle for accommodating an infusion device, at least a first movement-restraining arm, and a least a first hub-retaining arm. The shuttle can be movable between a retracted position and an advanced position. The first movement-restraining arm can engage the upper surface of the sleeve when the shuttle is in the retracted position to inhibit movement of the shuttle toward the advanced position. The first biasing member can be operatively connected to the shuttle to urge the shuttle toward the advanced position.

[0012] The hub can have an upper side and a lower side. The hub can be movable between a first position and a second position with respect to the shuttle. The first hub-retaining arm of the shuttle can inhibit movement of the hub away from the shuttle when the hub is in the first position.

[0013] The needle can have an upper end and a lower end. The upper end can be fixedly attached to the lower side of the hub. The lower end can be configured to pierce skin. The lower end of the needle can extend below the lower surface of the sleeve when the shuttle is in the advanced position and the hub is in the first position. The lower end of the needle can be positioned above the lower surface of the sleeve when the hub is in the second position. The second biasing member can be operatively connected to the hub to urge the hub upwardly from the shuttle away from the lower surface of the sleeve.

[0014] The actuator can be movably attached to the sleeve such that, when the first movement-restraining arm is engaged with the upper surface, advancement of the actuator toward the sleeve permits disengagement the first movement-restraining arm of the shuttle from the upper surface of the sleeve. Disengagement of the first movement-restraining arm of the shuttle from the upper surface of the sleeve can allow the first biasing member to move the shuttle from the retracted position to the advanced position. Movement of the shuttle from the retracted position to the advanced position can allow the first hub-retaining arm of the shuttle to release the hub such that the second biasing member moves the hub from the first position to the second position.

[0015] In accordance with at least one of the embodiments disclosed herein, an inserter for placing an infusion device at least partially into skin can comprise a sleeve, a carriage, at least at first biasing member, a hub, a needle, at least a second biasing member, and an actuator.

[0016] The sleeve can have a bottom surface. The bottom surface can be configured to engage skin.

[0017] The carriage can carry the infusion device. The carriage can be positioned at least partially within the sleeve. The carriage can be movable between a retracted position and an advanced position. The lowest portion of the infusion device can be spaced upwardly from the bottom surface of the sleeve when the carriage is in the retracted position. The bottom portion of the infusion device can extend below the lower surface of the sleeve when the carriage is in the advanced position. The first biasing member can be operatively connected to the carriage to urge the carriage toward the advanced position

[0018] The hub can be movable between a first position and a second position with respect to the carriage. The needle can have an upper end and a lower end. The upper end can be

fixedly attached to the lower side of the hub. The lower end can be configured to pierce skin. The needle can extend below the carriage when the hub is in the first position. The lower end of the needle can extend no lower than the carriage when the hub is in the second position. The second biasing member can be operatively connected to the hub to urge the hub upwardly from the carriage away from the lower surface of the sleeve.

[0019] The actuator can be operatively connected to the sleeve to cause the first biasing member to move the carriage from the retracted position to the advanced position. Movement of the carriage from the retracted position toward the advanced position permits the hub to move from the first position to the second position.

[0020] In accordance with at least one of the embodiments disclosed herein, an inserter for placing an infusion device at least partially into skin can comprise a housing, I carriage, at least at first biasing member, and an actuator.

[0021] The housing can have a bottom surface. The bottom surface can be configured to engage skin.

[0022] The carriage can be configured to carry an infusion device. The carriage can be positioned at least partially within the housing. The carriage can be movable between a retracted position and an advanced position. The lowest portion of the infusion device can be spaced upwardly from the bottom surface of the housing when the carriage is in the retracted position. The bottom portion of the infusion device can extend below the lower surface of the housing when the carriage is in the advanced position. The carriage can comprise at least one movable member for engaging the infusion device to inhibit release of the infusion device from the carriage before the carriage moves from the retracted position toward the advanced position. The first biasing member can be operatively connected to the carriage to urge the carriage toward the advanced position.

[0023] The actuator can be operatively connected to the housing to cause the first biasing member to move the carriage from the retracted position to the advanced position. Movement of the carriage from the retracted position toward the advanced position can cause the hub to move from the first position to the second position.

[0024] These and other embodiments of the present invention will become readily apparent to those skilled in the art from the following detailed description of the preferred embodiments having reference to the attached figures, the invention not being limited to any particular preferred embodiment(s) disclosed.

[0025] Neither this summary nor the following detailed description purports to define the invention. The invention is defined by the claims.

BRIEF DESCRIPTION OF THE DRAWINGS

[0026] Specific embodiments will now be described with reference to the drawings, which are intended to illustrate and not limit the various features of the invention.

[0027] FIG. **1** is an exploded perspective view of an insertion device and an insertion set according to one embodiment.

[0028] FIG. **2** is an assembled perspective view of the insertion device of FIG. **1**.

[0029] FIG. **3** illustrates a protective cap removed from an actuator of the insertion device of FIG. **1**.

[0030] FIG. **4** is a side view of the actuator of the insertion device of FIG. **1**.

[0031] FIG. **5** is a lower perspective view of the actuator of FIG. **5**.

[0032] FIG. **6** is an upper perspective view of the sleeve of the insertion device of FIG. **1**.

[0033] FIG. **7** is a lower perspective view of the sleeve of FIG. **6**.

[0034] FIG. **8** is a lower perspective view of a needle and needle hub of the insertion device of FIG. **1**.

[0035] FIG. **9** is an upper perspective view of a shuttle of the insertion device of FIG. **1**.

[0036] FIG. **10** is a cross-sectional view of the shuttle of FIG. **9**, taken along line **10-10** shown in FIG. **9**.

[0037] FIG. **11** is a cross-sectional view of the shuttle of FIGS. **9** and **10**, taken along line **11-11** shown in FIG. **9**.

[0038] FIG. **12** is an upper perspective view of a protective cap for use with an insertion device.

[0039] FIG. **13** is an upper perspective view of the protective cap of FIG. **12**, showing a portion of an infusion device accommodated therein.

[0040] FIG. **14** is a cross-sectional view of the insertion device of FIG. **1** before actuation, taken along line **14-14** shown in FIG. **3**.

[0041] FIG. **15** is another cross-sectional view of the insertion device in FIG. **1** before actuation, taken along line **15-15** shown in FIG. **14**.

[0042] FIG. **16** is a cross-sectional view, similar to FIG. **15**, of the insertion device of FIG. **1** after actuation.

[0043] FIG. **17** is another cross-sectional view, similar to FIG. **14**, of the insertion device of FIG. **1** after actuation.

[0044] FIG. **18** is an exploded perspective view of an insertion device and an insertion set according to one embodiment.

[0045] FIG. **19** is an assembled perspective view of the insertion device of FIG. **18**.

[0046] FIG. **20** is a perspective view of an actuator of the insertion device of FIG. **18**.

[0047] FIG. **21** is a lower perspective view of the actuator of FIG. **20**.

[0048] FIG. **22** is an upper perspective view of a sleeve of the insertion device of FIG. **18**.

[0049] FIG. **23** is a lower perspective view of the sleeve of FIG. **22**.

[0050] FIG. **24** is an upper perspective view of a needle hub of the insertion device of FIG. **18**.

[0051] FIG. **25** is an upper perspective view of the shuttle of the insertion device of FIG. **18**.

[0052] FIG. **26** is a lower perspective view of the shuttle of FIG. **25**.

[0053] FIG. **27** is a cross-sectional view of the shuttle of FIGS. **25** and **26**, taken along line **27-27** shown in FIG. **25**.

[0054] FIG. **28** is another cross-sectional view of the shuttle of FIGS. **25** and **26**, taken along the line **28-28**, shown in FIG. **25**.

[0055] FIG. **29** is a cross-sectional view, similar to FIG. **27**, of the insertion device of FIG. **18** before actuation.

[0056] FIG. **30** is a cross-sectional view, similar to FIGS. **27** and **29**, of the insertion device of FIG. **18** after actuation.

DETAILED DESCRIPTION OF SPECIFIC EMBODIMENTS

[0057] FIG. **1** illustrates an embodiment of an insertion device **100** for an infusion device **102**, such as infusion set. Further details regarding some exemplifying infusion devices, including infusion sets, are provided in United States Patent Application Publication Nos. 2005/0107743 and 2007/

0185441, both of which are hereby incorporated by reference herein in their entireties. There are many different types of infusion devices, such as infusion sets, that may be inserted using insertion devices, and the foregoing publications are provided merely to illustrate some infusion devices that can be used with or adapted to be used with the insertion devices described herein.

[0058] Referring to FIG. **1**, the insertion device **100** can comprise an actuator **104**, a sleeve **106**, an insertion spring **108**, a needle hub **110**, a needle **112**, a retraction spring **114**, a shuttle or carriage **116**, a protective cap **118**, and a cover **120**. The infusion device **102** can be an infusion set, and can comprise a base **122** and a tubing set **124**. The base **122** can comprise a soft cannula **264** and an adhesive sheet **266**. The tubing set can comprise an infusion cap **240**, a length of tubing **250**, and a connector **254** (see FIG. **13**). In some embodiments, the infusion device **102** can be packaged within the insertion device **100**.

[0059] FIG. **2** illustrates the insertion device **100** in an assembled state with the protective cap **118** engaged with the actuator **104**. The protective cap **118** can be removed from the actuator **104**, as shown in FIG. **3**, in preparation for insertion of the base **122**. In some embodiments, the insertion device **100** may omit the cap **118**.

[0060] Referring to FIG. **4**, the actuator **104** can include one or more gripping surfaces **126**, one or more pushing surfaces **130**, one or more arms **134** having feet **136**, and a coupling region **140**. In some embodiments, the actuator **104** can be made of a rigid plastic, such as ABS (acrylonitrile butadiene styrene), polycarbonate, polyethylene, or PET (polyethylene terephthalate).

[0061] The gripping surface **126** can extend entirely or partially around the circumference of the actuator **104** or may alternatively be located on opposite sides of the actuator **104** or otherwise spaced on the actuator **104**. The gripping surface **126** preferably has a dimension, such as an external diameter, that is sufficiently large to facilitate easy grasping by diabetics who have lost dexterity and strength due to diabetic neuropathy. In embodiments having multiple gripping surfaces **126**, the gripping surfaces can be spaced apart by a distance for facilitate easy grasping. The gripping surface(s) **126** can also have sufficient surface area and be positioned to allow a user to hold the actuator **104** at the gripping surface(s) **126** using the middle section of a user's fingers and/or palm.

[0062] In some embodiments, the gripping surface **126** can include a plurality of ridges or other surface elements **128**. Surface elements **128** can increase friction or interface between a user's fingers and the actuator **104** to improve the user's ability to securely hold the actuator **104**. For example, the surface elements **128** can comprise one or more of texturing, dimples, bumps, grooves, or other surface shapes. The surface elements **128** can be integrally formed with one or more other portions of the actuator **104**, or may be separately formed and attached by mechanical coupling, such as by interference fit, or by any known bonding technique, such as adhesives.

[0063] The pushing surfaces **130**, **132** of the actuator **104** can comprise one or more upper pushing surfaces **130** and/or one or more lower pushing surfaces **132** that can be sized and positioned to be contacted by a user's fingers and/or palm. For example, the upper pushing surface **130** can be configured to be contacted primarily by a user's palm, while lower pushing surfaces **132** can be configured to be contacted primarily by a user's fingers. In the embodiment of the actuator **104** that is illustrated in FIG. **4**, the upper pushing surface **130** is generally convexly domed and the lower pushing surface **132** is generally concave.

[0064] With continued reference to FIG. **4**, the actuator can comprise one or more arms **134** which can have feet **136**. The feet **136** may be located at or near a terminal end of arms **134**. The feet can include a cam surface **138** and may face outwardly, as illustrated in FIG. **4**, inwardly or circumferentially or in other directions. In some embodiments, the actuator **104** may omit the arms, feet, and cam surfaces. In some embodiments, the actuator **104** can comprise other features.

[0065] The coupling region **140** may facilitate secure attachment of the actuator **104** with the protective cap **118** (see FIGS. **1** and **2**). The coupling region **140** can comprise a groove **142** which can securely engage a complementary structure of the protective cap **118**, while also allowing easy removal of the protective cap **118** from the actuator **104**. In some embodiments, the coupling region **140** can additionally or alternatively comprise a ridge which can securely engage a complementary structure of the protective cap **118**, while also allowing easy removal of the protective cap **118** from the actuator **104**.

[0066] Referring to FIG. **5**, the actuator **104** can comprise a number of features in an interior of the actuator **104**. For example, the actuator **104** can comprise one or more displacement members **144**, one or more guideposts **148**, and a travel-limiting member **152**. Some or all of the displacement members **144**, the guideposts **148**, and the travel-limiting member **152** can extend downwardly from the underside of the actuator **104**. The displacement member **144** can include an engagement surface **146**. One or more of the guideposts **148** may include a stop surface **150**. The travel-limiting member **152** may be cylindrical, or may have other configurations, such as square, triangular, frustoconical, or actuate.

[0067] Referring to FIG. **6**, the sleeve **106** can comprise an upper surface **154**. The upper surface **154** can include one or more apertures **156** that are sized and positioned to cooperate with the guideposts **148** of the actuator **104**. Alternatively, the apertures **156** can be formed in a surface of the sleeve other than the upper surface **154**. In some embodiments, the apertures **156** can comprise recesses formed in the sleeve **106**, such as in the upper surface **154**, in a side surface, or both.

[0068] The sleeve **106** can comprise one or more external guide rails **158** and/or one or more internal guide rails **160**. The external guide rails **158** are preferably sized and configured to cooperate with one or more interior surfaces of the actuator **104**, such as interior surface **260** (see FIG. **5**). For example, the external guide rails **158** can slidingly engage the interior surface **260** of the actuator **104** to cause the actuator **104** and the sleeve **106** to move along a generally straight path with respect to one another. The external guide rails **158** can additionally or alternatively cooperate with one or more interior surfaces of the actuator **104** to allow the cap **104** and the sleeve **106** to rotate with respect to each other. The external guide rails **158** may extend generally linearly (e.g., straight), as shown in FIG. **6**, though the external guide rails **158** may also have other configurations.

[0069] The internal guide rails **160** can be sized and configured to cooperate with appropriate structures of the shuttle **116**, discussed below. The internal guide rails **160** can extend longitudinally, as shown on FIG. **6**, or may have other configurations. In some embodiments, the internal guide rails **160** are arranged in pairs to define a channel therebetween.

[0070] With continued reference to FIG. **6**, the sleeve **106** can also comprise a recess **168**. The recess **168** can permit one or more portions of the infusion device **102** to extend therethrough (see FIGS. **14** and **17**).

[0071] Referring again to FIG. **6**, the sleeve **106** can comprise one or more apertures **166** that can be used to facilitate molding internal features of the sleeve **106**.

[0072] The sleeve **106** can also comprise a stop ledge **262**, the purpose of which is described further below in connection with FIGS. **14-17**.

[0073] The sleeve **106** can comprise one or more apertures **162** that are configured to permit the arms **134** of the actuator **104** (see FIG. **4**) to extend therethrough. The aperture **162** can have a width that allows the arm **134** to move within the aperture **162** as the actuator **104** is rotated with respect to sleeve **106** between a locked position and an unlocked position. When such embodiments are in the locked position, the stop surfaces **150** of the actuator **104** can be positioned over the upper surface **154** of the sleeve **106** to prevent movement of the actuator **104** relative to the sleeve **106** toward the skin. When such embodiments are in the unlocked position, the stop surfaces **150** are aligned with the apertures **156** such that the guideposts, including the stop surfaces, are allowed to advance through the apertures **156**. The sleeve **106** can also comprise indicia **164** to indicate whether the actuator **104** and sleeve **106** are in the unlocked or locked position.

[0074] Referring to FIG. **7**, the sleeve **106** can comprise a recess **170** in which the one or more feet **136** of the actuator **134** may move. The recess **170** can be bounded on one side by a shoulder **172** that is configured to engage the one or more feet **136** of the actuator **104**. The shoulder **172** can comprise a protrusion **174** to prevent unintentional rotation of the actuator **104** with respect to sleeve **106** between the locked position and the unlocked position. The protrusion **174** can also provide tactile feedback to a user when the actuator **104** is moved with respect to the sleeve **106** between the locked position and the unlocked position.

[0075] The sleeve **106** can also comprise a lower surface **176**. The lower surface **176** can be configured to provide stable contact with a person's skin during placement of the base **122** of the infusion device **102** into the person's skin. The lower surface **176** can be continuous, as illustrated in FIG. **7**, or segmented.

[0076] In some embodiments, the sleeve **106** can comprise a recess **178** (see, e.g., FIGS. **15** and **16**) to receive all or a portion of the insertion spring **108** therein.

[0077] With continued reference to FIG. **7**, in some embodiments, the sleeve **106** can comprise a cam surface **180**. The cam surface **180** can be cylindrical, as illustrated in FIG. **7**, or have other configurations. For example, the cam surface **180** can have a generally circular cross-section, as illustrated in FIG. **7**, or can have other cross-sectional shapes such as polygonal. The cam surface **180** can form a closed loop as shown in FIG. **7**, or may not form a closed loop, but instead comprise one or more longitudinal cam surfaces.

[0078] In some embodiments, the sleeve **106** can be made of a rigid plastic, such as ABS, polycarbonate, polyethylene, or PET.

[0079] Referring to FIG. **8**, the needle hub **110** can comprise an upper side **182** and a lower side **184**. The lower side **184** can comprise a needle-mounting aperture **186** and a recess **188**. The recess **188** can be configured to receive all or a portion of the retraction spring **114** (see FIGS. **1** and **14-17**). The needle hub can also include one or more engagement surfaces **190** and a follower surface **192**. In some embodiments, the needle hub **110** can be made of a rigid plastic, such as ABS, polycarbonate, polyethylene, or PET.

[0080] The needle **112** can be inserted into and fixed within the needle-mounting aperture **186** of the needle hub **110**. The needle **112** can be fixed to the needle hub **110** by any suitable adhesive, such as a solvent adhesive. The needle **112** can include a beveled end **194**. In some embodiments, the needle **112** can be made of a suitable metal, such as stainless steel.

[0081] Referring to FIGS. **9-11**, the shuttle **116** can include recesses **202** that are configured to receive at least a portion of the insertion spring **108** (see FIGS. **14-17**). The insertion spring **108** can engage the sleeve **106**, and the insertion spring **108** can bias the shuttle **116** from the sleeve **106**. The guideposts **148** can extend through the apertures **156** in the sleeve **106** (FIG. **6**), and the insertion spring can engage the guideposts **148** to bias the actuator from the shuttle **116** (see FIGS. **14-15**).

[0082] The shuttle **116** can include one or more sleeve-engaging arms **196**, each having a sleeve-engaging foot **198**. The sleeve-engaging arms **196** of the shuttle **116** can be biased so that the sleeve-engaging feet **198** rest upon the upper surface **154** of the sleeve **106** to maintaining the insertion spring **108** in a compressed state (see FIG. **14**).

[0083] The sleeve-engaging feet **198** and upper surface **154** are preferably configured to align with the displacement member **144** of the actuator **144** so that the engagement surface **146** of the displacement member **144** aligns with cam surfaces **200** of the sleeve-engaging feet **198**. Thus, movement of the displacement member **144** against the feet **198** can cause the feet **198** to disengage from the upper surface **154** of the sleeve **106**. The cam surfaces **200** of the sleeve-engaging feet **198** can be beveled, as shown in FIGS. **9-10** and **14**, or alternatively the engagement surface **146** can be beveled.

[0084] The shuttle **116** can be configured to accommodate the needle hub **110** and needle **112**. For example, the shuttle **116** can comprise one or more cam surfaces **204** configured to cooperate with the follower surface **192** of the needle hub **110** to orient the needle hub **110** while permitting sliding movement of the needle hub **110** relative to the shuttle **116**. The shuttle **116** can also comprise a needle aperture **206** to permit the needle **110** to extend therethrough.

[0085] Referring to FIG. **11**, the shuttle **116** can comprise one or more recesses **208** to receive at least a portion of the retraction spring **114**. The retraction spring also can engage the needle hub **110**, at the recess **188** for example, and the retraction spring **114** can bias the needle hub **110** from the shuttle **116** (see FIGS. **14-17**).

[0086] With continued reference to FIGS. **9-11**, the shuttle **116** can include one or more needle-hub-engaging arms **210**, each having a needle-hub-engaging foot **212**. The needle-hub-engaging arms **210** can be biased away from the needle hub **110** to allow the needle hub **110** to move freely along the guide surfaces **204**. The needle hub **110** can be forced toward the shuttle **116** to compress the retraction spring **114** (see FIGS. **14** and **15**). The needle-hub-engaging arms **210** can then be forced together so that the needle-hub-engaging feet **212** engage the upper side **182** of the needle hub **110** to restrict movement of the needle hub **110** away from the shuttle **116**. The needle-hub-engaging arms **210** can also comprise a follower surface **214** (see FIG. **11**) that cooperates with the cam surface **180** of the sleeve **106** to prevent the needle-hub-

engaging arms **210** from spreading apart to release the needle hub **210** (see FIGS. **15** and **16**).

[0087] Referring to FIG. **9**, the shuttle **116** can comprise guide surfaces **216** that are sized in positioned to cooperate with the can surface **180** of the sleeve **106** to orient of the shuttle **116** relative to the sleeve **106** as the shuttle **116** moves away from the sleeve **106** under the force of the insertion spring **108**.

[0088] Referring to FIG. **11**, the shuttle **116** can comprise slots **218** that are sized and configured to cooperate with internal guide rails **160** of the sleeve **106** to inhibit or prevent rotation of the shuttle **116** relative to the sleeve **106** and guide the movement of the sleeve-engaging arms **196** and sleeve-engaging feet **198**.

[0089] Referring to FIGS. **10** and **11**, the shuttle **116** can comprise a recess **220** to receive at least a portion of an infusion device **102**. The recess **220** can be positioned such that the needle **112** extends through the needle apertures **206** and through the cannula **264** of the base **122**. The shuttle **116** can also comprise additional surfaces such as surfaces **222** and **224**, to engage the infusion device **102**.

[0090] The shuttle **116** can comprise one or more base-retaining arms **226**. In some embodiments, the base-retaining arms **226** can extend into the recess **220** to engage the infusion device **102**. The arms **226** can include set-engagement surfaces **228** that may include features, such as ribs **230**, to frictionally engage the base **122**. The set-engagement surfaces **228** can be substantially flat or in other embodiments can be concave or have other shapes. The arms **226** can include surfaces **232** positioned for engagement by the needle hub **110** to force the set-engagement surfaces **228** into contact with the infusion device **102** to prevent the infusion device **102** from unintentional disengagement from the shuttle **116**. When the needle-hub-engaging arms **210** of the shuttle **116** hold the needle hub **110** to maintain compression of the retraction spring **114**, the engagement surface **190** of the needle hub **110** can press against the engagement surfaces **232** to move the arms **226** and thereby squeeze the infusion device **102** between the set-engagement surfaces **228** within the recess **220**.

[0091] In some embodiments, the shuttle **116** can be made of a rigid plastic, such as ABS, polycarbonate, polyethylene, or PET. Nonetheless, it can be advantageous for the material from which the shuttle **116** is made to have sufficient memory to properly function as described herein.

[0092] Referring to FIGS. **12** and **13**, the protective cap **118** can comprise a cylindrical wall **234** of sufficiently large width, diameter, or length, to accommodate therein the tubing set **124** as illustrated in FIG. **13**. The protective cap **118** can include a plurality of apertures **236** to facilitate the sterilization of the insertion device **100** and/or the infusion device **102**.

[0093] The cover **120** (see FIGS. **1-3**) can be applied to the protective cap **118** to cover the apertures **236** before or after sterilization of the insertion device **100** and/or the infusion device **102**. In some embodiments, the cover **120** can be made of DuPont Tyvek® or other suitable material.

[0094] In some embodiments, the protective cap **118** can comprise one or more structures to receive and retain the tubing set **124** of the infusion device **102**. The protective cap **118** can comprise one or more receiving structures **238** to receive the infusion cap **240** and one or more arms **242** having feet **244** to hold the infusion cap **240** securely within the protective cap **118**.

[0095] The protective cap **118** can include a plurality of arms **246** having feet **248** that are configured to hold the length of tubing **250**. One of the arms **246** can also comprise a recess **252** to receive the connector **254**. The protective cap **118** can comprise a recess **256** to receive a portion of the connector **254** so that the connector **254** can be held securely between the recess **256** and the arm **246** that includes the recess **252**.

[0096] The protective cap **118** can comprise a coupling region **258** configured to cooperate with the coupling region **140** of the actuator **104**.

[0097] In some embodiments, the protective cap **118** can be made of a rigid plastic or a semi-rigid plastic, such as ABS, polycarbonate, polyethylene, or PET. In some embodiments, it may be desirable for the actuator **104** and the protective cap **118** to be made of different materials. For example, the protective cap **118** can be made of a material that is less rigid than the material of the actuator **104** to facilitate operation of the coupling regions **120**, **258**. Additionally or alternatively, the protective cap **118** can be made of a clear material, such polycarbonate, to facilitate inspection of the infusion device **102** by a manufacturer or user, for example.

[0098] The protective cap **118** can advantageously be used for storage and transportation of the tubing set **124**. The protective cap **118** can also be used as a sterile environment for the infusion cap **240** while the connector **254** is connected to an infusion pump and the tubing set **124** is primed.

[0099] The actuator **104**, the sleeve **106**, the shuttle **116**, and the protective cap **118** can be made of any of a variety of plastics known to those of skill in the art, such as those identified above, or may alternatively be made of metal or other materials. The insertion spring **108** and the retraction spring **114** can be made of plastic, metal, rubber, or other materials. In some embodiments the insertion spring **108** and the retraction spring **114** can be made of steel, such as stainless steel or spring steel. The springs **108** and **114** may have configurations other than that of a helical spring.

[0100] The insertion device **100** and infusion device **102** can be packaged together and transported in the assembled state shown in FIG. **2**. A label (not shown) may be applied to the side of the protective cap **118** and the actuator **104** to provide instructions to the user and provide a tamper-evident seal to the insertion device **100**. The label could be positioned so that the user would need to tear the label before removing the protective cap **118** from the actuator **104**, as shown in FIG. **3**.

[0101] Once the protective cap **118** is removed from the actuator **104**, the connector **254** and some or all of the length of tubing **250** are removed from the protective cap **118**. The connector **254** is connected to an infusion pump and then the tubing set **124** is primed. The infusion cap **240** is kept within the protective cap **118** to preserve the sterility of the infusion cap **240**.

[0102] After preparing an injection site on the patient's skin, the user removes protective paper backing, if any, from the adhesive of the base **122**. The sleeve **106** is then rotated relative to the actuator **104** from the locked position to the unlocked position and the lower surface **176** of the sleeve **106** is placed on the skin at the injection site.

[0103] The actuator **104** can be advanced toward the skin with the external guide rails **158**, if present, of the sleeve **106** guiding the actuator **104** as it is advanced. Advancement of the actuator **104** toward the sleeve **106** can disengage or permit disengagement the sleeve-engaging feet **198** of the

shuttle **116** from the upper surface **154** of the sleeve **106**. For example, referring to FIGS. **14** and **15**, the actuator **104** compresses the insertion spring **108** until the engagement surface **146** of the displacement member **144** of the actuator **104** presses against the cam surfaces **200** of the sleeve-engaging feet **198** of the shuttle **116** to force the sleeve-engaging feet **198** off of the upper surface **154** of the sleeve **106** to allow the shuttle **116** to advance within the sleeve **106**. The orientation of the shuttle **116** within the sleeve **106** can be preserved as the shuttle **116** advances by cooperation of the internal guide rails **160** in cooperation with the slots **218** of the shuttle **116**. Advancement of the shuttle **116** within sleeve **106** can be limited by the engagement of the sleeve-engaging feet **198** against the stop ledge **262** of the sleeve **106** (see FIG. **17**).

[0104] Movement of the shuttle **116** from a retracted position toward an advanced position can permit or can cause the hub **110** to move away from the hub **110**. For example, as the shuttle **160** approaches or arrives at the end of its range of travel within the sleeve **106**, the needle-hub-engaging arms **210** can clear the cam surface **180** of the sleeve **106** to allow the needle-hub-engaging arms **210** to move away from the needle hub **110**. Once the needle hub **110** is released by the needle-hub-engaging arms **210**, the retraction spring **114** can push the needle hub **110** away from the shuttle **116** to draw the needle **112** within the insertion device **100**, as illustrated in FIGS. **16** and **17**. The guide surfaces **204** of the shuttle **116** can orient the needle hub **110** as it moves away from the shuttle **116** so that the needle **112** is withdrawn substantially linearly (e.g., straightly) from the skin. Thus, the needle **112** can be protected both before and after insertion of the base **122** to prevent accidental needle sticks. This automatic retraction feature can ensure that the needle **212** is only exposed while the infusion device **102** is being inserted. In some embodiments, the insertion device **100** can be configured to be used only a single time such that the insertion device **100** can be discarded with the needle safely retained therein.

[0105] The surfaces **222** and **224** of the shuttle **116** can press the base **122** against the skin. Additionally or alternatively, the surfaces **222** and **224** can inhibit movement of the infusion device **102** away from the skin as the needle **112** is retracted. In embodiments comprising arms **226** (see FIG. **10**), once the needle hub **110** moves away from the shuttle **116**, pressure can be released from the engagement surface **232** of the arms **226** releasing the set-engagement surfaces **228** from the base **122** so that the base **122** is released from the shuttle **116**.

[0106] The user may maintain pressure against the cap **104** so that the surfaces **222** and **224** of the shuttle **116** hold a portion of the infusion device **102**, such as the base **122**, against the skin to ensure good adhesion between the infusion device **102** and the skin. Thereafter, the user may lift the insertion device **100** away from the skin leaving the infusion device **102** against the skin with the cannula extending through the skin.

[0107] Once the insertion device **100** is removed from the skin, the protective cap **118** can be engaged with the actuator **104** for safe disposal of the needle **112** within the insertion device **100**. However, in some embodiments, the insertion device **100** can be safely disposed with the needle **112** retracted into the insertion device **100** even if the protective cap **118** is omitted or not engaged with the actuator **104**.

[0108] In some embodiments, the insertion device **100** can be used to insert an infusion set **102** having a rigid infusion cannula **264**, such as those described in United States Patent Application Publication No. 2007/0185441, which is hereby incorporated by reference herein in its entirety. Such embodiments of the insertion device **100** may omit the needle **112** if the infusion cannula **264** has sufficient rigidity to pierce skin.

[0109] FIG. **18** illustrates an embodiment of an insertion device **1100** for an infusion device, such as the infusion device **102**. The insertion device **1100** is similar in many respects to the insertion device **100**. Therefore, similar components of the insertion device **1100** are referenced by the same reference numeral as the corresponding component in the insertion device **100** incremented by one thousand. As with the insertion device **100**, the insertion device **1100** can comprise an actuator **1104**, a sleeve **1106**, an insertion spring **1108**, a needle hub **1110**, a needle **1112**, a retraction spring **1114**, a shuttle **1116**, a protective cap **1118**, and a cover **1120**. In some embodiments, the infusion device **102** can be packaged within the insertion device **1100**.

[0110] The insertion device **1100** can differ from the insertion device **100** in some respects. For example, the actuator **1104** can comprise one or more projections **1107**, illustrated in FIGS. **19** and **20**. The projections **1107** can extend generally away from one or more gripping surfaces **1126**, one or more pushing surfaces **1130**, or a combination thereof. The projections **1107** can be spaced substantially evenly around the actuator **1104** or can be otherwise spaced on the actuator **1104**. The gripping surfaces **1126** can extend between the projections **1107**.

[0111] The projections **1107** can provide one or more advantages. For example, the projections may aid in the removal of a protective wrapping, covering, or other seal or temper-evidencing feature. Insertion devices can be distributed to end-users in a sealed configuration to maintain the insertion devices in a sterile condition. In some embodiments, sterility can be maintained by distributing the insertion device **100**, **1100** in an assembled state (FIGS. **3** and **19**) and by substantially sealing the coupling region **140**, **1140** between the actuator **104**, **1104** and the protective cap **118**, **1118**. In some embodiments, the coupling region **1140** can be wrapped with a layer of plastic or cellophane shrink-wrapping, or a shrink-wrapping formed from any other suitable material. While placing the layer of shrink-wrapping, covering, or other seal or temper-evidencing feature across the coupling region **1140** may help to maintain sterility and can indicate whether tampering has occurred, the removal of such layer may be difficult for some users, particularly for those suffering from diabetic neuropathy because of the associated loss of dexterity. In some embodiments, the projections **1107** can comprise one or more surfaces **1105**, as shown in FIG. **19**, to facilitate removal of the shrink-wrapping, covering, or other seal or temper-evidencing feature from the coupling region **1140**. For example, the shrink-wrapping could be removed by rubbing the surface **1105** against another object, creating a pressure on the shrink-wrapping sufficient to loosen, tear or otherwise remove the shrink wrapping. The surfaces **1105** may also provide a suitable location for provision of a tab, perforation, or other feature to aid a user in removing a protective wrapping, covering, or other seal or temper-evidencing feature. Additionally or alternatively, the projections **1107** may aid manipulation of the actuator **1104** during use or manufacturing by indicating the orientation of the actuator **1104**, providing additional surfaces or surfaces for gripping, or both.

[0112] As shown in FIG. **20**, the actuator **1104** can comprise one or more apertures **1163**. The actuator **1104** can

comprise indicia **1165** to indicate whether the actuator **1104** and the sleeve **1106** are in an unlocked position or a locked position.

[0113] With reference to FIG. **21**, an interior of the actuator **1104** may comprise one or more displacement members **1144**, one or more guideposts **1148**, one or more travel-limiting members **1152**, and one or more grooves or detents **1171**. In some embodiments, the detents can have configurations other than that of grooves. In some embodiments, such as the embodiment illustrated in FIG. **21**, the grooves **1171** can be positioned adjacent to the one or more apertures **1163**.

[0114] Referring to FIGS. **22** and **23**, the sleeve **1106** can comprise one or more arms **1135**. Each arm **1135** can comprise a foot **1137**. The feet **1137** can be located at a terminal end of the arms **1135**. Each foot can include a cam surface **1139**. The feet **1137** can face outwardly, as illustrated in FIGS. **22** and **23**, inwardly, circumferentially, or in other directions.

[0115] One or more of the arms **1135** can comprise a ridge **1175**. The ridge **1175** can be located centrally on an arm **1135** and can extend partially or entirely from a base of the arm to a terminal end, as shown in FIGS. **22** and **23**. In some embodiments, the ridge **1175** can be located close to an edge of the arm **1135**. While the ridges **1135** illustrated in FIGS. **22** and **23** are primarily straight with constant heights and widths along their lengths, in other embodiments the ridges can be curved or have a non-constant widths or heights. In some embodiments, the ridges can be circular and can resemble a single generally circular bump or a series of bump, or have other configurations.

[0116] Referring again to FIG. **20**, the one or more apertures **1163** of the actuator **1104** can be configured to permit a portion of one or more of the arms **1135**, the feet **1137**, the cam surfaces **1139**, and the ridges **1175** of the sleeve **1106** (see FIGS. **22** and **23**) to partially or fully extend through the apertures **1163**. The one or more apertures **1163** can have a width that allows a foot **1137** of the sleeve **1106** to move within the aperture **1163** as the actuator **1104** is rotated with respect to sleeve **1106** between the locked position and the unlocked position.

[0117] The grooves **1171** can be configured to accept the ridge **1175** of the arm **1135** when the foot **1137** fully or partially extends through the aperture **1163**. Rotation of the foot **1137** along with the arm **1135** relative to the aperture **1163** is accompanied by movement of the ridge **1175** relative to the grooves **1171**. In this manner, the locked position can be indicated by engagement of the ridge **1175** with one of the grooves **1171**, and the unlocked position can be indicated by engagement of the ridge **1175** with the other of grooves **1171**. Additionally or alternatively, the locked position can be indicated by proximity of the foot **1137** to one of the indicia **1165** on the actuator **1104** as viewed through one of the apertures **1163**.

[0118] In some embodiments, rotation of the arm **1135** relative to the aperture **1163** requires more force when the ridge **1175** is engaged with one of the grooves **1171**. Thus, unintentional rotation of the actuator **1104** with respect to the sleeve **1106** can be inhibited, which unintentional rotation may accidentally unlock the device. Engagement of the ridge **1175** and one of the grooves **1171** can also provide tactile feedback to the user when the actuator **1104** is moved between the locked position and the unlocked position.

[0119] In other embodiments, the arm **1135** can comprise one or more grooves and the actuator **1104** can comprise one or more ridges with the one or more grooves and the one or more ridges being configured to cooperate. Other configurations can also be used. For example, the arm **1135** can comprise one or more detents and the actuator **1104** can comprise one or more bumps with the one or more detents and the one or more bumps being configured to cooperate.

[0120] FIG. **24** illustrates the needle hub **1110**. In this embodiment, the needle hub **1110** comprises an upper side **1182**, a lower side **1184**, a cylindrical follower surface **1192**, and a protrusion **1183**. The protrusion **1183** can be positioned on the upper side **1182**, as illustrated in FIG. **24**, or can in other embodiments be located on the lower side **1184**. The protrusion **1183** may aid in assembling the insertion device **1100**. For example, it may facilitate proper orientation of the needle hub **1110** during assembly of the insertion device **1100**. Additionally or alternatively, the protrusion **1183** may act as a handle for manipulating and stabilizing the needle hub during assembly.

[0121] FIGS. **25-28** illustrate the shuttle **1116**. The shuttle **1116** can comprise one or more recesses **1202** that are configured to receive at least a portion of the insertion spring **1108**. The shuttle **1116** can comprise one or more sleeve-engaging arms **1196** each having a sleeve-engaging foot **1198**. The shuttle can comprise one or more cam surfaces **1204** configured to cooperate with the follower surface **1192** of the needle hub **1110** to orient the needle hub **1110** while permitting sliding movement of the needle hub **1110** relative to the shuttle **1116**. The shuttle **1116** can comprise one or more recesses **1208** to receive at least a portion of the retraction spring **1114**. The shuttle can comprise one or more needle-hub-engaging arms **1210**, each having a needle-hub-engaging foot **1212**.

[0122] The shuttle **116** can comprise a recess **1220** to receive at least a portion of an infusion device **102**, such as an infusion set. The recess **1220** can be positioned such that the needle **1112** extends through the needle aperture **1206** and through the cannula **264** of the base **122**. The shuttle **1116** can also comprise additional surfaces such as surfaces **1222** and **1224**, to engage the infusion device **102**.

[0123] In some embodiments, the shuttle **1116** can comprise one or more base-retaining arms **1226**, such as those illustrated in FIGS. **25-28**, to engage the infusion device **102**. In some embodiments, the base-retaining arms **1226** can be positioned in base-retaining arm recesses **1221**. The arms **1226** can include base-retaining feet **1227**, to clamp, grasp, or otherwise engage the base **122** and secure it to the shuttle **1116**. The base-retaining feet **1227** can be substantially flat or in other embodiments can be concave or have other shapes. The base-retaining arms **1226** can include sleeve-engagement surfaces **1233** positioned for engagement by the cam surface **1180** of the sleeve **1106** to urge the base-retaining feet **1227** toward the base **122** to impede unintentional disengagement of the infusion device **102** from the shuttle **1116**. In some embodiments, the base-retaining feet **1227** can be configured such that when the cam surface **1180** is engaged with the sleeve-engagement surfaces **1233**, the base-retaining feet **1227** extend beneath a bottom edge of the base **122**, thereby physically inhibiting separation of the infusion device **102** from the shuttle **1116**.

[0124] The insertion device **1100** can be used as follows. After preparing an injection site on the skin, the user can remove a protective paper backing, if any, from an adhesive of the base **122**. The sleeve **1106** can then be rotated relative to the actuator **1104** from the locked position to the unlocked

position and a lower surface **1176** of the sleeve **1106** can be placed on the skin at the injection site.

[0125] The actuator **1104** can be advanced toward the skin, with the external guide rails **1158** of the sleeve **1106** guiding the actuator **1104** as it is advanced. The actuator **1104** can compress the insertion spring **1108** until an engagement surface **1146** of the displacement member **1144** of the actuator **1104** presses against cam surfaces **1200** of the sleeve-engaging feet **1198** of the shuttle **1116** to force the sleeve-engaging feet **1198** off of an upper surface **1154** of the sleeve **1106** to allow the shuttle **1116** to advance within the sleeve **1106**. The orientation of the shuttle **1116** within the sleeve **1106** can be preserved as the shuttle **1116** advances by cooperation of internal guide rails **1160** in cooperation with slots **1218** of the shuttle **1116**. Advancement of the shuttle **1116** within sleeve **1106** can be limited by the engagement of the sleeve-engaging feet **1198** against one or more stop ledges **1262** of the sleeve **1106** (see FIG. **30**).

[0126] As the shuttle **1116** advances through the sleeve **1106**, the sleeve-engagement surfaces **1233** of the shuttle **1116** can advance downwardly relative to the cam surface **1180** of the sleeve **1106**. The base-retaining arms **1226** can spread outwardly when the sleeve-engagement surfaces **1233** of the shuttle **1116** clear the cam surface **1180** of the sleeve **1106**. The base-retaining feet **1227** can move away from the base **122** as the base-retaining arms **1126** spread outwardly such that the base **122** can be released from the shuttle **1116**.

[0127] As the shuttle **1116** approaches or arrives at the end of its range of travel within the sleeve **1106**, the needle-hub-engaging arms **1210** can clear the cam surface **1180** of the sleeve **1106** to allow the needle-hub-engaging arms **1210** to move away from the needle hub **1110**. Once the needle hub **1110** is released by the needle-hub-engaging arms **1210**, the retraction spring **1114** can push the needle hub **1110** away from the shuttle **1116** to draw the needle **1112** within the insertion device **1100**. The guide surfaces **1204** of the shuttle **1116** can orient the needle hub **1110** as it moves away from the shuttle **1116** so that the needle **1112** can be withdrawn substantially linearly (e.g., straightly) from the patient's skin. Thus, the needle **1112** can be protected both before and after insertion of the base **122** to prevent accidental needle sticks. This automatic retraction feature can ensure that the needle **1212** is only exposed while the infusion device **102** is being inserted.

[0128] Surfaces **1222** or **1224** of the shuttle **1116**, or both, can press the base **122** against the skin. The user may maintain pressure against the cap **104** so that the surfaces **1222** and **1224** of the shuttle **1116** can hold the base **122** against the skin to ensure good adhesion between the base **122** and the skin. Thereafter, the user may lift the insertion device **1100** away from the skin leaving the base **122** against the skin with the cannula extending through the skin.

[0129] Once the insertion device **1100** is removed from the skin, the protective cap **1118** can be engaged with the actuator **1104** for safe disposal of the needle **1112** within the insertion device **1100**.

[0130] In some embodiments, the insertion device **1100** can be used to insert an infusion device **102**, such as an infusion set, having a rigid infusion cannula **264**, such as those described in United States Patent Application Publication No. 2007/0185441, which is hereby incorporated by reference herein in its entirety. Such embodiments of the insertion device **1100** may omit the needle **1112** if the infusion cannula **264** has sufficient rigidity to pierce the skin. Additionally, in embodiments of the insertion device **1100** wherein movement of the needle hub **1110** within the insertion device **1100** does not affect securement of the base **122** of the infusion device **102** to the shuttle **1116**, the needle hub **1110** and the retraction spring **1114** may be omitted. If these components are omitted, corresponding simplifications to the structure of the shuttle **1116** may also be made. Other components, structures, or processes can be omitted in these and other embodiments.

[0131] The examples shown in the drawings of this application and described in the text are not intended to be limiting, but merely to illustrate various aspects of certain embodiments. Many other alternatives and configurations are possible, and are encompassed by this disclosure. Moreover, each of the components and features described herein with respect to each embodiment can be used in other embodiments of this disclosure to form additional embodiments not expressly illustrated or described. In addition, no component, structure, or process disclosed herein is indispensible or critical.

What is claimed is:

1. A device for inserting an infusion device through skin for subcutaneous infusion, comprising:

a sleeve having an upper surface and a lower surface, the lower surface being configured to engage skin;

a shuttle comprising a receptacle for accommodating an infusion device, at least a first movement-restraining arm, and a least a first hub-retaining arm, the shuttle being movable between a retracted position and an advanced position, the first movement-restraining arm engaging the upper surface of the sleeve when the shuttle is in the retracted position to inhibit movement of the shuttle toward the advanced position;

at least a first biasing member operatively connected to the shuttle to urge the shuttle toward the advanced position;

a hub having an upper side and a lower side, the hub being movable between a first position and a second position with respect to the shuttle, the first hub-retaining arm of the shuttle inhibiting movement of the hub away from the shuttle when the hub is in the first position;

a needle having an upper end and a lower end, the upper end being fixedly attached to the lower side of the hub, the lower end being configured to pierce skin, the lower end of the needle extending below the lower surface of the sleeve when the shuttle is in the advanced position and the hub is in the first position, the lower end of the needle being positioned above the lower surface of the sleeve when the hub is in the second position;

at least a second biasing member operatively connected to the hub to urge the hub upwardly from the shuttle away from the lower surface of the sleeve;

an actuator being movably attached to the sleeve such that, when the first movement-restraining arm is engaged with the upper surface, advancement of the actuator toward the sleeve permits disengagement the first movement-restraining arm of the shuttle from the upper surface of the sleeve;

wherein disengagement of the first movement-restraining arm of the shuttle from the upper surface of the sleeve allows the first biasing member to move the shuttle from the retracted position to the advanced position; and

wherein movement of the shuttle from the retracted position to the advanced position allows the first hub-retaining arm of the shuttle to release the hub such that the

second biasing member moves the hub from the first position to the second position.

2. The device of claim **1**, wherein the sleeve further comprises at least one aperture and the actuator further comprises at least one protrusion, wherein the at least one aperture and the at least one protrusion are configured such that the actuator and the sleeve can be rotated between a first position in which the actuator is inhibited from moving toward the lower surface of the sleeve and a second position in which the actuator is movable toward the lower surface to disengage the first movement-restraining arm of the shuttle from the upper surface of the sleeve.

3. The device of claim **1**, wherein the shuttle further comprises at least one movable member for engaging the infusion device to inhibit release of the infusion device from the shuttle before the first movement-restraining arm of the shuttle is disengaged from the upper surface of the sleeve.

4. The device of claim **1**, wherein the shuttle is received at least partially within the sleeve.

5. The device of claim **1**, wherein the first biasing member comprises a spring positioned between the sleeve and the shuttle.

6. The device of claim **1**, wherein the hub is received at least partially within the shuttle.

7. The device of claim **1**, wherein the second biasing member is comprises a spring positioned between the shuttle and the hub.

8. The device of claim **2**, wherein the at least one aperture is located in the upper surface of the sleeve and the at least one protrusion extends downwardly from a lower side of the actuator.

9. The device of claim **3**, wherein the at least one movable member is configured to be engaged by the hub when the hub is in the first position to cause contact between the movable member and the infusion device to inhibit release of the infusion device from the shuttle before the first movement-restraining arm of the shuttle is disengaged from the upper surface of the sleeve.

10. The device of claim **3**, wherein the at least one movable member is configured to be engaged by a cam surface of the sleeve when the shuttle is in the retracted position to cause contact between the movable member and the infusion device to inhibit release of the infusion device from the shuttle before the first movement-restraining arm of the shuttle is disengaged from the upper surface of the sleeve.

11. An inserter for placing an infusion device at least partially into skin, comprising:

a sleeve having a bottom surface, the bottom surface being configured to engage skin;

a carriage for carrying an infusion device, the carriage positioned at least partially within the sleeve, the carriage being movable between a retracted position and an advanced position, the lowest portion of the infusion device being spaced upwardly from the bottom surface of the sleeve when the carriage is in the retracted position, the bottom portion of the infusion device extending below the lower surface of the sleeve when the carriage is in the advanced position;

at least a first biasing member operatively connected to the carriage to urge the carriage toward the advanced position;

a hub and a needle, the hub being movable between a first position and a second position with respect to the carriage, the needle having an upper end and a lower end, the upper end being fixedly attached to the lower side of the hub, the lower end being configured to pierce skin, the needle extending below the carriage when the hub is in the first position, the lower end of the needle extending no lower than the carriage when the hub is in the second position;

at least a second biasing member operatively connected to the hub to urge the hub upwardly from the carriage away from the lower surface of the sleeve;

an actuator operatively connected to the sleeve to cause the first biasing member to move the carriage from the retracted position to the advanced position;

wherein movement of the carriage from the retracted position toward the advanced position permits the hub to move from the first position to the second position.

12. The inserter of claim **11**, wherein the inserter is configured to be removed from the infusion device before infusion commences.

13. The inserter of claim **11**, wherein the carriage further comprises at least a first arm configured to engage the sleeve to inhibit movement of the carriage from the retracted position to the advanced position, the arm being engageable by the actuator such that the actuator can disengage the arm from the sleeve to permit the first biasing member to urge the carriage from the retracted position to the advanced position.

14. The inserter of claim **11**, wherein the carriage further comprises at least a second arm configured to engage the hub to inhibit movement of the hub from the first position to the second position, the second arm being held in engagement with the hub by the shuttle at least until the lower end of the needle pierces the skin.

15. The inserter of claim **11**, wherein the first biasing member engages the carriage and the actuator.

16. The inserter of claim **11**, wherein the second biasing member engages the carriage and the hub.

17. The inserter of claim **11**, wherein a surface of the insertion device is pressed against an exterior surface of the skin when the carriage is in the advanced position.

18. The inserter of claim **17**, wherein the surface of the insertion device is an adhesive surface.

19. An inserter for placing an infusion device at least partially into skin, comprising:

a housing having a bottom surface, the bottom surface being configured to engage skin;

a carriage for carrying an infusion device, the carriage positioned at least partially within the housing, the carriage being movable between a retracted position and an advanced position, the lowest portion of the infusion device being spaced upwardly from the bottom surface of the housing when the carriage is in the retracted position, the bottom portion of the infusion device extending below the lower surface of the housing when the carriage is in the advanced position, the carriage comprising at least one movable member for engaging the infusion device to inhibit release of the infusion device from the carriage before the carriage moves from the retracted position toward the advanced position;

at least a first biasing member operatively connected to the carriage to urge the carriage toward the advanced position;

an actuator operatively connected to the housing to cause the first biasing member to move the carriage from the retracted position to the advanced position;

wherein movement of the carriage from the retracted position toward the advanced position causes the hub to move from the first position to the second position.

20. The device of claim **19**, wherein the at least one movable member is configured to be engaged by a cam surface of the housing when the carriage is in the retracted position to cause contact between the movable member and the infusion device to inhibit release of the infusion device from the carriage before the carriage moves from the retracted position toward the advanced position.

21. The device of claim **19**, further comprising a hub, wherein the at least one movable member is configured to be engaged by the hub when the hub is in the first position to cause contact between the movable member and the infusion device to inhibit release of the infusion device from the carriage before the carriage moves from the retracted position toward the advanced position.

22. The device of claim **19**, wherein the at least one movable member further comprises at least one foot configured to extend under at least a portion of the infusion device when the carriage is in the retracted position.

23. The device of claim **20**, wherein the at least one movable member engages the infusion device near an outer periphery of the infusion device.

* * * * *