US 20070135774A1

(19) United States

(12) Patent Application Publication

(10) Pub. No.: US 2007/0135774 A1

(43) Pub. Date: Jun. 14, 2007

Turner et al.

(54) **FLUID DELIVERY DEVICES, SYSTEMS AND METHODS**

(75) Inventors: **Brandon Turner**, Austin, TX (US); **John Burns**, Austin, TX (US); **Dan Benzon**, Austin, TX (US); **Adam Burnight**, Austin, TX (US); **Brian Highley**, Keller, TX (US); **Jason Adams**, Frisco, TX (US); **Kraig Kooiman**, Flower Mound, TX (US); **Clint Taylor**, Addison, TX (US)

Correspondence Address:
FULBRIGHT & JAWORSKI L.L.P.
600 CONGRESS AVE.
SUITE 2400
AUSTIN, TX 78701 (US)

(73) Assignee: **Patton Medical Devices, LP**

(21) Appl. No.: **11/592,719**

(22) Filed: **Nov. 3, 2006**

Related U.S. Application Data

(60) Provisional application No. 60/733,311, filed on Nov. 3, 2005.

Publication Classification

(51) **Int. Cl.**
A61K 9/02 (2006.01)

(52) **U.S. Cl.** **604/288**

(57) **ABSTRACT**

Fluid delivery devices, systems and methods. The fluid delivery devices may be used to delivery fluid (e.g., insulin) to a user. The devices may have one or more inlets, and may be configured for use with an injection device, such as a syringe, and/or with a pump.

DEXCOM
EXHIBIT 1111

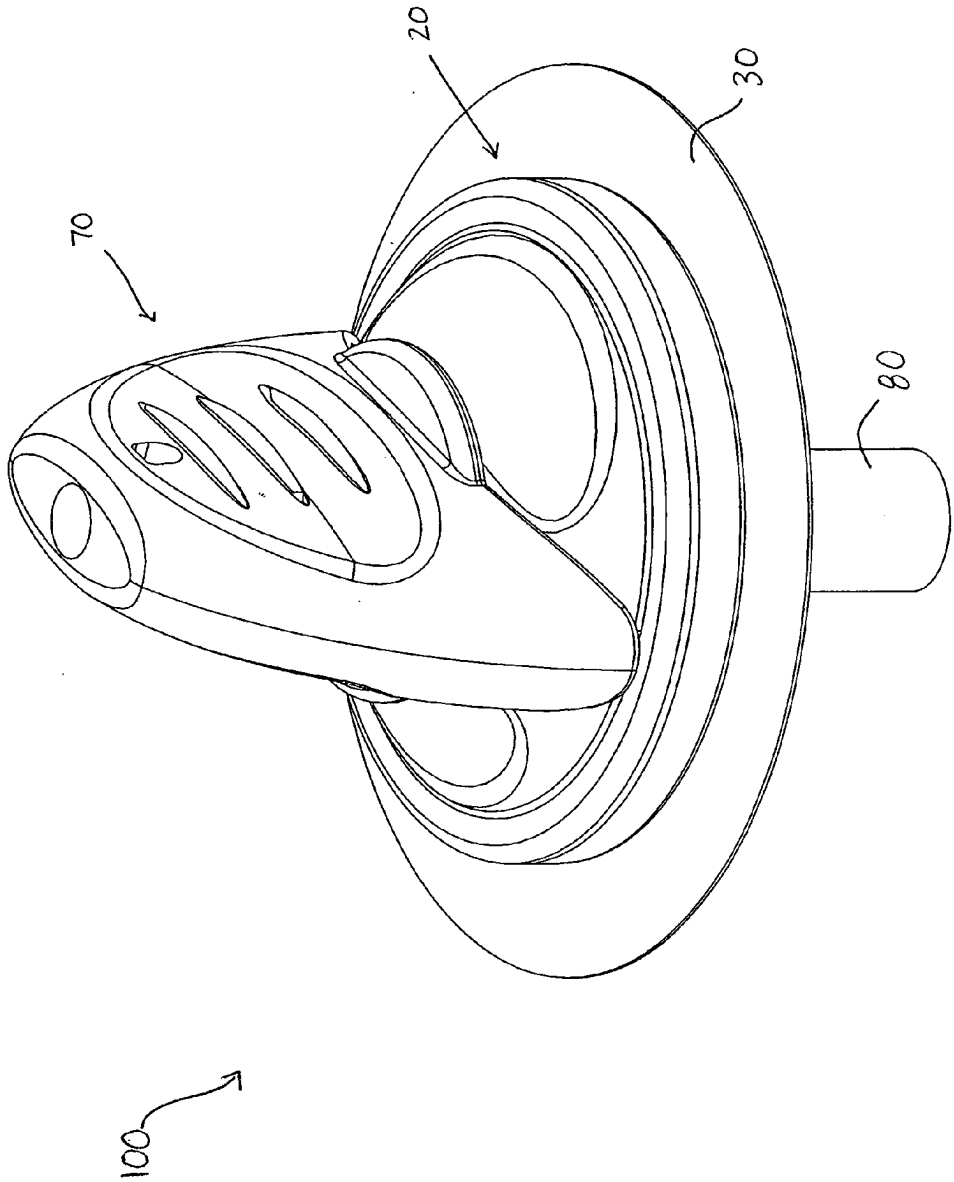

FIG. 1

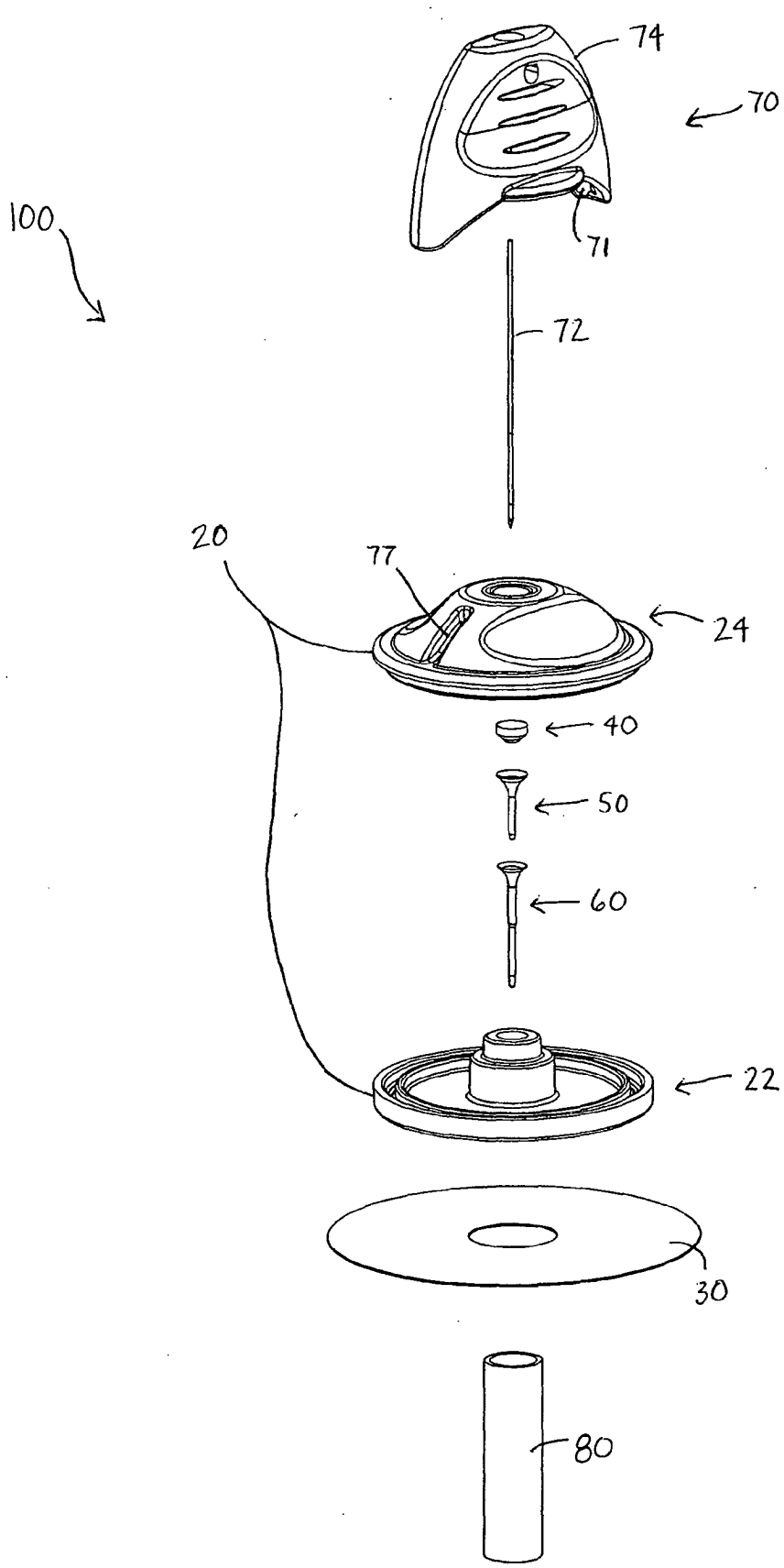

FIG. 2A

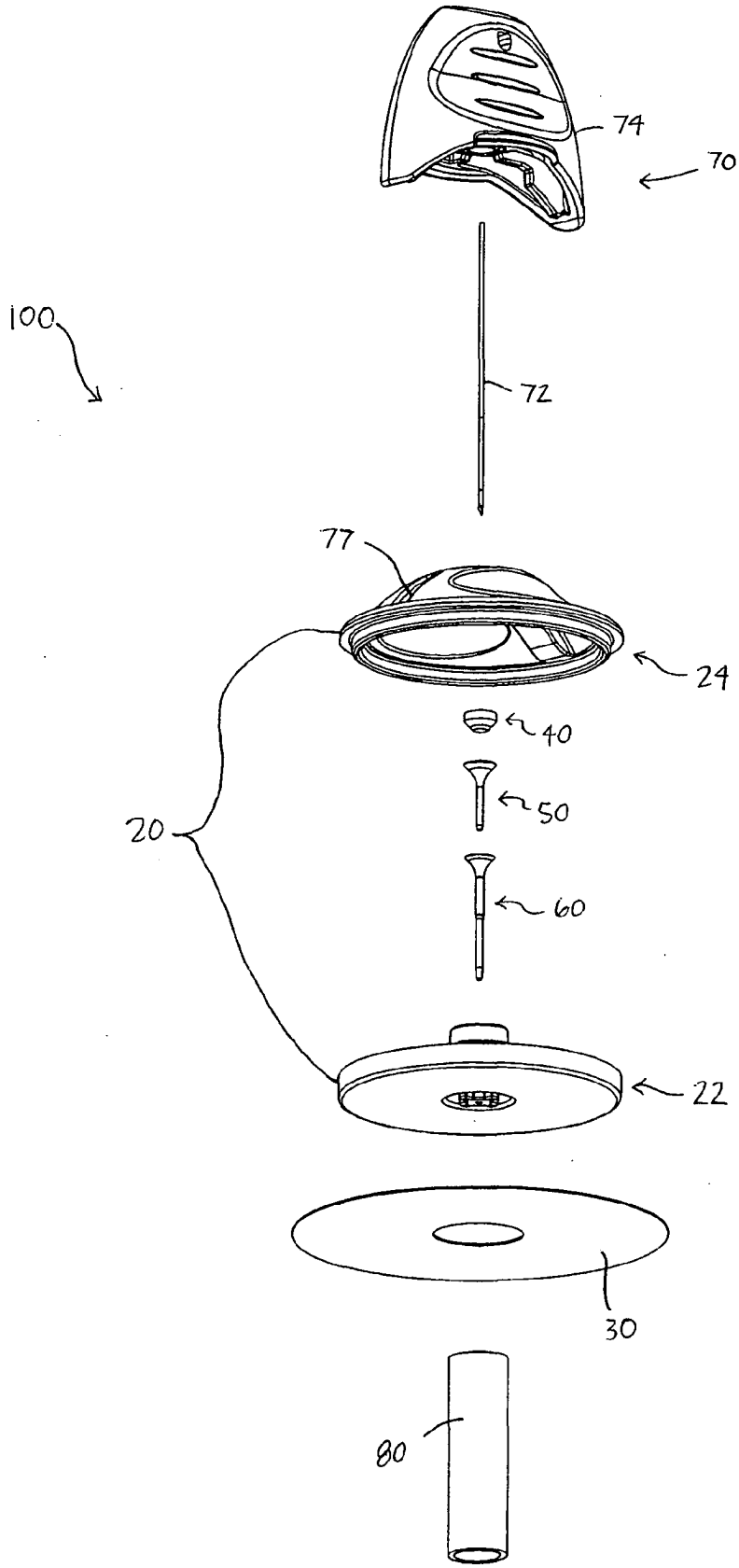

FIG. 2B

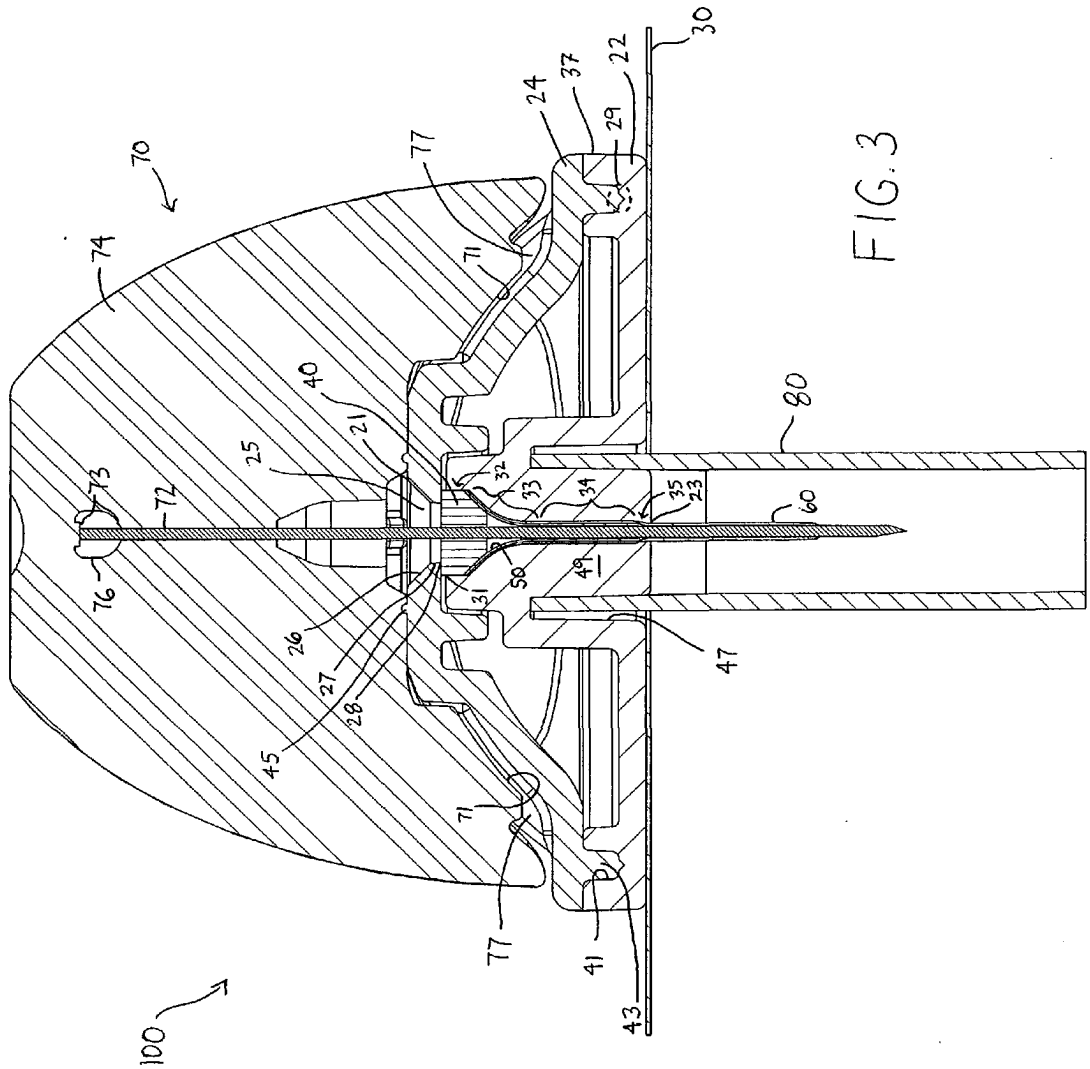
70
74
77
71
24
37
22
29
30
40
21
25
73
72
76
32
33
34
35
23
60
80
50
49
31
26
27
28
45
47
71
77
41
43
100

FIG. 3

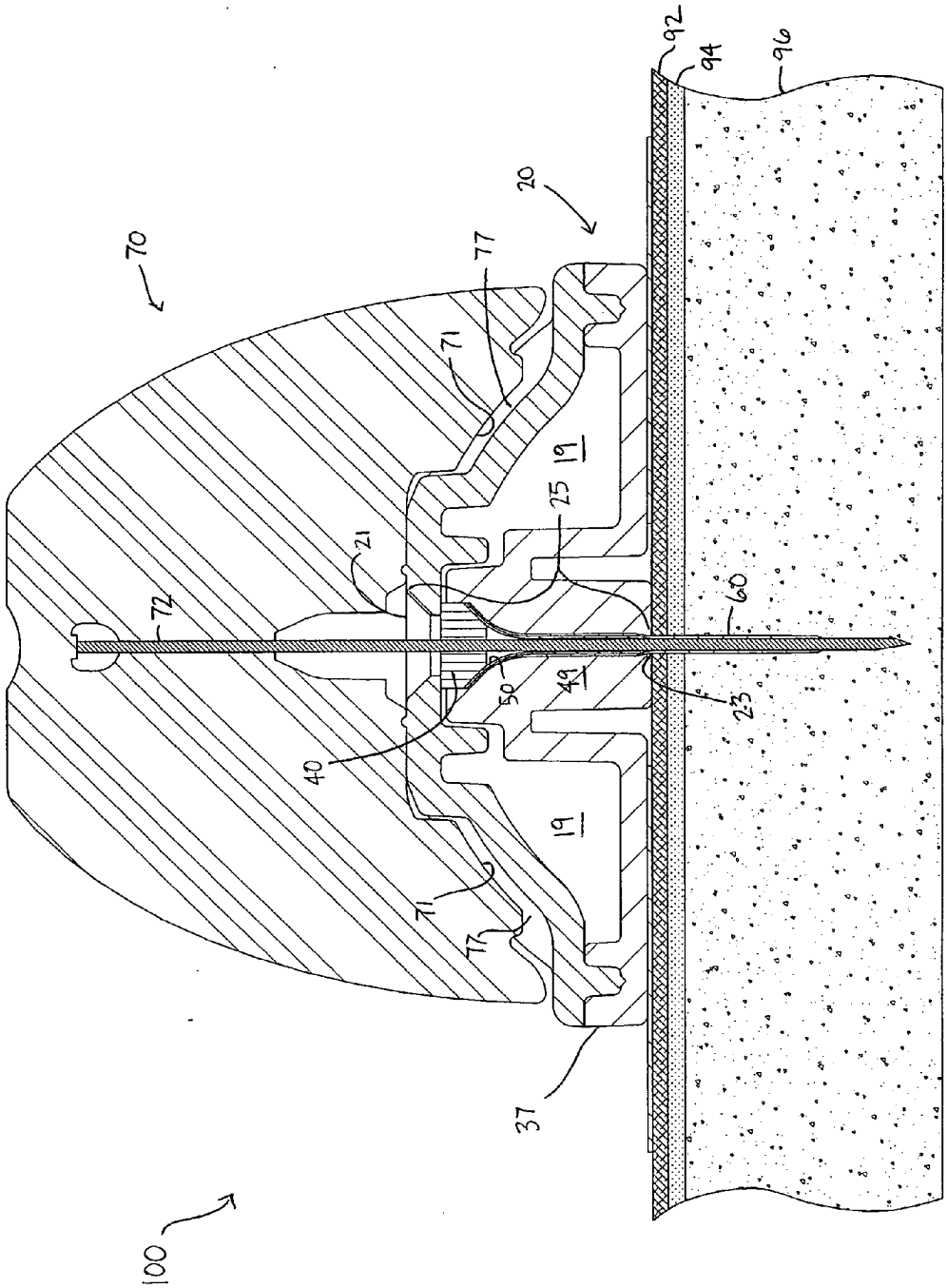

FIG. 4

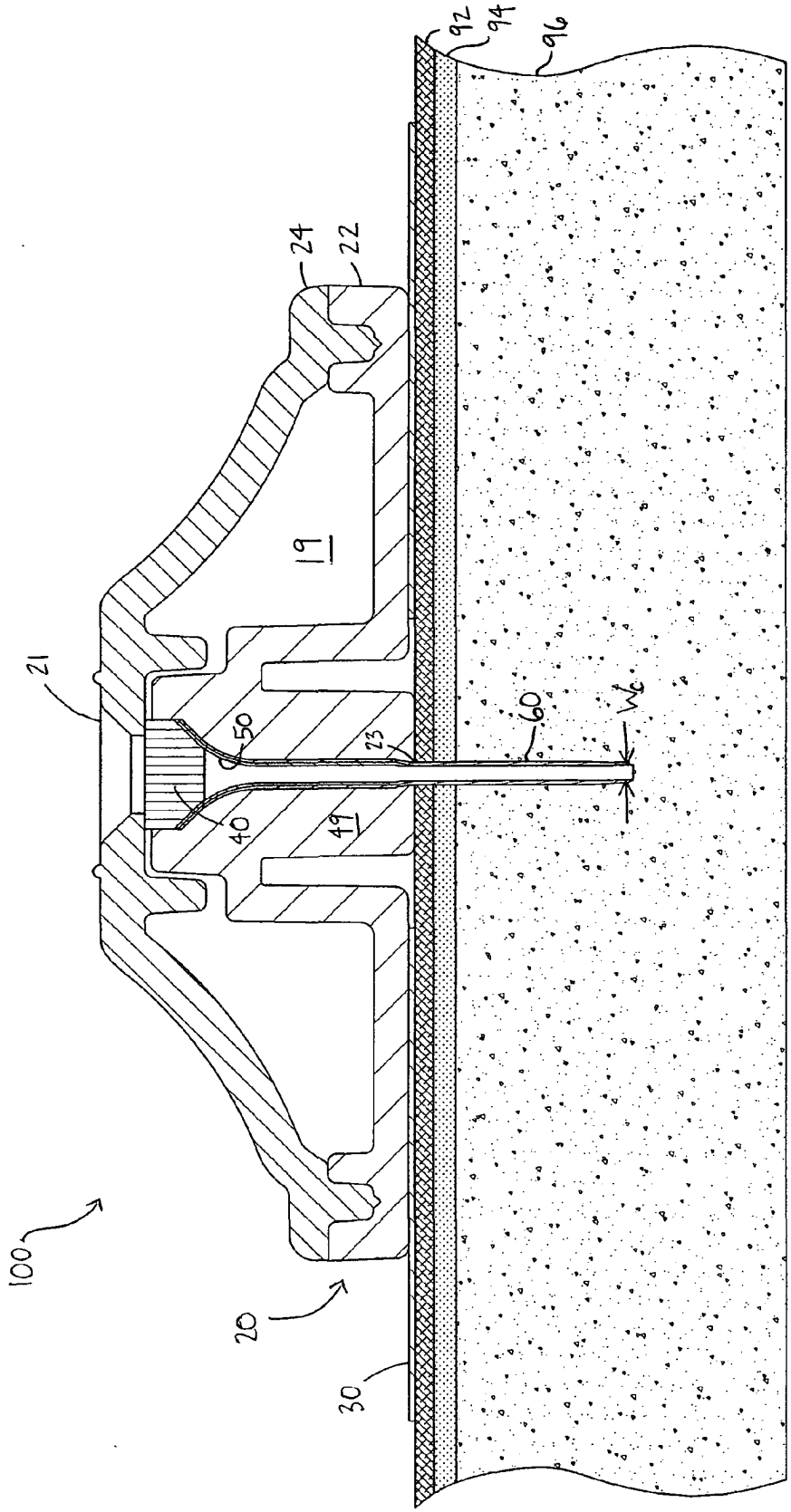

FIG. 5A

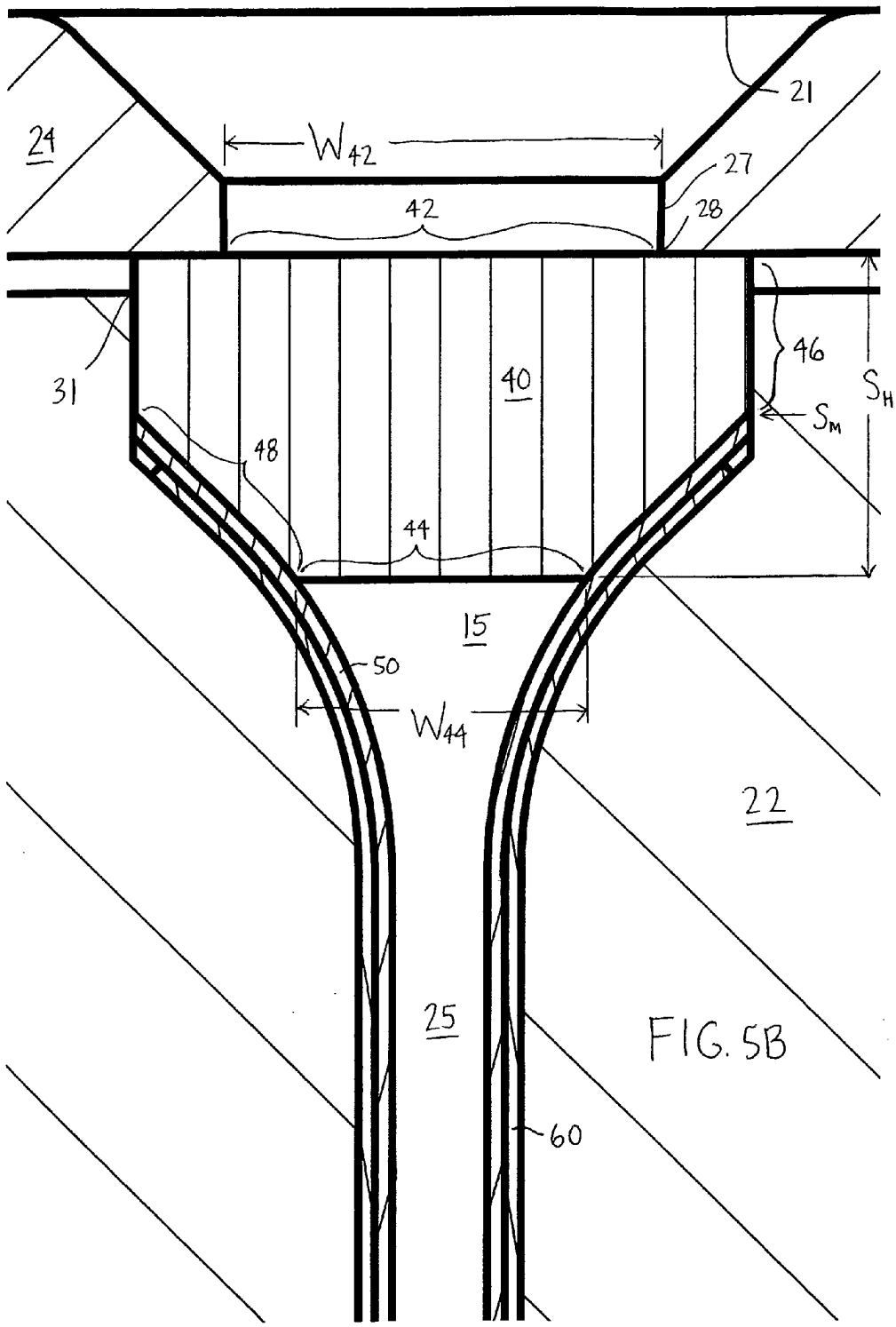

FIG. 5B

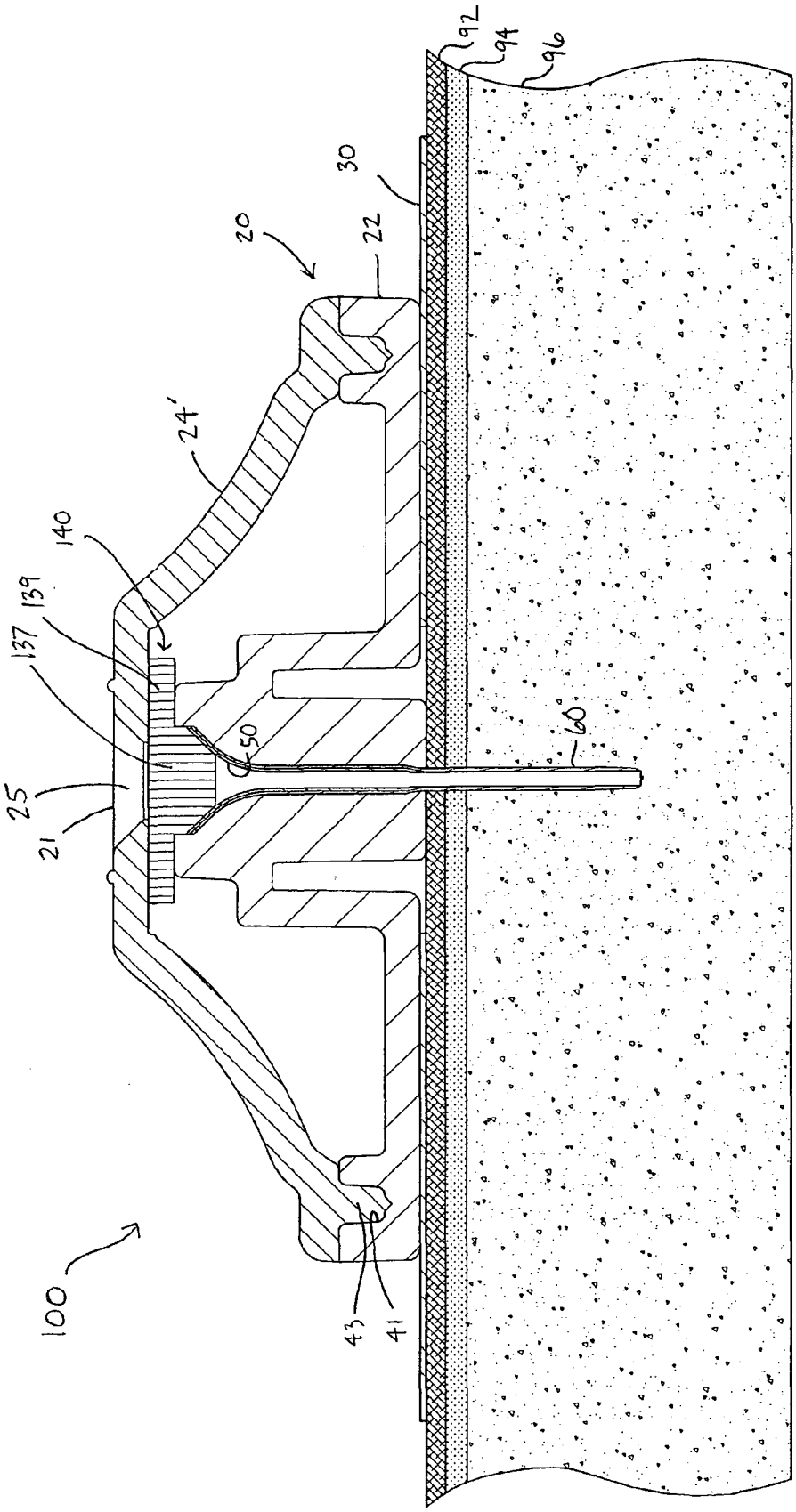

FIG. 5C

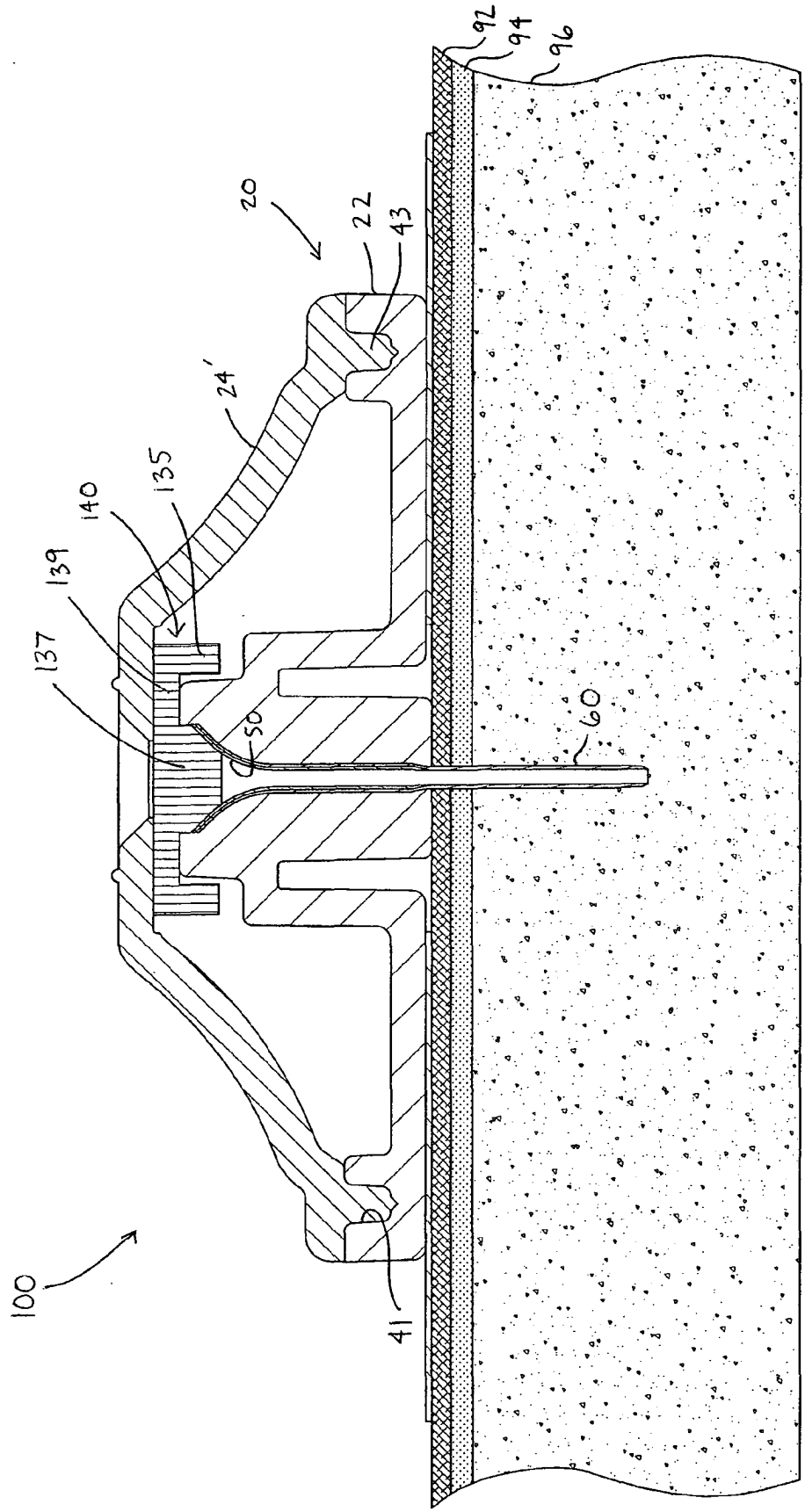

FIG. 5D

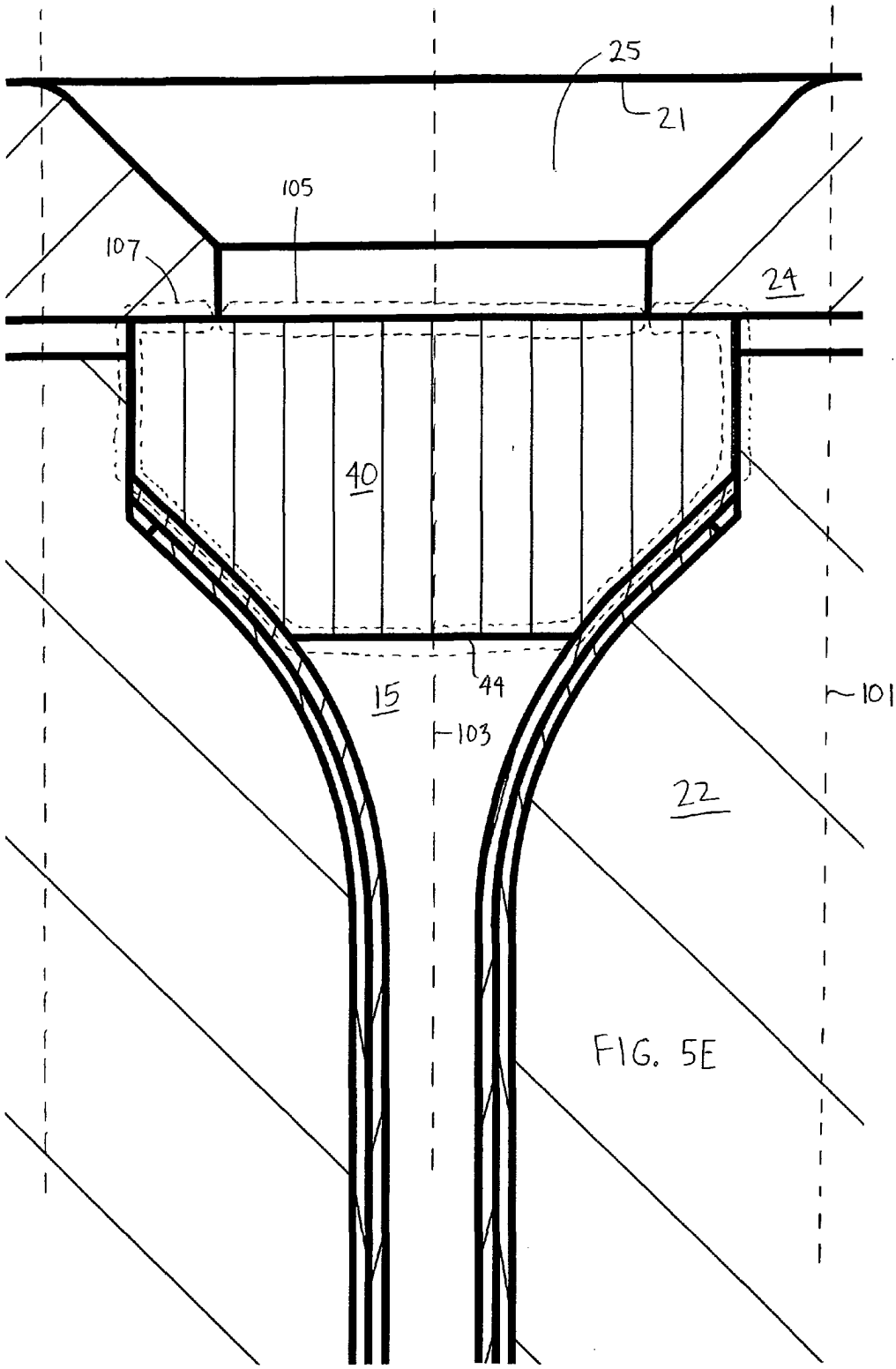

FIG. 5E

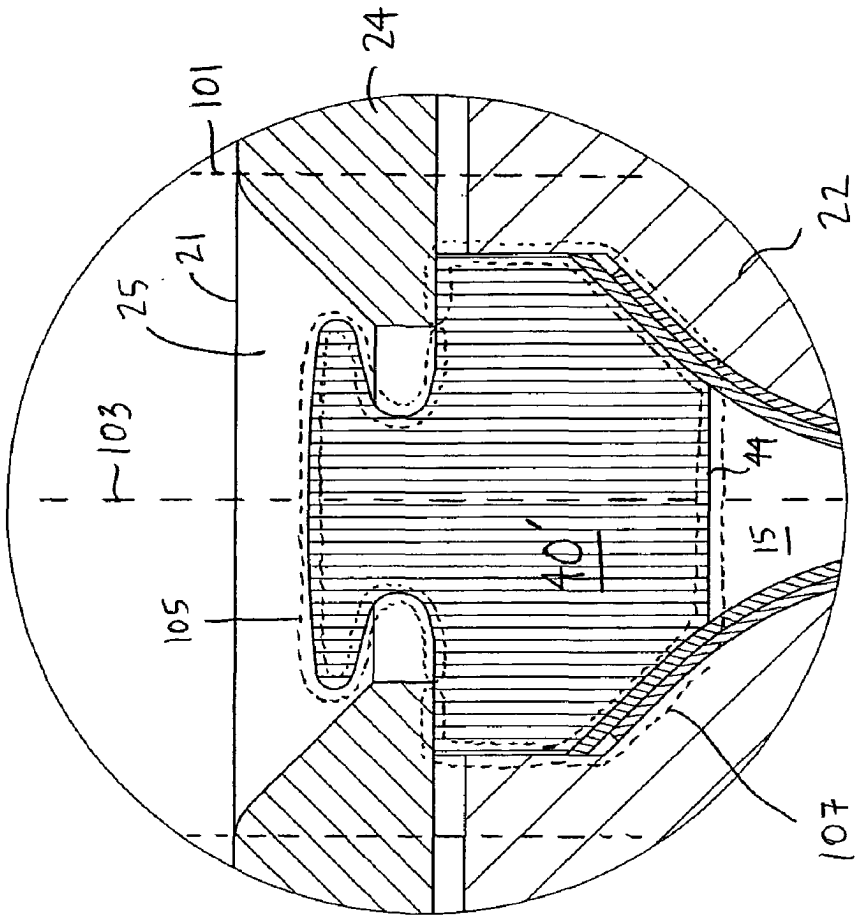

FIG. 5F

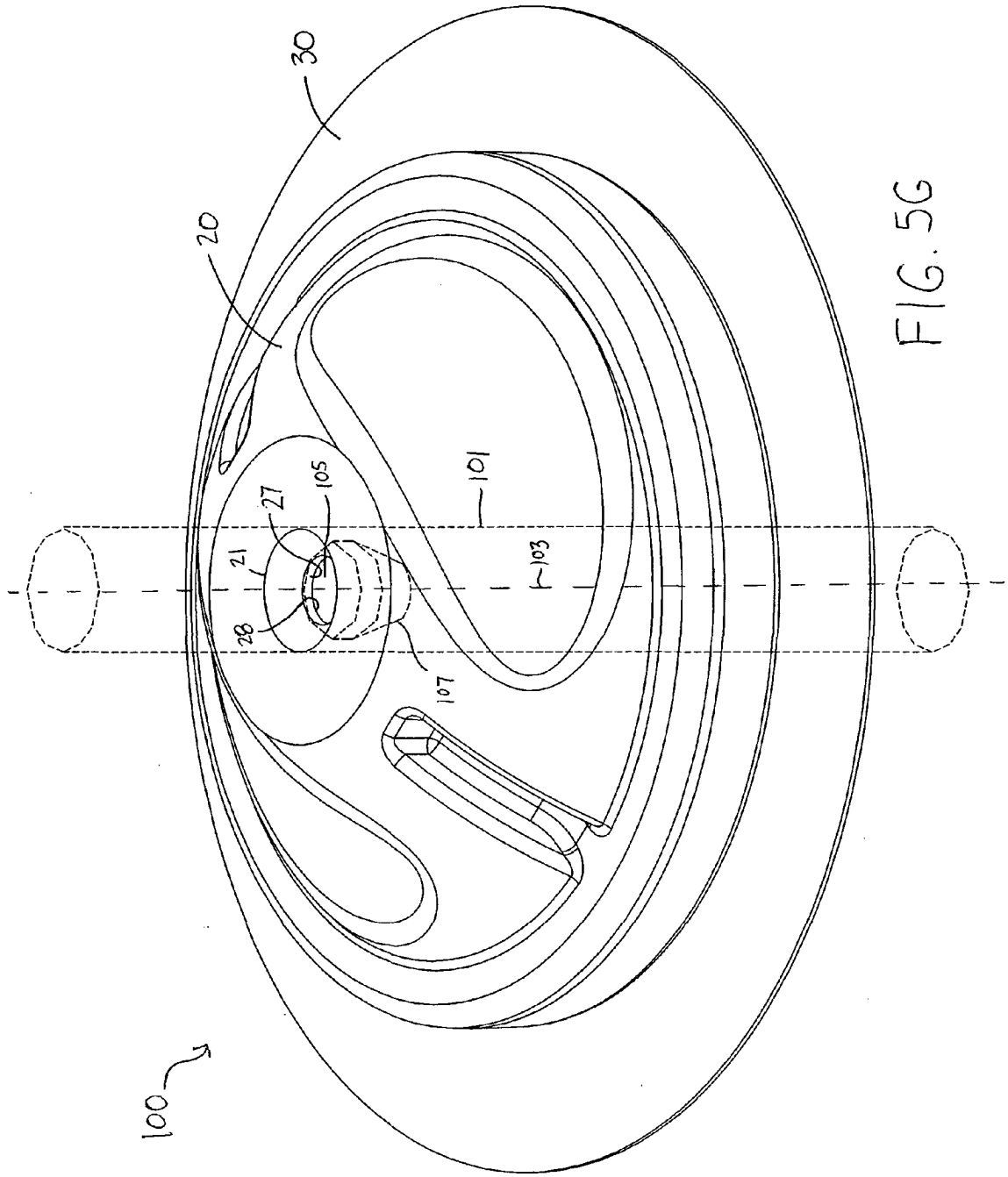

FIG. 5G

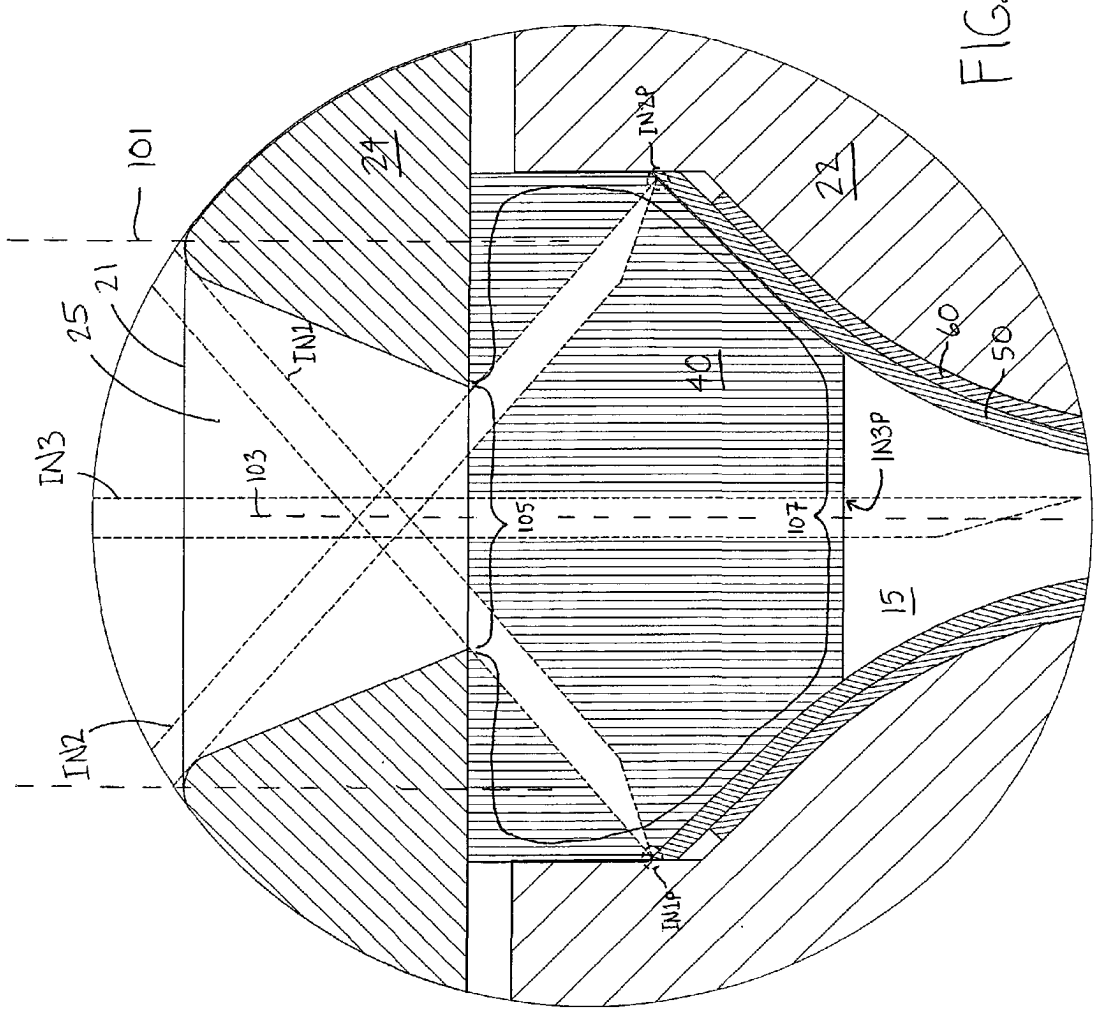

FIG. 5H

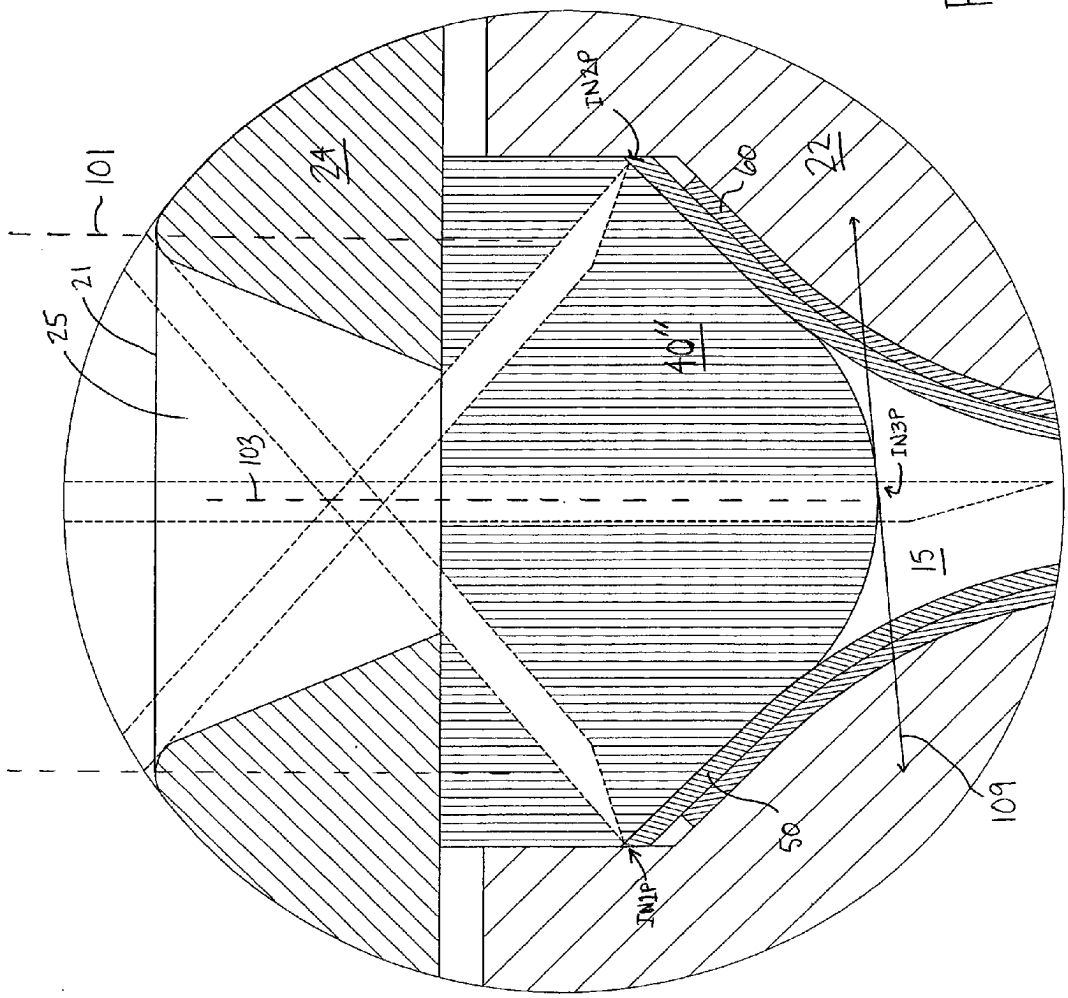

FIG. 5I

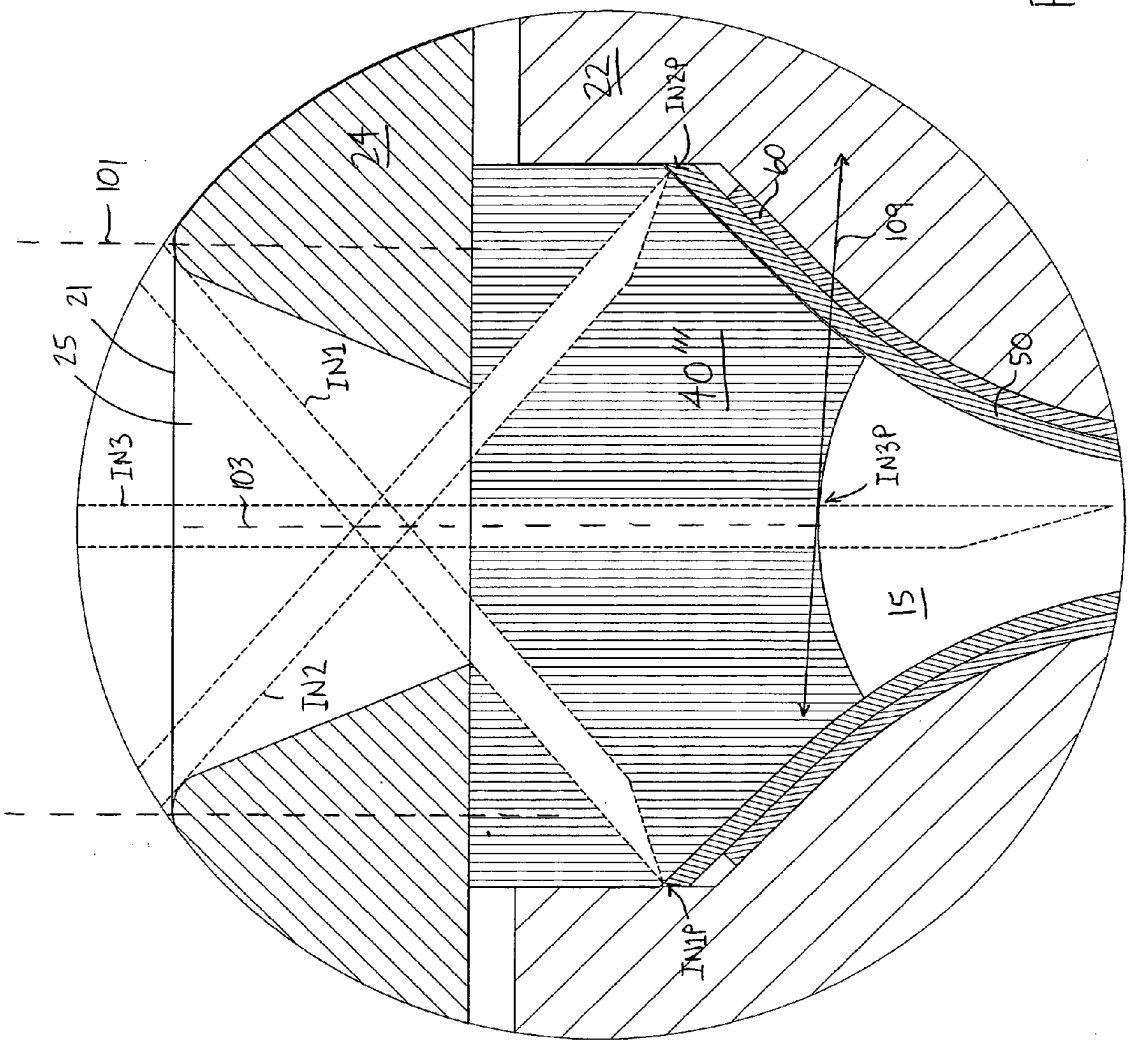

FIG. 5J

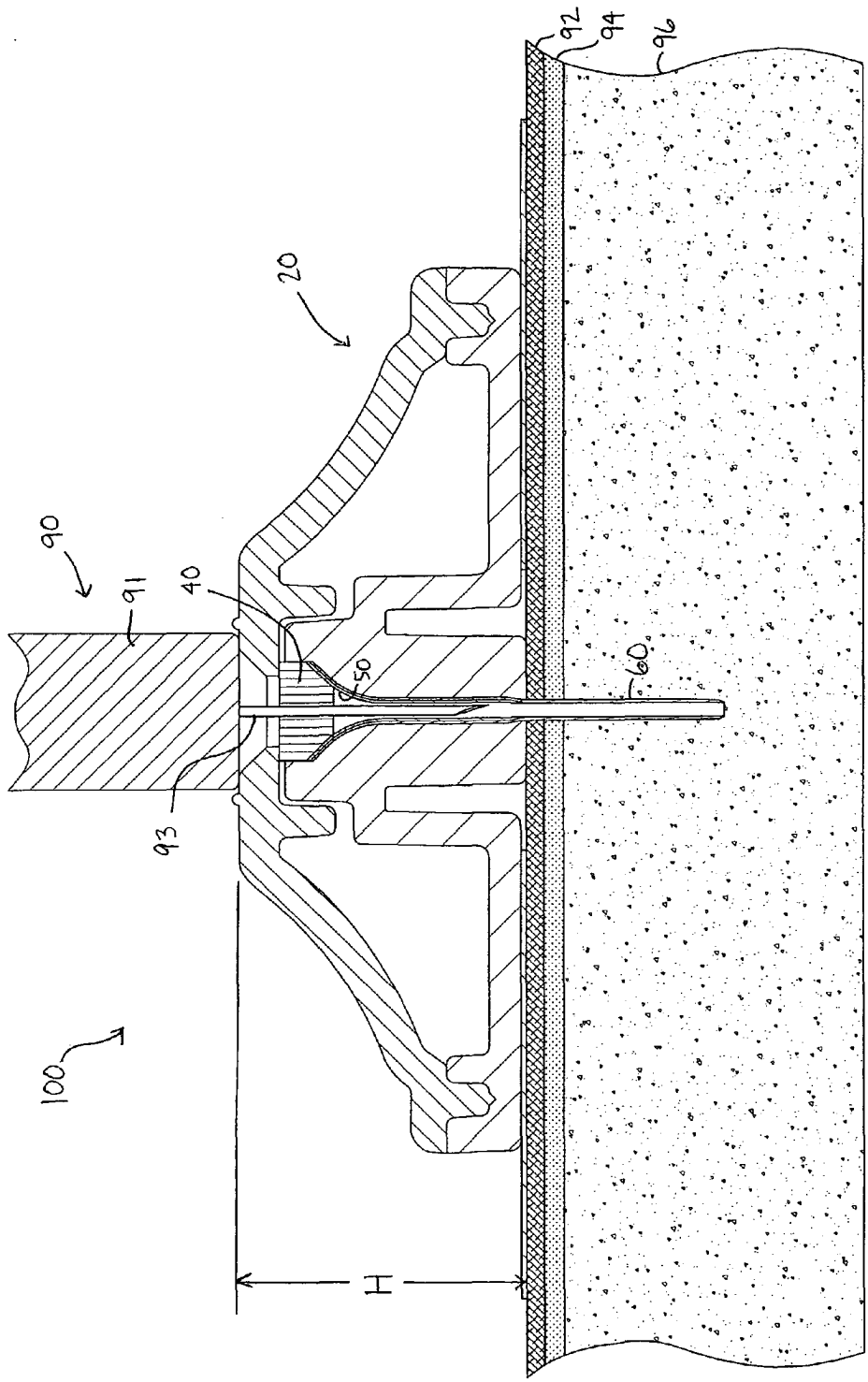

FIG. 6

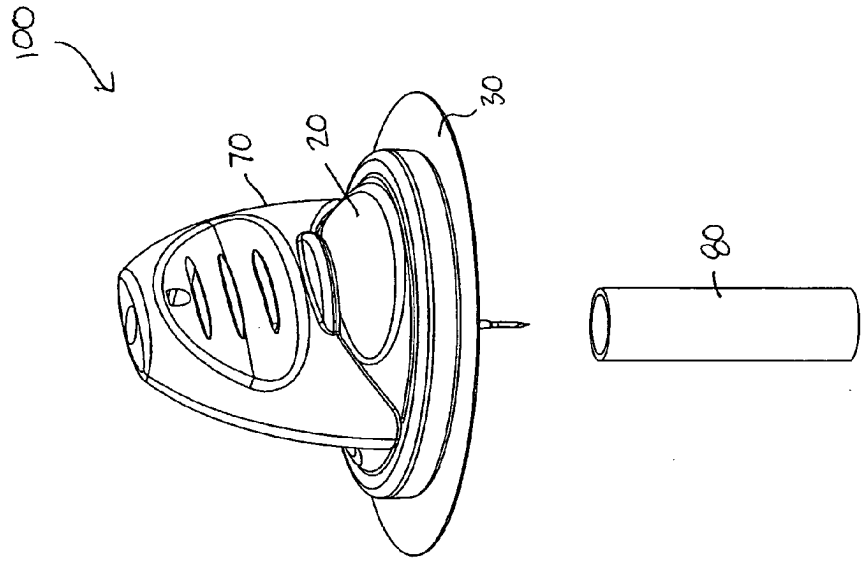

FIG. 7B

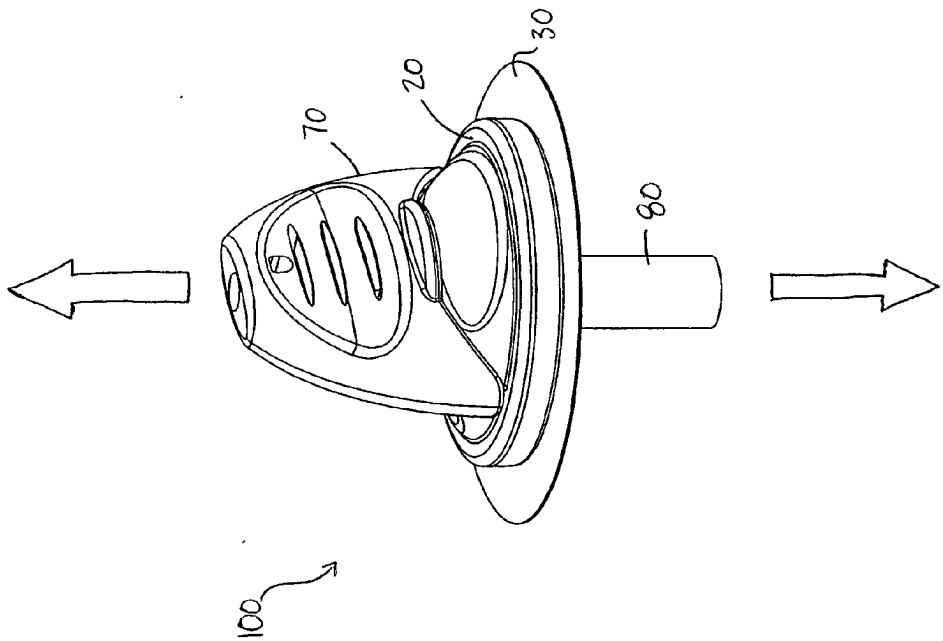

FIG. 7A

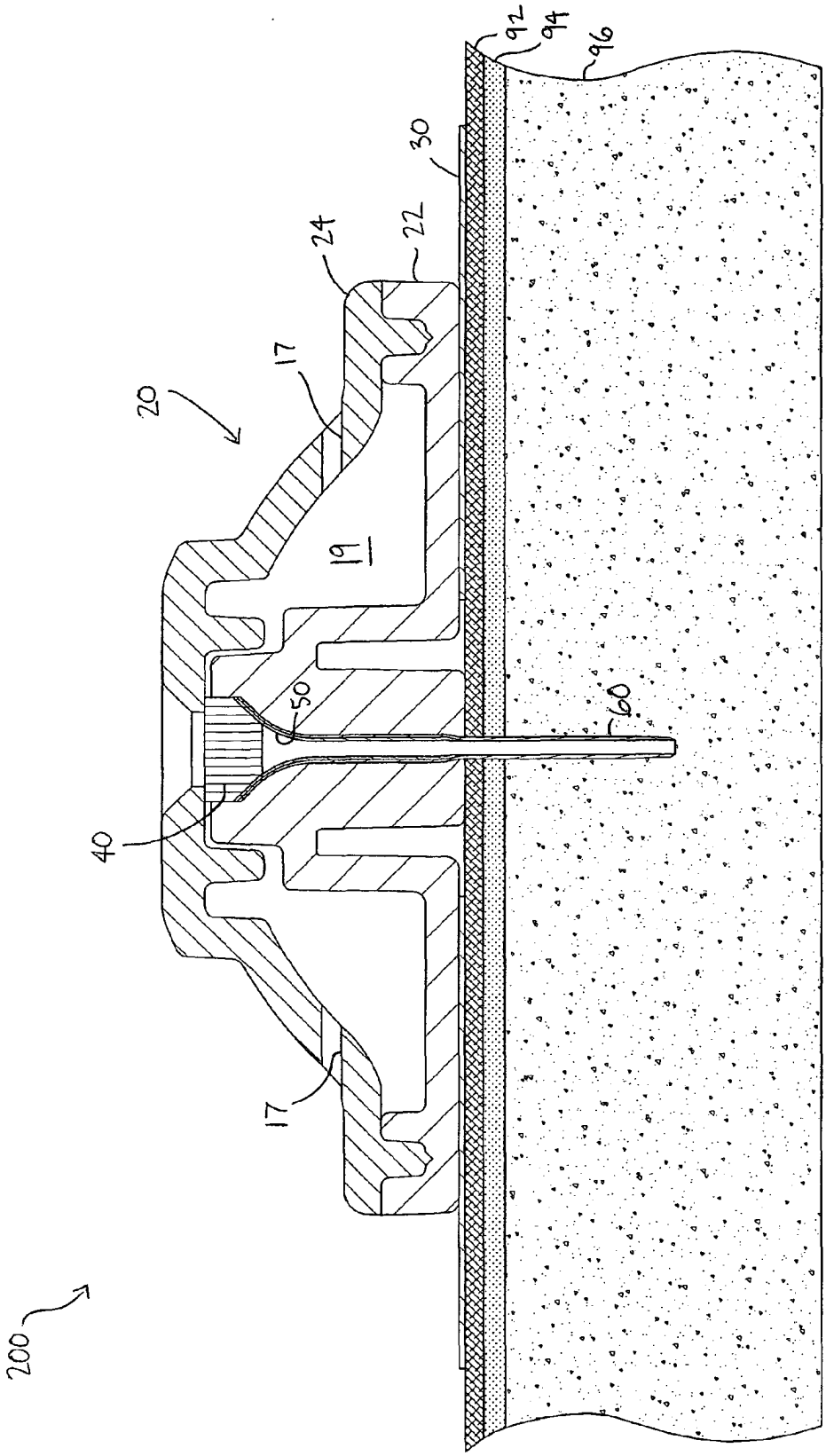

FIG. 8

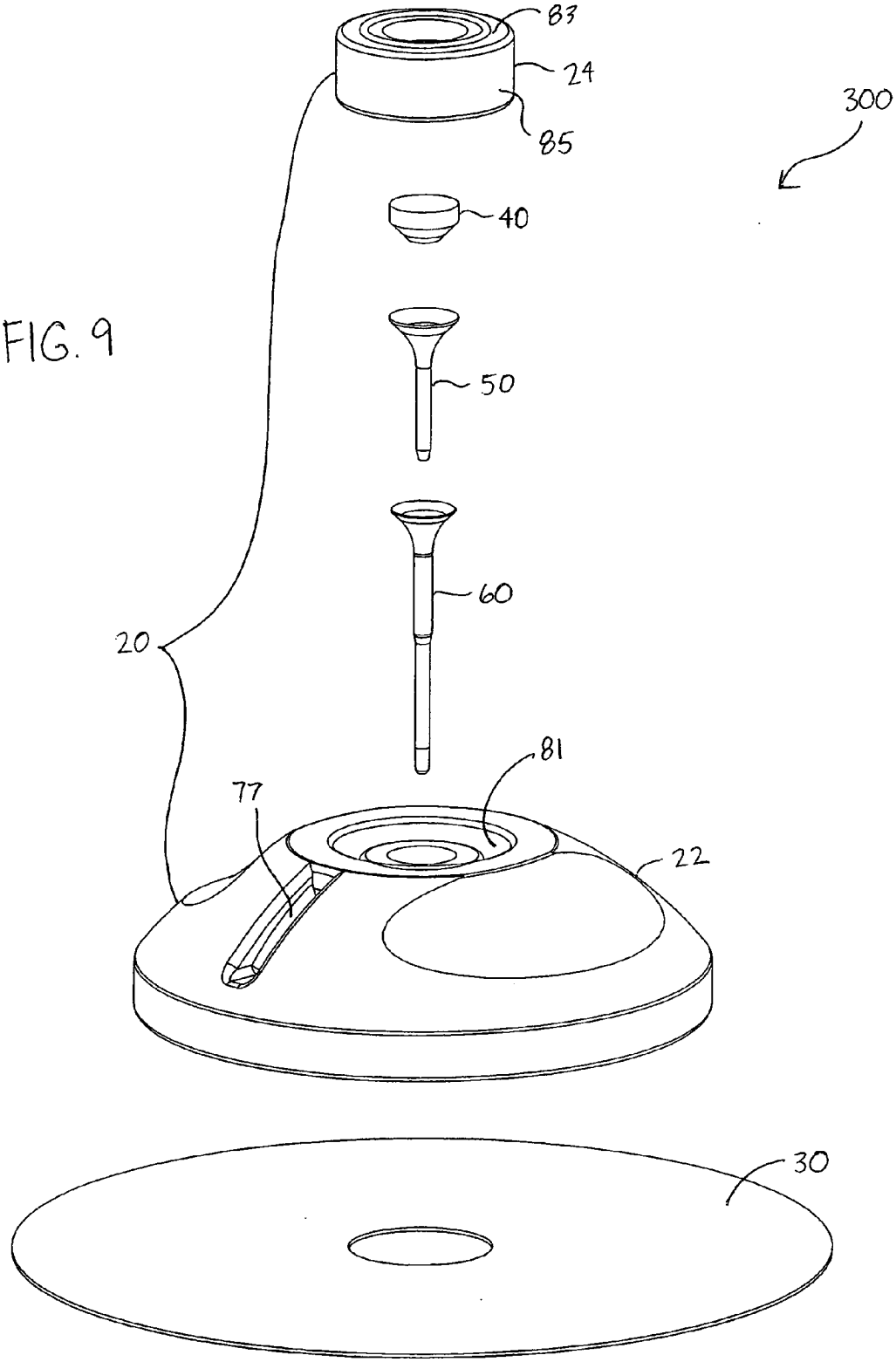

FIG. 9

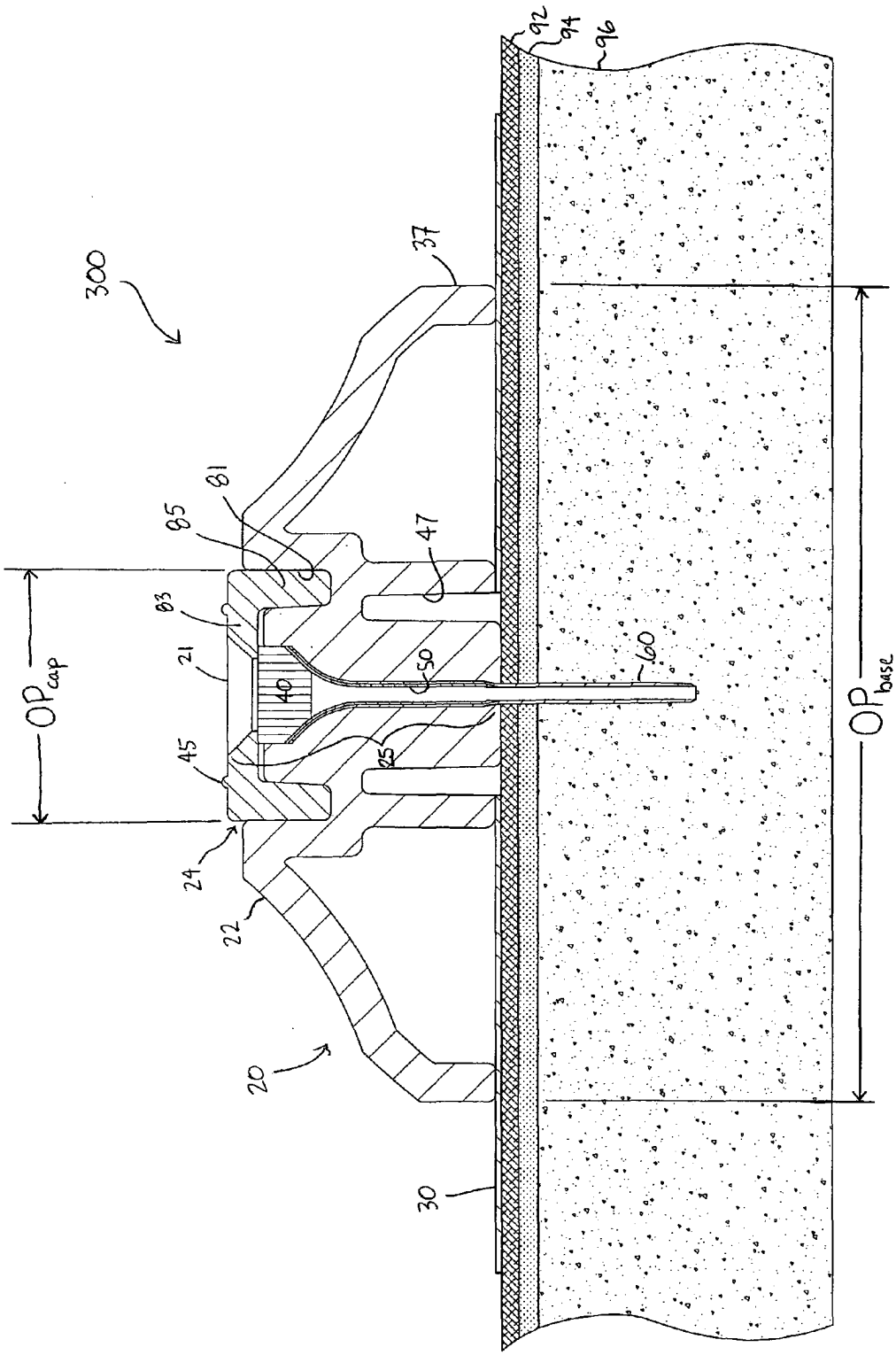
300
37
81
85
47
83
21
40
50
60
45
25
24
22
20
30
92
94
96
OP_{cap}
OP_{base}

FIG. 10

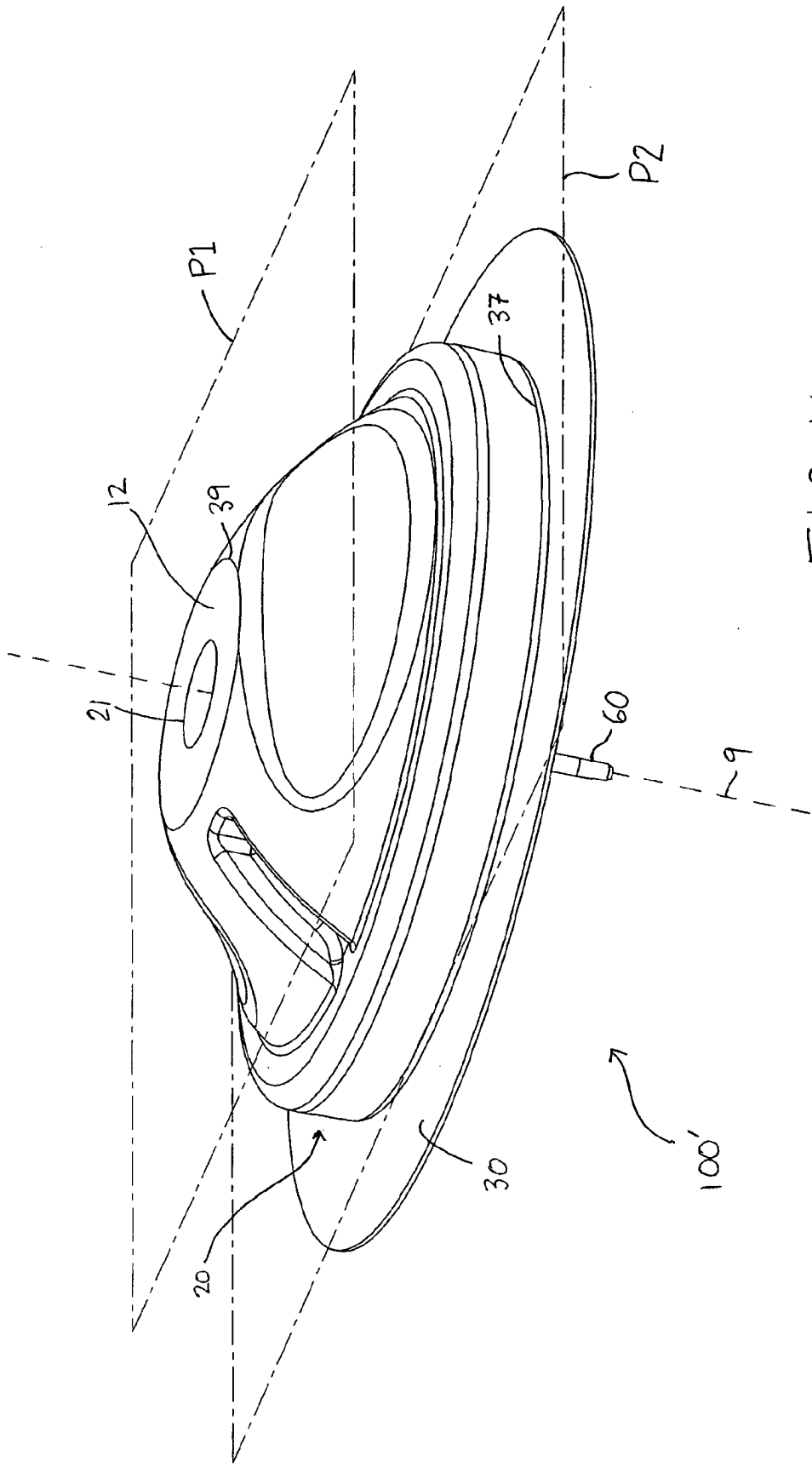

FIG. 11

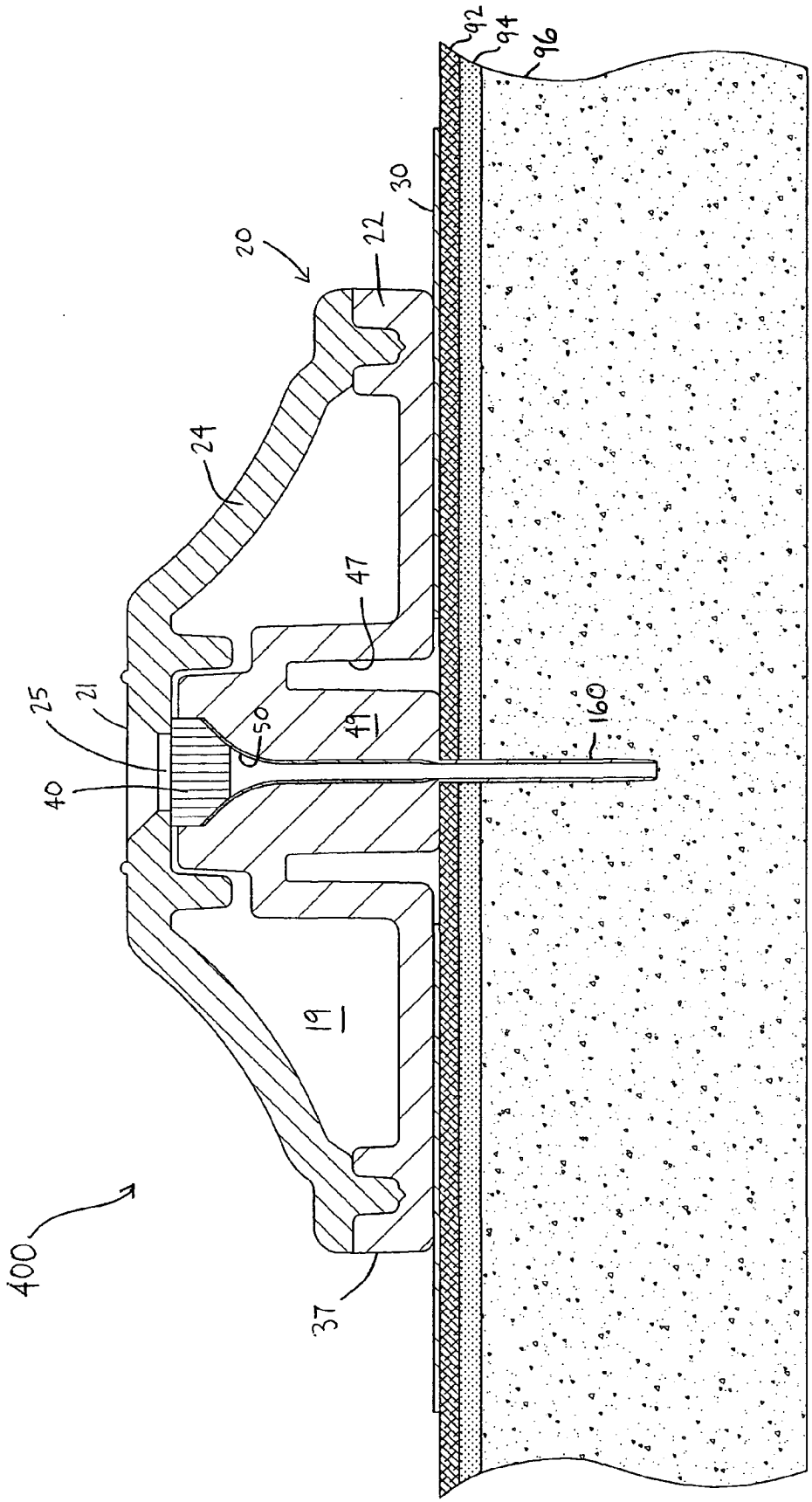

FIG. 12

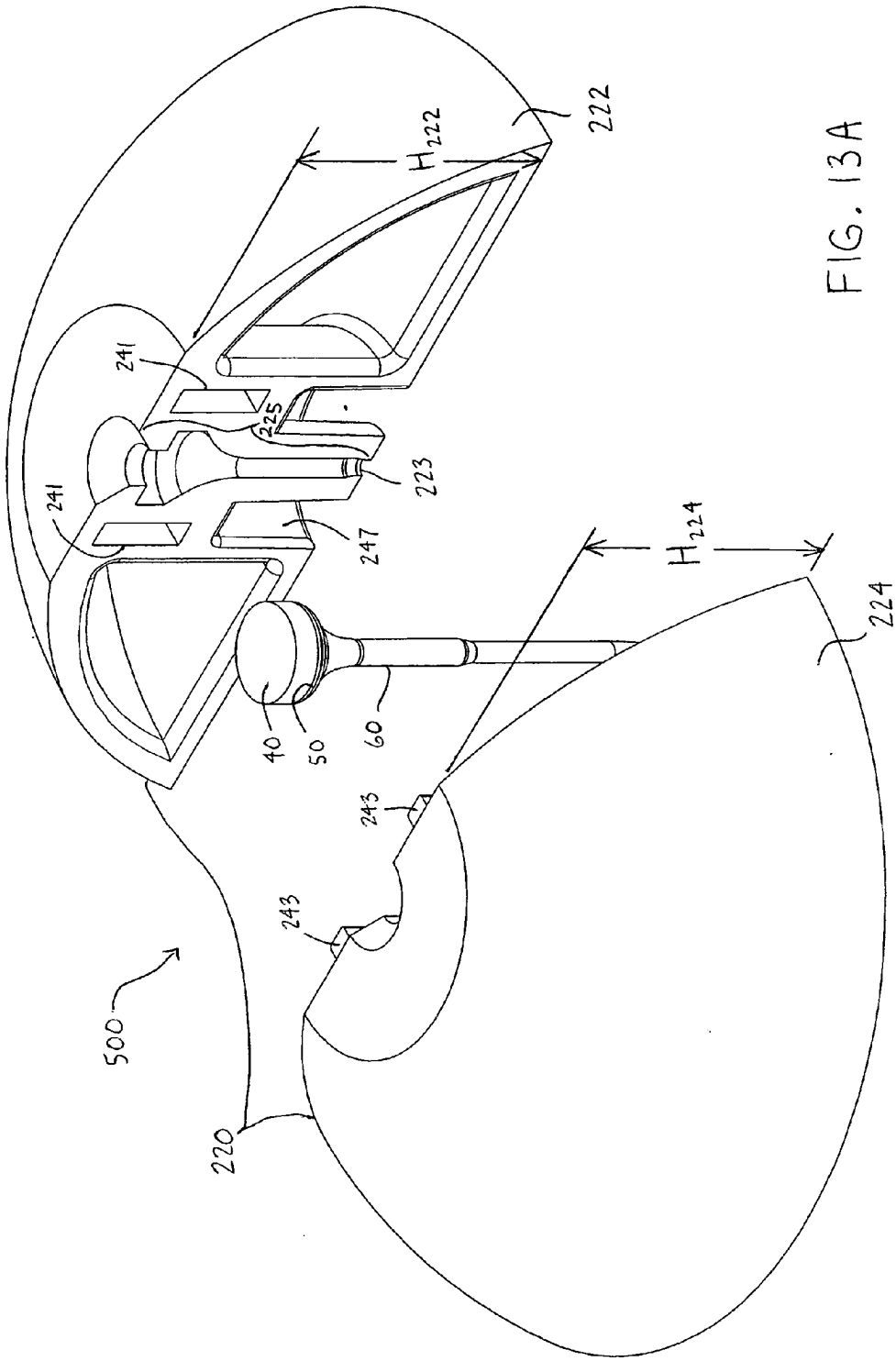

FIG. 13A

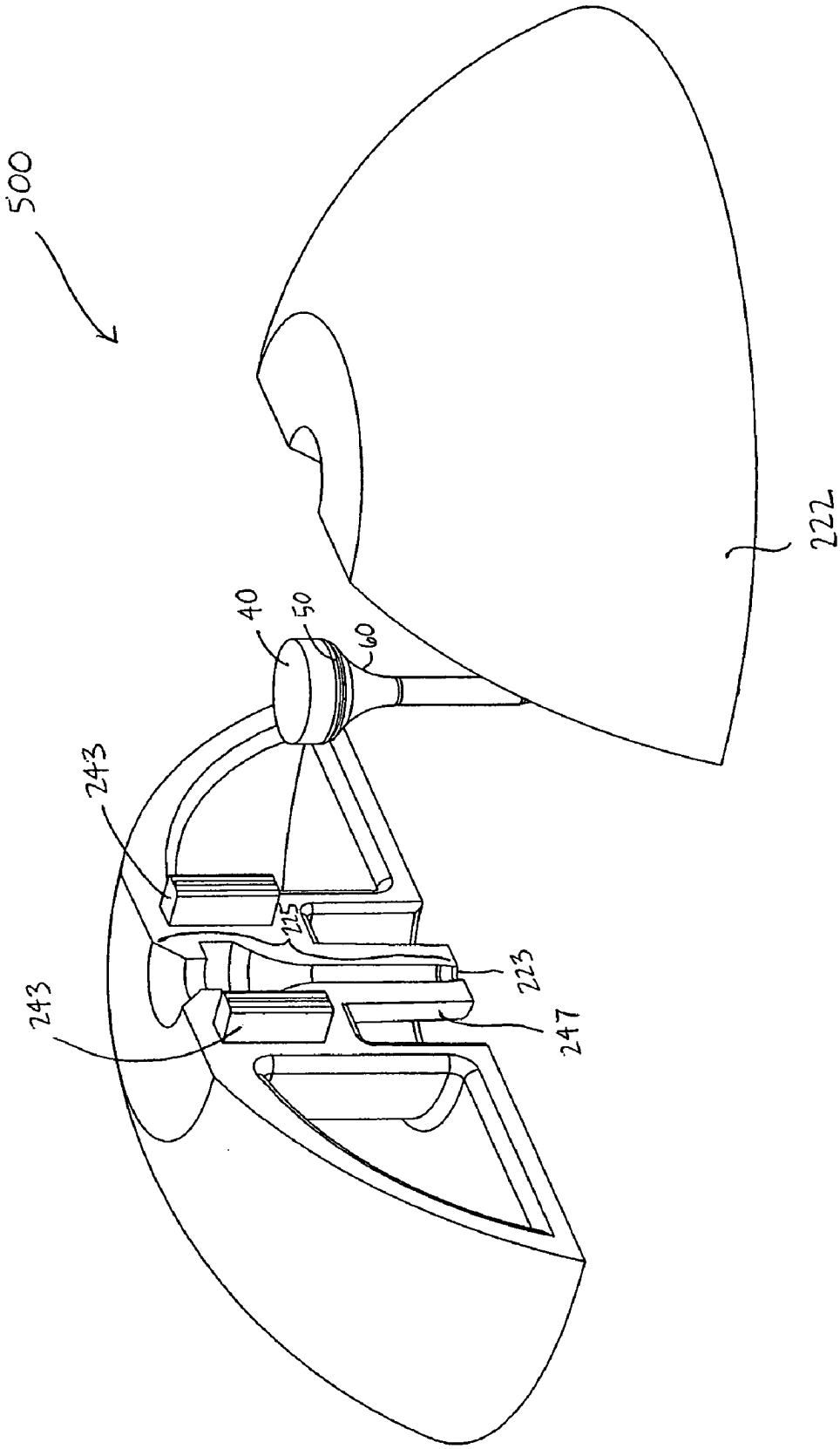

FIG. 13B

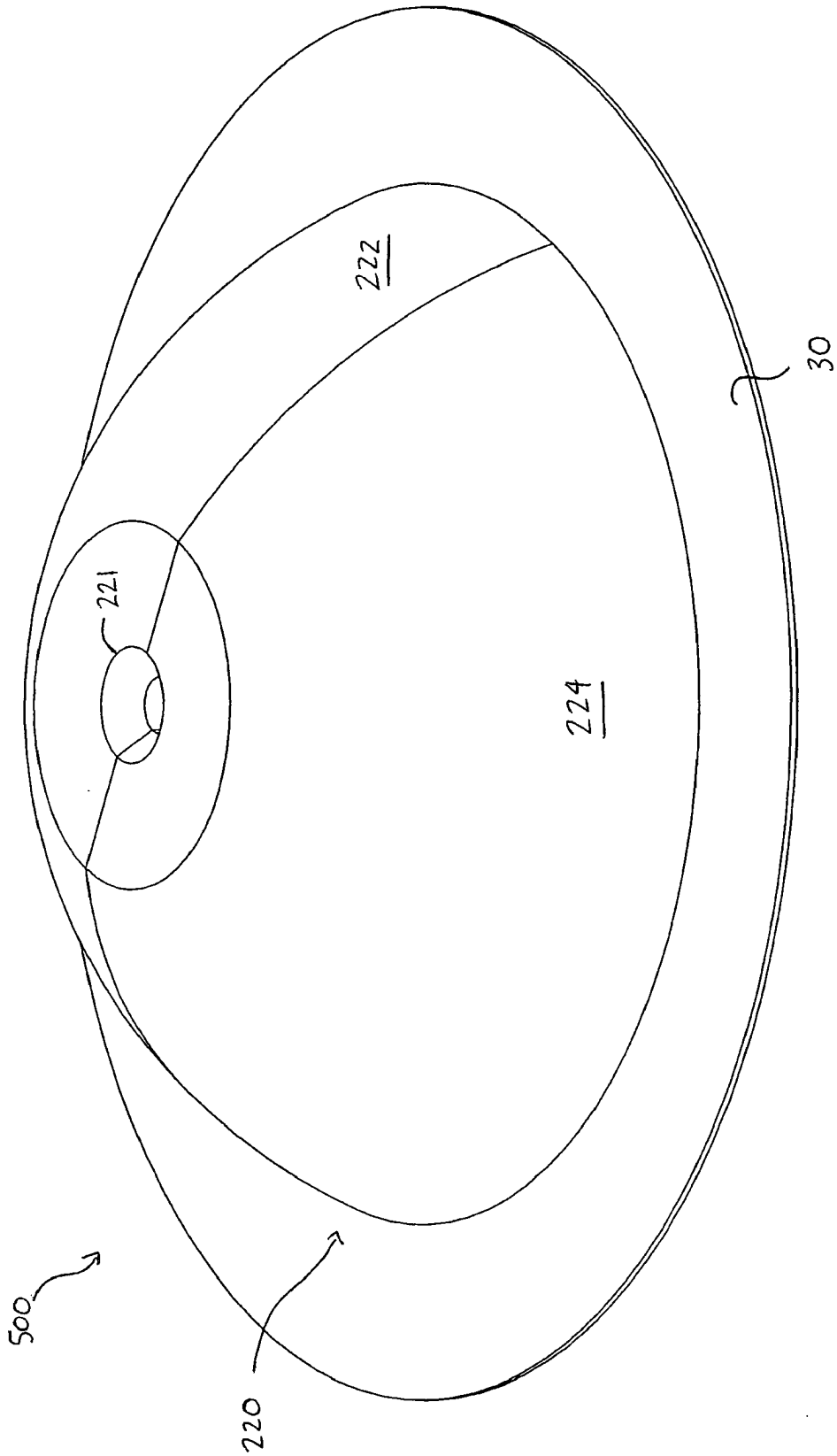

FIG. 14

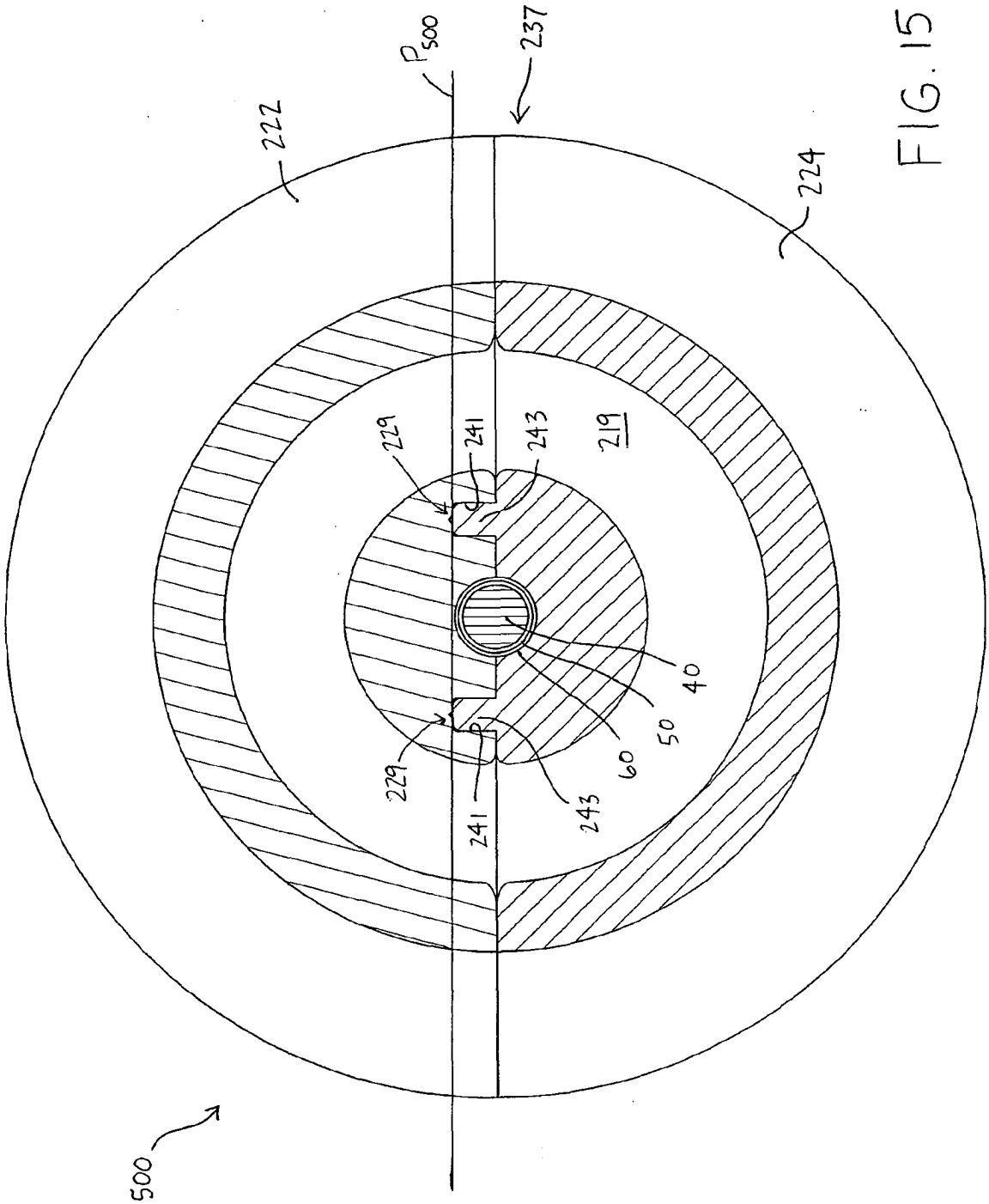

FIG. 15

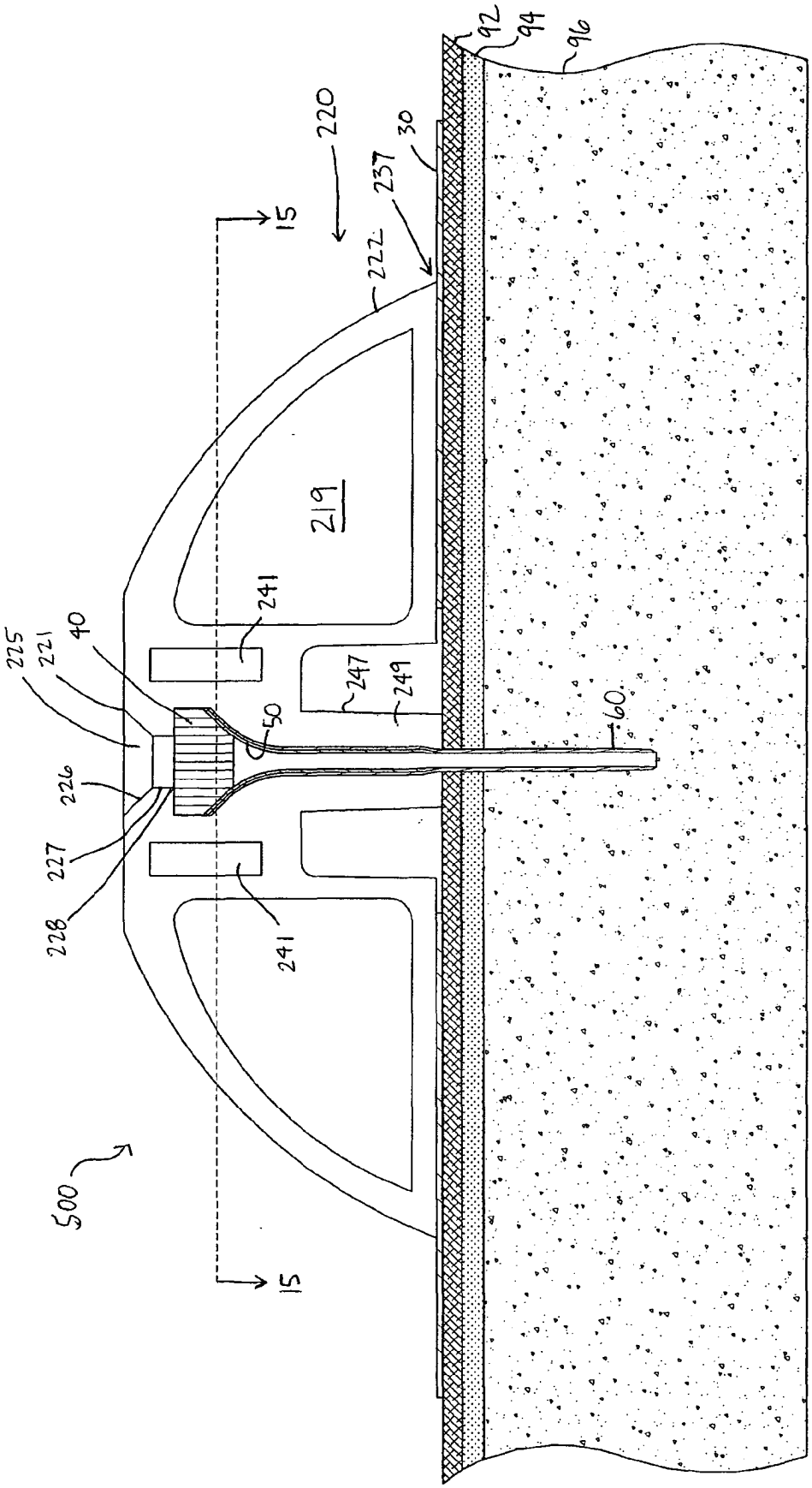
92
94
96
220
30
237
15
222
219
241
225
221
40
247
249
50
60
226
227
228
241
500
15

FIG. 16

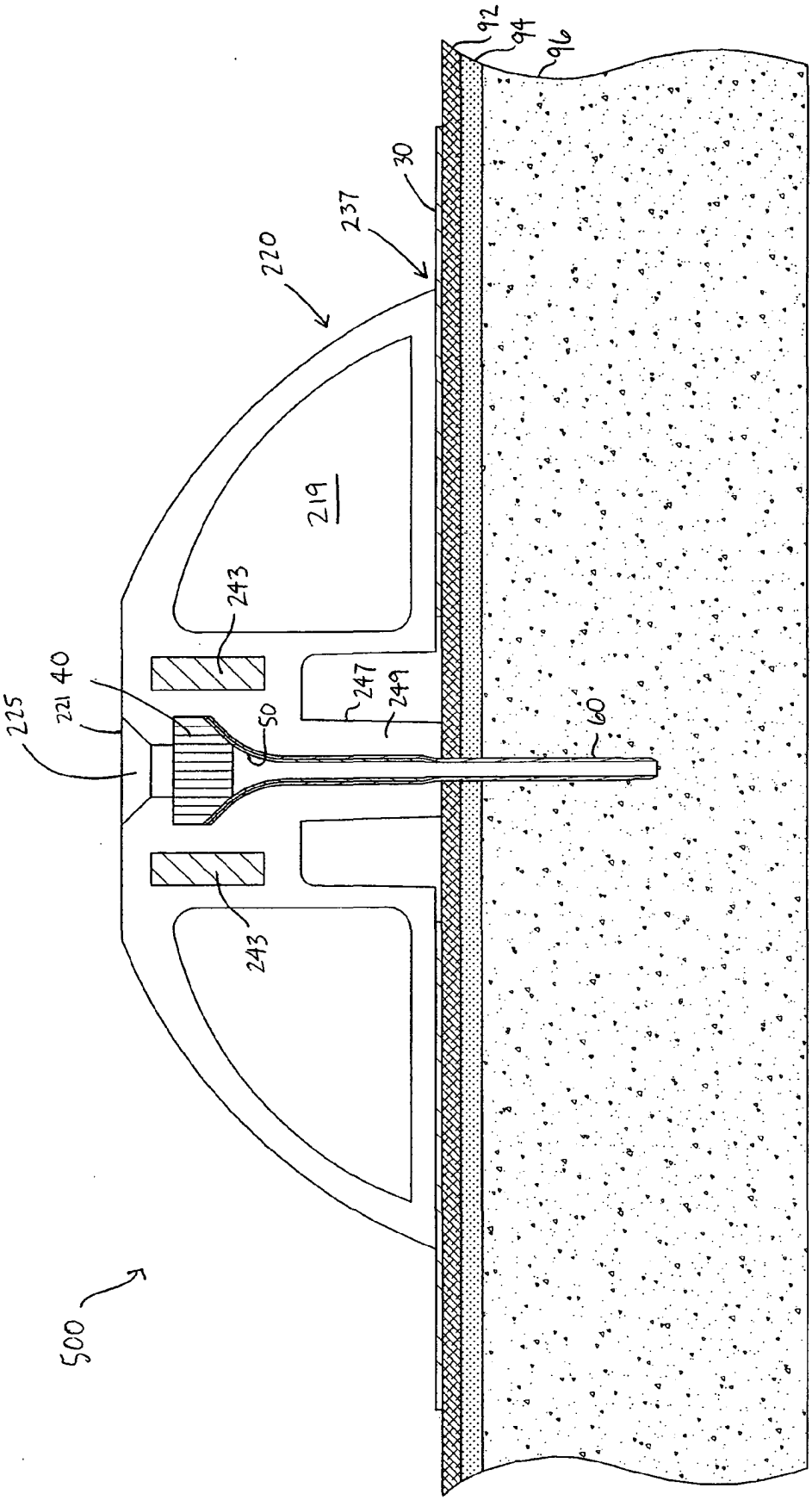

FIG. 17

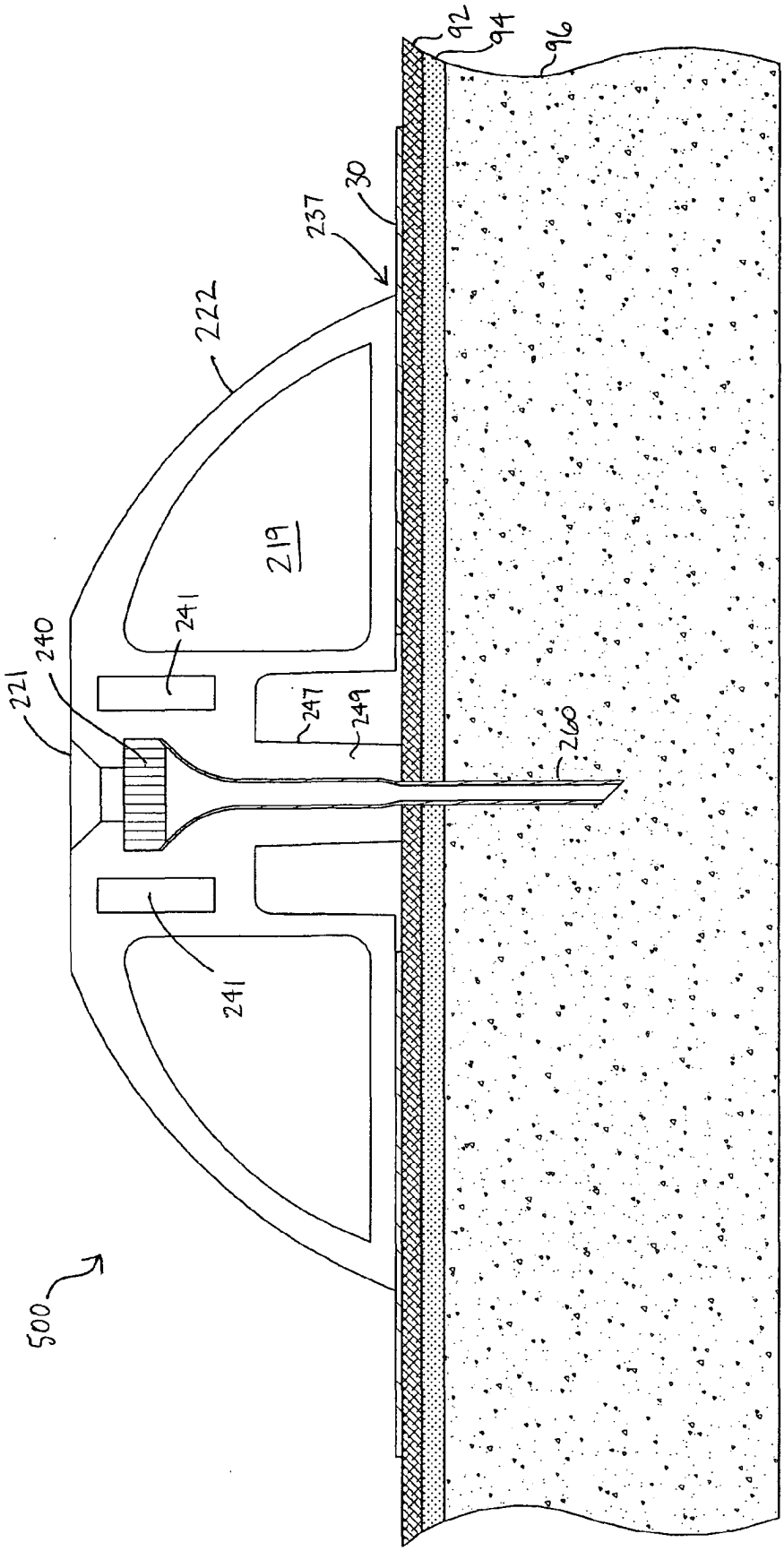

FIG. 18

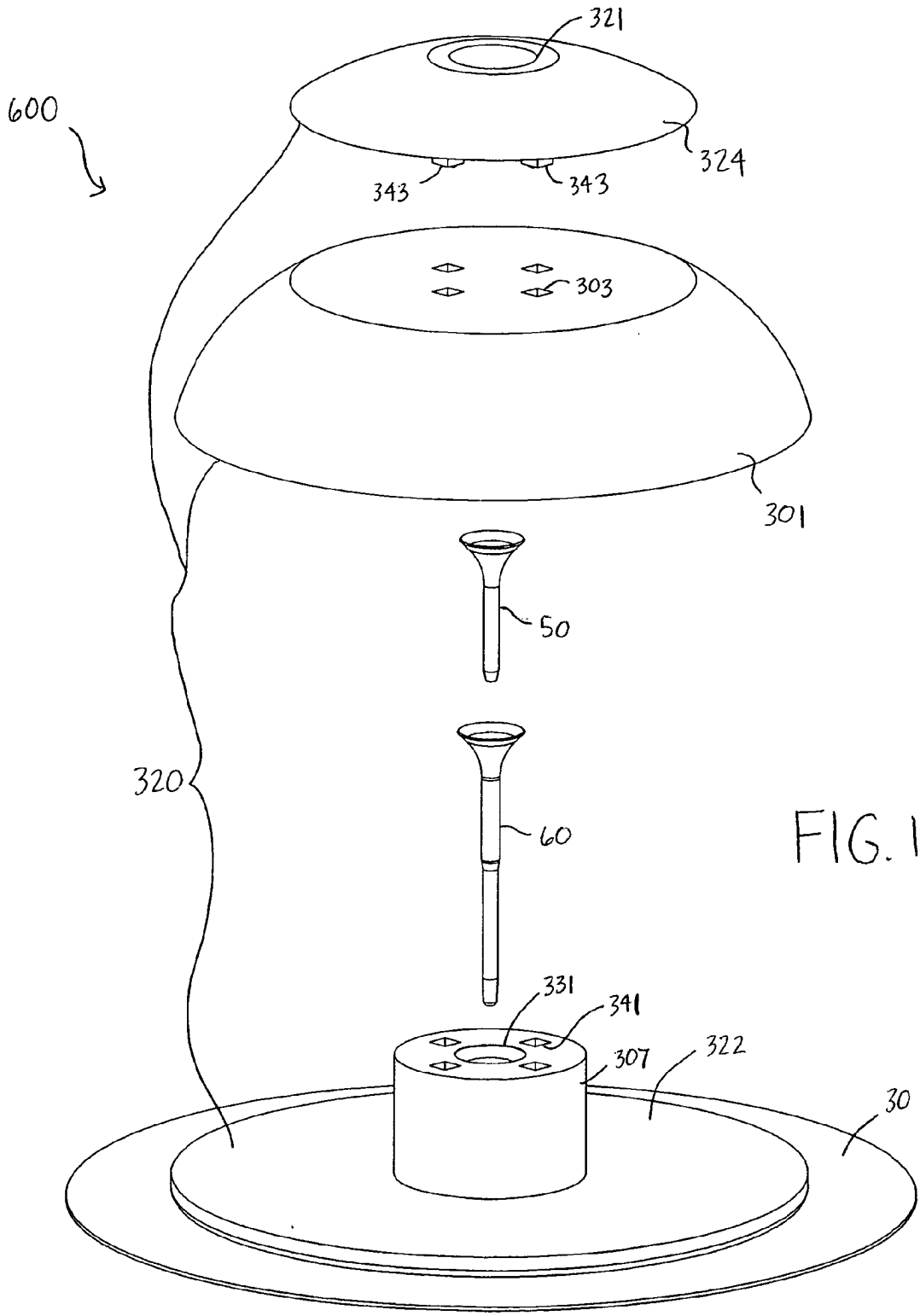

FIG. 19

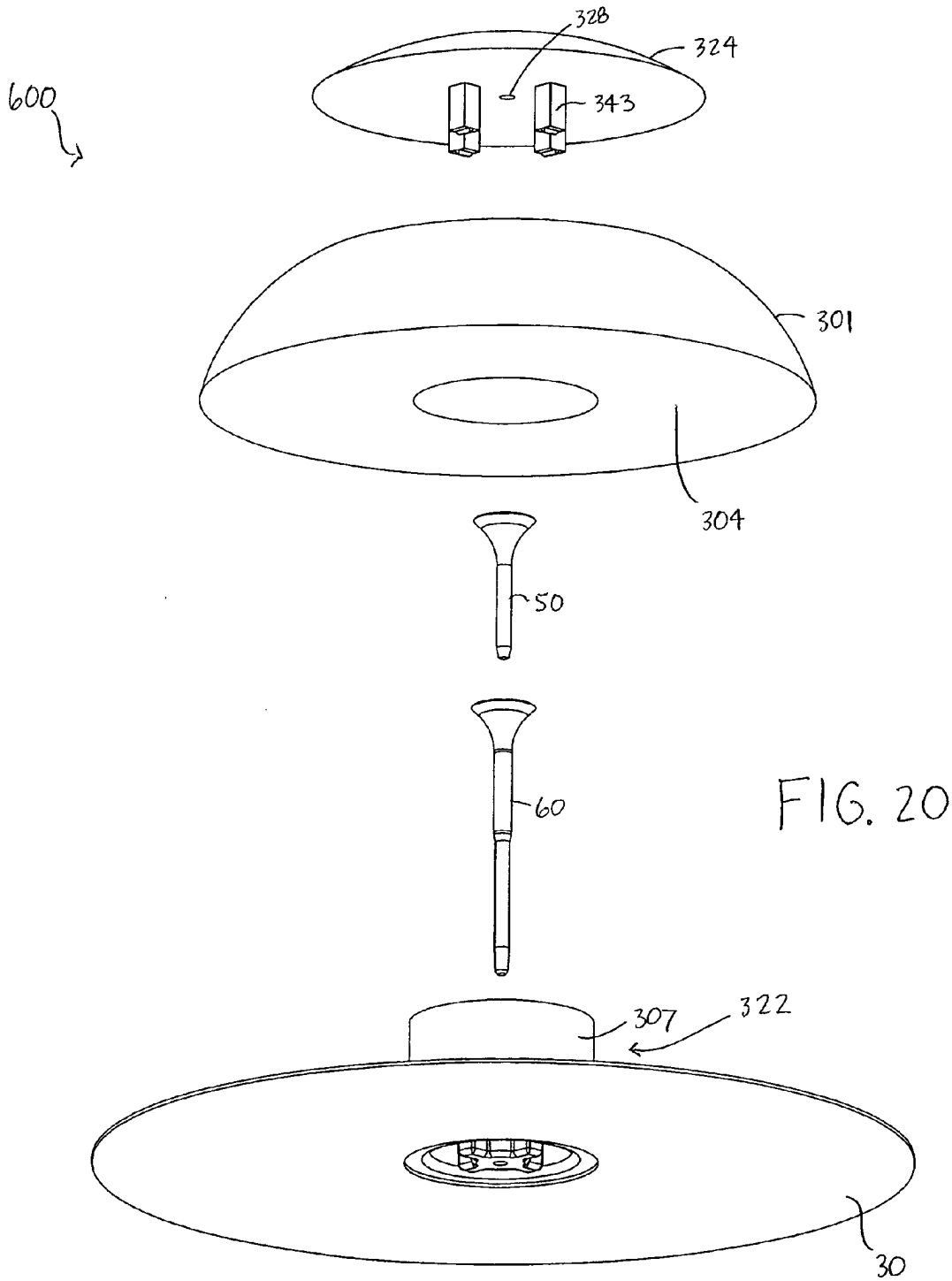

FIG. 20

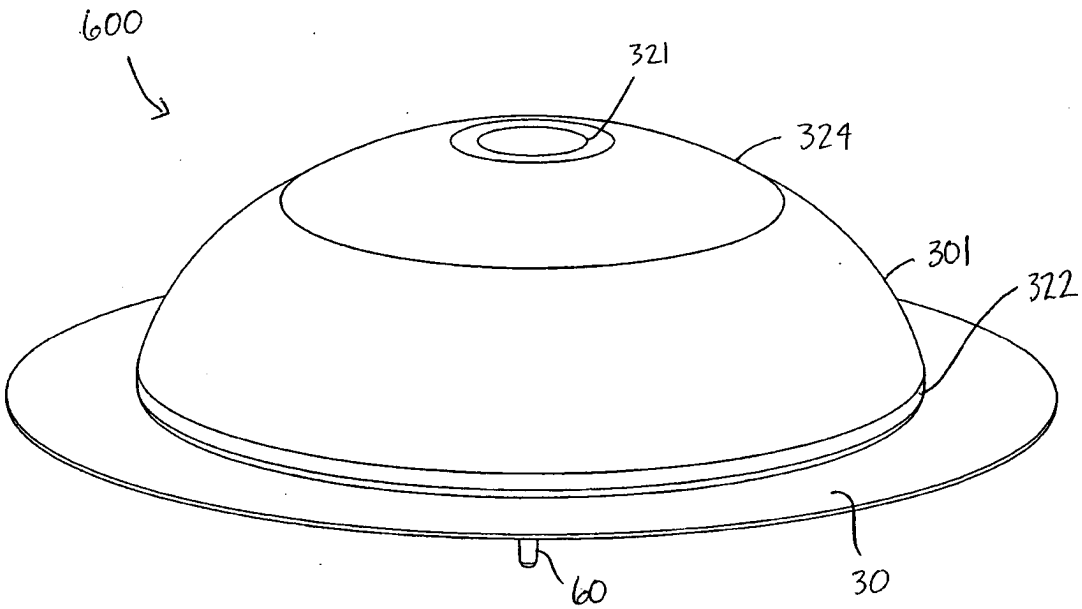

FIG. 21

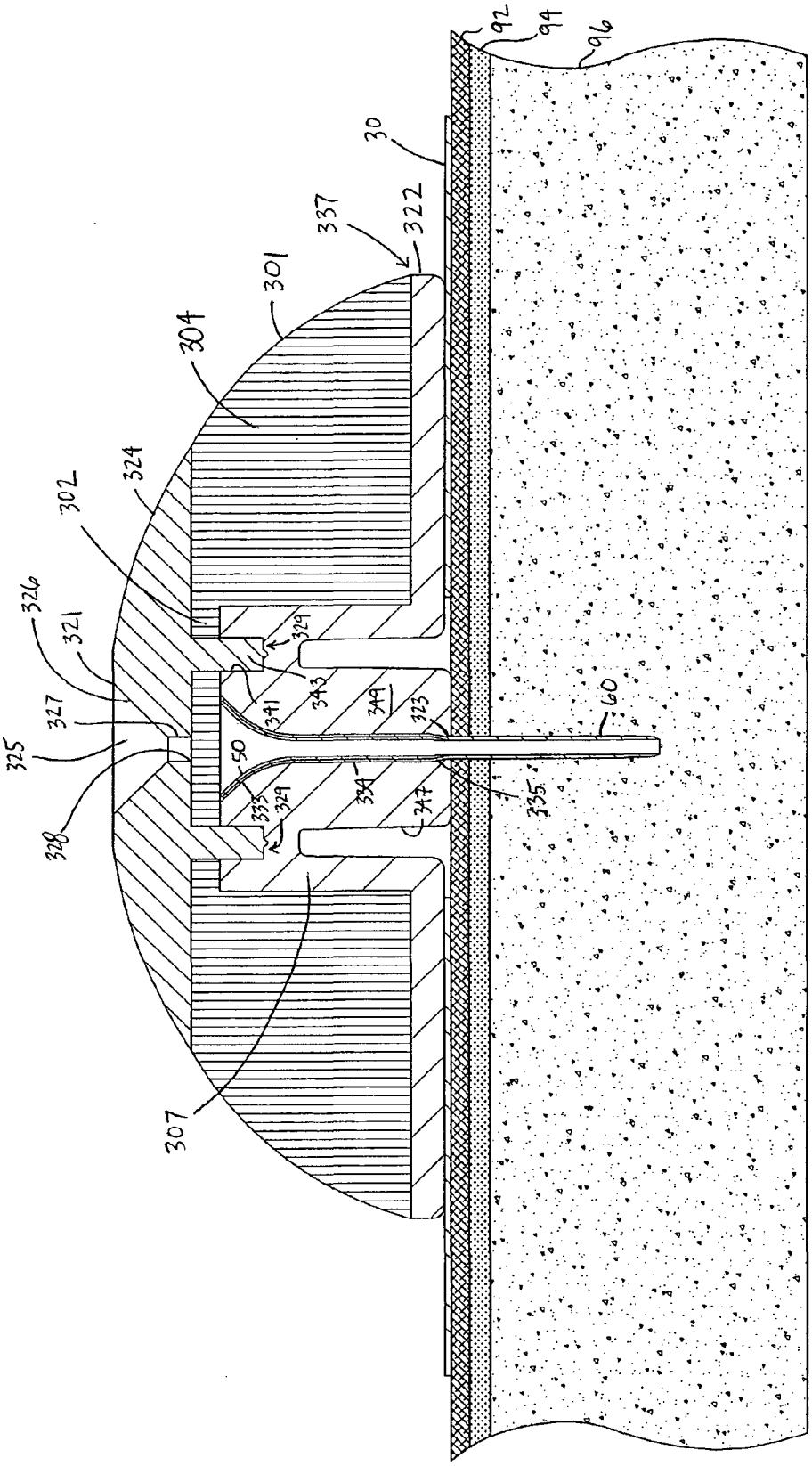
92
94
96
30
337
322
301
304
324
302
326
321
327
325
328
329
341
343
349
323
60
50
333
329
334
347
335
307

FIG. 22

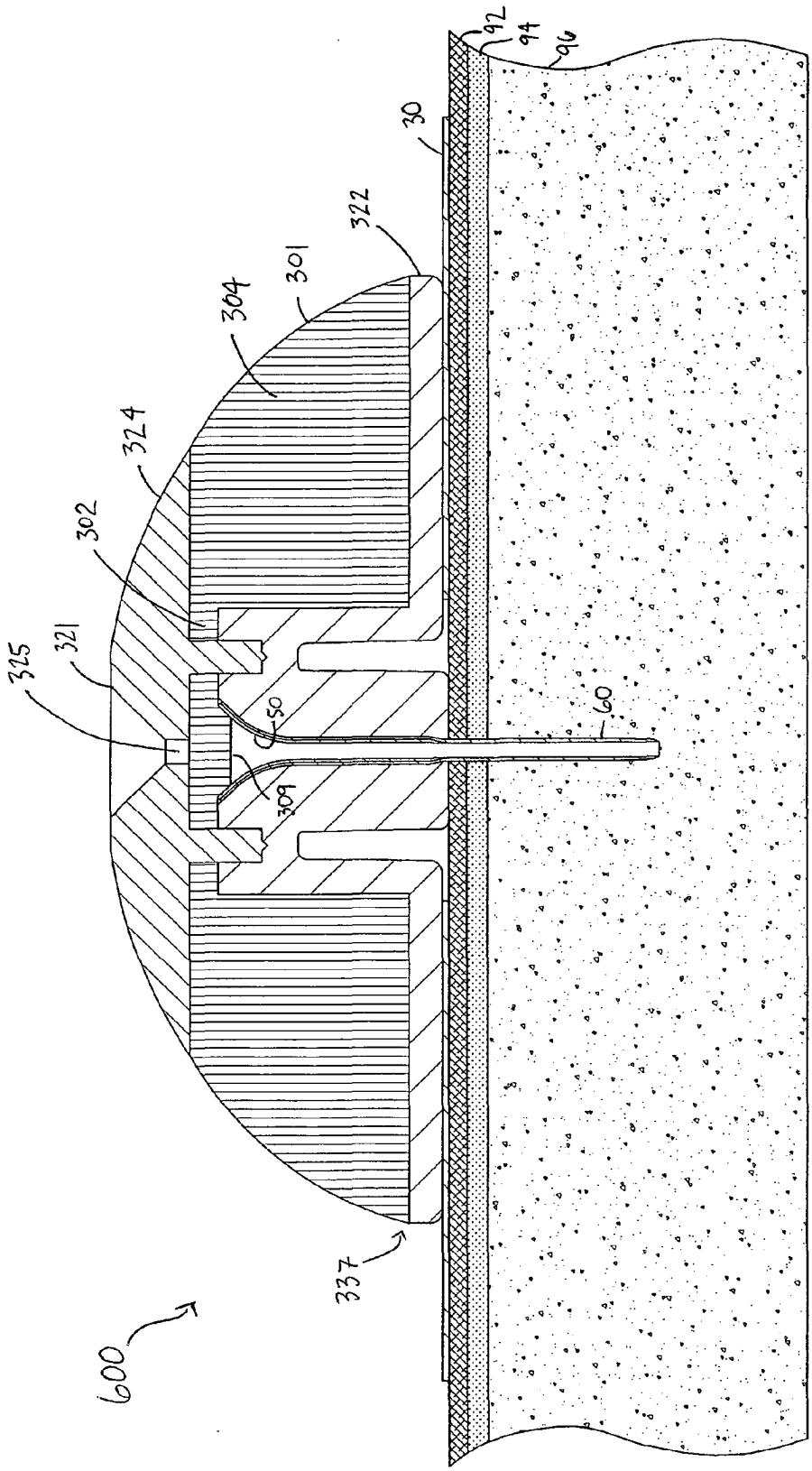

FIG. 23

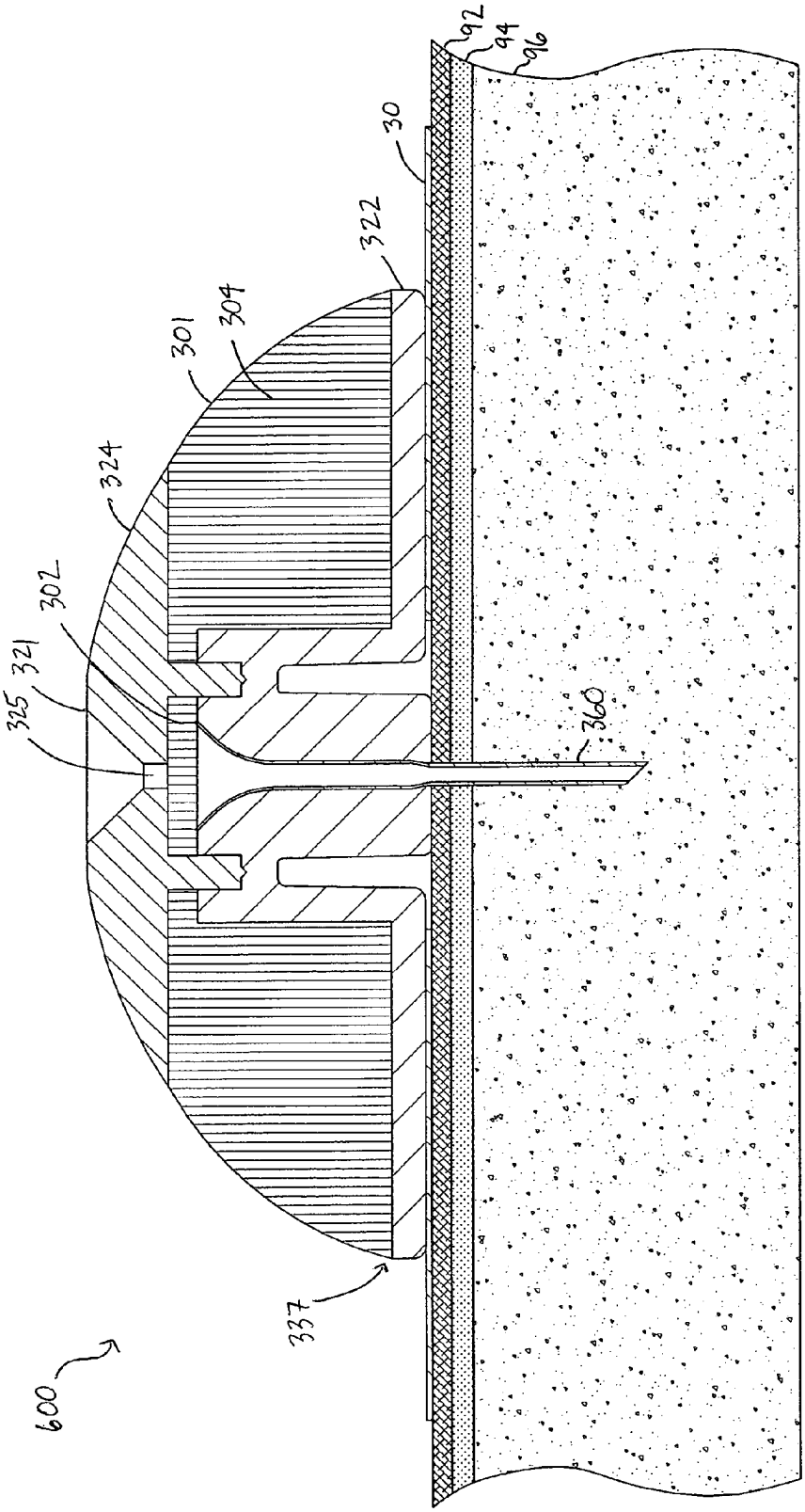

FIG. 24

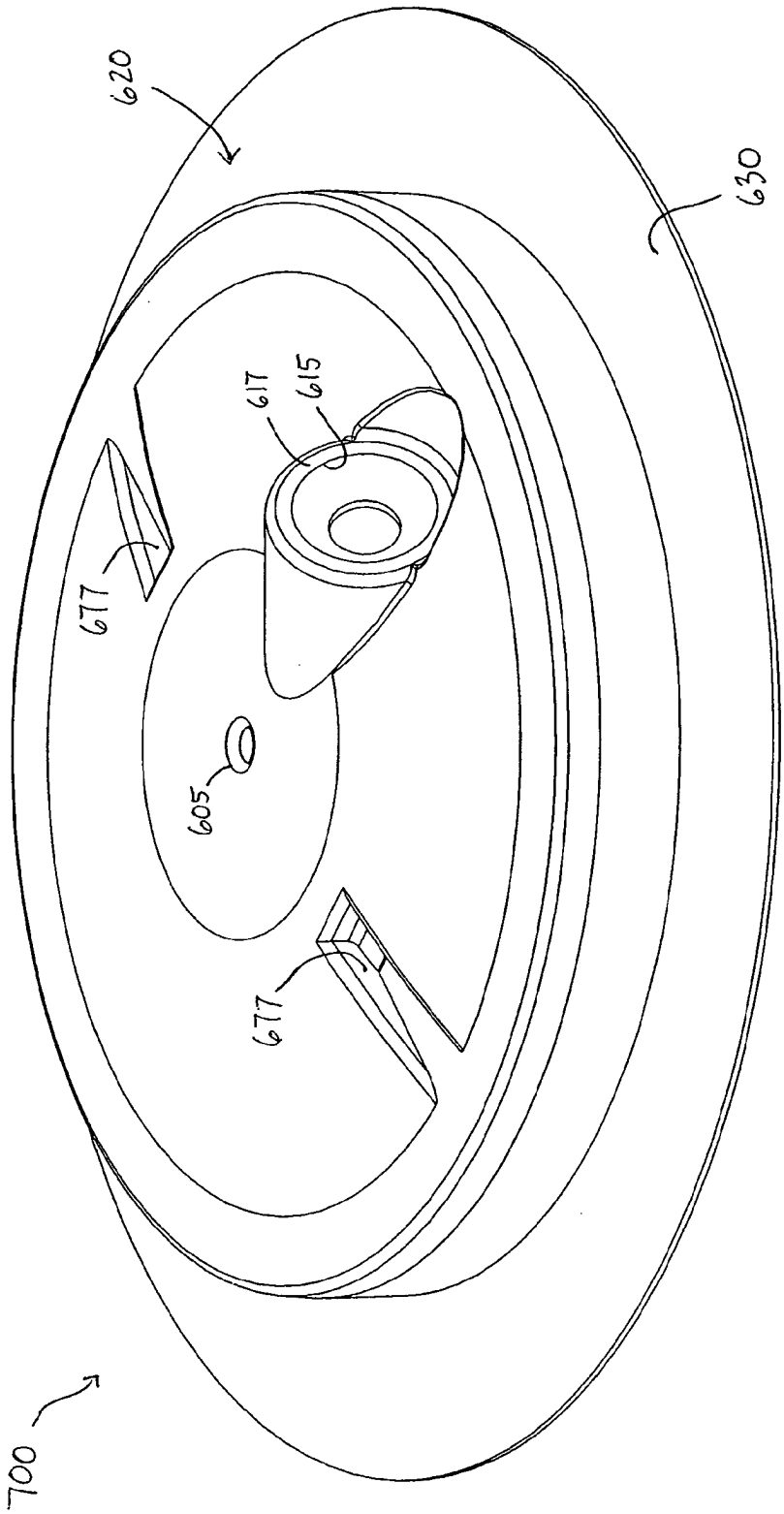

FIG. 25

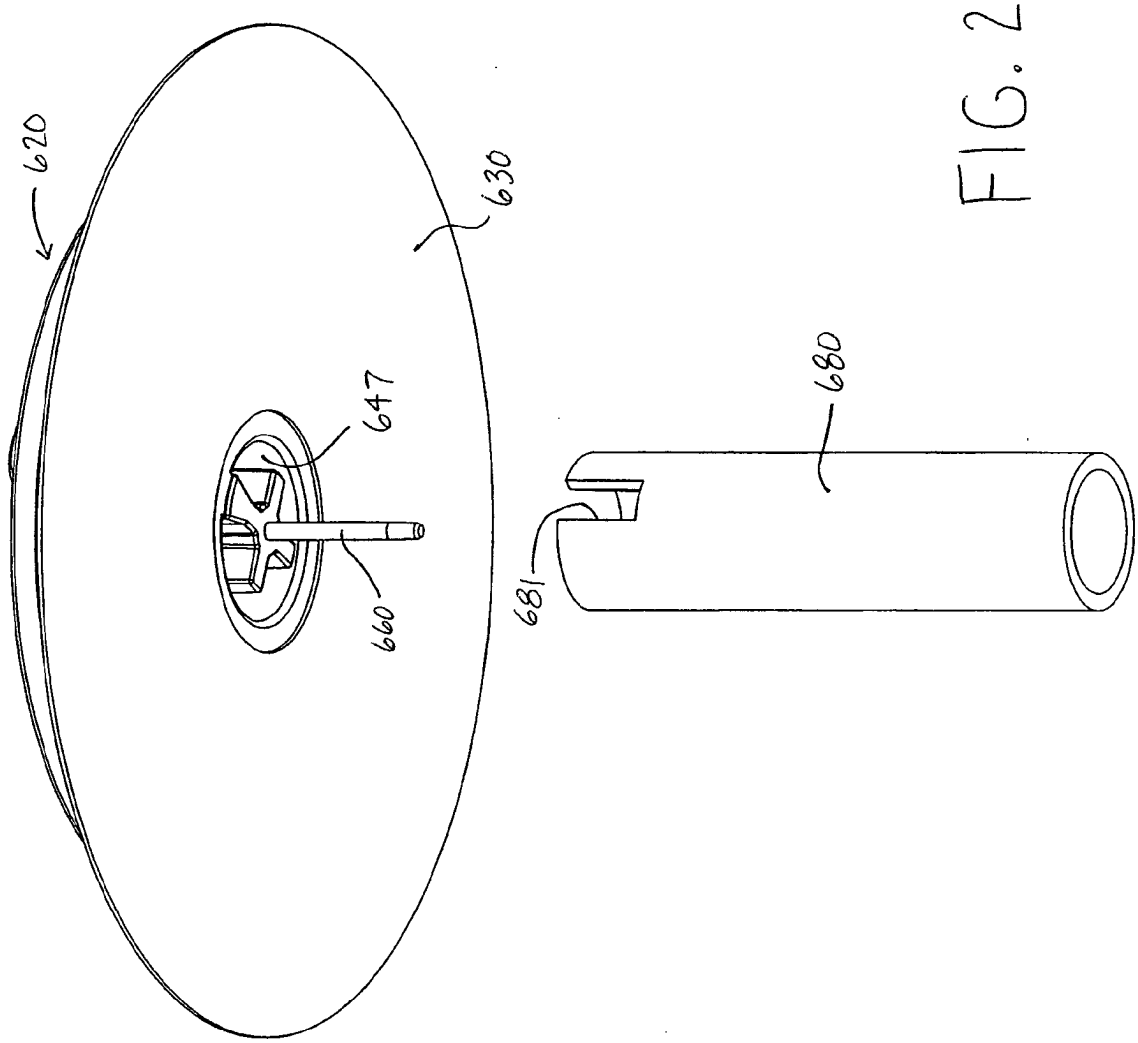

FIG. 26

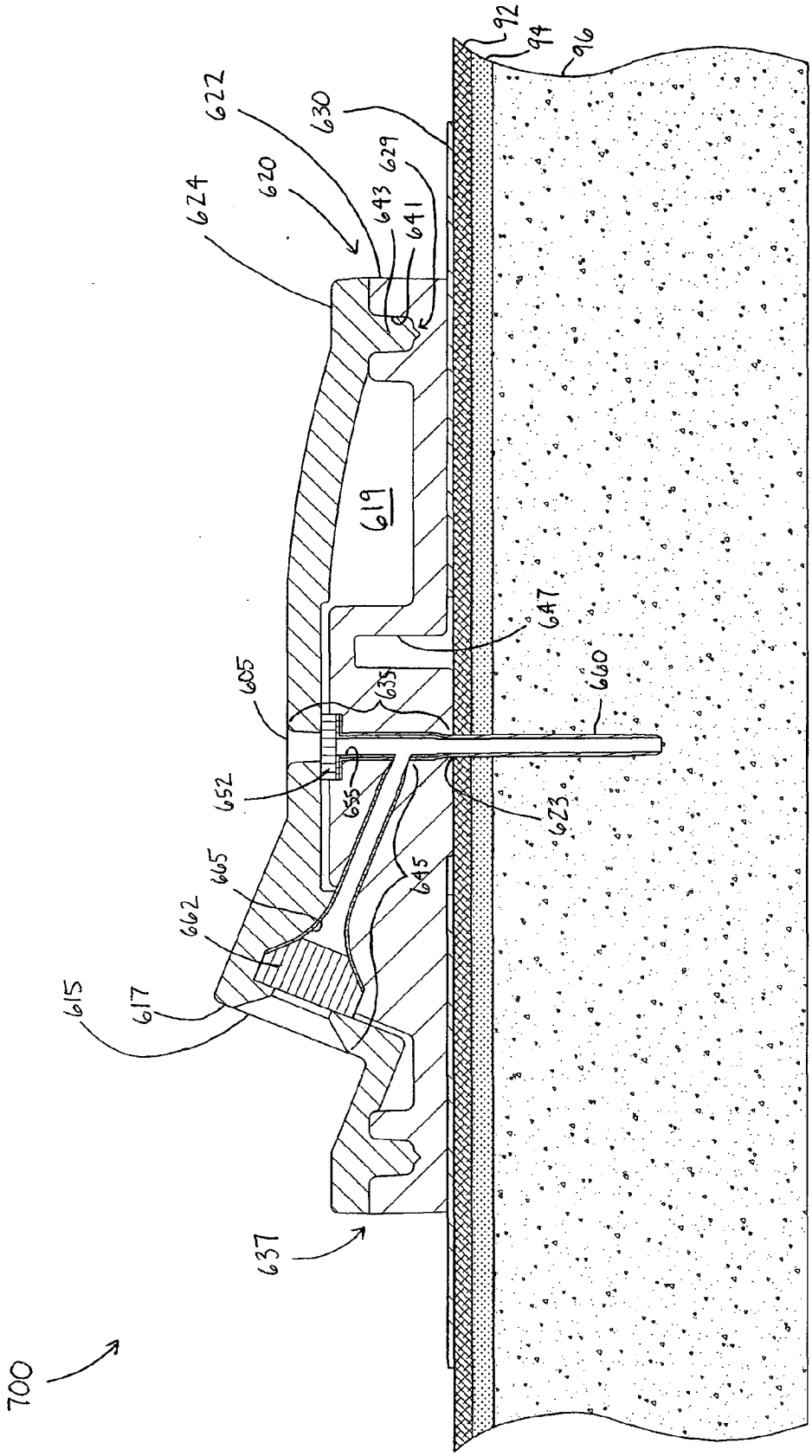
92
94
96
630
622
620
624
629
643
641
619
647
605
635
660
652
655
623
665
645
662
615
617
637
700

FIG. 27

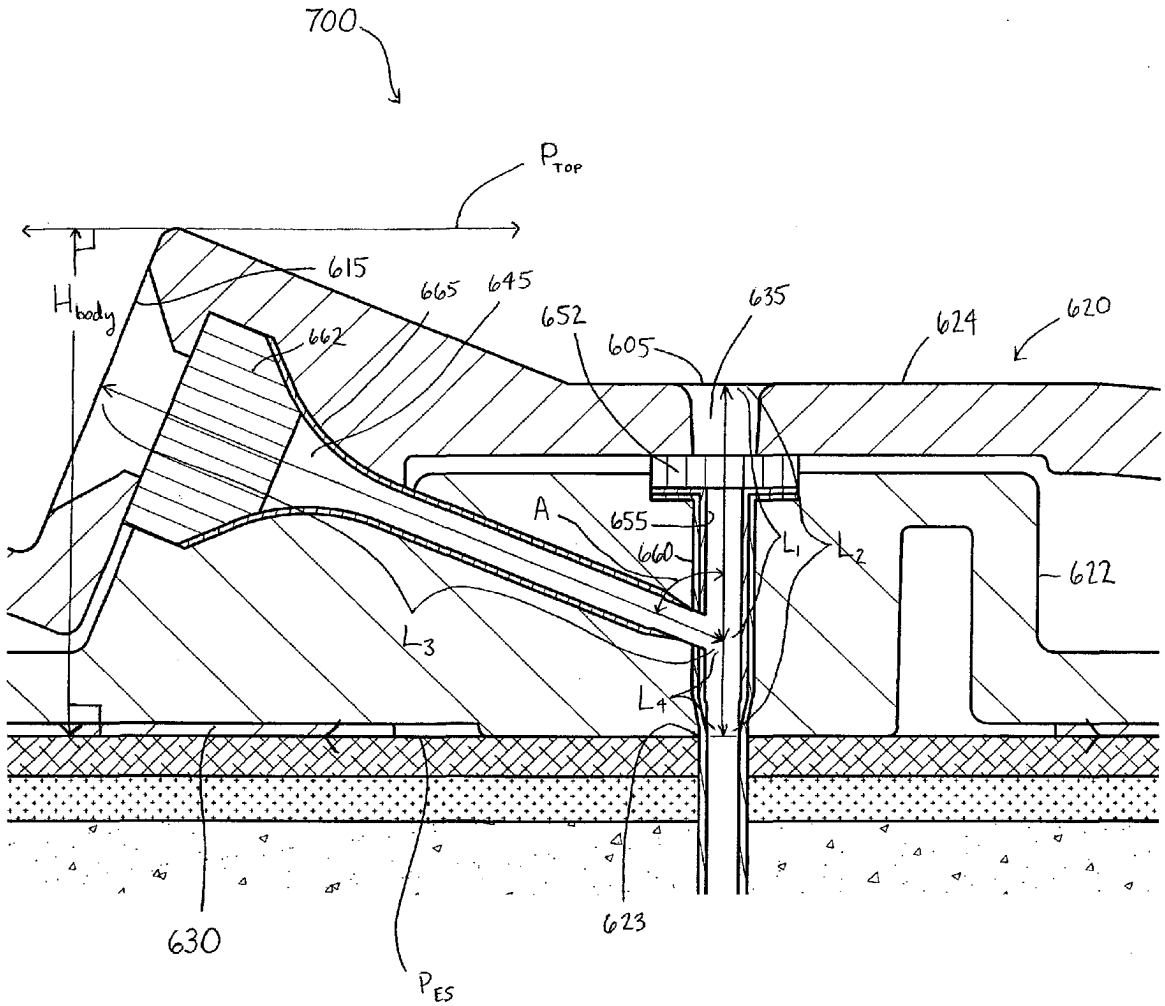
700
P_{TOP}
H_{body}
615
665
645
662
652
605
635
624
620
A
655
660
L_1
L_2
622
L_3
L_4
630
623
P_{ES}

FIG. 28

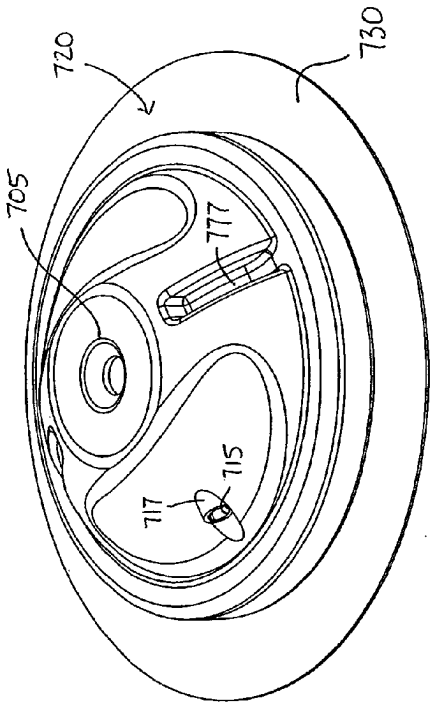

FIG. 29

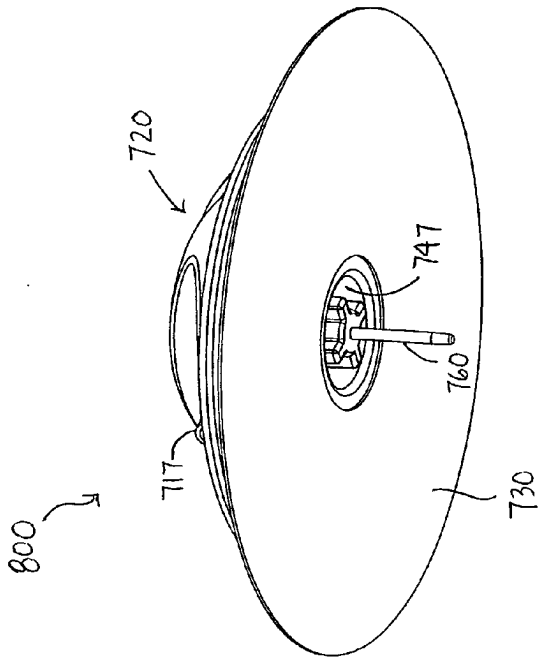

FIG. 30

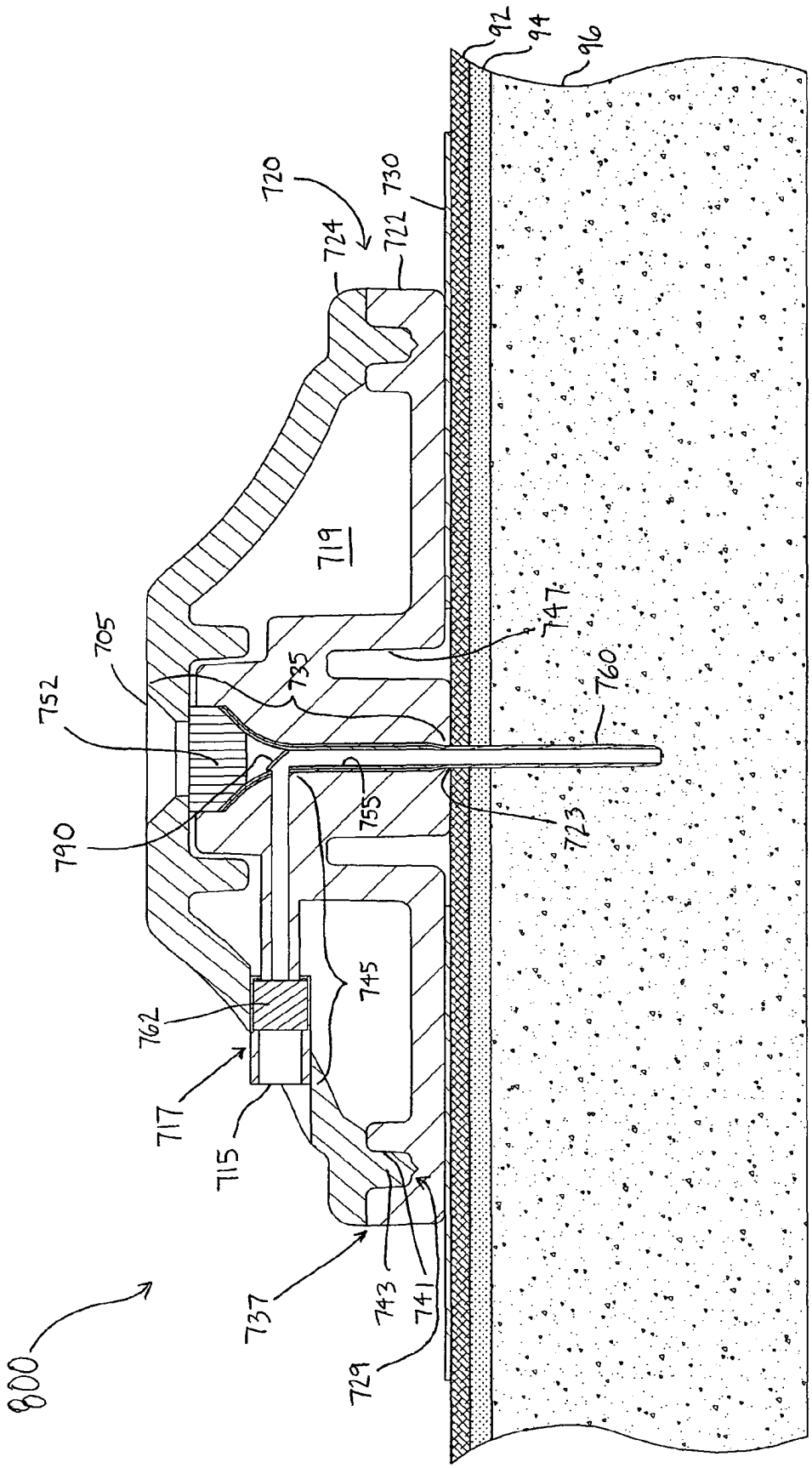
92
94
96
720
730
724
722
719
747
705
735
752
760
790
755
723
745
762
717
715
737
743
741
729
800

FIG. 31

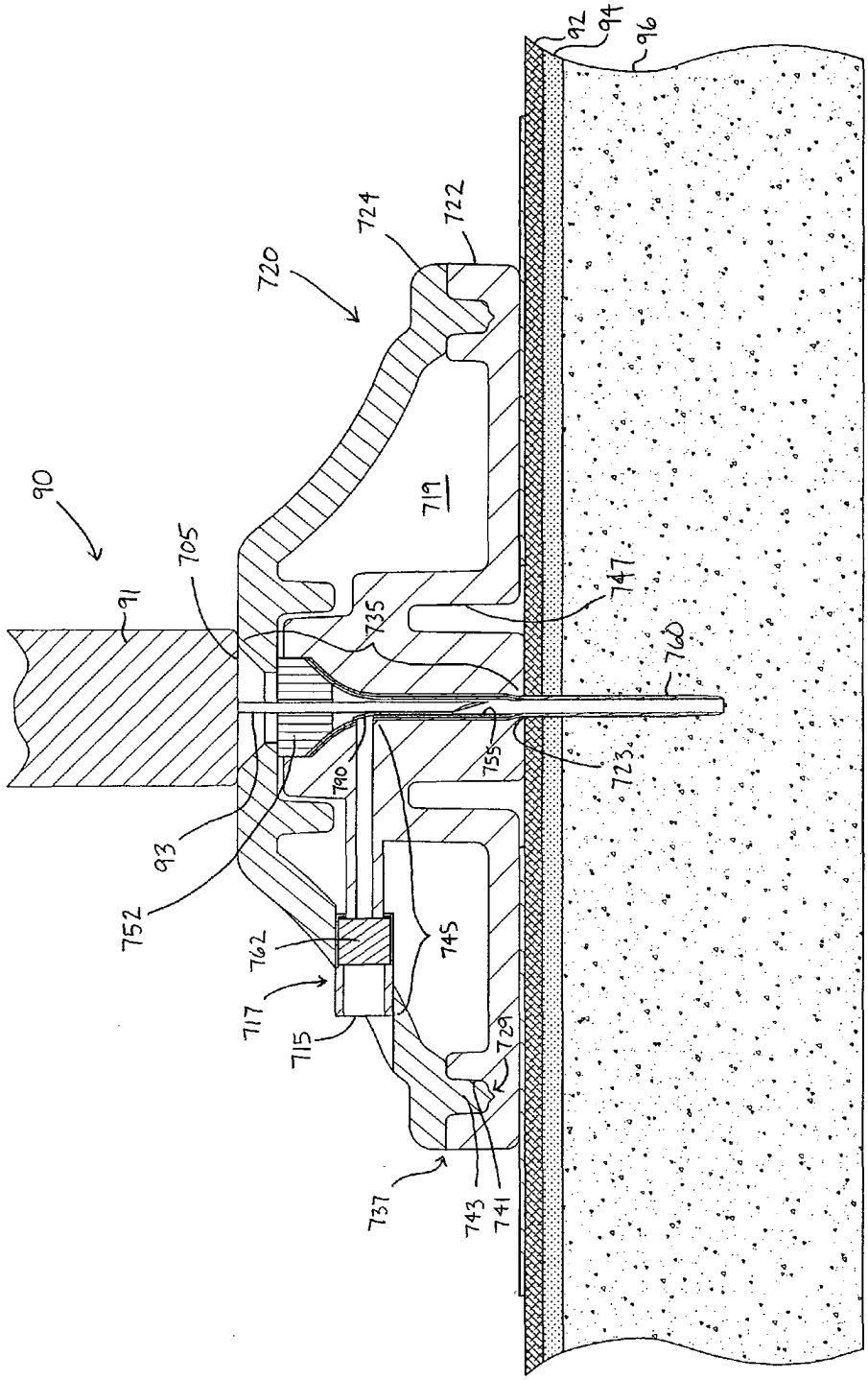
90
91
705
720
724
722
719
92
94
96
735
747
760
755
723
790
93
752
762
745
717
715
729
737
743
741

FIG. 32

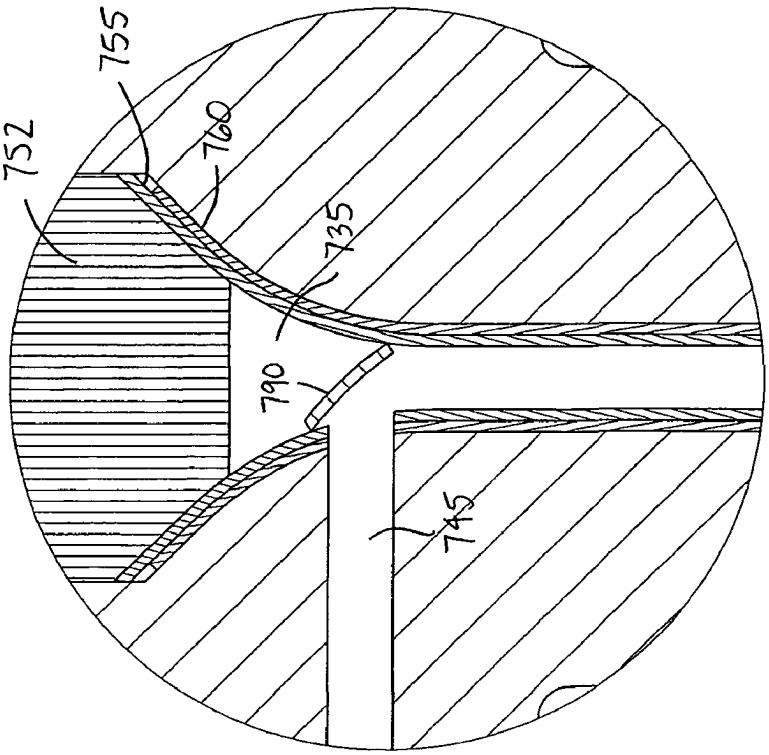

FIG. 34

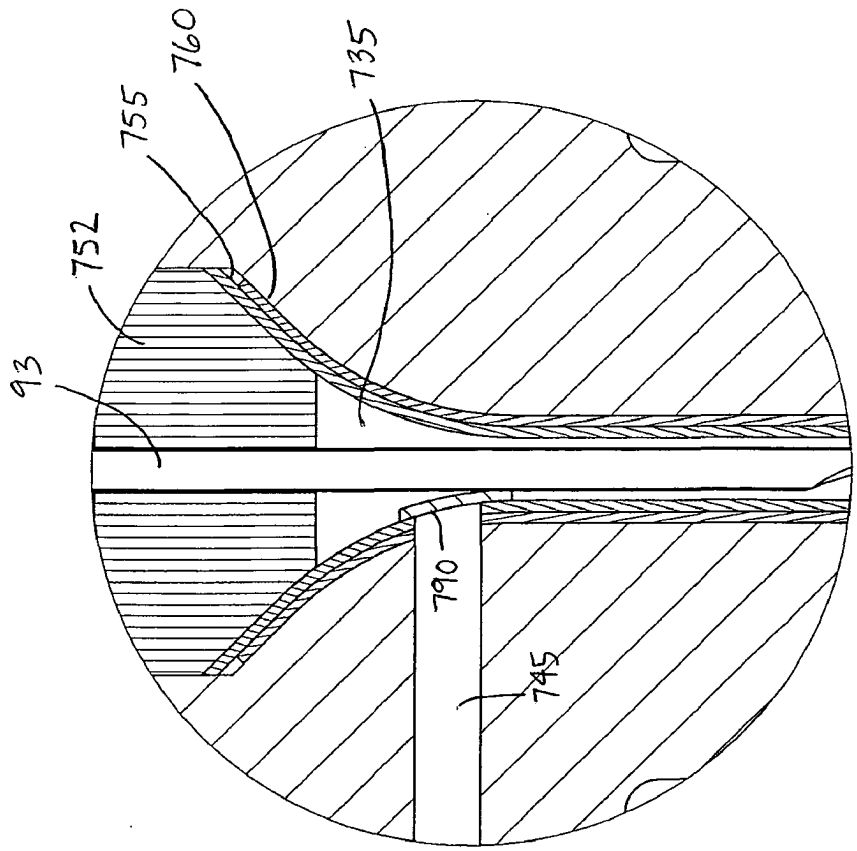

FIG. 33

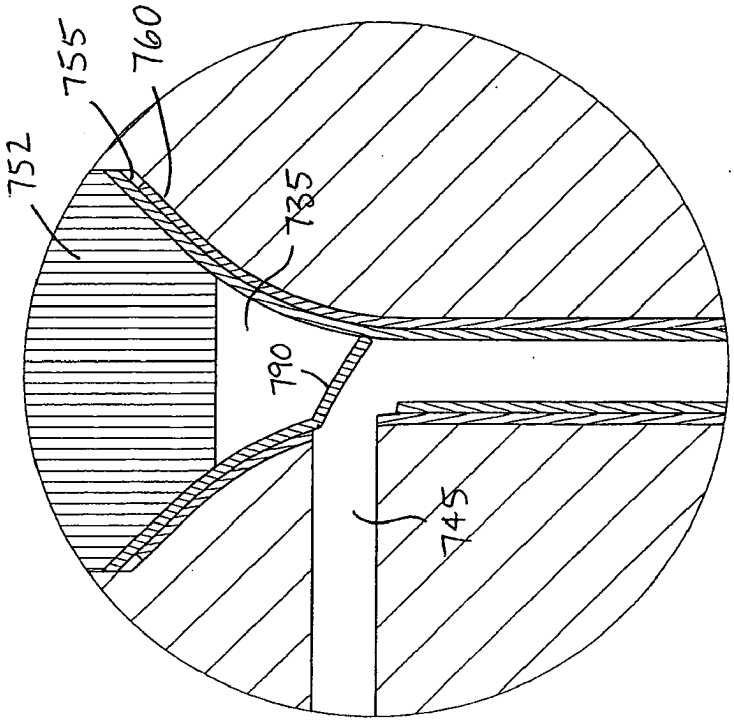

FIG. 36

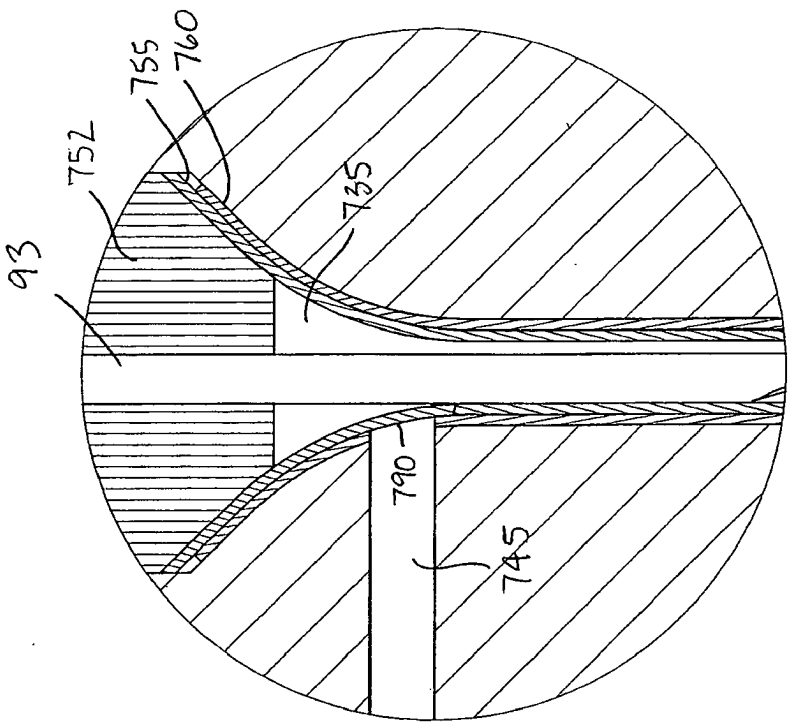

FIG. 35

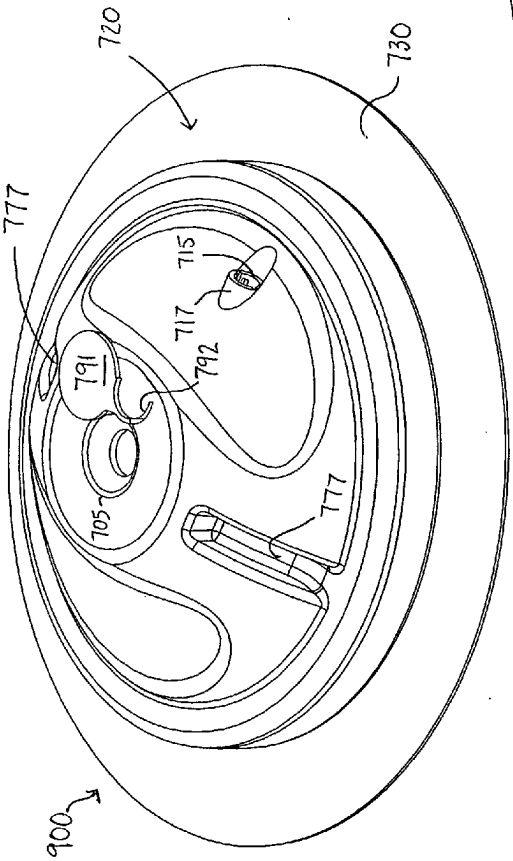
900
720
730
777
715
717
791
792
705
777

FIG. 37

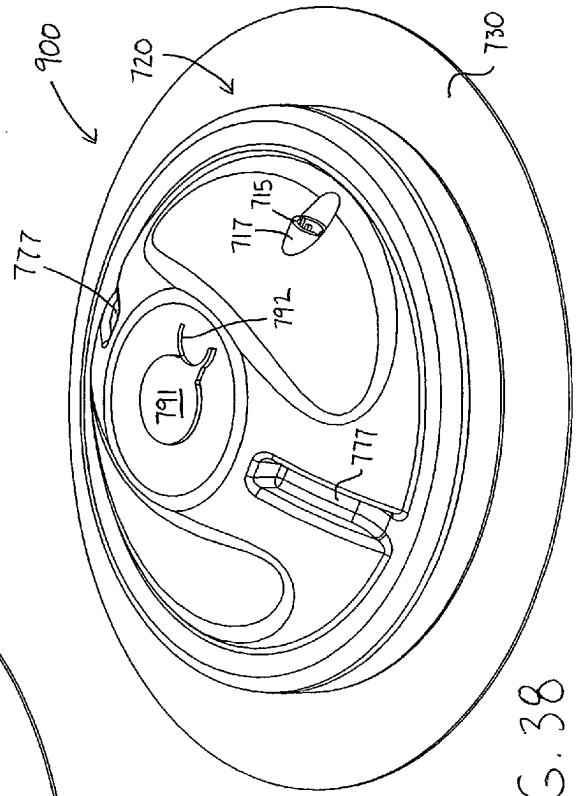
900
720
730
777
715
717
792
791
777

FIG. 38

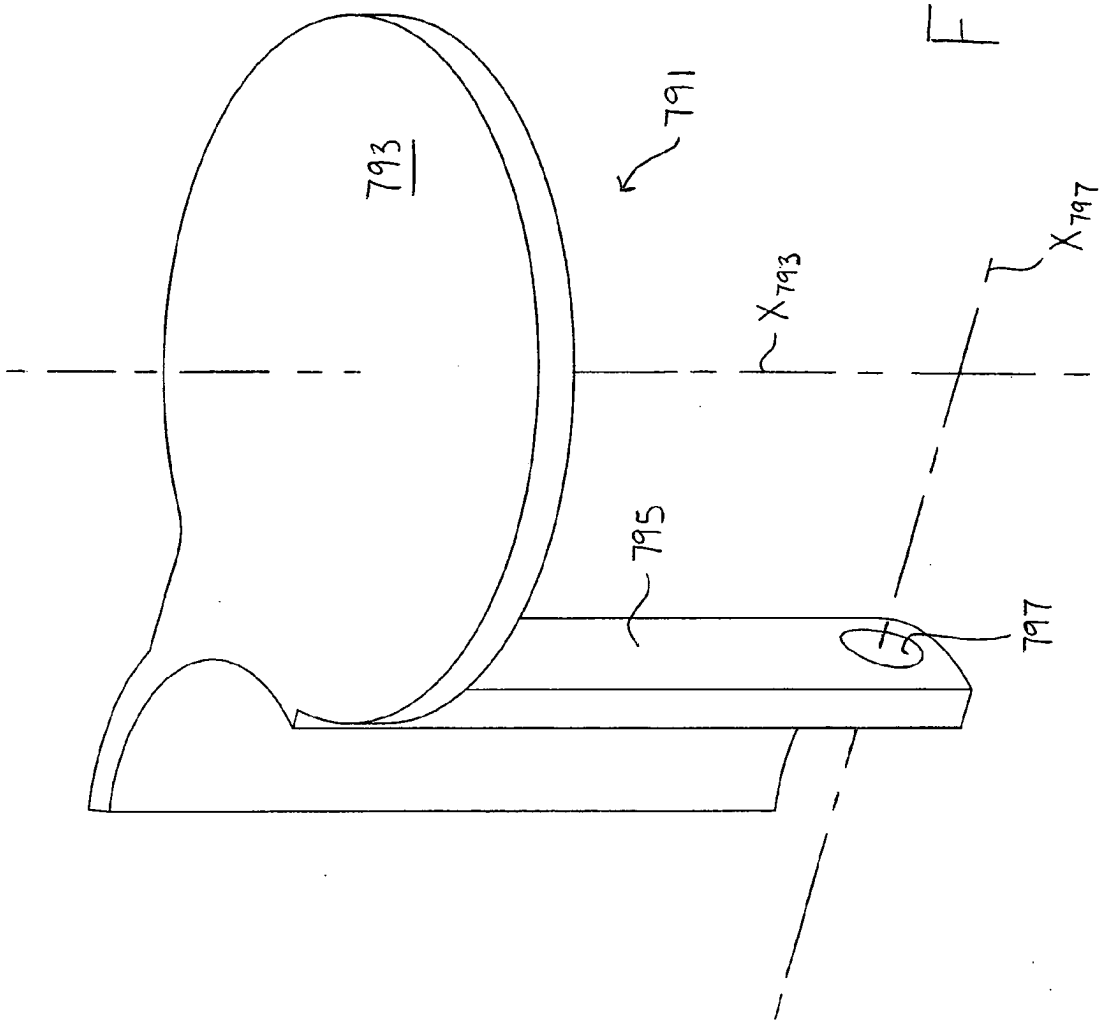

FIG. 39

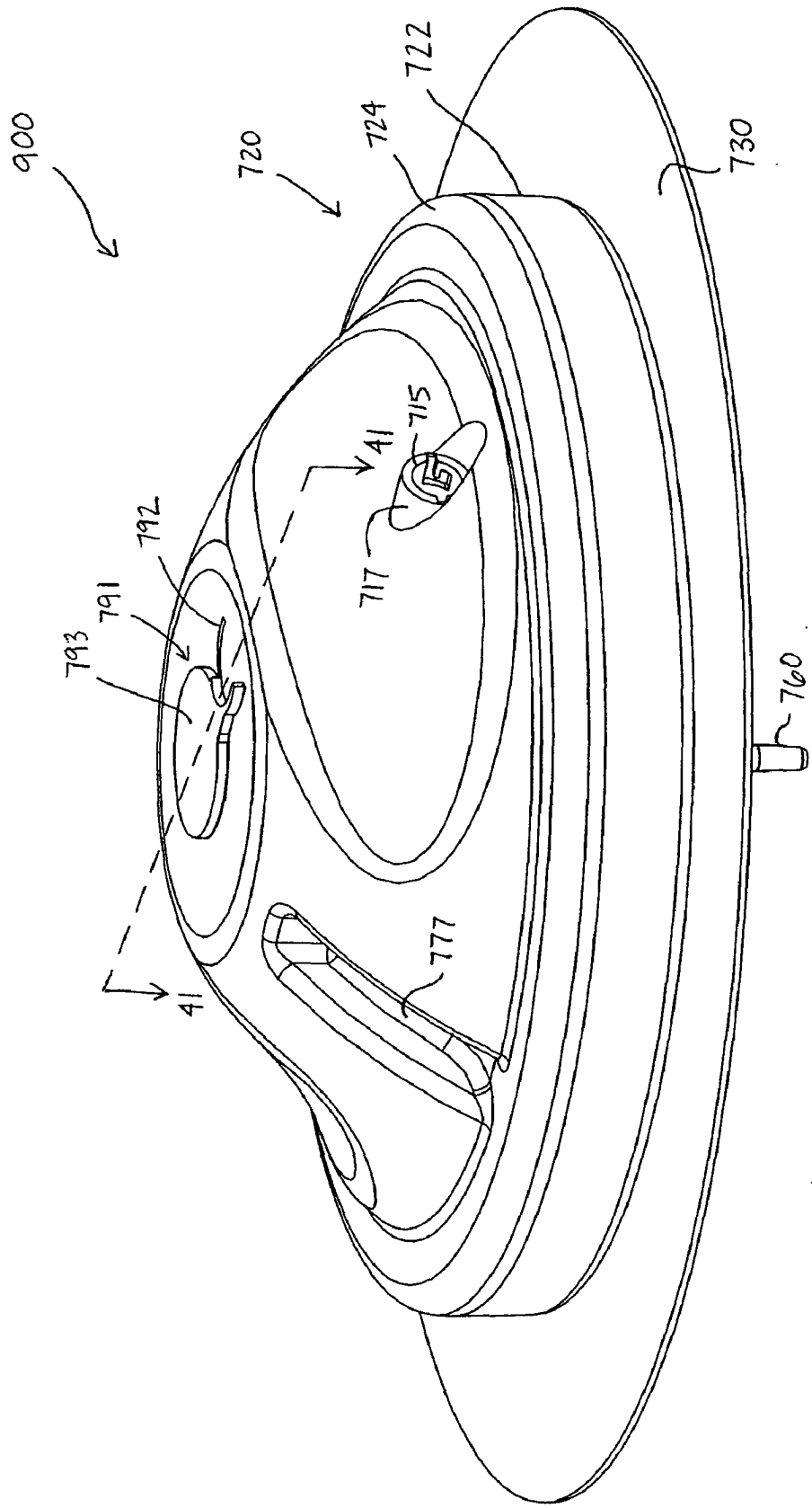

FIG. 40

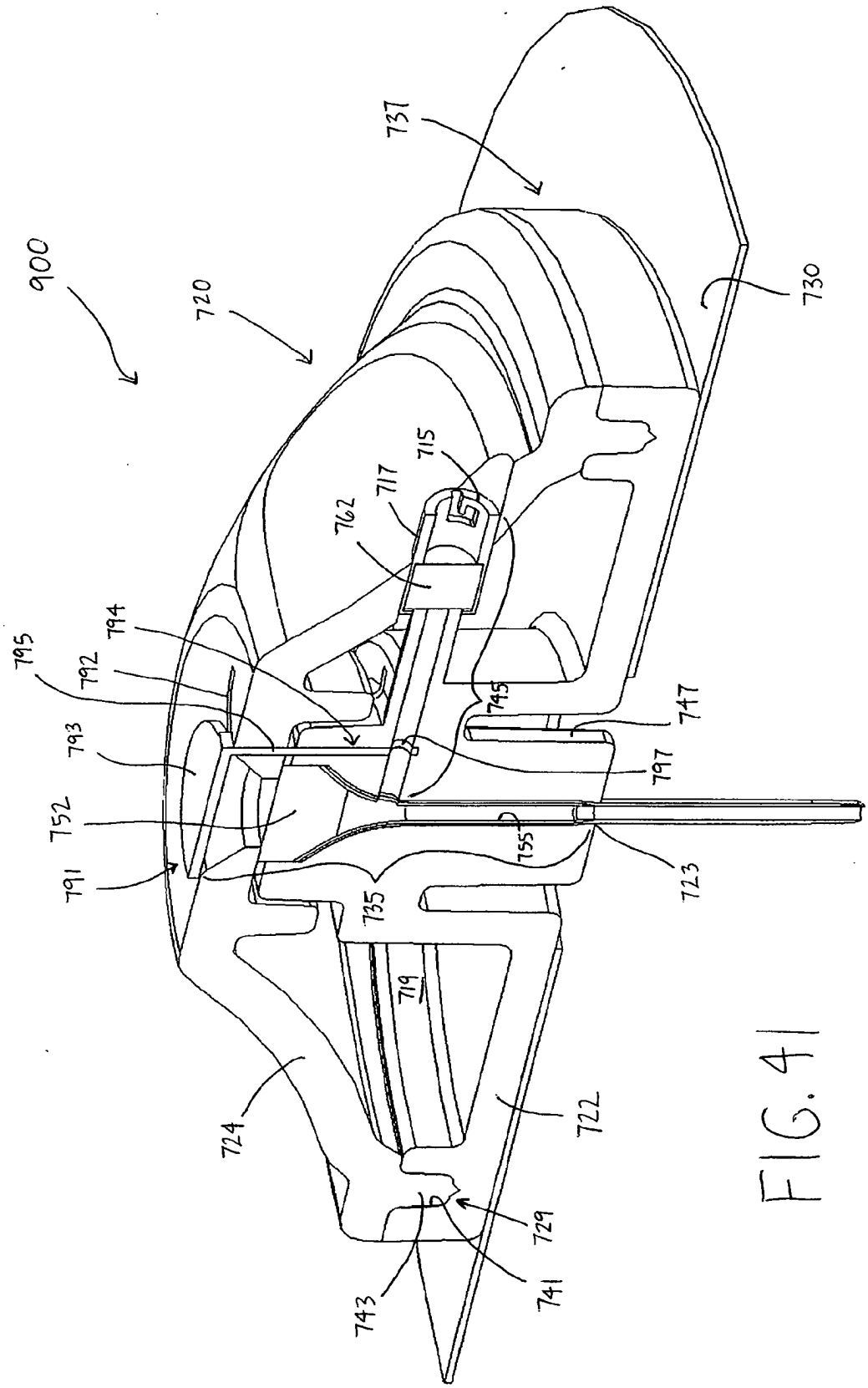
900
720
737
730
715
717
762
794
795
792
793
752
791
745
747
797
755
723
735
719
724
722
729
741
743

FIG. 41

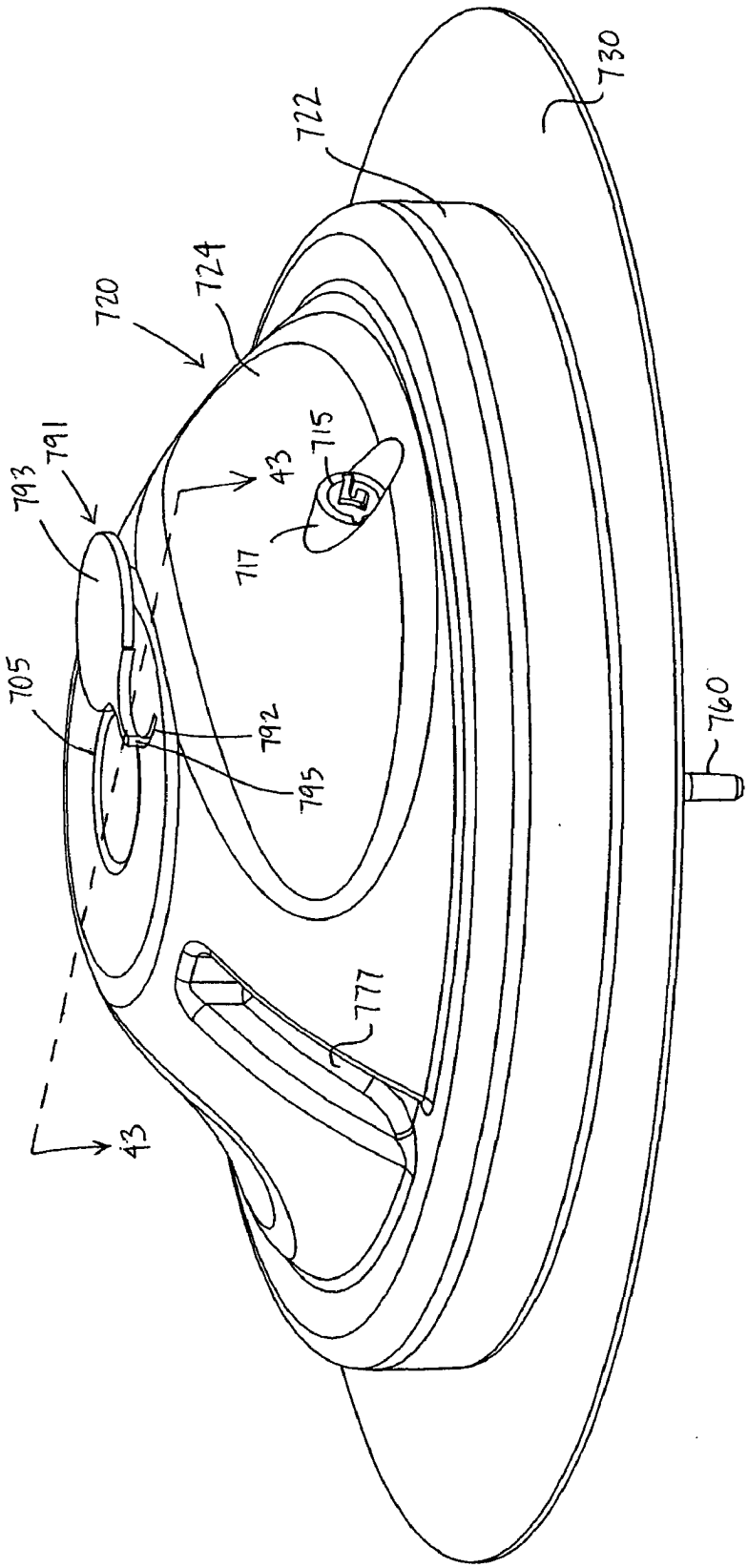

FIG. 42

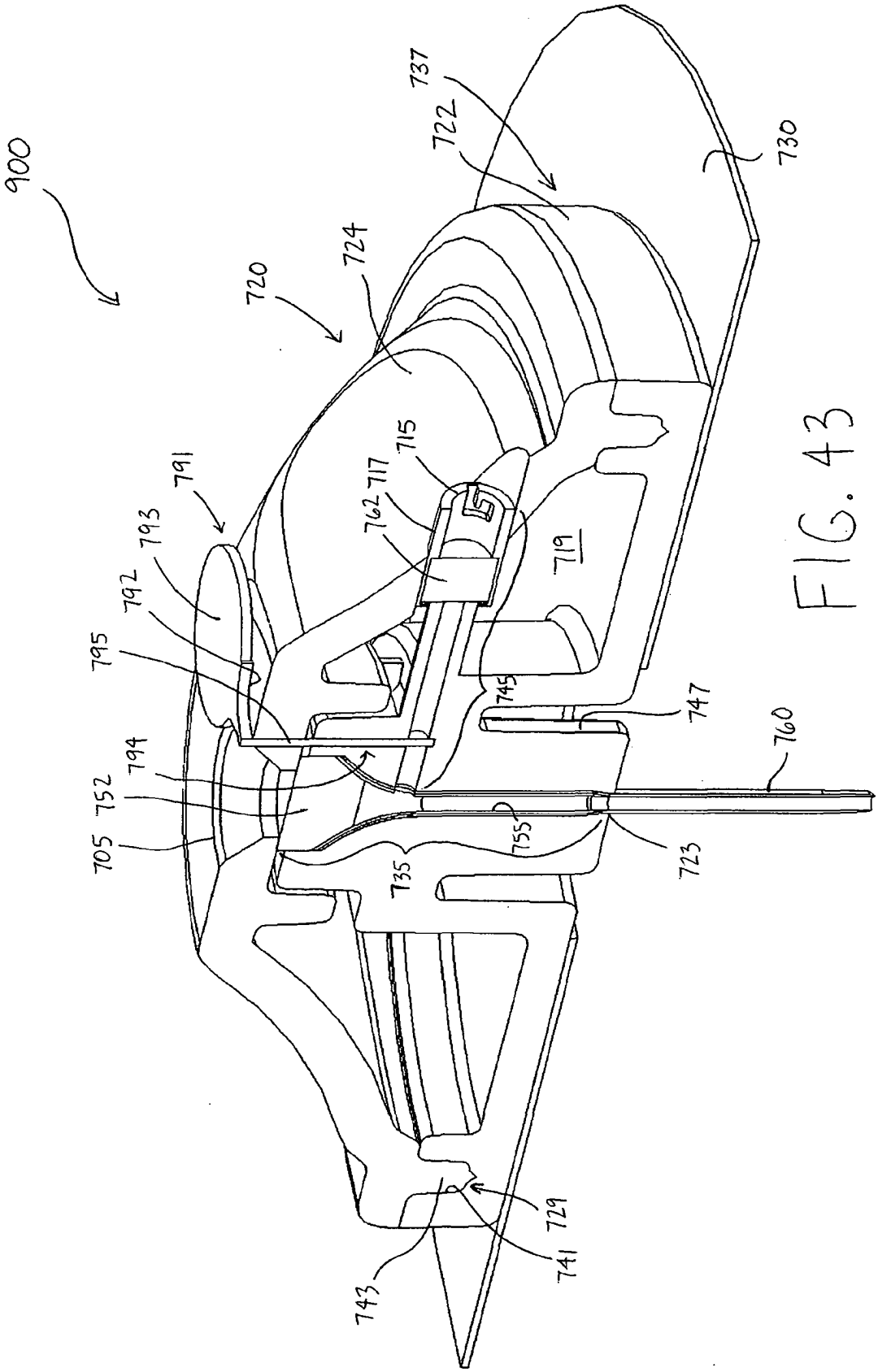
900
720
724
737
722
730
791
793
792
795
794
752
705
715
717
762
719
745
747
760
755
723
735
729
741
743

FIG. 43

FLUID DELIVERY DEVICES, SYSTEMS AND METHODS

CROSS-REFERENCE(S) TO RELATED APPLICATION(S)

[0001] This application claims priority to U.S. Provisional Patent Application Ser. No. 60/733,311 filed Nov. 3, 2005. This provisional application is expressly incorporated by reference.

BACKGROUND OF THE INVENTION

[0002] 1. Field of the Invention

[0003] The invention relates generally to devices that can be inserted in and attached to a living being for the purpose of facilitating the introduction of a fluid, such as medicine, into the living being. The invention also relates to systems that include one or more such devices, and to methods of delivering fluid into a living being.

[0004] 2. Description of Related Art

[0005] Examples of devices that can be used to deliver fluids to a living being include: U.S. Pat. Nos. 4,755,173; 4,966,588; 5,968,011; 6,017,328; 6,056,718; 6,074,371; 6,685,674; 6,736,797; U.S. Patent Application Pub. Nos. 2002/0072720; 2004/0006316; 2005/0101910; 2005/0107743; and abandoned Ser. No. 09/110,360 (incorporated by reference in U.S. Pat. No. 6,074,371).

SUMMARY OF THE INVENTION

[0006] Some embodiments of the present fluid delivery devices, systems and methods may be used to deliver fluid such as insulin to users such as people with diabetes. Some embodiments of the present fluid delivery devices may be configured to be worn for an extended period of time (e.g., multiple days) and allow a user to inject a fluid (such as a physician-prescribed drug) into the user's body without the need to repeatedly puncture the user's skin with a needle. The present fluid delivery devices, systems and methods include many different features that distinguish them from prior devices, and certain of those features are different in many ways from the features of prior devices. Different embodiments of the present fluid delivery devices, systems and methods include one or more of these features, which are interchangeable between embodiments to the extent that they are not inconsistent with the other features of a given embodiment.

[0007] Some embodiments of the present fluid delivery devices include, broadly, a body, a cannula, a needle guide, and a septum. The body may be made from one or more pieces, such as two pieces. The body may include one or more fluid delivery passageways. One or more of the fluid delivery passageways may be oriented at a non-parallel angle to the normal direction of installation of the device. In some embodiments that include two or more fluid delivery passageways, one the of the passageways may extend into and be angled with respect to another. In some multi-fluid delivery passageway embodiments, the devices also may include a passageway closing structure that at least partially blocks one of the passageways in a first position and another of the passageways in a second position. The passageway or passageways that are not blocked in a given position may remain at least partially unobstructed and, more preferably, substantially unobstructed. In some embodiments, the passageway closing structure may be actuated or shifted between positions by an injection device, such as an injection needle. In some multi-fluid delivery passageway embodiments, some or all of the fluid delivery passageways may be defined in part by a fitting adapted to be releasably coupled to an infusion pump connector fitting. Thus, in such embodiments, the device may allow for fluid delivery from a pump and fluid delivery from another structure, such as a syringe.

[0008] The cannula and the body of the devices may be integrally formed, such that the cannula comprises a tube-like structure that extends outwardly from the body (e.g., from the bottom surface of the body). The devices also may include an insertion device that is coupled to the body and that may be used to aid in insertion of the device, and a needle guard that is coupled to the body and that may be used to protect users from inadvertent needle sticks. In some embodiments of the present fluid delivery devices, a rigid cannula may be used instead of a needle guide and a soft cannula.

[0009] Some embodiments of the present systems (which may be characterized as fluid delivery systems) include one or more of the present fluid delivery devices that have been sterilized and enclosed in a package, with or without instructions for use contained within the package.

[0010] Some embodiments of the present methods (which may be characterized as fluid delivery methods) include installing one of the present fluid delivery devices to a user, and delivering fluid through the device and into the user.

BRIEF DESCRIPTION OF THE DRAWINGS

[0011] The following drawings illustrate by way of example and not limitation. Identical reference numbers do not necessarily indicate an identical structure. Rather, the same reference number may be used to indicate a similar feature or a feature with similar functionality, as may non-identical reference numbers. Every feature of each embodiment is not always labeled in every figure in which that embodiment appears, in order to keep the figures clear. The figures are drawn to scale, meaning the sizes of the depicted elements are accurate relative to each other for at least one set of embodiments of the present fluid delivery devices.

[0012] FIG. **1** is a perspective view of one embodiment of the present fluid delivery devices.

[0013] FIGS. **2**A and **2**B are exploded views of the fluid delivery device show in FIG. **1**. The views are taken from different perspectives.

[0014] FIG. **3** is a cross-sectional view of the fluid delivery device shown in FIG. **1**, taken along a plane that intersects the middle of both rotation-restricting recesses of the base element of the body.

[0015] FIG. **4** is a cross-sectional view of the fluid delivery device shown in FIG. **1**, taken along a plane that intersects the middle of both rotation-restricting recesses of the base element of the body, showing the device installed to a user. Most of the background lines shown in FIG. **3** have been eliminated from this figure (and from the remaining figures) in an effort to make the figure easier to review.

[0016] FIG. 5A is a cross-sectional view of the fluid delivery device shown in FIG. 1, taken along a plane that is perpendicular to the plane along which the FIG. 3 and FIG. 4 cross sections were taken, showing the device installed to a user and the insertion device removed.

[0017] FIG. 5B is an enlarged detail view of a portion of the FIG. 5A view, showing aspects of one of the present septa.

[0018] FIG. 5C is a cross-sectional view of an embodiment of the FIG. 1 fluid delivery device that includes a septum having a retention flange.

[0019] FIG. 5D is a cross-sectional view of another embodiment of the FIG. 1 fluid delivery device that includes a septum having a retention flange and a retention collar extending perpendicularly from the retention flange.

[0020] FIG. 5E is an enlarged detail view of a portion of the FIG. 5A view, showing aspects of one of the present fluid delivery devices.

[0021] FIG. 5F is an enlarged detail view showing aspects of another embodiment of the present fluid delivery devices, and more specifically another of the present septa.

[0022] FIG. 5G shows the boundary illustrated in FIG. 5E in perspective.

[0023] FIGS. 5H-5J show enlarged detail views of cross sections of a portion of different embodiments of the present fluid delivery devices.

[0024] FIG. 6 is a cross-sectional view of the fluid delivery device shown in FIG. 1, taken along the same plane as FIG. 5A, showing an injection needle inserted into the device.

[0025] FIGS. 7A and 7B are perspective views of the FIG. 1 fluid delivery device, showing the result of trying to decouple the insertion device and needle guard from the body using equal and opposite forces: the needle guard uncouples first.

[0026] FIG. 8 is a cross-sectional view of an embodiment of the present fluid delivery devices that includes a body cavity that is in fluid communication with the exterior of the device through at least one opening in a sidewall of the device.

[0027] FIG. 9 is a perspective exploded view of another embodiment of the present fluid delivery devices.

[0028] FIG. 10 is a cross-sectional view of the fluid delivery device shown in FIG. 9, taken along a plane that does not intersect either rotation-restricting recess of the base element of the body, showing the device installed to a user and the insertion device removed.

[0029] FIG. 11 is a perspective view showing the position of different perimeters of one of the present fluid delivery devices, the different perimeters being positioned in different planes that intersect the device.

[0030] FIG. 12 is a cross-sectional view of a fluid delivery device having a cannula integral with the body.

[0031] FIGS. 13A and 13B are exploded views of an embodiment of a fluid delivery device that is assembled from at least two body pieces, or elements, of substantially equal height. The views are taken from different perspectives.

[0032] FIG. 14 is a perspective view of the assembled version of the fluid delivery device shown in FIGS. 13A and 13B.

[0033] FIG. 15 is a cross-sectional view of the FIGS. 13A and 13B embodiment, taken along line 15-15 shown in FIG. 16.

[0034] FIGS. 16 and 17 are cross-sectional views, respectively, of the two different elements that comprise the body of the FIGS. 13A and 13B fluid delivery device, taken along the plane at which the front surfaces of each element meet.

[0035] FIG. 18 shows an embodiment of a fluid delivery device similar to the one depicted in FIGS. 13A and 13B, but having a rigid cannula with a sharp end.

[0036] FIG. 19 is an exploded perspective view of an embodiment of the present fluid delivery devices that includes a body made from a majority (volumetrically) of septum material.

[0037] FIG. 20 is an exploded view of the FIG. 19 fluid delivery device, shown from the bottom perspective looking toward the top.

[0038] FIG. 21 is a perspective view of the assembled version of the fluid delivery device shown in FIG. 19.

[0039] FIG. 22 is a cross-sectional view of the FIG. 19 fluid delivery device, taken along a plane that intersects two of the four cap element attachment protrusions of the base element of the depicted embodiment.

[0040] FIG. 23 is a cross-sectional view of a version of the FIG. 19 fluid delivery device that includes a septum extension that is positioned within the needle guide and cannula passageways.

[0041] FIG. 24 is a cross-sectional view of a version of the FIG. 19 fluid delivery device that includes a rigid cannula having a sharp end.

[0042] FIG. 25 is a perspective view of an embodiment of the present fluid delivery devices that includes a fluid delivery passageway having at least a portion that is oriented at an angle that is not parallel with the normal direction of insertion of the device.

[0043] FIG. 26 is a perspective view from the bottom of the FIG. 25 fluid delivery device.

[0044] FIG. 27 is a cross-sectional view of the FIG. 25 fluid delivery device, taken along a plane that intersects the non-recessed portion of the bottom surface of the body.

[0045] FIG. 28 is an enlarged detail of the FIG. 27 view.

[0046] FIGS. 29 and 30 show different perspective views of a multi-inlet embodiment of one of the present fluid delivery devices that includes a passageway closing structure.

[0047] FIG. 31 is a cross-sectional view of the FIGS. 29 and 30 fluid delivery device, taken in a plane that intersects the middles of both inlets, and shows the passageway closing structure in its biased position.

[0048] FIG. 32 is another cross-sectional view of the FIGS. 29 and 30 fluid delivery device, showing the passageway closing structure in another position.

[0049] FIG. **33** is an enlarged view of a detail from FIG. **32**.

[0050] FIG. **34** is an enlarged view of a detail from FIG. **31**, in which the passageway closing structure has returned to its normally-biased position after an injection needle has been removed.

[0051] FIGS. **35** and **36** are enlarged detail views similar to FIGS. **33** and **34**, and depict another embodiment of the present passageway closing structures.

[0052] FIG. **37** is a perspective view of another multi-inlet embodiment of one of the present fluid devices that includes a passageway closing structure, showing the passageway closing structure in one position.

[0053] FIG. **38** is a perspective view of the FIG. **37** fluid delivery device, showing the passageway closing structure in another position.

[0054] FIG. **39** is a perspective view of the passageway closing structure of the FIG. **37** fluid delivery device.

[0055] FIG. **40** is another perspective view of the FIG. **37** fluid delivery device, showing the passageway closing structure blocking flow into and through the centrally-oriented fluid delivery passageway.

[0056] FIG. **41** is a perspective cross-sectional view (minus the cross-hatching), taken along line **41-41** in FIG. **40**, showing how the opening in the passageway closing structure of the FIG. **37** fluid delivery device aligns with the laterally-oriented fluid delivery passageway.

[0057] FIG. **42** is another perspective view of the FIG. **37** fluid delivery device, showing the passageway closing structure allowing flow into and through the centrally-oriented fluid delivery passageway.

[0058] FIG. **43** is a perspective cross-sectional view (minus the cross-hatching), taken along line **43-43** in FIG. **42**, showing how a portion of the passageway closing structure of the FIG. **37** fluid delivery device blocks flow through the laterally-oriented fluid delivery passageway and out of the body of the device.

DESCRIPTION OF ILLUSTRATIVE EMBODIMENTS

[0059] The terms "comprise" (and any form of comprise, such as "comprises" and "comprising"), "have" (and any form of have, such as "has" and "having"), "contain" (and any form of contain, such as "contains" and "containing"), and "include" (and any form of include, such as "includes" and "including") are open-ended linking verbs. As a result, a device, a system or a method that "comprises,""has, ""contains," or "includes" one or more recited elements or steps possesses those recited elements or steps, but is not limited to possessing only those elements or steps; it may possess elements or steps that are not recited. Likewise, an element of a device, system or method that "comprises, ""has,""contains," or "includes" one or more recited features possesses those features, but is not limited to possessing only those features; it may possess features that are not recited. Furthermore, a structure that is configured in a certain way must be configured in at least that way, but also may be configured in a way or ways that are not specified.

[0060] Thus, and by way of example, a fluid delivery device comprising a body having a first inlet, a first fluid delivery passageway extending from the first inlet, and a second fluid delivery passageway; a cannula having a portion that is coaxial with a portion of one of the first and second fluid delivery passageways; and a passageway closing structure oriented in a first position that substantially prevents fluid from flowing from the first inlet through the first fluid delivery passageway and out of the body, while allowing fluid to flow through the second fluid delivery passageway; the passageway closing structure being movable to a second position that substantially prevents fluid from flowing through the second fluid delivery passageway while allowing fluid to flow through the first fluid delivery passageway, is a fluid delivery device that possesses the recited body, cannula, and passageway closing structure, but is not limited to possessing only the recited elements (thus, other non-recited elements are not excluded). For example, the fluid delivery device also may include one or more septa.

[0061] Furthermore, the elements recited are not limited to possessing only the recited features. For example, the passageway closing structure may pivot about an axis that is centered within a portion of one of the fluid delivery passageways. As another example, an axis that is centered within or parallel to a portion of a passageway is one that is centered within or parallel to at least the portion, and may be centered within or parallel to the entire passageway. Similarly, a structure (e.g., a needle guide) "having" a portion positioned within a fluid delivery passageway has at least the portion positioned in the passageway, and may be positioned entirely within the passageway.

[0062] In any of the claims, the term "consisting of" or "consisting essentially of" may be substituted for any of the open-ended linking verbs recited above, in order to change the scope of a given claim from what it would otherwise be using the open-ended linking verb.

[0063] The terms "a" and "an" are defined as one or more than one unless this disclosure explicitly requires otherwise. The terms "substantially" is defined as at least close to (and includes) a given value or state (preferably within 10% of, more preferably within 1% of, and most preferably within 0.1% of).

[0064] The present fluid delivery devices may be used to deliver fluid to a living being for any of a variety of reasons. For example, some embodiments of the present fluid delivery devices may be used to deliver insulin to the subcutaneous tissue of a person with diabetes. However, embodiments of the present fluid delivery devices also may be used to deliver other fluids, such as saline, medication other than insulin, chemicals, enzymes, antigens, hormones, vitamins or the like, into subcutaneous tissue or other types of tissue, such as the epidermis, dermis, and different types of subdermal tissue such as muscle. The embodiments of the present fluid delivery devices shown in the figures are adapted for use with humans; however, those of ordinary skill in the art will, in light of this disclosure, understand that other embodiments may be adapted for use with animals.

[0065] The present fluid delivery devices may be characterized as ports, fluid delivery ports, injection ports, injection aides, infusion ports or infusion devices. The present fluid delivery systems may be characterized as injection systems or infusion systems.

[0066] FIG. **1** is a perspective view of one embodiment of the present fluid delivery devices. Fluid delivery device **100** includes a multi-piece body **20**, an insertion device **70** that is coupled to body **20** at a first location, and a needle guard **80** that is coupled to body **20** at a second location. Device **100** also includes a generically-depicted adhesive layer **30** (which may include a protective backing sheet). Adhesive layer **30** may include a pad having two opposing, adhesive-coated sides, one of which is attached to the relevant portion of the bottom surface of body **20** and the other of which will be attached to a user's body (e.g., once a backing sheet has been removed). Alternatively, one of the two opposing sides may be welded (e.g., ultrasonically welded) to the bottom surface of body **20** instead of being attached via an adhesive. As opposed to using an adhesive layer, a portion (e.g., all) of the bottom surface of body **20** may be configured to adhere directly to a living being's skin, such as by making the bottom surface material from a material that chemically reacts with and adheres to skin. Adhesive layer **30** is one example of an adhesive portion (of a fluid delivery device) that is configured to adhere directly to a living being's skin. The cannula of device **100** (see cannula **60** in FIG. **3**) is example of a cannula having a portion extending from the adhesive portion.

[0067] FIGS. **2**A and **2**B are exploded perspective views of the components of one embodiment of fluid delivery device **100**. As these figure show, body **20** may include a first element **22** (which may be characterized as a base element) and a second element **24** (which may be characterized as a top element or a cap element). Device **100** also may include a septum **40**, a needle guide **50**, and a cannula **60**. Septum **40** is one type of sealing mechanism.

[0068] Insertion device **70** comprising an insertion needle **72** connected to an insertion device hub **74**. As shown in FIG. **3**, a portion **73** of insertion needle **72** is located above the bottom surface of body **20** and is exposed when insertion device **70** is fully inserted in body **20**. One manner in which this exposure is accomplished is by providing insertion device hub **74** with an insertion needle access region **76** that allows access to portion **73** when insertion device **70** is fully inserted in body **20**. In other embodiments, insertion needle **72** could be configured such that portion **73** extends outwardly to a side of hub **74**, such that no access region is needed. Still other embodiments that allow access to a portion of insertion needle **73** are possible. In the embodiment shown in the figures, the insertion needle access region comprises an opening that extends from one side of the hub to the other. In other embodiments involving an access region, the access region comprises a recess that extends from one side of the hub to (but not beyond) a portion of the insertion needle. The access region may be located anywhere along the hub, and need not be closer to the top of hub **74** than the bottom of hub **74** (as is the depicted access region).

[0069] Body **20** and insertion device **70** may be configured such that insertion device **70** cannot rotate with respect to body **20** when fully inserted in body **20**. One manner of achieving this configuration comprises providing hub **74** with rotation-restricting protrusions **71**, which extend in a downstream or downward direction from the main portion of insertion device hub **74**, and by providing cap element **24** of body **20** with rotation-restricting recesses **77**. When insertion device **70** is fully inserted in body **20**, as shown in FIG. **3**, at least a portion of each protrusion **71** extends into each recess **77** such that the recess side walls interfere with the protrusions to prevent rotation of the insertion device relative to body **20**. Although the embodiment shown includes two protrusions and two recesses, other embodiments may include fewer or greater numbers of each.

[0070] Body **20** includes a fluid delivery passageway **25**, which extends from entrance opening **21** (which also may be characterized as inlet port **21**, or inlet **21**) in cap element **24** through exit opening **23** in base element **22**. Cap element **24** includes a portion **26** that tapers inwardly, or in a downstream direction, and extends from entrance opening **21** to a straight-walled portion **27** ("straight" meaning that, in this embodiment, the portion has no bend and a constant diameter), which extends to the bottom surface of cap element **24** and terminates at cap element exit opening **28**. The portion of cap element **24** that overlaps an outer portion of septum **40** may be characterized as a sealing mechanism-retaining shoulder, or a septum retaining shoulder. Base element **22** includes a base element entrance opening **31** from which a straight-walled portion **32** extends. Straight-walled portion **32** ends at tapered wall portion **33**, which extends into another straight-walled portion **34**. Straight-walled portion **34** extends into a tapered portion **35** that ends at exit opening **23**. Fluid delivery passageway **25** is characterized by all of these portions and openings.

[0071] FIG. **3** shows that cap element **24** is permanently attached to base element **22** at a location **29** that is closer to the outer perimeter **37** of body **20** than to the center of the body (which is not numbered, but which runs through the center of insertion needle **72**). Location **29** is where the portions of cap element attachment protrusion **43** and base element attachment recess **41** are joined together as a result of the permanent attachment. If ultrasonic welding is used, which is one suitable technique, the bottom of the protrusion **43** and the lowest part of the recess **41** comprise location **29**. The energy director that is shown in FIG. **3** proximate location **29** is eliminated by the ultrasonic welding. Two elements, or pieces, that are "permanently attached" to each other are attached such that a user of the device will not be able to separate them without destroying or significantly impairing the usefulness of the device. An alternative way to achieve this type of permanent attachment is through the use of an adhesive or adhesives. Other welding techniques that may be used include but are not limited to laser welding, hot plate welding, vibration welding, and friction welding.

[0072] In this embodiment, location **29** lies in a plane (not shown) that is substantially perpendicular to an axis (not shown) that is parallel to a portion of fluid delivery passageway **25**. (The axis also is parallel to a portion of the cannula passageway of cannula **60**.) The plane also may be characterized as being, in this embodiment, parallel to the bottom surface of body **20**. The plane may be referred to as a device plane, and it is a plane in which the two body elements—cap element **24** and base element **22**—may be assembled.

[0073] FIG. **3** shows that body **20**, and more specifically cap element **24**, may include a fluid delivery passageway identification feature **45** that is positioned near entrance opening **21** of body **20**. Such an identification feature may help a user to locate the inlet port of the body more quickly, especially if the identification feature stands out in some

way from the remainder of the body, such as by its color, by being a protrusion (as in the embodiment of the identification feature in the figures), or by being recessed. The identification feature can encircle entrance opening **21**, as shown, or it may not. As FIG. **3** shows, insertion device hub **74** may be provided with a complimentary identification feature configuration (e.g., a recess, as shown, but not labeled) that compliments or otherwise fits with identification feature **45**.

[**0074**] FIG. **3** shows one way that body **20** and needle guard **80** may be coupled to each other. Base element **22** may include a needle guard holding recess **47** that is configured to accept a top portion of needle guard **80** such that needle guard **80** may be held to body through a friction fit, or any other suitable means of engagement.

[**0075**] Cannula **60** of fluid delivery device **100** has a portion (specifically, an upper portion in the depicted embodiment) positioned within fluid delivery passageway **25**. Cannula **60** has a portion that is substantially coaxial with a portion of fluid delivery passageway **25**. More specifically, in the depicted embodiment, cannula **60** is coaxial with fluid delivery passageway **25**. Needle guide **50** has a portion (specifically, all in the depicted embodiment) positioned within fluid delivery passageway **25** and also within cannula **60** (or the cannula passageway of cannula **60**). Needle guide **50** has a portion that is substantially coaxial with a portion of fluid delivery passageway **25**. More specifically, in the depicted embodiment, needle guide **50** is coaxial with fluid delivery passageway **25**. Needle guide **50** also has a portion that is substantially coaxial with a portion of cannula **60**. More specifically, in the depicted embodiment, needle guide **50** is coaxial with cannula **60** (or the cannula passageway).

[**0076**] FIG. **4** shows a cross-sectional view of fluid delivery device **100** installed to a living being. The "installation" of one of the present fluid delivery devices to a living being or a user refers to the process by which a portion of the cannula is inserted below the outer surface of the skin. The device, and more specifically the bottom surface (unnumbered) of adhesive layer **30**, comprises an engagement surface that engages, or is in contact with, the skin of a living being when the device is installed to a living being. This figure shows that at least a portion (and, in this embodiment, all) of fluid delivery passageway **25** (as characterized by an axis (not shown) running through it from inlet port **21** to exit opening **23**) is substantially perpendicular to the engagement surface of the device.

[**0077**] This figure, like FIG. **3**, also shows that the end of insertion needle **72** extends slightly below the end of cannula **60** because the insertion needle is responsible for piercing the user's body tissue, which includes epidermis **92**, dermis **94** and subcutaneous tissue **96**. The portion of cannula **60** that is downstream of the end of needle guide **50** fits snugly around insertion needle **72** for the purpose of reducing the likelihood that the cannula will buckle, crimp or bend as the fluid delivery device is installed to a user. The friction between the lower portion of the cannula passageway and the outer surface of insertion needle **72** contributes to the reduction in that likelihood. That friction may be increased by grit blasting the insertion needle using any suitable material. Although not shown, the lowermost end of cannula **60** may terminate coincident with insertion needle **72** and be configured with the same angle of taper as insertion needle **72** to further the reduction in that likelihood. As FIG. **4** shows, cannula **60** is positioned such that any portion of it that is above the user's skin when fluid delivery device **100** is used (or is inserted into the living being) is positioned within outer perimeter **37** of body **20**. If the bottom of central portion **49** stopped above epidermis **92** instead of resting against epidermis **92**, cannula **60** would be positioned such that any exposed portion of it that is above the user's skin when fluid delivery device **100** is used (or is inserted into the living being) would be positioned within outer perimeter **37** of body **20**. Stated another way, body **20** is configured and cannula **60** is positioned such that any portion (e.g., any exposed portion) of cannula **60** that is above the user's skin when fluid delivery device **100** is used (or is inserted into the living being) is positioned within outer perimeter **37** of body **20**.

[**0078**] FIG. **5**A shows an embodiment of fluid delivery device **100** installed to a living being. Insertion device **70** has been removed. FIG. **5**A also shows that fluid delivery device **100** is configured such that fluid exiting fluid delivery device **100** and into a living body must exit fluid delivery device **100** through cannula **60**. Although there is a small gap visible in this and other figures between cap element **24** and base element **22** near septum **40**, the small gap is effectively eliminated when the cap element **24** is permanently attached to base element **22** and septum **40** is compressed.

[**0079**] FIG. **5**A shows that in some embodiments of the present fluid delivery devices, the bottommost portion of the septum located within the fluid delivery passageway (bottom surface **44** of septum **40**, in the depicted embodiment) is closer to the inlet port than to the bottom surface of the body. More specifically, FIG. **5**A shows an embodiment of the present fluid delivery devices in which the bottommost portion of the septum located within the fluid delivery passageway is closer to the plane (not shown) in which the inlet port is positioned than to the bottommost portion (or the plane (not shown) in which the bottommost portion is positioned) of the body, which bottommost portion comprises the bottom of central portion **49** of base element **22** in the depicted embodiment.

[**0080**] FIG. **5**A also shows that in some embodiments of the present fluid delivery devices, the bottommost portion of the septum located within the fluid delivery passageway is closer to the inlet port than the exit port (exit opening **23**, in this embodiment) of the body. More specifically, FIG. **5**A shows an embodiment of the present fluid delivery devices in which the bottommost portion of the septum located within the fluid delivery passageway is closer to the plane (not shown) in which the inlet port is positioned than to the plane (not shown) in which the exit port of the body is positioned. A space (e.g., open space) or a structure (e.g., a portion of a structure such as a septum or a needle guide) can be within a fluid delivery passageway even though there is a structure or structures (e.g., a needle guide and/or a cannula) in between the space/structure and the material defining the fluid delivery passageway.

[**0081**] As shown in FIGS. **3**-**5**A, body **20** includes a cavity within cap element **24** and base element **22** comprising open space **19**. Body **20** is sealed against fluid entering this open space by virtue of the permanent attachment between the

two elements at location **29** and the compression seal that each element creates with septum **40**. Open space **19** may be characterized as non-fluid delivery passageway open space within body **20**.

[**0082**] FIG. **5**B is a detail view of a portion of fluid delivery device **100** around septum **40**, and illustrates some of the features of the depicted embodiment of fluid delivery device **100**. The depicted embodiment of septum **40** includes an accessible surface portion **42** (or, an "accessible portion") that is positioned downstream (or below, in this embodiment) of inlet port **21** and that is accessible to an injection structure such as an injection needle during normal use of the fluid delivery device ("normal use" does not include accessing the septum with an injection needle by somehow inserting the injection needle through the septum retaining shoulder of cap element **24**). In this embodiment, accessible surface portion **42** is a portion of the top surface of the septum. The outer surface of septum **40** includes the top surface (of which accessible surface portion **42** is a part), a side wall **46** extending downstream from the top surface, a portion **48** that is tapered inwardly (or in a downstream direction), and a bottom surface **44** that, in this embodiment, is substantially parallel with the top surface. In this embodiment, the side wall is straight and parallel to an axis (not shown in this figure, but see axis **103** in FIG. **5**E) that is centered within a portion (and, in the embodiment, all) of fluid delivery passageway **25**. The majority of side wall **46** is in contact with (and may be radially compressed by) a surrounding portion or portions of the fluid delivery device. More specifically, the majority of side wall **46** is in contact with a surrounding portion of the body. In the depicted embodiment, portion **48** has an upstream section that is tapered at a constant angle and a downstream section with a concave taper that matches the corresponding convex taper of a portion of needle guide **50**. The downstream section of portion **48** also may be characterized as having a taper of non-constant angle because, in the downstream direction, the material defining that section is curved (not flat). Similarly, the corresponding portion of needle guide **50** also may be characterized as tapering at a non-constant angle, the tapering being inwardly or in a downstream direction.

[**0083**] Accessible surface portion **42** has a perimeter, which is defined by cap element exit opening **28**. The perimeter has a greatest width W_{42}, which comprises the greatest distance between any two points along the perimeter that are connected by a straight line. In this embodiment, the perimeter is circular in shape, and greatest width W_{42} comprises the diameter of the circle. Other embodiments of the present fluid delivery devices may have cap element exit openings, and therefore accessible portions of the septa, that have different shapes. Bottom surface **44** of septum **40** has a perimeter that, in the depicted embodiment, is circular. The perimeter has a greatest width W_{44}, which comprises the greatest distance between any two points along the perimeter that are connected by a straight line. In this embodiment, greatest width W_{44} comprises the diameter of the circle defined by bottom surface **44**, although in other embodiments the bottom surface may be shaped differently. Bottom surface **44** may be more broadly characterized as a portion of the exterior surface of septum **40** (a "surface portion") that is adjacent to open space **15** that is downstream of the surface portion and within fluid delivery passageway **25**.

[**0084**] As FIG. **5**B shows, the perimeter of bottom surface **44** is smaller than the perimeter of accessible surface portion **42**. This means that the linear distance represented by the perimeter of bottom surface **44** (which, for this embodiment, is a circumference) is smaller than the linear distance represented by the perimeter of accessible surface portion **42** (which also is a circumference, in this embodiment). Greatest width W_{44} also is less that greatest width W_{42}. This relationship between the size of the perimeters of the two surface portions (accessible surface portion **42** and bottom surface **44**) may be true of the septa used with other embodiments, such as any of the septa used with the multi-inlet embodiments described below.

[**0085**] Cannula **60** has a smallest internal width W_c (see FIG. **5**A), which is the width of the smallest portion of the material forming the cannula passageway. In this embodiment, greatest width W_{42} is at least twice as great as the smallest internal width W_c of cannula **60**.

[**0086**] FIG. **5**B also shows that septum **40** has a height S_H, which runs in a direction parallel to the axis described above, and a middle S_M that is one-half of the height. The middle, in this embodiment, is in contact with a surrounding portion of fluid delivery device **100**. The surrounding portion may be body material (as shown), or it may be needle guide material or cannula material in other embodiments. The middle also may be radially compressed by the material surrounding it.

[**0087**] Septum shapes other than the one shown, for example, in FIGS. **1**-**5**B may be used for septum **40**. For example, FIG. **5**C shows another embodiment of fluid delivery device **100** that includes a septum **140**, which has a lower portion that is similar in shape to the lower portion of septum **40**, but that includes a septum retention flange **139** extending from the septum's central portion **137**. Septum **140** has a shape in this embodiment that is symmetrical about the axis (not shown) that is centered within fluid delivery passageway **25**. The surface area of septum **140** that is in contact with cap element **24'** is greater than the surface area of the septum's exposed portion (see FIGS. **5**E and **5**F for a description of a septum's "exposed" portion). Septum retention flange **139** is oriented parallel to the engagement surface of the device and is perpendicular to the intended direction of insertion of the device. The flange is configured to help prevent upstream and downstream movement of septum **140** that might otherwise occur as a needle (e.g., an insertion or injection needle) is inserted through or withdrawn from the septum. FIG. **5**D shows another septum embodiment—septum **140'**—that includes a septum retention collar **135** protruding in a downstream direction from the septum retention flange **139**. Collar **135** may help prevent lateral septum movement (or movement that includes a directional component that is perpendicular to the intended direction of insertion of the device) that might otherwise occur during needle insertion or withdrawal.

[**0088**] Furthermore, some or all of a given septum (e.g., the portion of septum **40** that includes accessible surface portion **42**) may be artificially-colored (e.g., by adding a coloring agent to the material that forms the septum). This may enhance the contrast between the septum and the remainder of the fluid delivery device.

[**0089**] FIG. **5**E, which depicts the same detail shown in FIG. **5**B, highlights certain aspects of the embodiment of

fluid delivery device **100** shown in FIG. **1**. FIG. **5**E shows that the body has a boundary **101** (also described as a "first inlet boundary" and an "inlet boundary") extending upstream and downstream of inlet port **21** (or inlet **21**) parallel to an axis **103** centered within a portion (and, in the depicted embodiment, all) of fluid delivery passageway **25**. FIG. **5**E also shows that the outer surface of septum **40** includes an exposed portion located within boundary **101** and a remaining non-exposed portion. The exposed portion is encircled by the dashed line labeled **105**. The remaining non-exposed portion, which comprises all of the outer surface of septum **40** other than exposed portion **105**, is encircled by the dashed line labeled **107**. Although an injection needle is not shown in this figure, one can see that an injection needle that enters exposed portion **105** in a downstream direction and exits septum **40** through part of remaining non-exposed portion **107** that is substantially perpendicular to axis **103** (the part can be any part of bottom surface **44** in this embodiment) will exit septum **40** into a portion of open space **15** that will be within fluid delivery passageway **25** and downstream of the part through which the injection needle exited. Thus, the embodiment of the present fluid delivery devices shown in FIGS. **1**-**5**B and **5**E is an example of one that is configured such that an injection needle that enters the exposed portion of the septum (which is within the boundary) in a downstream direction and exits the septum (a) through part of the remaining non-exposed portion that is substantially perpendicular to an axis that is centered within a portion of the fluid delivery passageway or (b) through part of the remaining non-exposed portion that has a tangent that is not parallel to the axis, exits the first sealing mechanism into open space that is (c) within the first fluid delivery passageway and (d) downstream of the part through which the injection needle exited.

[**0090**] FIG. **5**F depicts another embodiment of the present fluid delivery devices that has this configuration. FIG. **5**F shows another configuration of exposed portion **105** of one of the present septa: septum **40**'.

[**0091**] FIG. **5**G shows how boundary **101** looks in perspective.

[**0092**] Each of FIGS. **5**H-**5**J depicts an embodiment of the present fluid delivery devices that is configured such that an injection needle that enters the exposed portion of the septum (which is within the boundary) in a downstream direction and exits the septum (a) through part of the remaining non-exposed portion that is substantially perpendicular to an axis that is centered within a portion of the fluid delivery passageway or (b) through part of the remaining non-exposed portion that has a tangent that is not parallel to the axis, exits the septum into open space that is (c) within the fluid delivery passageway and (d) downstream of the part through which the injection needle exited. Each of FIGS. **5**H-**5**J also depicts an embodiment of the present fluid delivery devices that is configured such that an injection needle that enters the exposed portion of the septum (which is within the boundary) in a downstream direction and exits the septum through part of the remaining non-exposed portion that is not parallel to the axis either (a) exits the septum into open space that is (i) within the fluid delivery passageway and (ii) downstream of the part, or (b) contacts a portion of the fluid delivery device that is tapered inwardly.

[**0093**] In FIG. **5**H, for example, injection needles IN**1** and IN**2**, shown in phantom, have each entered exposed portion **105** of septum **40** in a downstream direction and have exited the septum through part (IN**1**P and IN**2**P, respectively) of remaining non-exposed portion **107** that is not parallel to axis **103** and contacted a portion of the fluid delivery device (in this embodiment, a portion of needle guide **5**B**0**) that is tapered inwardly. Injection needle IN**3**, shown in phantom, has entered exposed portion **105** of septum **40** in a downstream direction and has exited the septum through part (IN**3**P) of remaining non-exposed portion **107** that is not parallel to axis **103**, the exiting being into open space (a central portion of open space **15**) that is within fluid delivery passageway **25** and downstream of part IN**3**P. Furthermore, as FIG. **5**H shows, injection needle IN**3** has entered exposed portion **105** of septum **40** in a downstream direction and exited septum **40** through part (IN**3**P) of remaining non-exposed portion **107** that is substantially perpendicular to axis **103**, the exiting being into open space that is within fluid delivery passageway **25** and downstream of part IN**3**P.

[**0094**] In FIG. **5**I, injection needles IN**1** and IN**2** have each entered the exposed portion (not labeled) of septum **40**" in a downstream direction and have exited the septum through part (IN**1**P and IN**2**P, respectively) of the remaining non-exposed portion (not labeled) that is not parallel to axis **103** and contacted a portion of the fluid delivery device that is tapered inwardly. Injection needle IN**3**, shown in phantom, has entered the exposed portion of septum **40**" in a downstream direction and has exited the septum through part (IN**3**P) of the remaining non-exposed portion that is not parallel to axis **103**, the exiting being into open space (a central portion of open space **15**) that is within fluid delivery passageway **25** and downstream of part IN**3**P. Furthermore, as FIG. **5**I shows, injection needle IN**3** has entered the exposed portion of septum **40**" in a downstream direction and exited septum **40**" through part (IN**3**P) of the remaining non-exposed portion that has a tangent **109** that is not parallel to axis **103**, the exiting being into open space that is within fluid delivery passageway **25** and downstream of part IN**3**P.

[**0095**] In FIG. **5**J, injection needles IN**1** and IN**2** have each entered exposed portion **105** of septum **40**'" in a downstream direction and have exited the septum through part (IN**1**P and IN**2**P, respectively) of remaining non-exposed portion **107** that is not parallel to axis **103** and contacted a portion of the fluid delivery device (in this embodiment, portion **33**) that is tapered inwardly. Injection needle IN**3**, shown in phantom, has entered exposed portion **105** of septum **40**'" in a downstream direction and has exited the septum through part (IN**3**P) of remaining non-exposed portion **107** that is not parallel to axis **103**, the exiting being into open space (a central portion of open space **15**) that is within fluid delivery passageway **25** and downstream of part IN**3**P. Furthermore, as FIG. **5**J shows, injection needle IN**3** has entered exposed portion **105** of septum **40**'" in a downstream direction and exited septum **40**'" through part (IN**3**P) of remaining non-exposed portion **107** that has a tangent **109** that is not parallel to axis **103**, the exiting being into open space that is within fluid delivery passageway **25** and downstream of part IN**3**P.

[**0096**] The septa shown in each of FIGS. **3**-**5**B and **5**E-**5**J include a portion that is positioned within fluid delivery passageway **25**. In the depicted embodiments, the portion comprises all of the respective septa. Each of the septa depicted in these figures also includes a portion positioned

within needle guide **50** (or, more specifically, the needle guide passageway (unnumbered) of needle guide **50**). In the depicted embodiments, this portion comprises a lower portion of the depicted septum, specifically portion **48** (see FIG. **5**B). Some of portion **48** is also positioned within cannula **60**, or, more specifically, the cannula passageway (unnumbered) of cannula **60**.

[**0097**] FIG. **6** depicts an injection device **90** fully inserted into fluid delivery device **100**. The injection device may be used to inject fluid (e.g., insulin) into the subcutaneous tissue of a user. The depicted embodiment of injection device **90** comprises a standard syringe that includes a generically-depicted plunger portion **91** and an injection structure **93** that comprises, in this embodiment, a standard syringe needle. Other injection devices may be used with embodiments of the present fluid delivery devices to deliver fluid to a user. Fluid delivery device **100** includes a needle control portion that is configured to prevent a needle (e.g., injection needle **93**) sized to inject fluid through the fluid delivery device and into a living being from piercing cannula **60** during normal fluid injection. In this embodiment, normal fluid injection involving an injection needle involves inserting the injection needle through the accessible surface portion **42** of septum **40**. In this embodiment, the needle control portion comprises needle guide **50**, which protects the inner wall of cannula **60** (which defines the cannula passageway) from being contacted by the injection needle, and which includes a shaft portion having a sufficiently small inner diameter such that any injection needle sized to deliver fluid to a living being through the device will not be able to tilt enough to pierce any portion of the cannula that is accessible to the injection needle downstream of the end of the needle guide. In this embodiment, injection needle **93** terminates above the lowermost end of needle guide **50**. Needle control portions other than a needle guide may be used in other embodiments. For example, although not shown in the figures, a portion of the opening in cap element **24**, such as straight-walled portion **27**, could be configured to define a portion of the fluid delivery passageway that is sufficiently small enough to perform the function of the shaft portion of needle guide **50**.

[**0098**] Generally, FIG. **6** shows that the depicted embodiment of fluid delivery device **100** is an example of a fluid delivery device that is configured such that a needle sized to inject fluid through the fluid delivery device (which may involve the fluid only being in contact with a lower portion of the device, such as the lower portion of cannula **60**) and into a living being cannot pierce the cannula during normal fluid injection. Furthermore, as FIG. **6** shows, the depicted embodiment of fluid delivery device **100** is one that is configured such that, when properly installed to a living being, a needle inserted through the septum to deliver fluid to the living being (e.g., injection needle **93**) will not puncture the living being's skin. These configurations are achieved in this embodiment through choosing the height H of fluid delivery device **100** to be greater than the length of injection needle **93** and by configuring needle guide **50** to overlap all portions of cannula **60** that would otherwise be exposed to an injection needle inserted properly through septum **60**.

[**0099**] FIGS. **7**A and **7**B illustrate that the depicted embodiment of fluid delivery device **100** is configured such that pulling insertion device **70** and needle guard **80** in opposite directions (as indicated by the two arrows in FIG. **7**A) with equal force to uncouple them from body **20** causes needle guard **80** to uncouple from body **20** first. This configuration may be achieved in different ways. For example, in the depicted embodiment, the friction force between insertion device **70**, which is fully inserted in body **20**, and septum **40** is greater than the friction force between body **20** and needle guard **80**. Septum **40** may be a non-split septum, which adds to the friction force between it and insertion needle **72** of insertion device **70**. In other embodiments, septum **40** may be split, or otherwise configured to produce less friction force against the withdrawal of an insertion needle, and insertion device hub **74** and body **20** (more specifically, cap element **24**) may be configured to engage one another (e.g., through a friction fit or interlocking parts) in a way that (a) makes it necessary to use more force to uncouple insertion device **70** from body **20** than it takes to uncouple needle guard **80** from body **20**, or (b) makes it not possible to uncouple insertion device **70** from body **20** by pulling on insertion device **70** and needle guard **80** in equal and opposite directions without first manipulating insertion device **70** relative to body **20** (e.g., by twisting insertion device **70** to unlock it from body **20**).

[**0100**] FIG. **8** shows another embodiment of the present fluid delivery devices. Fluid delivery device **200** is similar to fluid delivery device **100**. However, body cavity **19** of body **20** of fluid delivery device **200** is open to the exterior of body **20** by virtue of a body cavity opening. More specifically, body **20** includes at least two body cavity openings **17** that are positioned in cap element **24** and that are in fluid communication with body cavity **19**. Body cavity **19** in both fluid delivery device **200** and fluid delivery device **100** will not contact fluid that is being delivered through the fluid delivery passageway of body **20** to a living being (meaning that the body cavity will not contact the fluid as it is delivered through the body to a living being). However, if the otherwise sealed condition of body **20** is breached (e.g., around septum **40** or location **29**), and fluid gets into body cavity **19**, that fluid can drain out of body cavity **19** through one or more of body cavity openings **17**.

[**0101**] When the fluid delivery device is made from two or more pieces or elements, there are many suitable configurations for those elements. FIGS. **1**-**8**, for example, show some examples of suitable configurations for cap element **24** and base element **22** of body **20**. Another suitable configuration of these elements is shown in FIG. **9**.

[**0102**] FIG. **9** is an exploded perspective view of fluid delivery device **300**, which includes a body **20** having cap element **24** (which may also be described as a septum cap) and base element **22** (which may also be described as a base), septum **40**, needle guide **50**, cannula **60** and adhesive layer **30**. An insertion device and a needle guard may be coupled to body **20** of fluid delivery device **300** in similar fashion to how they are coupled to fluid delivery device **100**. Base **22** of this embodiment includes rotation-restricting recesses **77**. Base **22** also includes cap recess **81** that comprises, in this embodiment, an annular groove that is parallel with fluid delivery passageway **25**. Cap **24** includes a top portion **83** and a base-engaging section **85** extending downstream from top portion **83**. At least a portion of base-engaging section **85** is complimentary in shape to a portion of cap recess **81**. Cap **24** may be coupled to base **22** in any suitable manner. In one embodiment, cap **24** may be

permanently attached to base **22** using ultrasonic welding or any other suitable permanent attachment technique, such as those described above.

[**0103**] FIG. **10** is a cross-sectional view of fluid delivery device **300** inserted in a living being, and shows that fluid delivery passageway **25** of this embodiment may comprise the same openings and portions as the embodiment of fluid delivery device **100** shown, for example, in FIGS. **3** and **4**. FIG. **10** also shows that cap **24** has an outer perimeter OP_{cap}, base **22** has an outer perimeter OP_{base}, and OP_{base} is greater than OP_{cap}. In this embodiment, the outer perimeter of base **22** is also the same as the outer perimeter **37** of body **20**.

[**0104**] FIG. **11** shows fluid delivery device **100'**, which is similar to fluid delivery device **100** except for lacking identification feature **45**. This figure illustrates that body **20** has a first perimeter **39** at top **12** and a second perimeter (which, in this embodiment, comprises outer perimeter **37**) that is close to the bottom surface of the body (which is the bottom surface of the base element). First perimeter **39** is positioned in a first plane P**1**, which is perpendicular to axis **9** that is centered within the fluid delivery passageway of the body (and that is, therefore, parallel to a portion of the fluid delivery passageway). Second perimeter **37** is positioned in a second plane P**2**, which is parallel to and downstream of first plane P**1**. As FIG. **11** shows, second perimeter **37** is greater than first perimeter **39**. This means that the linear distance represented by second perimeter **37** is larger than the linear distance represented by first perimeter **39**.

[**0105**] The cannulas shown in the figures described above are separate from the body of the depicted fluid delivery devices. In some other embodiments, the cannula may be integrally formed with the body. An example of such an embodiment is fluid delivery device **400**, shown in FIG. **12**. Fluid delivery device **400** includes cannula **160** that is integral with (or integrally formed with), and extends from, body **20**. In this embodiment, needle guide **50** is in direct contact with a portion of the body material forming fluid delivery passageway **25**.

[**0106**] Multi-piece or multi-element bodies other than those shown in FIGS. **1-12** are possible. For example, FIGS. **13A-17** show aspects of an embodiment that assembles in a plane that is substantially parallel to an axis of at least a portion of the fluid delivery passageway. In the depicted embodiment, the assembly plane is parallel to the axis of the fluid delivery passageway. These figures also show an example of a body that comprises multiple body elements of substantially equal height assembled in at least one device plane that is substantially parallel to an axis of a portion of the fluid delivery passageway. The phrase "an axis of a portion of [a/the] fluid delivery passageway" means an axis that is centered within and running parallel to the portion in question. Such an axis does not intersect the fluid delivery passageway wall portion that defines the portion in question.

[**0107**] Fluid delivery device **500** is similar in some respects to the previously-depicted embodiments. It includes a body **220**, a septum **40**, a needle guide **50** and a cannula **60**. Body **220**, however, comprises two elements **222** and **224** that assembly in a device plane that, in this embodiment, is parallel to fluid delivery passageway **225**. Body **220** also includes needle guard holding recess **247** that is configured to accept a top portion of a needle guard such that the needle guard may be held to body through a friction fit, or any other suitable means of engagement. Elements **222** and **224** have substantially the same height. More specifically, height H_{222} and H_{224} (see FIG. **13**A, not labeled in FIG. **13**B) are equal in this embodiment.

[**0108**] FIG. **14** shows fluid delivery device **500** in its assembled state. Elements **222** and **224** may be coupled to each other using any suitable attachment method, including any of those discussed above. For example, element **224** may include one or more male engagement members **243** that fit at least partially into female engagement recesses **241** of element **222**, and ultrasonic welding may be used to permanently attach the two elements together at the location where the male engagement members meet the female engagement recesses. The members and recesses meet in the device plane P_{500} shown in FIG. **15**, which is taken along line **15-15** shown in FIG. **16**.

[**0109**] The features of body **220** are similar in function to those of body **20**, and thus have been numbered as they are for body **20** except for a **200** added to the number. Thus, inlet port **221** is similar in shape and function and to inlet port **21**. Some of the features of body **220** are labeled in FIGS. **16** and **17**. Although an identification feature is not shown as part of this embodiment, it may be provided in other embodiments. Although body **220** does not include any body cavity openings in fluid communication with body cavity **219**, one or more body cavity openings similar to body cavity openings **17** from body **20** may be provided in other embodiments.

[**0110**] Some embodiments of the present fluid delivery devices may use a cannula having a sharp end, which may be a centerpoint end or a beveled end (as shown) and which in some embodiments may be characterized as having a "tipped" end. Such a cannula may be open at one end, as shown in FIG. **18**, or it may be closed at one end and have an opening somewhere along its shaft, upstream of the end. Such a cannula may be sufficiently rigid that its lower portion can be inserted into a living being without using an insertion needle, such as insertion needle **72** shown in FIG. **3**. FIG. **18** depicts an embodiment of fluid delivery device **500** that includes such a cannula **260** and a septum **240**. Septum **240** is shaped differently from septum **40** of fluid delivery device **100**. A cannula and septum like those shown in FIG. **18** may be substituted for the cannula, needle guide and septum combinations of any of the present fluid delivery devices, such as cannula **60**, needle guide **50** and septum **40** in the embodiment of fluid delivery device **100** depicted in FIGS. **1** and **2**. Cannula **260** is illustrated as having a tapered portion at the exit opening of the body. In other embodiments, no such tapered portion exists (the same is true of cannula **360** show in FIG. **24**, discussed below).

[**0111**] FIGS. **19-22** depict another of the present fluid delivery devices that has a multi-element body. Fluid delivery device **600** includes body **320**, needle guide **50**, cannula **60** and adhesive layer **30**. Body **320** includes a base element **322**, a cap element **324**, and an intermediate element **301**. Intermediate element **301** may be made from the same material (e.g., a self-sealing material such as an elastomeric material) as any of the present septa, and it may be sized relative to base element **322** and cap **324** such that a volumetric majority of body **320** is a self-sealing body material. The volumetric majority may be determined by any suitable test, including any suitable water displacement test.

As FIG. **22** shows, a portion of the material from which intermediate element **301** may be formed comprises, or forms, a septum for the fluid delivery passageway of the device.

[**0112**] Cap element **324** may define an upper portion of the fluid delivery passageway **325**. Specifically, cap element **324** includes entrance opening **321** (or inlet port **321**, or inlet **321**) of the device, a portion **326** that tapers inwardly, or in a downstream direction, and extends from entrance opening **321** to a straight-walled portion **327**, which extends to the bottom surface of cap element **24** and terminates at cap element exit opening **328**. Cap element **324** also includes cap element attachment protrusions **343** (four of them in this embodiment) that can be positioned in base element attachment recesses **341** of base element **322**. The locations **329** at which the protrusions and recesses meet after attachment (through, e.g., ultrasonic welding) defines a device plane that is substantially perpendicular to an axis centered within a portion of fluid delivery passageway **325**.

[**0113**] Intermediate element **301** includes multiple openings **303** sized to allow cap element attachment protrusions **343** to pass through them. As FIG. **22** shows, intermediate element **301** also includes an inner portion **302** and an outer portion **304**. Inner portion **302** has a thickness, or a height, that is suitable for a septum. A central section of inner portion **302** is positioned in fluid delivery passageway **325**, and acts as a septum for the passageway that substantially prevents fluid from flowing through the passageway (until an injection needle or the like is inserted through the septum).

[**0114**] Base element **322** may define a lower part of fluid delivery passageway **325**. Base element **322** includes a base element entrance opening **331** from which a tapered wall portion **333** extends. Tapered wall portion **333**, which may include an upper portion having a inward, or downstream, taper of constant angle and a lower portion that tapers, but not at a constant angle. Tapered wall portion **333** extends into straight-walled portion **334**, which extends into another tapered portion **335** that terminates at exit opening, or exit port, **323**. An inner portion **307** of base element **322** fits within the recess defined by the inner wall of outer portion **304** and the bottom of inner portion **302**. Inner portion **307** includes inner central portion **349** and needle guard holding recess **347**.

[**0115**] Needle guide **50** extends up to and contacts an outer surface (a portion of the bottom surface, in this embodiment) of inner portion **302** of intermediate element **301**. In this embodiment, the portion of the intermediate element **301** acting as the septum for the fluid delivery passageway does not include any material that is positioned within needle guide **50** or cannula **60**. However, in other embodiments, inner portion **302** may include a septum protrusion positioned to fit within a portion of the needle guide (and, more specifically, the needle guide passageway) and the cannula (and, more specifically, the cannula passageway). The embodiment of fluid delivery device **600** shown in FIG. **23** includes such a protrusion: septum extension **309**. FIG. **24** shows an example of a version of fluid delivery device **600** that includes a rigid cannula **360** having a sharp end.

[**0116**] Fluid delivery device **600** is another embodiment of a fluid delivery device having an outer perimeter (outer perimeter **337**) and a cannula positioned such that any portion of the cannula that is above a user's skin when the device is used is positioned within the outer perimeter of the device. In this embodiment, a portion (more specifically, a majority) of the outer surface of body **320** has a convex shape.

[**0117**] Multi-Inlet Fluid Delivery Devices

[**0118**] Some embodiments of the present fluid delivery devices comprise multiple inlets, a fluid delivery passageway extending from each inlet, and a septum for each passageway where the septa are not in contact with each other. One of the fluid delivery passageways may be oriented at a non-zero angle to another of the passageways. One fluid delivery passageway may extend into another. Some multi-inlet embodiments comprise only one outlet. FIGS. **25-28** illustrate an example of an embodiment fitting each of these characterizations.

[**0119**] Fluid delivery device **700** includes a body **620** and an adhesive layer **630** attached to the body. As with all of the present fluid delivery devices, device **700** may also include an insertion device (not shown) and a needle guard **680**. Body **620** includes rotation-restricting recesses **677**, which function like the rotation-restricting recesses described above. The insertion device hub of any insertion device used with body **620** may be provided with complimentary rotation-restricting protrusions that function like those described above. Body **620** also includes a needle guard holding recess **647**, which functions like the needle guard holding recess described above. In this embodiment, needle guard holding recess **647** is not a generally cylindrical recess—it extends around the base element of body **620** less than 360 degrees. Needle guard **680** has a notch **681** corresponding to the non-recessed portion of the base element, as shown in FIG. **26**.

[**0120**] Body **620** includes two inlet ports, **605** and **615**. Inlet port **605** (also inlet **605** or entrance opening **605**) is centered within the cap element of body **620**. Inlet port **605** also is perpendicular to the normal direction that fluid delivery device **700** will be installed to a living being (that direction being substantially parallel to cannula **660**, discussed below), and to an axis (not shown) centered within a portion of the fluid delivery passageway extending from it. Inlet **615** is not centered within the cap element of body **620**. Inlet **615** is oriented at an angle between zero and ninety degrees to the axis centered within the central fluid delivery passageway and to the normal direction of insertion of the device.

[**0121**] FIG. **26** shows that inlet **615** is bordered by an injection device shoulder **617** that is parallel to the plane in which inlet **615** lies. As FIG. **28** shows, injection device shoulder **617** may be configured such that a portion of an injection device, such as a portion of the plunger of a standard syringe, rests against it when an injection of fluid through inlet **615** takes place.

[**0122**] FIG. **27** shows fluid delivery device **700** in cross section and installed to a living being. As this figure shows, body **620** includes a cap element **624** and a base element **622**. Cap element **624** includes a cap element attachment protrusion **643**, which functions like the cap element protrusion described above. Base element **622** includes a base element attachment recess **641**, which functions like the

base element attachment recess described above. The cap and base elements of this embodiment may be permanently attached to each other using any of the techniques described above. The two elements may be assembled in a device plane that is perpendicular to the central fluid delivery passageway's axis and to the normal insertion direction of the device. The device plane is defined by the location **629** where the base and cap elements are attached to each other.

[**0123**] Body **620** includes fluid delivery passageway **635** extending to exit opening **623** from inlet **605**, and fluid delivery passageway **645** extending from inlet **615** into fluid delivery passageway **635** at a non-zero angle, such as an angle A (see FIG. **28**) that is greater than zero and less than or equal to 90 degrees. As FIGS. **27** and **28** show, a portion of inlet **615** is downstream of inlet **605**, and a portion of inlet **615** is upstream of inlet **605**. Device **700** also includes a needle guide **665**, which has a portion positioned within fluid delivery passageway **645**. Needle guide **665** is coaxial with fluid delivery passageway **645** in this embodiment. Device **700** also includes a septum **662** positioned within fluid delivery passageway **645**. Septum **662** has an accessible portion that is recessed downstream of inlet **615**, and has a portion positioned within needle guide **665**.

[**0124**] Fluid delivery device **700** includes another needle guide **655** that has a portion positioned within, and is coaxial with, fluid delivery passageway **635**. Device **700** also includes a cannula **660** having a portion (in this embodiment, an upper portion) positioned within fluid delivery passageway **635**. In this embodiment, fluid delivery passageway **635**, needle guide **655** and cannula **660** are coaxial with each other. Device **700** also includes another septum **652**, which is separate from septum **662**, having a portion positioned within fluid delivery passageway **635**, but no portion (in this embodiment) positioned within either needle guide **655** or cannula **660**. Septum **652** is wedged between a portion of cap element **624** and a portion of base element **622** and helps to seal body cavity **619**, as does septum **662**. Both cannula **660** and needle guide **655** have a side opening (unnumbered) that allows fluid to enter fluid delivery passageway **635** from passageway **645**. Body **620** is characterized by outer perimeter **637**.

[**0125**] FIG. **28** is an enlarged detail of a portion of the FIG. **27** view, and shows that fluid delivery device **700** is an embodiment of a device in which the length of the fluid delivery passageway of the body of the device is greater than the height of the device above the device's engagement surface. This figure shows that the engagement surface of the device, which is the bottom surface of adhesive layer **630**, lies in plane P_{ES}. When device **700** is used, the engagement surface may be curved to fit a user's skin, but in at least one orientation the engagement surface lies in plane P_{ES}. Fluid delivery passageway **645** is oriented at a non-perpendicular angle to (a) the engagement surface of device **700**, and (b) the bottom surface of body **620**, which is parallel to the engagement surface.

[**0126**] The topmost plane P_{TOP} in which the top of device **700** lies is parallel to plane P_{ES}. The body has a height H_{body} characterized by the distance between planes P_{TOP} and P_{ES} taken along a line extending perpendicularly between both planes. Fluid delivery passageway **635** has a length L_2 that comprises length L_1, which extends between inlet **605** and the location at which the axis centered within fluid delivery passageway **645** meets the axis centered within fluid delivery passageway **635**, and length L_4, which extends from the end of L_1 to exit opening **623** of body **620**. The longest fluid delivery passageway within body **620** comprises a combination of fluid delivery passageways **645** and **635**, and has a length of L_3 (which extends from inlet **615** to the location defined by the downstream end of L_1) plus L_4.

[**0127**] Some embodiments of the multi-inlet fluid delivery devices may be configured for connection to an infusion pump, and may include a passageway closing structure that can be moved between positions. In one position, the passageway closing structure inhibits some fluid flow through one of the passageways while allowing it through another, and in another position the opposite effect may be achieved. The passageway closing structure may be biased to one of the positions. FIGS. **29-34** depict different aspects of such a fluid delivery device.

[**0128**] Fluid delivery device **800** is similar in some respects to the embodiment of fluid delivery device **100** depicted, for example, in FIGS. **1-2**B. Fluid delivery device **800** includes a body **720** having two fluid delivery passageways, and an adhesive layer **730** attached to the body. Device **800** also may include an insertion device, like insertion device **70**, and a needle guard, like needle guard **80**. Body **720**, and more specifically the cap element of the body, may include rotation-restricting recesses **777** that function like the rotation-restricting recesses described above. Any insertion device used with body **720** may be provided with complimentary rotation-restricting protrusions that function like those described above. Body **720** also includes a needle guard holding recess **747**, which functions like the needle guard holding recesses described above.

[**0129**] Body **720** includes two inlet ports, **705** and **715**. Inlet port **705** (also inlet **705** or entrance opening **705**) is centered within the cap element of body **720**. Inlet port **705** also is perpendicular to the normal direction that fluid delivery device **800** will be installed to a living being, and to an axis (not shown) centered within a portion of the fluid delivery passageway extending from it. Inlet **715** is not centered within the cap element of body **720**. Inlet **715** is oriented at an angle of ninety degrees to the axis centered within the central fluid delivery passageway and to the normal direction of insertion of the device.

[**0130**] Body **720** also includes an inlet fitting **717** extending downstream from inlet **715**.

[**0131**] Inlet fitting **717** defines an outer portion of the laterally-oriented fluid delivery passageway of body **720**, and may be adapted to be releasably coupled to an infusion pump connector fitting. For example, inlet fitting **717**—which is depicted generically in FIGS. **29-34**—may comprise a male or female Luer fitting that can be engaged with a complimentary female or male Luer fitting coupled to a pump through tubing. Inlet fitting **717** may have any configuration suited for being releasably coupled to an infusion pump connector fitting.

[**0132**] FIG. **31** is a cross-sectional view of fluid delivery device **800** in an inserted position. As this figure shows, body **720** includes a cap element **724** and a base element **722**. Cap element **724** includes a cap element attachment protrusion **743**, which functions like the cap element pro-

trusions described above. Base element **722** includes a base element attachment recess **741**, which functions like the base element attachment recesses described above. The cap and base elements of this embodiment may be permanently attached to each other using any of the techniques described above. The two elements may be assembled in a device plane that is perpendicular to the central fluid delivery passageway's axis and to the normal insertion direction of the device. The device plane is defined by the location **729** where the base and cap elements are attached to each other.

[**0133**] FIG. **31** shows that body **720** includes fluid delivery passageway **735** extending from inlet **705** to exit opening **723**, and fluid delivery passageway **745** extending from inlet **715** into fluid delivery passageway **735** at a non-zero angle (such as 90 degrees) that can be measured between an axis centered within a portion of fluid delivery passageway **735** and an axis centered within a portion of fluid delivery passageway **745**. Device **800** also includes a septum **762** positioned within fluid delivery passageway **745**. Septum **762** has an accessible portion that is recessed downstream of inlet **715**. The size of septum **762** can be varied to suit the configuration or configurations of the infusion pump connector fittings with which device **800** works. Such infusion pump connector fittings generally include a septum-piercing element through which fluid flows, and the septum thickness and style (e.g., split vs. non-split) may be configured to work with a given septum-piercing element.

[**0134**] Fluid delivery device **800** includes needle guide **755** that has a portion positioned within, and is coaxial with, fluid delivery passageway **735**. Device **800** also includes a cannula **760** having a portion (in this embodiment, an upper portion) positioned within and coaxial with fluid delivery passageway **735**. In this embodiment, fluid delivery passageway **735**, needle guide **755** and cannula **760** are coaxial with each other. Device **800** also includes another septum **752**, which is separate from septum **762**, having a portion positioned within fluid delivery passageway **735**. Septum **752** is configured like septum **40** from the embodiment of fluid delivery device **100** shown, for example, in FIGS. **1-2**B. Body **720** also includes a sealed body cavity **719**.

[**0135**] Both cannula **760** and needle guide **755** have a side opening (unnumbered) that allows fluid to enter fluid delivery passageway **735** from passageway **745**. Body **720** is characterized by outer perimeter **737**.

[**0136**] FIGS. **31-34** show that fluid delivery device **800** also includes a passageway closing structure **790**. In this embodiment, the passageway closing structure is disposed in fluid delivery passageway **735** (and, in this embodiment, within the needle guide passageway) and is coupled to needle guide **755**. Passageway closing structure **790** in this embodiment is biased toward a first position, shown in FIG. **31**, that at least partially blocks, or obstructs, fluid delivery passageway **735** while leaving fluid delivery passageway **745** substantially (and, in this embodiment, completely) unobstructed. As a result, when an infusion pump is coupled to device **800** via inlet fitting **717**, fluid can flow from the pump and through fluid delivery passageway **745**, into fluid delivery passageway **735**, and through a lower portion of fluid delivery passageway **735**. At the same time, passageway closing structure **790** prevents fluid from flowing unobstructed in a downstream direction through the portion of fluid delivery passageway **735** that is upstream of the junction location of the two passageways.

[**0137**] Passageway closing structure **790** may have any suitable shape. For example, it may have an edge that is curved to match the configuration of the portion of the inner wall of needle guide **755** that it contacts or approaches in the first position. Furthermore, if passageway closing structure **790** is structured to contact needle guide **755** (opposite its coupling location to needle guide **755**) in order to at least partially block fluid flow through fluid delivery passageway **735**, the passageway closing structure may be coated with a material that helps to increase the friction between it and needle guide **755** in order to help it maintain its first position. Passageway closing structure **790** may be made from any suitable material. For example, passageway closing structure **790** may be made from the same material as needle guide **755** in some embodiments, and from a different material in other embodiments. Passageway closing structure may be biased to the first position shown in FIG. **31** in any suitable fashion. For example, passageway closing structure **790** may be biased using a spring, superelastic or shape memory properties of a material, or magnetic forces. Other biasing techniques may be used. Furthermore, in other embodiments, passageway closing structure **790** may be biased to the second position shown in FIG. **32** such that it is moved to the FIG. **31** first position by fluid flowing into fluid delivery passageway **735** from fluid delivery passageway **745**, such as fluid driven by a pump.

[**0138**] FIG. **32** depicts the result of moving passageway closing structure **790** to a second position using an injection device (such as injection device **90**) in which the passageway closing structure at least partially (more preferably substantially, and most preferably completely) blocks fluid from flowing through fluid delivery passageway **745**, while allowing fluid to flow through fluid delivery passageway **735**. More specifically, passageway closing structure **790** in the second position at least partially (more preferably substantially, and most preferably completely) blocks fluid from flowing through fluid delivery passageway **745** and out of body **720**, while allowing fluid to flow through fluid delivery passageway **735** and out of body **720**.

[**0139**] FIGS. **33** and **34** are enlarged detail views of the cross-sections shown in FIGS. **31** and **32**, respectively. They show close-ups of passageway closing structure **790** in the second position (FIG. **33**) as a result of the force applied by injection needle **93**, and in the first position (FIG. **34**) again after the needle has been removed.

[**0140**] FIGS. **35** and **36** show enlarged detail views of another embodiment of passageway closing structure **790**. In this embodiment, passageway closing structure **790** is made from the same material as needle guide **755**, and, more specifically, is cut from (stamped from, etc.) the needle guide material. In this embodiment passageway closing structure **790** is disposed in fluid delivery passageway **735**. It also is disposed in the needle guide passageway in the first position (FIG. **36**) but not the second position (FIG. **35**). In this embodiment, needle guide **755** and passageway closing structure **790** may be made from a material, such as a nickel-titanium alloy, that is treated to have superelastic properties such that it can be biased (e.g., resiliently biased) in a first position, forced into a second position, and then returns substantially to the first position when the second position force is removed.

[**0141**] Another multi-inlet embodiment that includes a passageway closing structure is depicted in FIGS. **37-43**.

Fluid delivery device **900** is similar to fluid delivery device **800**, except that device **900** includes passageway closing structure **791** instead of passageway closing structure **790**. Passageway closing structure **791** may achieve the same result as passageway closing structure **790**, but does so in a different way. The embodiments of cap element **724** and base element **722** of device **900** are similar to the embodiments of those elements in device **800**, except that they are configured to work with passageway closing structure **791**. As a result, both elements include a slot in which passageway closing structure **791** can slide.

[**0142**] Passageway closing structure **791** is shown in perspective in FIG. **39**. It includes a passageway blocking cap **793** that is configured to reside outside of fluid delivery passageway **735** in the first position, which at least partially (more preferably substantially, and most preferably completely) blocks fluid from flowing through fluid delivery passageway **735** and out of body **720**. Cap **793** achieves this blocking because it is positioned to prevent fluid from entering fluid delivery passageway **735** through inlet **705** by covering inlet **705**. Cap **793** is shaped like a partial disc that has a diameter greater than the diameter of inlet **705**. Passageway blocking cap **793** is coupled to (and, in this embodiment, integrally formed with) passageway blocking section **795**, which is shaped (in this embodiment) like part of a cylinder. Passageway blocking cap **793** is oriented substantially perpendicular to the axis about which section **795** pivots, or rotates. Passageway blocking section **795** includes an opening **797** through which fluid from fluid delivery passageway **745** can flow when passageway closing structure **791** is in its first position. As FIG. **39** shows, passageway closing structure **791** may be configured such that, when in its first position, an axis X_{793} that runs through the center of cap **793** intersects an axis X_{797} that runs through the center of opening **797**.

[**0143**] FIGS. **40-43** illustrate how passageway closing structure **791** pivots, and the slots in the cap and base elements of body **720** that enable it to do so. FIG. **40** is another perspective view of fluid delivery device **900**, and shows passageway closing structure **791** in a first position in which fluid flow into and through fluid delivery passageway **735** is blocked because passageway blocking cap **793** is covering inlet **705**. FIG. **41** is a perspective cross-sectional view of device **900**, taken along line **41-41** in FIG. **40**. This figure shows that cap element **724** includes a slot **792**, which in this embodiment is arcuate-shaped, that receives a portion of passageway blocking section **795** of structure **791**. Base element includes a slot **794**, which is also arcuate-shaped, that receives a lower portion of passageway blocking section **795**.

[**0144**] In the first position shown in FIGS. **40** and **41**, opening **797** of passageway blocking structure **791** is aligned with a portion of fluid delivery passageway **745**, thus allowing fluid to flow through it, into a lower portion of fluid delivery passageway **735**, and out of body **720**. The fluid that flows through substantially unobstructed fluid delivery passageway **745** may be injected using a pump (not shown) that is coupled to device **900** through inlet fitting **717**.

[**0145**] In the second position shown in FIGS. **42** and **43**, a portion of passageway blocking section **795** has been pivoted into the path of the portion of fluid delivery passageway **745** that was aligned with opening **797** in the first position. In addition, cap **793** has been pivoted out of the path of inlet **705**. As a result, fluid can flow into and through fluid delivery passageway **735**, but fluid cannot flow through fluid delivery passageway **745** and out of body **720**. The axis (not shown) about which passageway blocking structure **791** pivots is substantially parallel to (a) an axis centered within a portion of fluid delivery passageway **735**, and (b) the normal direction of insertion of device **900** into a living being.

[**0146**] The present fluid delivery systems may include on or more of the present fluid delivery devices that are sterilized (e.g., with ethylene oxide or gamma radiation) and sealed in a package, which may take the form of a pouch, tray, box (such as a box containing multiple trays), tube, or the like. The package may include instructions for use on the outside of the package or on material (e.g., a folded piece of paper) placed in the package. In some embodiments of systems that include a package containing multiple trays for resale, one set of instructions for use may be placed in the package. The systems also may include a vial or vials of fluid to be delivered to the user (such as insulin).

[**0147**] The materials from which the elements of the present fluid delivery devices may be made should be biocompatible. The septa that may be used with some embodiments of the present fluid delivery devices may be characterized as self-sealing septa, or resealing septa, and may be made from a resilient material. One example of a suitable material for such septa is silicone elastomer, which may be described as an elastomeric material, although other materials may be used. If the injection structure chosen to inject fluid into a given embodiment of the present fluid delivery devices is an injection needle, the injection needle used should be sized such that the septum will reseal when the needle is withdrawn. For example, the needle size should be chosen in light of the septum material and the radial pressure the needle will exert on the septum material it contacts such that the needle does not leave a septum opening when withdrawn that is large enough for fluid to leak upstream through it.

[**0148**] The bodies of the present fluid delivery devices (e.g., both the caps and bases of the two-element bodies) may be made from many different materials, such as any suitable medical grade plastic. The insertion hubs (or handles) (e.g., insertion hub **74**) of the present fluid delivery devices that include them also may be made, for example, from any suitable medical grade plastic. The insertion structures (e.g., insertion needle **72**) of the present fluid delivery devices that include them may be made from any suitable material, such as stainless steel or a suitably rigid polymer. The needle guides (e.g., needle guide **50**) of the present fluid delivery devices that include them may be made from any suitable material, such as stainless steel, although other materials may be used. The embodiments of the present needle guides that are made from metal, such as an alloy, may be characterized as metal needle guides. The soft cannulas (e.g., cannula **60**) of the present fluid delivery devices that include them may be made from many different materials, such as any suitable medical grade plastic. Those that are not made from metal may be characterized as non-rigid cannulas or non-metal cannulas.

[**0149**] The needle guards (e.g., needle guard **80**) of the present fluid delivery devices that include them may be

made from many different materials, such as any suitable medical grade plastic. The adhesive layers or pads (e.g., adhesive layer **30**) of the present fluid delivery devices that include them may be made from any suitable material, and any adhesive that is used may include an anti-bacterial and/or healing promotion substance (such as dexamethasone, or the like) that reduces the risk of infection and speeds the healing process once the fluid delivery device is removed from the user. The rigid cannulas (e.g., cannula **260**) of the present fluid delivery devices that include them may be made from any suitable material—such as stainless steel, any suitable alloy or any suitably rigid polymer. Versions of the present rigid cannulas that are made from metal may (in such embodiments) be characterized as metal cannulas.

[**0150**] If a medical grade plastic is used for one of the elements discussed above, the material chosen may, be translucent, transparent, semi-transparent, or opaque in different embodiments.

[**0151**] Embodiments of the present fluid delivery devices that use a soft cannula may be inserted using any well-known and appropriately configured insertion device, such as the insertion devices shown in FIGS. **1-4**. Inserting one of the present fluid delivery devices into a user using only such an insertion device may be characterized as non-spring driven insertion, or insertion using force applied directly by hand. Other suitable insertion devices include those that are triggered by releasing the potential force built up in a compressed spring. Insertion using a spring-driven device may be characterized as spring-driven insertion. Some embodiments of such devices may be used with the insertion device shown in FIGS. **1-4** to achieve insertion of one of the present fluid delivery devices into a user. Still other insertion devices could be computer-controlled. Other forces that may be used to insert one of the present fluid delivery device into a user include pneumatic and hydraulic forces. In general, insertion of the embodiments of the present insertion devices that include non-rigid cannulas without any reinforcing coating should be relatively quick and forceful to reduce the chance of the cannula crimping or bending during insertion. The insertion of embodiments that include a rigid cannula or a non-rigid cannula that has been reinforced in some manner may be achieved more slowly and, in some cases, with less force.

[**0152**] As an alternative to the use of insertion devices with needles for inserting embodiments of the present fluid delivery devices that have a non-rigid cannula, an outer surface of the exposed portion of the cannula may be coated with a fluid soluble coating that provides a sharp tip, or point, at the end of the cannula, but that dissolves in the bodily fluids of the user after insertion. Such a coating is described in paragraphs 0035 to 0045 of U.S. Patent Application Pub. No. 2002/0072720, which paragraphs are incorporated by reference.

[**0153**] Different injection devices may be used to facilitate the delivery of fluid to, for example, the subcutaneous tissue of a user. For example, a standard syringe and syringe needle may be used. The syringe needle may be sharp and open at its end, sharp and open somewhere along its shaft other than at its end, blunt and open at its end, or blunt and open somewhere along its shaft other than at its end. Other suitable injection devices include pen-like devices having some sort of needle that is generally concealed. Injection of fluid into a patient using one of these injection devices may be characterized as delivering fluid to a user from a non-pump source, or delivering fluid to a user from a source that is not connected to a pump. In other embodiments of the present devices, systems and methods, a pump may be used in the fluid delivery process. For example, this is true of the fluid delivery devices that include an inlet fitting such as inlet fitting **717**.

[**0154**] While the target tissue of a patient may be pinched and/or pulled outwardly from the body slightly to isolate it, insertion of one of the present fluid delivery devices into the tissue of a user still may, in some embodiments, be characterized as being at a substantially perpendicular angle to a target skin location of a user/living being because the rigid cannula or non-rigid cannula and insertion structure will enter the user's tissue at an angle that is substantially perpendicular to the plane in which the target tissue lies.

[**0155**] Some embodiments of the present methods include the use of the insertion and/or injection techniques described above.

[**0156**] The present fluid delivery devices, systems and methods are not intended to be limited to the particular forms disclosed. Rather, they include all modifications, equivalents, and alternatives falling within the scope of the claims. For example, the cap elements of the multi-element embodiments that include them can have configurations other than those depicted in the figures. Such cap elements may have an inlet that is not circular (e.g., the inlet may be rectangular, hexagonal, or octagonal), and the wall of the portion of the cap element that forms the upper portion of a given fluid delivery passageway may be straight-walled, may have a taper of constant angle, or may have a taper of non-constant angle.

[**0157**] As another example, multiple cannulas may extend from and be coupled to a body of one of the present fluid delivery devices such that the delivery of medication may be spread to different areas of a user's tissue. For example, a single inlet may be in fluid communication with multiple cannulas positioned to delivery fluid to a target tissue location; alternatively, a body may have multiple inlets, each of which is in fluid communication with a cannula positioned to deliver fluid to a target tissue location.

[**0158**] As another example, in some embodiments of the present fluid delivery systems, the package containing one or more of the present fluid delivery devices also may include one or more capsules, or vials, containing a prescribed amount of fluid. The package also may include a pump and associated tubing for coupling to a fitting such an inlet fitting **717**.

[**0159**] As another example, some embodiments of the present fluid delivery devices that include a fluid delivery passageway having a portion oriented at an angle that is not parallel to the normal direction of insertion of the device may have only one inlet (although two inlets are illustrated in FIGS. **27** and **31**, for example). Some embodiments of such a device may include a rigid cannula having a sharp end, and the cannula may be oriented with respect to the body as shown, for example, in FIG. **18**. Some embodiments of such a device also may include only one fluid delivery passageway that includes a portion angled at a non-parallel angle to the normal direction of insertion device and another portion angled parallel to the normal direction of insertion.

[0160] As another example, an upper portion of a given fluid delivery passageway (including the inlet) may be set at an angle other than parallel to an intended direction of insertion for the device. Similarly, any portion of the cannula that is exposed when not inserted into a user (no such portions are shown in the figures, but may exist) may be set at a non-parallel angle to an intended direction of insertion for the device.

[0161] As another example, the needle guides shown in the figures are configured such that at least some open space exists below the bottommost portion of the septum positioned within the needle guide and above the beginning of the straight-walled portion of the needle guide. In other embodiments, the bottommost portion of the septum positioned within the needle guide may extend even further downstream such that there is less such open space than what is shown in the figures down to no such open space. In some embodiments of the present fluid delivery devices, one may want to put the length (or thickness) of the septum in compression to cause the septum to exert a radial force on the needle guide that tends to restrict upstream and downstream movement of the septum relative to the needle guide. Having at least some open space beneath the bottommost portion of the septum and the uppermost portion of the straight-walled portion of the needle guide may facilitate such compression.

[0162] The claims are not to be interpreted as including means-plus- or step-plus-function limitations, unless such a limitation is explicitly recited in a given claim using the phrase(s) "means for" or "step for," respectively.

1.-**263**. (canceled)

264. A fluid delivery device comprising:

a body having a fluid delivery passageway;

a cannula having a portion positioned within the fluid delivery passageway;

a needle guide having a portion positioned within the cannula;

a non-split septum having a portion positioned within the needle guide; and

an engagement surface configured to be in contact with a living being's skin when the fluid delivery device is used;

where a portion of the fluid delivery passageway is substantially perpendicular to the engagement surface.

265. A fluid delivery device comprising:

a body having a fluid delivery passageway inlet, a fluid delivery passageway extending from the fluid delivery passageway inlet, and an inlet boundary extending upstream and downstream from the fluid delivery passageway inlet parallel to an axis centered within a portion of the first fluid delivery passageway;

a cannula having a cannula passageway and a portion positioned within the fluid delivery passageway, the cannula passageway having a smallest internal diameter;

a needle guide having a portion positioned within the cannula passageway;

a non-split septum having an outer surface that includes an exposed portion located within the inlet boundary and a remaining non-exposed portion, the exposed portion having a greatest width that is greater than twice the smallest internal diameter; and

an engagement surface configured to be in contact with a living being's skin when the fluid delivery device is used;

where a portion of the fluid delivery passageway is substantially perpendicular to the engagement surface, and the fluid delivery is being configured such that an injection needle that enters the exposed portion of the non-split septum in a downstream direction and exits the non-split septum through the remaining non-exposed portion either (a) exits the non-split septum into open space that is (i) within the fluid delivery passageway and (ii) downstream of the part, or (b) contacts a portion of the fluid delivery device that is tapered inwardly.

266. A fluid delivery device comprising:

a body having an inlet port, a fluid delivery passageway extending from the inlet port, and an inlet boundary extending upstream and downstream from the inlet port parallel to an axis centered within a portion of the fluid delivery passageway;

a cannula having a cannula passageway and a portion positioned within the fluid delivery passageway, the cannula passageway having a smallest internal diameter;

a needle guide having a portion positioned within the cannula passageway;

a non-split septum having an outer surface that includes an exposed portion located within the inlet boundary and a remaining non-exposed portion, the exposed portion having a greatest width that is greater than twice the smallest internal diameter; and

an engagement surface configured to be in contact with a living being's skin when the fluid delivery device is used;

where a portion of the fluid delivery passageway is substantially perpendicular to the engagement surface, and the fluid delivery device is configured such that an injection needle that enters the exposed portion of the non-split septum in a downstream direction and exits the non-split septum (a) through part of the remaining non-exposed portion that is substantially perpendicular to the axis or (b) through part of the remaining non-exposed portion that has a tangent that is not parallel to the axis, exits the non-split septum into open space that is (c) within the first fluid delivery passageway and (d) downstream of the part through which the injection needle exited.

267. A fluid delivery device comprising:

a body having an inlet port, a fluid delivery passageway extending from the inlet port, and an inlet boundary extending upstream and downstream from the inlet port parallel to an axis centered within a portion of the fluid delivery passageway;

a cannula having a portion that is coaxial with a portion of the fluid delivery passageway, the cannula also having a cannula passageway having a smallest internal diameter;

a septum having an outer surface that includes an exposed portion located within the inlet boundary and a remaining non-exposed portion, the exposed portion having a greatest width that is greater than twice the smallest internal diameter; and

a needle control portion configured to prevent a needle sized to inject fluid through the fluid delivery device and into a living being from piercing the cannula during normal fluid injection;

the fluid delivery device also being configured such that an injection needle that enters the exposed portion of the septum in a downstream direction and exits the septum through part of the remaining non-exposed portion that is not parallel to the axis either (a) exits the septum into open space that is (i) within the fluid delivery passageway and (ii) downstream of the part, or (b) contacts a portion of the fluid delivery device that is tapered inwardly.

268. The fluid delivery device of claim 267, where the cannula is integrally formed with, and extends away from, the body.

269. A fluid delivery device comprising:

a body having an inlet port, a fluid delivery passageway extending from the inlet port, and an inlet boundary extending upstream and downstream from the inlet port parallel to an axis centered within a portion of the fluid delivery passageway;

a cannula having a portion that is coaxial with a portion of the fluid delivery passageway, the cannula also having a cannula passageway having a smallest internal diameter;

a septum having an outer surface that includes an exposed portion located within the inlet boundary and a remaining non-exposed portion, the exposed portion having a greatest width that is greater than twice the smallest internal diameter; and

a needle control portion configured to prevent a needle sized to inject fluid through the fluid delivery device and into a living being from piercing the cannula during normal fluid injection;

the fluid delivery device being configured such that an injection needle that enters the exposed portion of the septum in a downstream direction and exits the septum (a) through part of the remaining non-exposed portion that is substantially perpendicular to the axis or (b) through part of the remaining non-exposed portion that has a tangent that is not parallel to the axis, exits the septum into open space that is (c) within the first fluid delivery passageway and (d) downstream of the part through which the injection needle exited.

270. The fluid delivery device of claim 269, where the cannula is integrally formed with, and extends away from, the body.

271. A fluid delivery device comprising:

a body having an inlet port, a fluid delivery passageway extending from the inlet port, and an inlet boundary extending upstream and downstream from the inlet port parallel to an axis centered within a portion of the fluid delivery passageway;

a cannula having a portion that is coaxial with a portion of the fluid delivery passageway, the cannula also having a cannula passageway having a smallest internal diameter; and

a non-split septum having an outer surface that includes an exposed portion located within the inlet boundary and a remaining non-exposed portion, the exposed portion having a greatest width that is greater than twice the smallest internal diameter;

the fluid delivery device being configured such that an injection needle that enters the exposed portion of the non-split septum in a downstream direction and exits the non-split septum (a) through part of the remaining non-exposed portion that is substantially perpendicular to the axis or (b) through part of the remaining non-exposed portion that has a tangent that is not parallel to the axis, exits the non-split septum into open space that is (c) within the first fluid delivery passageway and (d) downstream of the part through which the injection needle exited.

272. The fluid delivery device of claim 271, where the non-split septum has an outer surface area, the majority of which is in contact with other material of the fluid delivery device.

273. The fluid delivery device of claim 271, where the body has a convex shape.

274. The fluid delivery device of claim 271, where the cannula is integrally formed with, and extends away from, the body.

275. The fluid delivery device of claim 271, where the outer surface of the non-split septum includes one or more sections that are parallel to the axis, and a majority of the one or more sections is in contact with a surrounding portion or portions of the fluid delivery device.

276. The fluid delivery device of claim 275, where the surrounding portion or portions of the fluid delivery device comprise body material.

277. The fluid delivery device of claim 271, where the non-split septum has a height that runs in a direction parallel to the axis and a middle that is one-half of the height, the middle being in contact with a surrounding portion of the fluid delivery device.

278. The fluid delivery device of claim 277, where the surrounding portion comprises body material.

279. The fluid delivery device of claim 271, where the non-split septum has a height that runs in a direction parallel to the axis and a middle that is one-half of the height, the middle being radially compressed by a surrounding portion of the fluid delivery device.

280. The fluid delivery device of claim 279, where the surrounding portion comprises body material.

* * * * *