US007381184B2

(12) United States Patent
Funderburk et al.

(10) Patent No.: US 7,381,184 B2
(45) Date of Patent: Jun. 3, 2008

(54) **SENSOR INSERTER ASSEMBLY**

(75) Inventors: **Jeffery V. Funderburk**, Fremont, CA (US); **Duane O. Yamasaki**, El Cerrito, CA (US); **Brian VanHiel**, Marietta, GA (US); **Stephen J. Flynn**, Peachtree City, GA (US); **Bradley D. Kelemen**, Longmont, CO (US)

(73) Assignee: **Abbott Diabetes Care Inc.**, Alameda, CA (US)

(*) Notice: Subject to any disclaimer, the term of this patent is extended or adjusted under 35 U.S.C. 154(b) by 655 days.

(21) Appl. No.: **10/703,214**

(22) Filed: **Nov. 5, 2003**

(65) **Prior Publication Data**

US 2004/0133164 A1 Jul. 8, 2004

Related U.S. Application Data

(60) Provisional application No. 60/424,099, filed on Nov. 5, 2002.

(51) **Int. Cl.**

A61B 5/00	(2006.01)
A61B 17/32	(2006.01)
A61B 17/34	(2006.01)
A61M 31/00	(2006.01)

(52) **U.S. Cl.** **600/300**; 600/309; 600/341; 604/57; 604/59; 606/182; 606/185

(58) **Field of Classification Search** 606/117, 606/188, 182; 600/300, 309, 341, 344; 607/59
See application file for complete search history.

(56) **References Cited**

U.S. PATENT DOCUMENTS

3,260,656 A 7/1966 Ross, Jr.

(Continued)

FOREIGN PATENT DOCUMENTS

DE 29 03 216 8/1979

(Continued)

OTHER PUBLICATIONS

Abruna, H. D. et al., "*Rectifying Interfaces Using Two-Layer Films of Electrochemically Polymerized Vinylpyridine and Vinylbipyridine Complexes of Ruthenium and Iron on Electrodes*," J. Am. Chem. Soc., 103 (1):1-5 (Jan. 14, 1981).

(Continued)

Primary Examiner—Robert L. Naser, Jr.
Assistant Examiner—Patricia Mallari
(74) *Attorney, Agent, or Firm*—Gina C. Freschi; Bozicevic, Field & Francis LLP

(57) **ABSTRACT**

An analyte monitor includes a sensor, a sensor control unit, and a display unit. The sensor control unit typically has a housing adapted for placement on skin and is adapted to receive a portion of an electrochemical sensor. The sensor control unit also includes two or more conductive contacts disposed on the housing and configured for coupling to two or more contact pads on the sensor. A transmitter is disposed in the housing and coupled to the plurality of conductive contacts for transmitting data obtained using the sensor. The display unit has a receiver for receiving data transmitted by the transmitter of the sensor control unit and a display coupled to the receiver for displaying an indication of a level of an analyte, such as blood glucose. An inserter having a retractable introducer is provided for subcutaneously implanting the sensor in a predictable and reliable fashion.

12 Claims, 27 Drawing Sheets

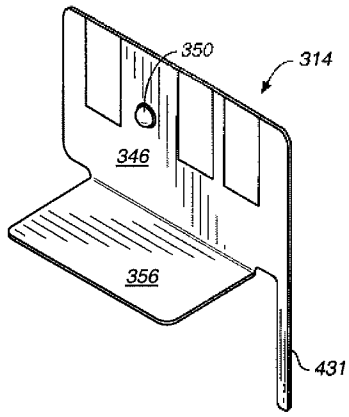

DEXCOM
EXHIBIT 1128

U.S. PATENT DOCUMENTS

3,653,841	A	4/1972	Klein
3,719,564	A	3/1973	Lilly, Jr. et al.
3,776,832	A	12/1973	Oswin et al.
3,837,339	A	9/1974	Aisenberg et al.
3,926,760	A	12/1975	Allen et al.
3,972,320	A	8/1976	Kalman
3,979,274	A	9/1976	Newman
4,008,717	A	2/1977	Kowarski
4,016,866	A	4/1977	Lawton
4,055,175	A	10/1977	Clemens et al.
4,059,406	A	11/1977	Fleet
4,076,596	A	2/1978	Connery et al.
4,098,574	A	7/1978	Dappen
4,100,048	A	7/1978	Pompei et al.
4,129,128	A	12/1978	McFarlane
4,151,845	A	5/1979	Clemens
4,168,205	A	9/1979	Danninger et al.
4,172,770	A	10/1979	Semersky et al.
4,178,916	A	12/1979	McNamara
4,206,755	A	6/1980	Klein
4,224,125	A	9/1980	Nakamura et al.
4,240,438	A	12/1980	Updike et al.
4,247,297	A	1/1981	Berti et al.
4,340,458	A	7/1982	Lerner et al.
4,352,960	A	10/1982	Dormer et al.
4,356,074	A	10/1982	Johnson
4,365,637	A	12/1982	Johnson
4,366,033	A	12/1982	Richter et al.
4,375,399	A	3/1983	Havas et al.
4,384,586	A	5/1983	Christiansen
4,390,621	A	6/1983	Bauer
4,401,122	A	8/1983	Clark, Jr.
4,404,066	A	9/1983	Johnson
4,418,148	A	11/1983	Oberhardt
4,427,770	A	1/1984	Chen et al.
4,431,004	A	2/1984	Bessman et al.
4,436,094	A	3/1984	Cerami
4,440,175	A	4/1984	Wilkins
4,450,842	A	5/1984	Zick et al.
4,458,686	A	7/1984	Clark, Jr.
4,461,691	A	7/1984	Frank
4,469,110	A	9/1984	Slama
4,477,314	A	10/1984	Richter et al.
4,484,987	A	11/1984	Gough
4,522,690	A	6/1985	Venkatasetty
4,524,114	A	6/1985	Samuels et al.
4,526,661	A	7/1985	Steckhan et al.
4,534,356	A	8/1985	Papadakis
4,538,616	A	9/1985	Rogoff
4,543,955	A	10/1985	Schroeppel
4,545,382	A	10/1985	Higgins et al.
4,552,840	A	11/1985	Riffer
4,560,534	A	12/1985	Kung et al.
4,571,292	A	2/1986	Liu et al.
4,573,994	A	3/1986	Fischell et al.
4,581,336	A	4/1986	Malloy et al.
4,595,011	A	6/1986	Phillips
4,619,754	A	10/1986	Niki et al.
4,627,445	A	12/1986	Garcia et al.
4,627,908	A	12/1986	Miller
4,633,878	A	1/1987	Bombardieri
4,637,403	A	1/1987	Garcia et al.
4,650,547	A	3/1987	Gough
4,654,197	A	3/1987	Lilja et al.
4,655,880	A	4/1987	Liu
4,655,885	A	4/1987	Hill et al.
4,671,288	A	6/1987	Gough
4,679,562	A	7/1987	Luksha
4,680,268	A	7/1987	Clark, Jr.
4,682,602	A	7/1987	Prohaska
4,684,537	A	8/1987	Graetzel et al.
4,685,463	A	8/1987	Williams
4,703,756	A	11/1987	Gough et al.
4,711,245	A	12/1987	Higgins et al.
4,717,673	A	1/1988	Wrighton et al.
4,721,601	A	1/1988	Wrighton et al.
4,721,677	A	1/1988	Clark, Jr.
4,726,378	A	2/1988	Kaplan
4,726,716	A	2/1988	McGuire
4,731,726	A	3/1988	Allen, III
4,757,022	A	7/1988	Shults et al.
4,758,323	A	7/1988	Davis et al.
4,759,371	A	7/1988	Franetzki
4,759,828	A	7/1988	Young et al.
4,764,416	A	8/1988	Ueyama et al.
4,776,944	A	10/1988	Janata et al.
4,781,798	A	11/1988	Gough
4,784,736	A	11/1988	Lonsdale et al.
4,795,707	A	1/1989	Niiyama et al.
4,796,634	A	1/1989	Huntsman et al.
4,805,624	A	2/1989	Yao et al.
4,813,424	A	3/1989	Wilkins
4,815,469	A	3/1989	Cohen et al.
4,820,399	A	4/1989	Senda et al.
4,822,337	A	4/1989	Newhouse et al.
4,830,959	A	5/1989	McNeil et al.
4,832,797	A	5/1989	Vadgama et al.
RE32,947	E	6/1989	Dormer et al.
4,840,893	A	6/1989	Hill et al.
4,848,351	A	7/1989	Finch
4,871,351	A	10/1989	Feingold
4,871,440	A	10/1989	Nagata et al.
4,874,500	A	10/1989	Madou et al.
4,890,620	A	1/1990	Gough
4,894,137	A	1/1990	Takizawa et al.
4,897,162	A	1/1990	Lewandowski et al.
4,897,173	A	1/1990	Nankai et al.
4,909,908	A	3/1990	Ross et al.
4,911,794	A	3/1990	Parce et al.
4,917,800	A	4/1990	Lonsdale et al.
4,919,141	A	4/1990	Zier et al.
4,919,767	A	4/1990	Vadgama et al.
4,923,586	A	5/1990	Katayama et al.
4,927,516	A	5/1990	Yamaguchi et al.
4,934,369	A	6/1990	Maxwell
4,935,105	A	6/1990	Churchouse
4,935,345	A	6/1990	Guilbeau et al.
4,938,860	A	7/1990	Wogoman
4,944,299	A	7/1990	Silvian
4,950,378	A	8/1990	Nagata
4,953,552	A	9/1990	DeMarzo
4,954,129	A	9/1990	Giuliani et al.
4,969,468	A	11/1990	Byers et al.
4,970,145	A	11/1990	Bennetto et al.
4,974,929	A	12/1990	Curry
4,986,271	A	1/1991	Wilkins
4,994,167	A	2/1991	Shults et al.
5,001,054	A	3/1991	Wagner
5,035,860	A *	7/1991	Kleingeld et al. 422/61
5,036,860	A *	8/1991	Leigh et al. 600/567
5,050,612	A	9/1991	Matsumura
5,058,592	A	10/1991	Whisler
5,070,535	A	12/1991	Hochmair et al.
5,082,550	A	1/1992	Rishpon et al.
5,082,786	A	1/1992	Nakamoto
5,089,112	A	2/1992	Skotheim et al.
5,095,904	A	3/1992	Seligman et al.
5,101,814	A	4/1992	Palti
5,108,564	A	4/1992	Szuminsky et al.
5,109,850	A	5/1992	Blanco et al.
5,120,420	A	6/1992	Nankai et al.
5,126,034	A	6/1992	Carter et al.
5,133,856	A	7/1992	Yamaguchi et al.
5,135,003	A	8/1992	Souma

5,141,868 A 8/1992 Shanks et al.
5,161,532 A 11/1992 Joseph
5,165,407 A 11/1992 Wilson et al.
5,174,291 A 12/1992 Schoonen et al.
5,190,041 A 3/1993 Palti
5,192,416 A 3/1993 Wang et al.
5,198,367 A 3/1993 Aizawa et al.
5,202,261 A 4/1993 Musho et al.
5,205,920 A 4/1993 Oyama et al.
5,208,154 A 5/1993 Weaver et al.
5,209,229 A 5/1993 Gilli
5,217,595 A 6/1993 Smith et al.
5,229,282 A 7/1993 Yoshioka et al.
5,250,439 A 10/1993 Musho et al.
5,262,035 A 11/1993 Gregg et al.
5,262,305 A 11/1993 Heller et al.
5,264,103 A 11/1993 Yoshioka et al.
5,264,104 A 11/1993 Gregg et al.
5,264,106 A 11/1993 McAleer et al.
5,271,815 A 12/1993 Wong
5,279,294 A 1/1994 Anderson et al.
5,284,156 A * 2/1994 Schramm et al. 600/567
5,286,362 A 2/1994 Hoenes et al.
5,286,364 A 2/1994 Yacynych et al.
5,288,636 A 2/1994 Pollmann et al.
5,293,546 A 3/1994 Tadros et al.
5,320,098 A 6/1994 Davidson
5,320,725 A 6/1994 Gregg et al.
5,322,063 A 6/1994 Allen et al.
5,337,747 A 8/1994 Neftel
5,352,348 A 10/1994 Young et al.
5,356,786 A 10/1994 Heller et al.
5,368,028 A 11/1994 Palti
5,372,133 A 12/1994 Hogen Esch
5,376,251 A 12/1994 Kaneko et al.
5,378,628 A 1/1995 Gratzel et al.
5,387,327 A 2/1995 Khan
5,390,671 A 2/1995 Lord et al.
5,391,250 A 2/1995 Cheney, II et al.
5,395,504 A 3/1995 Saurer et al.
5,400,782 A 3/1995 Beaubiah
5,411,647 A 5/1995 Johnson et al.
5,431,160 A 7/1995 Wilkins et al.
5,437,999 A 8/1995 Diebold et al.
5,469,846 A 11/1995 Khan
5,491,474 A 2/1996 Suni et al.
5,494,562 A 2/1996 Maley et al.
5,496,453 A 3/1996 Uenoyama et al.
5,497,772 A 3/1996 Schulman et al.
5,531,878 A 7/1996 Vadgama et al.
5,545,191 A 8/1996 Mann et al.
5,560,357 A 10/1996 Faupel et al.
5,562,713 A 10/1996 Silvian
5,565,085 A 10/1996 Ikeda et al.
5,567,302 A 10/1996 Song et al.
5,568,806 A 10/1996 Cheney, II et al.
5,569,186 A 10/1996 Lord et al.
5,582,184 A 12/1996 Erickson et al.
5,582,697 A 12/1996 Ikeda et al.
5,582,698 A 12/1996 Flaherty et al.
5,586,553 A 12/1996 Halili et al.
5,589,326 A 12/1996 Deng et al.
5,593,852 A 1/1997 Heller et al.
5,596,150 A 1/1997 Arndt et al.
5,617,851 A 4/1997 Lipkovker
5,628,890 A 5/1997 Carter et al.
5,651,869 A 7/1997 Yoshioka et al.
5,660,163 A 8/1997 Schulman et al.
5,670,031 A 9/1997 Hintsche et al.
5,680,858 A 10/1997 Hansen et al.
5,682,233 A 10/1997 Brinda
5,695,623 A 12/1997 Michel et al.
5,708,247 A 1/1998 McAleer et al.
5,711,297 A 1/1998 Iliff et al.
5,711,861 A 1/1998 Ward et al.
5,711,862 A 1/1998 Sakoda et al.
5,741,211 A 4/1998 Renirie et al.
5,771,001 A 6/1998 Cobb
5,791,344 A 8/1998 Schulman et al.
5,800,420 A 9/1998 Gross et al.
5,807,375 A 9/1998 Gross et al.
5,820,551 A 10/1998 Hill et al.
5,820,622 A 10/1998 Gross et al.
5,822,715 A 10/1998 Worthington et al.
5,827,184 A 10/1998 Netherly et al.
5,840,020 A 11/1998 Heinonen et al.
5,842,983 A 12/1998 Abel et al.
5,885,211 A 3/1999 Eppstein et al.
5,899,855 A 5/1999 Brown
5,954,643 A 9/1999 VanAntwerp et al.
5,954,685 A 9/1999 Tierney
5,957,854 A 9/1999 Besson et al.
5,964,993 A 10/1999 Blubaugh et al.
5,971,922 A 10/1999 Arita et al.
6,001,067 A 12/1999 Shults et al.
6,024,699 A 2/2000 Surwit et al.
6,093,172 A 7/2000 Funderburk et al.
6,122,351 A 9/2000 Schlueter, Jr. et al.
6,368,141 B1 4/2002 VanAntwerp et al.
6,368,274 B1 4/2002 Van Antwerp et al.
6,695,860 B1 * 2/2004 Ward et al. 606/185
6,936,006 B2 * 8/2005 Sabra 600/300
2002/0130042 A1 * 9/2002 Moerman et al. 204/403.01
2003/0078560 A1 4/2003 Miller et al.
2004/0002682 A1 1/2004 Kovelman et al.
2004/0064133 A1 4/2004 Miller et al.

FOREIGN PATENT DOCUMENTS

DE 227 029 A3 9/1985
DE 3934299 10/1990
EP 0 010 375 A1 4/1980
EP 0 026 995 A1 4/1981
EP 0 048 090 A2 3/1982
EP 0 078 636 A1 5/1983
EP 0 096 228 A1 12/1983
EP 0 098 592 1/1984
EP 0 125 139 A2 11/1984
EP 0 127 958 A2 12/1984
EP 0 136 362 A1 4/1985
EP 0 170 375 A2 2/1986
EP 0 177 743 A2 4/1986
EP 0 080 304 B1 5/1986
EP 0 184 909 A2 6/1986
EP 0 206 218 A2 12/1986
EP 0 230 472 A1 8/1987
EP 0 241 309 A3 10/1987
EP 0 245 073 A2 11/1987
EP 0 278 647 A2 8/1988
EP 0 359 831 A1 3/1990
EP 0 368 209 5/1990
EP 390 390 A1 10/1990
EP 0 400 918 A1 12/1990
EP 0 453 283 A1 10/1991
EP 0 470 290 A1 2/1992
EP 0 127 958 B2 3/1992
EP 0 255 291 B1 6/1992
GB 1394171 5/1975
GB 1599241 9/1981
GB 2 073 891 10/1981
GB 2 154 003 2/1988
GB 2 204 408 11/1988
GB 2 254 436 10/1992
JP 54-41191 4/1979
JP 55-10581 1/1980
JP 55-10583 1/1980

JP	55-10584		1/1980
JP	55-12406		1/1980
JP	56-163447		12/1981
JP	57-70448		4/1982
JP	60-173457		9/1985
JP	60-173458		9/1985
JP	60-173459		9/1985
JP	62-85855		4/1987
JP	62-114747		5/1987
JP	63-58149		3/1988
JP	63-128252		5/1988
JP	63-139246		6/1988
JP	63-294799		12/1988
JP	63-317757		12/1988
JP	63-317758		12/1988
JP	1-114746		5/1989
JP	1-114747		5/1989
JP	1-124060		5/1989
JP	1-134244		5/1989
JP	1-156658		6/1989
JP	2-62958		3/1990
JP	2-120655		5/1990
JP	2-287145		11/1990
JP	2-310457		12/1990
JP	3-020752		1/1991
JP	3-26956		2/1991
JP	3-202764		9/1991
JP	5-72171		3/1993
JP	5-196595		8/1993
JP	5-190050		7/1994
JP	6-190050		7/1994
JP	7-55757		3/1995
JP	7-72585		3/1995
JP	8-285814		11/1996
JP	8-285815		11/1996
JP	9-21778		1/1997
JP	9-101280		4/1997
JP	9-285459		11/1997
JP	10-170471		6/1998
SU	1281988	A1	1/1987
WO	WO 89/05119		11/1985
WO	WO 89/08713		9/1989
WO	WO 90/05300		5/1990
WO	WO 90/05910		5/1990
WO	WO 91/01680		2/1991
WO	WO 91/04704		4/1991
WO	WO 91/15993		10/1991
WO	WO 92/13271		8/1992
WO	WO 94/20602		9/1994
WO	WO 94/27140		11/1994
WO	WO 96/30431		10/1996
WO	WO 96/35370		11/1996
WO	WO 97/02847		1/1997
WO	WO 97/19344		5/1997
WO	WO 97/42882		11/1997
WO	WO 97/42883		11/1997
WO	WO 97/42886		11/1997
WO	WO 97/42888		11/1997
WO	WO 97/43962		11/1997
WO	WO 2004/028337	A2	4/2004

OTHER PUBLICATIONS

Albery, W. J. et al., "*Amperometric Enzyme Electrodes*," Phil. Trans. R. Soc. Lond. B316:107-119 (1987).

Albery, W. J. et al., "*Amperometric enzyme electrodes. Part II. Conducting salts as electrode materials for the oxidation of glucose oxidase*," J. Electroanal. Chem. Interfacial Electrochem., 194(2) (1 page—Abstract only) (1985).

Alcock, S. J. et al., "*Continuous Analyte Monitoring to Aid Clinical Practice*," IEEE Engineering in Medicine and Biology, 319-325 (1994).

Anderson, L. B. et al., "*Thin-Layer Electrochemistry: Steady-State Methods of Studying Rate Processes*," J. Electroanal. Chem., 10:295-395 (1965).

Armour, J. et al. "*Application of Chronic Intravascular Blood Glucase Sensor in Dogs*," Diabetes, vol. 39 (Dec. 1990), pp. 1519-1526.

Bartlett, P. N. et al., "*Covalent Binding of Electron Relays to Glucose Oxidation*," J. Chem. Soc. Chem. Commun., 1603-1604 (1987).

Bartlett, P. N. et al., "*Modification of glucose oxidase by tetrathiafulvalene*," J. Chem. Soc., Chem. Commun., 16 (1 page—Abstract only) (1990).

Bindra, D.S. et al., "*Design and in Vitro Studies of a Needle-Type Glucose Sensor for Subcutaneous Monitoring*", Anal. Chem., 63(17):1692-1696 (Sep. 1, 1991).

Bobbioni-Harsch, E. et al., "*Lifespan of subcutaneous glucose sensors and their performances during dynamic glycaemia changes in rats*," J. Biomed. Eng. 15:457-463 (1993).

Brandt, J. et al., "*Covalent attachment of proteins to polysaccharide carriers by means of benzoquinone*," Biochim. Biophys. Acta, 386(1) (1 page Abstract only) (1975).

Brownlee, M. et al., "*A Glucose-Controlled Insulin-Delivery System: Semisynthetic Insulin Bound to Lectin*", Science, 206(4423):1190-1191 (Dec. 7, 1979).

Cass, A.E.G. et al., "*Ferricinum Ion As An Electron Acceptor for Oxido-Reductases*," J. Electroanal. Chem., 190:117-127 (1985).

Cass, A.E.G. et al., "*Ferrocene-Mediated Enzyme Electrode for Amperometric Determination of Glucose*", Anal. Chem., 56(4):667-671 (Apr. 1984).

Castner, J. F. et al., "*Mass Transport and Reaction Kinetic Parameters Determined Electrochemically for Immobilized Glucose Oxidase*," Biochemistry, 23(10):2203-2210 (1984).

Claremont, D.J. et al., "*Biosensors for Continuous In Vivo Glucose Monitoring*," IEEE Engineering in Medicine and Biology Society 10th Annual International Conference, New Orleans, Louisiana, 3 pgs. (Nov. 4-7, 1988).

Clark L.C. et al., "*Differential Anodic Enzyme Polarography for the Measurement of Glucose*", Oxygen Transport to Tissue: Instrumentation, Methods, and Physiology, 127-132 (1973).

Clark, L.C. et al., "*Long-term Stability of Electroenzymatic Glucose Sensors Implanted in Mice*," Trans. Am. Soc. Artif. Intern. Organs, XXXIV:259-265 (1988).

Clark, L.C., Jr. et al., "*Electrode Systems for Continuous Monitoring in Cardiovascular Surgery*," Annals New York Academy of Sciences, pp. 29-45 (1962).

Clarke, W. L., et al., "*Evaluating Clinical Accuracy of Systems for Self-Monitoring of Blood Glucose*," Diabetes Care, 10(5):622-628 (Sep.-Oct. 1987).

Csoregi, E. et al., "*Design and Optimization of a Selective Subcutaneously Implantable Glucose Electrode Based on 'Wired' Glucose Oxidase*," Anal. Chem. 67(7):1240-1244 (Apr. 1, 1995).

Csoregi, E. et al., "*Design, Characterization, and One-Point in Vivo Calibration of a Subcutaneously Implanted Glucose Electrode*," Anal. Chem. 66(19):3131-3138 (Oct. 1, 1994).

Csoregi, E. et al., "*On-Line Glucose Monitoring by Using Microdialysis Sampling and Amperometric Detection Based on "Wired" Glucose Oxidase in Carbon Paste*," Mikrochim. Acta. 121:31-40 (1995).

Davis, G., "*Electrochemical Techniques for the Development of Amperometric Biosensors*", Biosensors, 1:161-178 (1985).

Degani, Y. et al., "*Direct Electrical Communication between Chemically Modified Enzymes and Metal Electrodes. I. Electron Transfer from Glucose Oxidase to Metal Electrodes via Electron Relays, Bound Covalently to the Enzyme*," J. Phys. Chem. 91(6):1285-1289 (1987).

Degani, Y. et al., "*Direct Electrical Communication between Chemically Modified Enzymes and Metal Electrodes. 2. Methods for Bonding Electron-Transfer Relays to Glucose Oxidase and D-Amino-Acid Oxidase*," J. Am. Chem. Soc., 110(8):2615-2620 (1988).

Degani, Y. et al., "*Electrical Communication between Redox Centers of Glucose Oxidase and Electrodes via Electrostatically and Covalently Bound Redox Polymers*," J. Am. Chem. Soc., 111:2357-2358 (1989).

Denisevich, P. et al., "*Unidirectional Current Flow and Charge State Trapping at Redox Polymer Interfaces on Bilayer Electrodes: Principles, Experimental Demonstration, and Theory*," J. Am. Chem. Soc., 103(16):4727-4737 (1981).

Dicks, J. M., "*Ferrocene modified Polypyrrole with immobilised glucose oxidase and its application in amperometric glucose microbiosensors*," Ann. Biol. clin., 47:607-619 (1989).

Ellis, C. D., "*Selectivity and Directed Charge Transfer through an Electroactive Metallopolymer Film*," J. Am. Chem. Soc., 103(25):7480-7483 (1981).

Engstrom, R.C. et al., "*Characterization of Electrochemically Pretreated Glassy Carbon Electrodes*", Anal. Chem., 56(2):136-141 (Feb. 1984).

Engstrom, R.C., "*Electrochemical Pretreatment of Glassy Carbon Electrodes*", Anal. Chem., 54 (13):2315-2314 (Nov. 1982).

Feldman, B.J. et al., "*Electron Transfer Kinetics at Redox Polymer/Solution Interfaces Using Microelectrodes and Twin Electrode Thin Layer Cells*", J. Electroanal. Chem., 194(1):63-81 (Oct. 10, 1985).

Fischer, H. et al., "*Intramolecular Electron Transfer Mediated by 4,4'-Bipyridine and Related Bridging Groups*", J. Am. Chem. Soc., 98(18):5512-5517 (Sep. 1, 1976).

Foulds, N.C. et al., "*Enzyme Entrapment in Electrically Conducting Polymers*," J. Chem. Soc., Faraday Trans 1., 82:1259-1264 (1986).

Foulds, N.C. et al., "*Immobilization of Glucose Oxidase in Ferrocene-Modified Pyrrole Polymers*," Anal. Chem., 60(22):2473-2478 (Nov. 15, 1988).

Frew, J.E. et al., "*Electron-Transfer Biosensors*", Phil. Trans. R Soc. Lond., B316:95-106 (1987).

Gorton, L. et al., "*Selective detection in flow analysis based on the combination of immobilized enzymes and chemically modified electrodes*," Analytica Chimica Acta., 250:203-248 (1991).

Gregg, B. A. et al., "*Cross-Linked Redox Gels Containing Glucose Oxidase for Amperometric Biosensor Applications*," Analytical Chemistry, 62(3):258-263 (Feb. 1, 1990).

Gregg, B. A. et al., "*Redox Polymer Films Containing Enzymes. J. A. Redox-Conducting Epoxy Cement: Synthesis, Characterization, and Electrocatalytic Oxidation of Hydroquinone*", J. Phys. chem., 95 (15):5970-5975 (1991).

Hale, P.D. et al., "*A New Class of Amperometric Biosensor Incorporating a Polymeric Electron-Transfer Mediator*," J. Am. Chem. Soc., 111(9):3482-3484 (1989).

Harrison, D.J. et al., "*Characterization of Perfluorosulfonic Acid Polymer Coated Enzyme Electrodes and a Miniaturized Integrated Potentiostat for Glucose Analysis in Whole Blood*", Anal. Chem., 60 (19):2002-2007 (Oct. 1, 1988).

Hawkridge, F. M. et al., "*Indirect Coulometric Titration of Biological Electron Transport Components*," Analytical Chemistry, 45(7):1021-1027 (Jun. 1973).

Heller, A., "*Amperometric biosensors based on three-dimensional hydrogel-forming epoxy networks*," Sensors and Actuators B, 13-14:180-183 (1993).

Heller, A., "*Electrical Connection of Enzyme Redox Centers to Electrodes*," J. Phys. Chem., 96 (9):3579-3587 (1992).

Heller, A., "*Electrical Wiring of Redox Enzymes*," Acc. Chem. Res., 23(5):129-134 (1990).

Ianniello, R.M. et al. "*Immobilized Enzyme Chemically Modified Electrode as an Amperometric Sensor*", Anal. Chem., 53(13):2090-2095 (Nov. 1981).

Ianniello, R.M. et al., "*Differential Pulse Voltammetric Study of Direct Electron Transfer in Glucose Oxidase Chemically Modified Graphite Electrodes*", Anal. Chem., 54(7):1098-1101 (Jun. 1981).

Ikeda, T. et al., "*Glucose oxidase-immobilized benzoquinone-carbon paste electrode as a glucose sensor*," Agric. Biol. Chem., 49(2) (1 page—Abstract only) (1985).

Ikeda, T. et al., "*Kinetics of Outer-Sphere Electron Transfers Between Metal Complexes in Solutions and Polymeric Films on Modified Electrodes*", J. Am. Chem. Soc., 103(25):7422-7425 (Dec. 16, 1981).

Johnson, K. W., "*Reproducible Electrodeposition of Biomolecules for the Fabrication of Miniature Electroenzymatic Biosensors*", Sensors and Actuators B Chemical, B5:85-89 (1991).

Johnson, K. W., "*Reproducible Electrodeposition of Biomolecules for the Fabrication of Miniatyure Electroenzymatic Biosensors*", Sensors and Actuators B Chemical, B5:85-89 (1991).

Jonsson, G. et al., "*An Amperometric Glucose Sensor Made by Modification of a Graphite Electrode Surface With Immobilized Glucose Oxidase and Adsorbed Mediator*", Biosensors, 1:355-368 (1985).

Josowicz, M. et al., "*Electrochemical Pretreatment of Thin Film Platinum Electrodes*", J. Electrochem. Soc., 135(1):112-115 (Jan. 1988).

Katakis, I. et al., "*Electrostatic Control of the Electron Transfer Enabling Binding of Recombinant Glucose Oxidase and Redox Polyelectrolytes*," J. Am. Chem. Soc., 116(8):3617-3618 (1994).

Katakis, I. et al., "*L-alpha.-Glycerophosphate and L-Lactate Electrodes Based on the Electrochemical*"Wiring" *of Oxidases*," Analytical Chemistry, 64(9):1008-1013 (May 1, 1992).

Kenausis, G. et al., "*Wiring of glucose oxidase and loctate oxidase within a hydrogel made with poly(vinyl pyridine) complexed with [Os(4,4'-dimethaxy-2,2'-bipyridine).sub.2 Cl].sup.+/2+*," J. Chem. Soc., Faraday Trans., 90(20):4131-4136 (1996).

Koudelka, M. et al., "*In-Vivo Behaviour of Hypodermically Implanted Microfabricated Glucose Sensors*", Biosensors & Bioelectronics, 6(1):31-36 (1991).

Kulys, J. et al., "*Mediatorless peroxidase electrode and preparation of bienzyme sensors*," Bioelectrochemisty and Bioenergetics, 24:305-311 (1990).

Lager, W. et al., "*Implantable Electrocatalytic Glucose Sensor*," Horm. Metab. Res., 26:526-530 (Nov. 1994).

Lindner, E. et al. "*Flexible (Kapton-Based) Microsensor Arrays of High Stability for Cardiovascular Applications*", J. Chem. Soc. Faraday Trans., 89(2):361-367 (Jan. 21, 1993).

Maidan, R. et al., "*Elimination of Electroaxidizable Interferant-Produced Currents in Amperometric Biosensors*," Analytical Chemistry, 64(23):2889-2896 (Dec. 1, 1992).

Mastrototaro, J.J. et al., "*An Electroenzymatic Glucose Sensor Fabricated on a Flexible Substrate*", Sensors and Biosensors B Chemical, B5:139-144 (1991).

McKean, B. et al. "*A Telemetry-Instrumentation System for Chronically Implanted Glucose and Oxygen Sensors*," IEEE Transactions on Biomedical Engineering, vol. 35, No. 7, (Jul. 1988), pp. 526-532.

McNeil, C. J. et al., "*Thermostable Reduced Nicotinomide Adenine Dinucleotide Oxidase: Application to Amperometric Enzyme Assay*," Anal. Chem., 61(1):25-29 (Jan. 1, 1989).

Miyawaki, O. et al., "*Electrochemical and Glucose Oxidase Coenzyme Activity of Flavin Adenine Dinucleotide Covalently Attached to Glassy Carbon at the Adenine Amino Group*", Biochimica et Biophysica Acta. 838:60-68 (1985).

Moatti-Sirat, D. et al., "*Evaluating in vitro and in vivo the inteference of ascorbate and acetaminophen on glucose detection by a needle-type glucose sensor*," Biosensors & Bioelectronics, 7(5):345-352 (1992).

Moatti-Sirat, D. et al., "*Reduction of Acetaminophen interference in glucose sensors by a composite Nafion Membrane: demonstration in rats and man*," Diabetologia, 37(6) (1 page—Abstract only) (Jun. 1994).

Moatti-Sirat, D. et al., "*Towards continuous glucose monitoring: in vivo evaluation of a miniaturized glucose sensor implanted for several days in rat subcutaneous tissue*," Diabetolocia, 35(3) (1 page—Abstract only) (Mar. 1992).

Nagy, G. et al., "*A New Type of Enzyme Electrode: The Ascorbic Acid Eliminator Electrode*," Life Sciences, 31(23):2611-2616 (1982).

Nakamura, S. et al., "*Effect of Periodate Oxidation on the Structure and Properties of Glucose Oxidase*," Biochimica et Biophysica Acta., 445:294-308 (1976).

Narazimhan, K. et al., "*p-Benzoquinone activation of metal oxide electrodes for attachment of enzymes*," Enzyme Microb. Technol., 7(6) (1 page—Abstract only) (1985).

Ohara, T. J. et al., ""*Wired" Enzyme Electrodes for Amperometric Determination of Glucose or Lactate in the Presence of Interfering Substances*," Analytical Chemistry, 66(15):2451-2457 (Aug. 1, 1994).

Ohara, T. J. et al., "*Glucose Electrodes Based on Cross-Linked [Os(bpy).sub.2 Cl].sup. +/2+ Complexed Poly(I-vinylimadazole) Films*," Analytical Chemistry, 65(23):3512-3516 (Dec. 1, 1993).

Ohara, T. J., "*Osmium Bipyridyl Redox Polymers Used in Enzyme Electrodes*," Platinum Metals Rev., 39 (2):54-62 (Apr. 1995).

Olievier, C. N. et al., "*In vivo Measurement of Carbon Dioxide Tension with a Miniature Electrode*," Pflugers Arch. 373:269-272 (1978).

Paddock, R. et al., "*Electrocatalytic reduction of hydrogen peroxide via direct electron transfer from pyrolytic graphite electrodes to irreversibly absorbed cytochrome c peroxidase*," J. Electroanal. Chem., 260:487-494 (1989).

Palleschi, G. et al., "*A Study of Interference in Glucose Measurements in Blood by Hydrogen Peroxide Based Glucose Probes*", Anal. Biochem., 159:114-121 (1986).

Pankratov, I. et al., "*Sol-gel derived renewable-surface biosensors*," Journal of Electroanalytical Chemistry, 393:35-41 (1995).

Pathak, C. P. et al., "*Rapid Photopolymerization of Immunoprotective Gels in Contact with Cells and Tissue*," J. Am. Chem. Soc., 114(21):8311-8312 (1992).

Pickup, J. C. et al., "*In vivo molecular sensing in diabetes mellitus: an implantable glucose sensor with direct electron transfer*," Diabetologia, 32(3):213-217 (1989).

Pickup, J. et al., "*Potentially-implantable, amperometric glucose sensors with mediated electron transfer: improving the operating stability*," Biosensors, 4(2) (1 page—Abstract only) (1989).

Pickup, J., *"Developing glucose sensors for in vivo use*," Tibtech, 11:285-289 (Jul. 1993).

Pishko, M. V. et al., "*Amperometric Glucose Microelectrodes Prepared Through Immobilization of Glucose Oxidase in Redox Hydrogels",* Anal. Chem., 63(20):2268-2272 (Oct. 15, 1991).

Poitout, V. et al., "*A glucose monitoring system for on line estimation in man of blood glucose concentration using a miniaturized glucose sensor implanted in the subcutaneous tissue and a wearable control unit*," Diabetologia, 36(7) (1 page—Abstract only) (Jul. 1993).

Poitout, V. et al., "*Calibration in dogs of a subcutaneous miniaturized glucose sensor using a glucose meter for blood glucose determination*," Biosensors & Bioelectronics, 7:587-592 (1992).

Poitout , V. et al., "*In vitro and in vivo evaluation in dogs of a miniaturized glucose sensor*," ASAIO Transactions, 37(3) (1 page—Abstract only) (Jul.-Sep. 1991).

Pollak, A. et al., "*Enzyme Immobilization by Condensation Copolymerization into Cross-Linked Polyacrylamide Gels*," J. Am. Chem. Soc., 102(20):6324-6336 (1980).

Reach, G. et al., "*Can Continuous Glucose Monitoring Be Used for the Treatment of Diabetes*?" Analytical Chemistry, 64(6):381-386 (Mar. 15, 1992).

Rebrin, K. et al., "*Automated Feedback Control of Subcutaneous Glucose Concentration in Diabetic Dogs",* Diabetologia, 32(8):573-576 (Aug. 1989).

Sakakida, M. et al., "*Ferrocene-mediate needle-type glucose sensor covered with newly designed biocompatible membrane*," Sensors and Actuators B, 13-14:319-322 (1993).

Samuels, G. J. et al., "*An Electrode-Supported Oxidation Catalyst Based on Ruthenium (IV). pH* "Encapsulation" *in a Polymer Film,*" J. Am. Chem. Soc., 103(2):307-312 (1981).

Sasso, S. V. et al., "*Electropolymerized 1,2-Diaminobenzene as a Means to Prevent Interferences and Fouling and to Stabilize Immobilized Enzyme in Electrochemical Biosensors*" , Anal. Chem., 62 (11):1111-1117 (Jun. 1, 1990).

Scheller, F. et al., "*Enzyme electrodes and their application*," Phil. Trans. R. Soc. Lond., B 316:85-94 (1987).

Schmehl, R.H. et al., "*The Effect of Redox Site Concentration on the Rate of Mediated Oxidation of Solution Substrates by a Redox Copolymer Film",* J. Electroanal. Chem., 152:97-109 (Aug. 25, 1983).

Shichiri, M. et al., "*Glycaemic Control in Pancrearetomized Dogs with a Wearable Artificial Endocrine Pancreas",* Diabetologia, 24(3):179-184 (Mar. 1983).

Shichiri, M. et al., "*Needle-type Glucose Sensor for Wearable Artificial Endocrine Pancreas*" in Ko et al. (eds.) "*Implantable Sensors for Closed-Loop Prosthetic Systems*" Futura Pub. Co., Inc., 1985) Chapter 15, pp. 197-210.

Shichiri, M. et al., "*Telemetry Glucose Monitoring Device with Needle-type Glucose Sensor: A Useful Tool for Blood Glucose Monitoring in Diabetic Individuals*," Diabetes Care, vol. 9, No. 3 (May-Jun. 1986), pp. 298-301.

Shults, M. "*A Telemetry-Instrumentation System for Monitoring Multiple Subcutaneously Implanted Glucose Sensors*," IEEE Transactions on Biomedical Engineering, vol. 41, No. 10 (Oct. 1994), pp. 937-942.

Sittampalam, G. et al., *"Surface-Modified Electrochemical Detector for Liquid Chromatography",* Anal. Chem., 55(9):1608-1610 (Aug. 1983).

Sprules, S. D. et al., "*Evaluation of a New Disposable Screen-Printed Sensor Strip for the Measurement of NADH and Its Modification to Produce a Lactate Biosensor Employing Microliter Volumes*," Electroanalysis, 8(6):539-543 (1996).

Sternberg, F. et al., "*Calibration Problems of Subcutaneous Glucosensors when Applied* "In-Situ" *in Man*," Horm. metabl. Res. 26:524-525 (1994).

Sternberg, R. et al., "*Covalent Enzyme Coupling on Cellulos Acetate Membranes for Glucose Sensor Development*," Analytical Chemistry, 60(24):2781-2786 (Dec. 15, 1998).

Sternberg, R. et al., "*Study and Development of Multilayer Needle-type Enzyme-based Glucose Microsensors*," Biosensors, 4:27-40 (1988).

Suekane, M., "*Immobilization of glucose isomerase*," Zeitschrift fur Allgemeine Mikrobiologie, 22 (8):565-576 (1982).

Tajima, S. et al., "*Simultaneous Determination of Glucose and 1,5-Anydroglucitol",* Chemical Abstracts, 111(25):394 111:228556g (Dec. 18, 1989).

Tarasevich, M.R. "*Bioelectrocatalysis",* Comprehensive Treatise of Electrochemistry, 10 (Ch. 4):231-295 (1985).

Tatsuma, T. et al., "*Enzyme Monolayer- and Bilayer-Modified Tin Oxide Electrodes for the Determination of Hydrogen Peroxide and Glucose*," Anal. Chem., 61(21):2352-2355 (Nov. 1, 1989).

Taylor, C. et al., "*Wiring of glucose oxidase within a hydrogel made with polyvinyl imidozole complexed with [(OS-4,4'-dimethoxy-2,2'-bipyridine)Cl] .sup.+/2+*," Journal of Electroanalytical Chemistry, 396:511-515 (1995).

Trojanowicz, M. et al., "*Enzyme Entrapped Polypyrrole Modified Electrode for Flow-Injection Determination of Glucose*," Biosensors & Bioelectronics, 5:149-156 (1990).

Turner, A.P.F. et al., "*Diabetes Mellitus: Biosensors for Research and Management*", Biosensors, 1:85-115 (1985).

Turner, R.F.B. et al., "*A Biocompatible Enzyme Electrode for Continuous in vivo Glucose Monitoring in Whole Blood*," Sensors and Actuators, B1(1-6):561-564 (Jan. 1990).

Tuzhi, P. et al., "*Constant Potential Pretreatment of Carbon Fiber Electrodes for In Vivo Electrochemistry*", Analytical Letters, 24(6):935-945 (1991).

Umana, M., "*Protein-Modified Electrochemically Active Biomaterial Surface*," U.S. Army Research Office Report, (12 pages) (Dec. 1988).

Updike, S. et al., "*Principles of Long-term Fully Implanted Sensors with Emphasis on Radiotelemetric Monitoring of Blood Glucase from Inside a Subcataneous Foreign Body Capsule (FBC)" in "Biosensors in the Body: Continuous in vivo Monitoring*" (John Wiley & Sons, Ltd., 1997) Chapter 4, pp. 117-137.

Urban, G. et al., "*Miniaturized Thin-Film Biosensors Using Covalently Immobilized Glucose Oxidase*", Biosensors & Bioelectronics, 6(7):555-562 (1991).

Velho, G. et al., "*In Vitro and In Vivo Stability of Electrode Potentials in Needle-Type Glucose Sensors*", Diabetes, 38(2):164-171 (Feb. 1989).

Velho, G. et al., "*Strategies for colibrating a subcutaneous glucose sensor*," Biomed. Biochim. Acta, 48 (11/12):957-964 (1989).

Von Woedtke, T. et al., "*In Situ Calibration of Implanted Electrochemical Glucose Sensors*," Biomed. Biochim. Acta, 48(11/12):943-952 (1989).
Vrecke, M. S. et al., "*Chapter 15: Hydrogen Peroxide Electrodes Based on Electrical Connection of Redox Centers of Various Peroxidases to Electrodes through a Three-Dimensional Electron-Relaying Polymer Network*," Diagnostic Biosensor Polymers, 7 pgs. (Jul. 26, 1993).
Wang, D. L. et al., "*Miniaturized Flexible Amperometric Lactate Probe*," Analytical Chemistry, 65 (8):1069-1073 (Apr. 15, 1993).
Wang, J. et al., "*Activation of Glassy Carbon Electrodes by Alternating Current Electrochemical Treatment*", Analytica Chimica Acta, 167:325-334 (Jan. 1985).
Wang, J. et al., "*Amperometric biosensing of organic peroxides with peroxidase-modified electrodes*" Analytica Chimica Acta. 254:81-88 (1991).
Wang, J. et al., "*Screen-Printable Sol-Gel Enzyme-Containing Carbon Inks*," Analytical Chemistry, 68 (15):2705-2708 (Aug. 1, 1996).
Wang, J. et al., "*Sol-Gel-Derived Metal-Dispersed Carbon composite Amperometric Biosensors*," Electroanalysis, 9(1):52-55 (1997).
Williams, D.L. et al., "*Electrochemical-Enzymatic Analysis of Blood Glucose and Lactate*", Anal. Chem., 42(1):118-121 (Jan. 1970).
Wilson, G. S. et al., "*Progress toward the Development of an Implantable Sensor for Glucose*," Clinical Chemistry, 38(9):1613-1617 (1992).
Yang, L. et al., "*Determination of Oxidase Enzyme Substrates Using Cross-Flow Thin-Layer Amperometry*," Electroanalysis, 8(8-9):716-721 (1996).
Yao, S.J. et al., "*The Interference of Ascorbate and Urea in Low-Potential Electrochemical Glucose Sensing*", Proceedings of the Twelfth Annual International Conference of the IEEE Engineering in Medicine and Biology Society, 12(2):487-489 (Nov. 1-4, 1990).
Yao, T. et al., "*A Chemically-Modified Enzyme Membrane Electrode As An Amperometric Glucose Sensor*," Analytica Chimica Acta., 148:27-33 (1983).
Ye, L. et al., "*High Current Density "Wired" Quinoprotein Glucose Dehydrogenase Electroade*," Anal. Chem., 65(3):238-241 (Feb. 1, 1993).
Yildiz, A. et al., "*Evaluation of an Improved Thin-Layer Electrode*," Analytical Chemistry, 40 (70):1018-1024 (Jun. 1968).
Zamzow, K. et al., New Wearable Continuous Blood Glucose Monitor (BGM) and Artificial Pancreas (AP), Diabetes, 39:5A(20) (May 1990).
Zhang, Y. et al., "*Application of cell culture toxicity tests to the development of implantable biosensors*," Biosensors & Bioelectronics, 6:653-661 (1991).
Zhang, Y. et al., "*Elimination of the Acetaminophen Interference in an Implantable Glucose Sensor*," Anal. Chem. 66:1183-1188 (1994).
"Request for Reexamination No. 90-118457 of U.S. Patent No. 6,990, 366."
Freedman, D., et al. Statistics: Second Edition. 1991, Chapter 5, p. 74, W.W. Norton and Company. New York, New York.
Hoel, P. Elementary Statistics: Fourth Edition. 1976, Chapter 5, pp. 113-114. John Wiley and Sons, Inc. U.S.A.
Johnson, K., et al. In vivo evaluation of an electroenzymatic glucose sensor implanted in subcutaneous tissue. Biosensors and Bioelectronics. 1992, vol. 7, pp. 709-714.
Osmonics, Poretics® Polycarbonate Membrane; Product Leaflet; Engineering Purity. (c) 2002.
Sakakida, M., et al. Development of ferrocene-mediated needle-type glucose sensor as a measure of true subcutaneous tissue glucose concentrations. Artif Organs Today. 1992, vol. 2, No. 2, pp. 145-458.
Shichiri, M., et al. Wearable artificial endocrine pancreas with needle-type glucose sensor. The Lancet. Nov. 20, 1982, vol. 2, No. 8308, pp. 1129-1131.
Shichiri, M., et al. In vivo characteristics of needle-type glucose sensor — Measurement of subcutaneous glucose concentrations in human volunteers. Horm Metab Res Suppl. 1988, vol. 20, pp. 17-20.
Soegijoko, J.L. et al. External Artificial Pancreas: A New Control Unit Using Microprocessor. Hormone and Metabolic Research Supplemental Series. 1982, vol. 12, pp. 165-169.
Vreeke, M., et al. Hydrogen peroxide and β-nicotinamide adenine dinucleotide sensing amperometric electrodes based on electrical connection of horseradish peroxidase redox centers to electrodes through a three-dimensional electron relaying polymer network. Analytical Chemistry. 1992, vol. 64, pp. 3084-3090.
Yabuki, S., et al. Electro-conductive enzyme membrane. Journal of the Chemical Society: Chemical Communications. 1989, Issue 14, pp. 945-946.
Zhu, J., et al. Fabrication and characterization of glucose sensors based on a microarray H_2O_2electrode. Biosensors and Bioelectronics. 1994, vol. 9, pp. 295-300.
Complaint Abbott Diabetes Care, Inc. v. Dexcom, Inc. U.S. District Court Delaware C.A. No. 06-514. filed Aug. 17, 2006.
Opinion of the Court, Supreme Court of the United States, No. 04-1350, KSR International co., Petitioner v. Teleflex Inc. et al., Apr. 30, 2007.
United States Court of Appeals for the Federal Cicuit, No. 06-1402, Leapfrog Enterprises, Inc., v. Fisher-Price, Inc. and Mattel, Inc., May, 9, 2007.
Request for Reexamination U.S. Appl. No. 90/008,457 of U.S. Patent No. 6,990,366. filed Jan. 23, 2007.

* cited by examiner

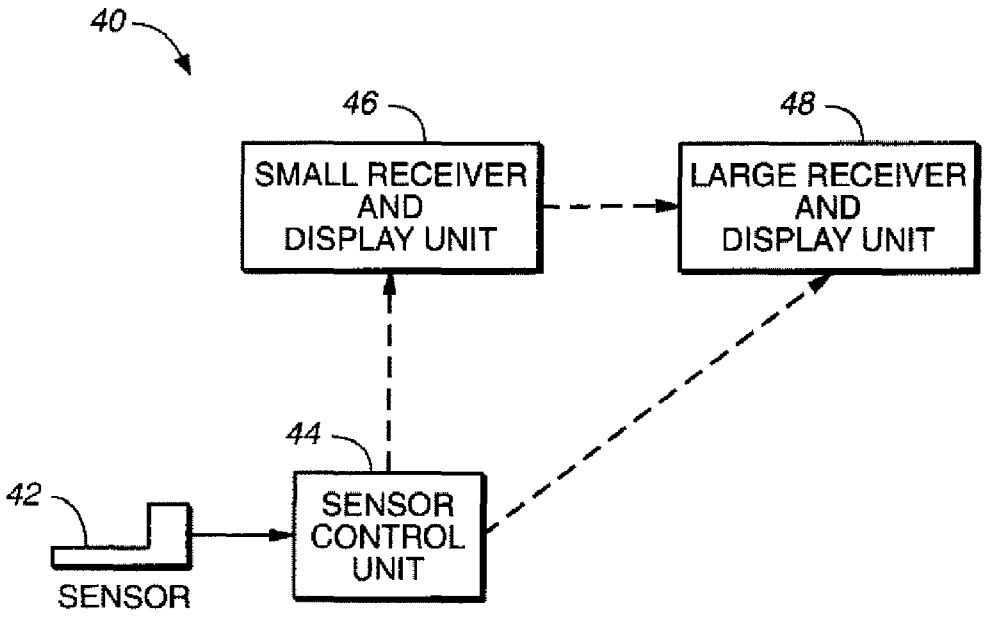
40
46
SMALL RECEIVER AND DISPLAY UNIT
48
LARGE RECEIVER AND DISPLAY UNIT
44
SENSOR CONTROL UNIT
42
SENSOR

FIG._1

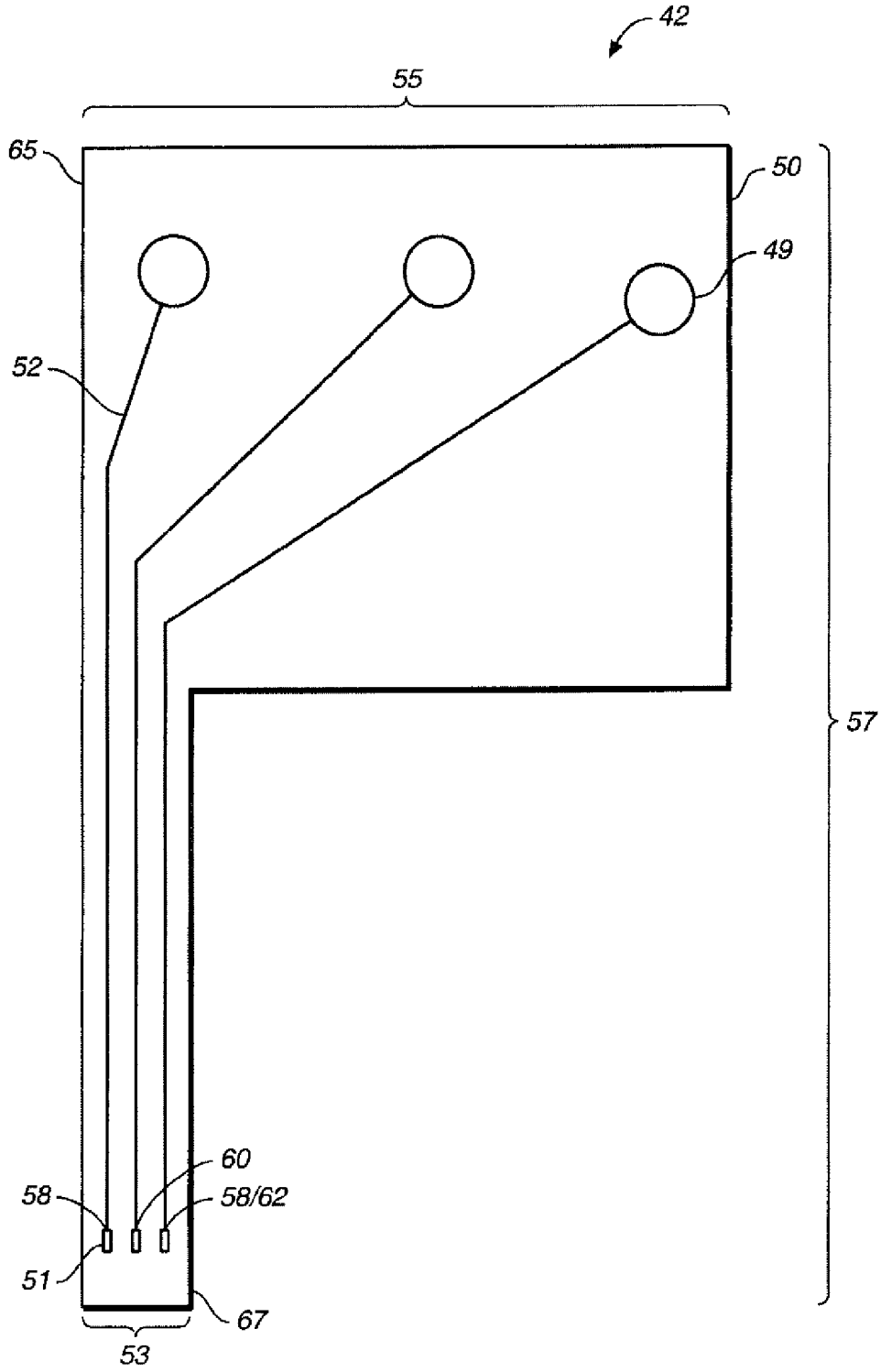

FIG._2

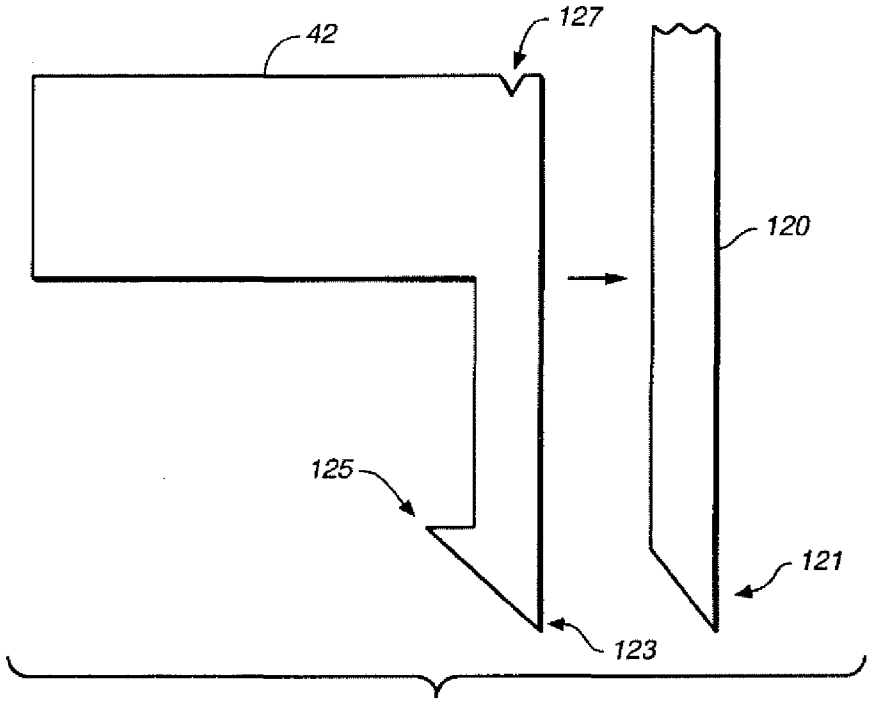

FIG._3

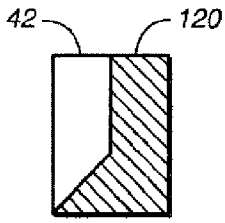

FIG._4A

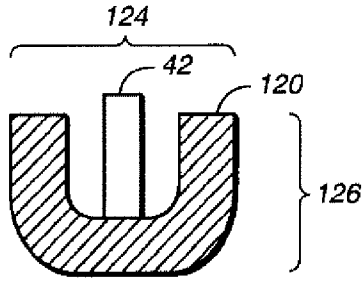

FIG._4B

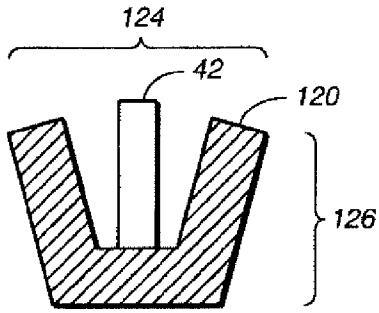

FIG._4C

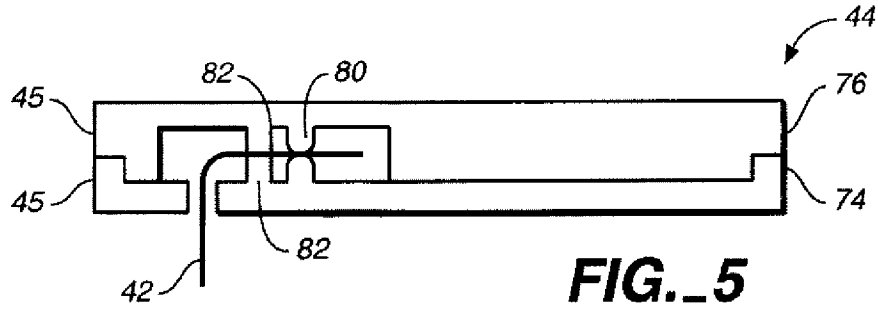

FIG._5

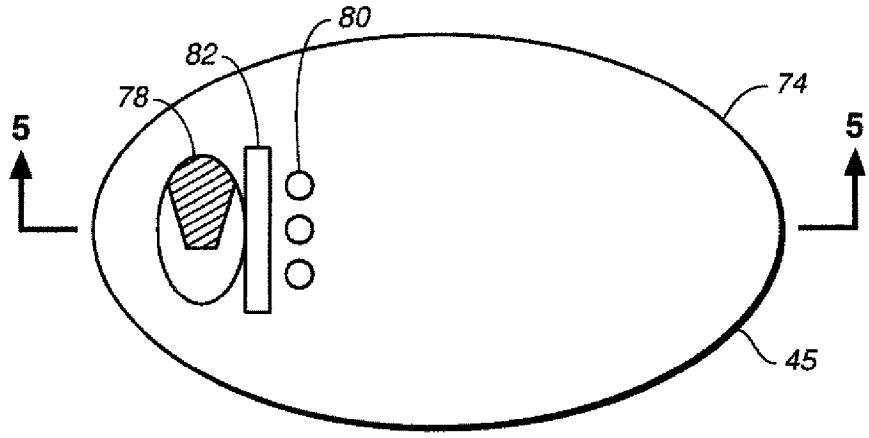

FIG._6

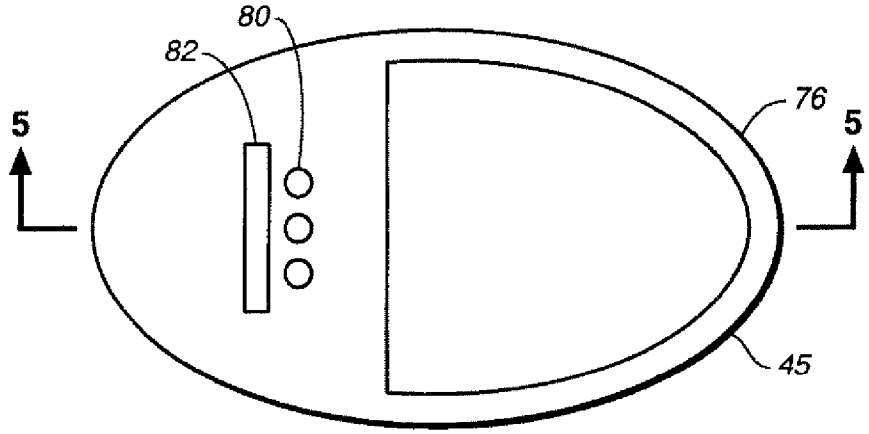

FIG._7

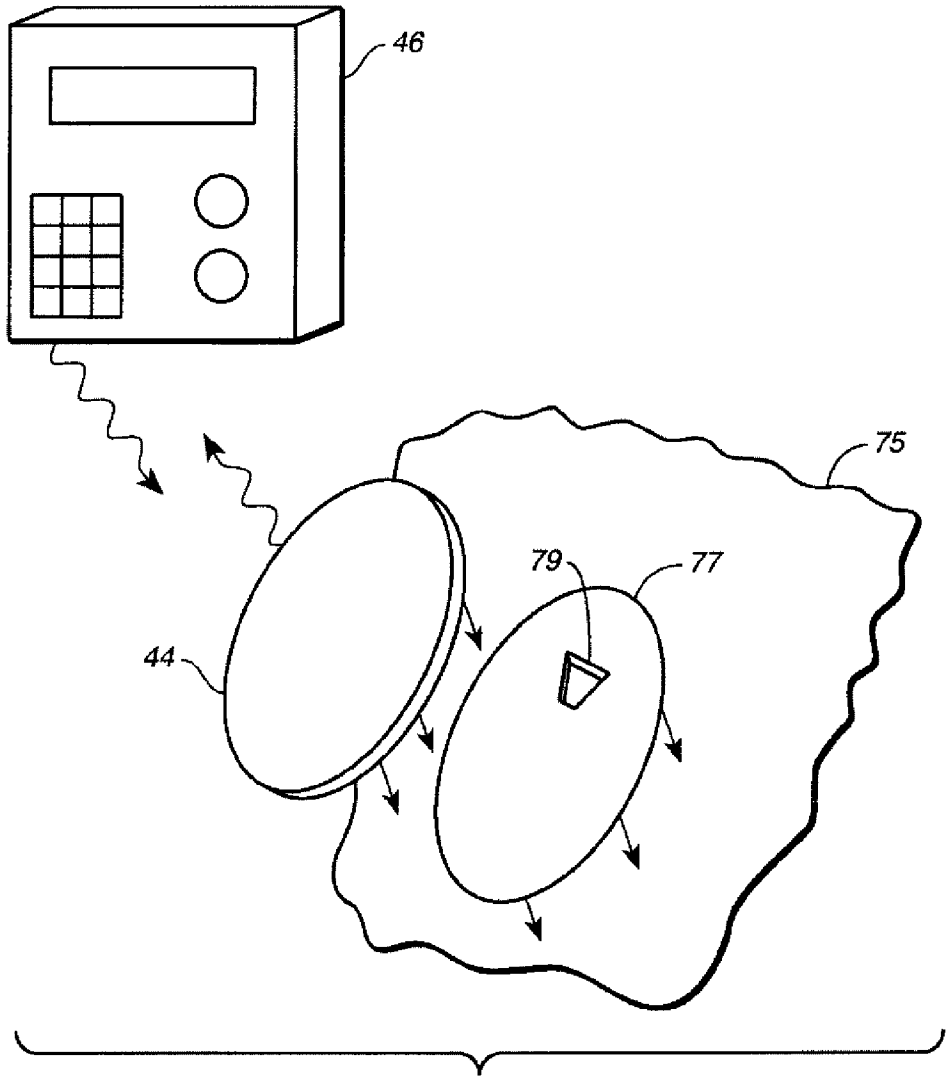

FIG._8

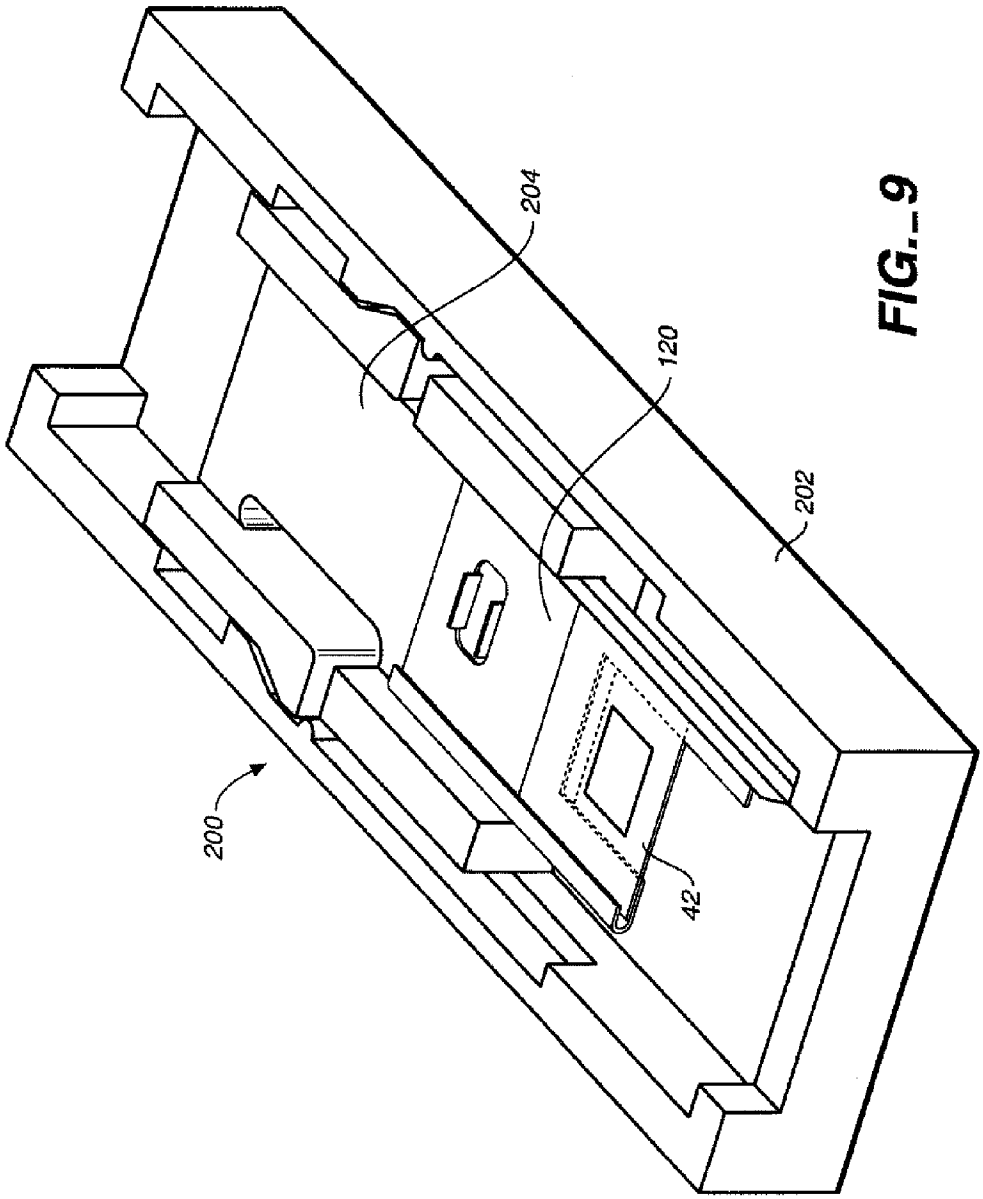

FIG._9

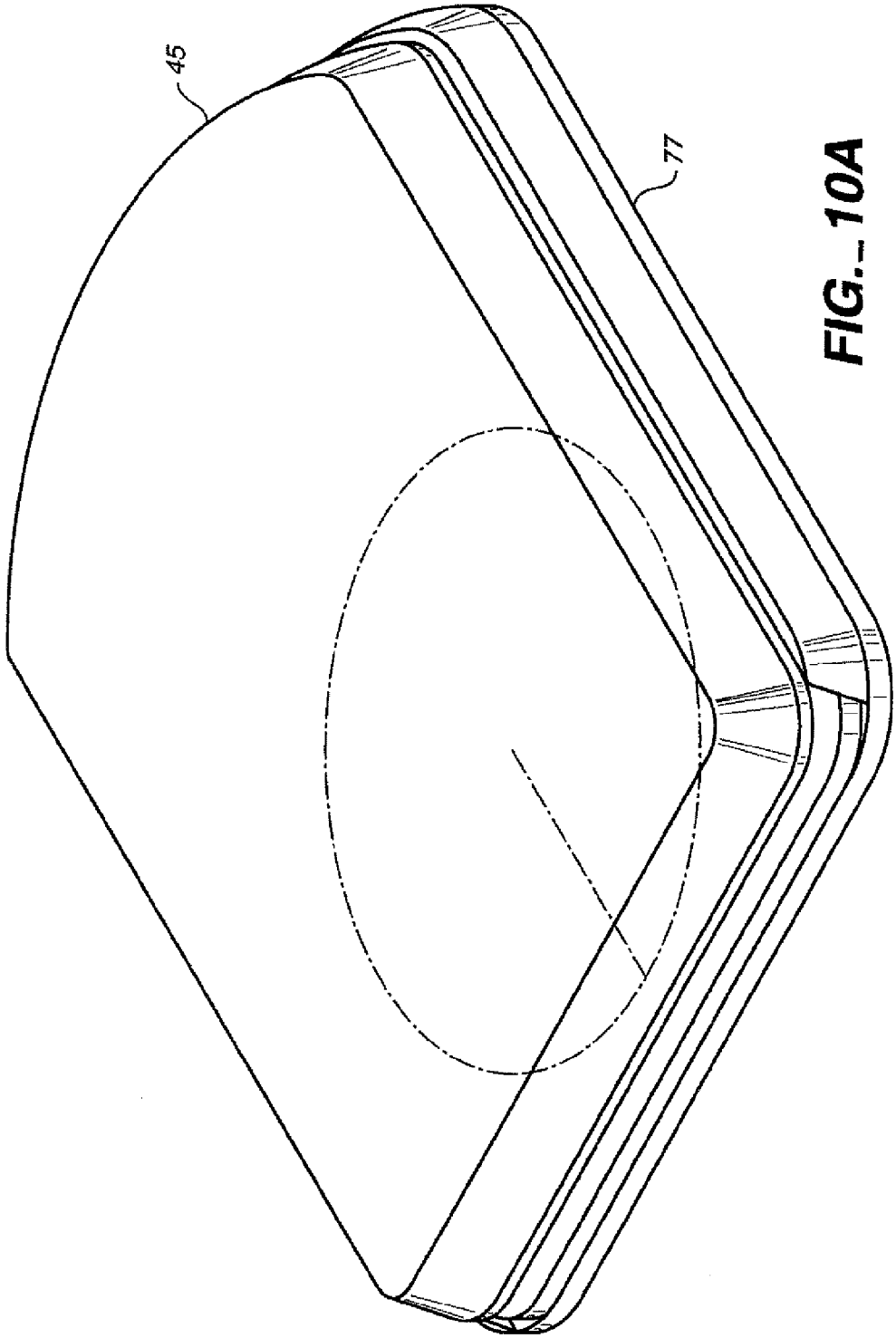

FIG._10A

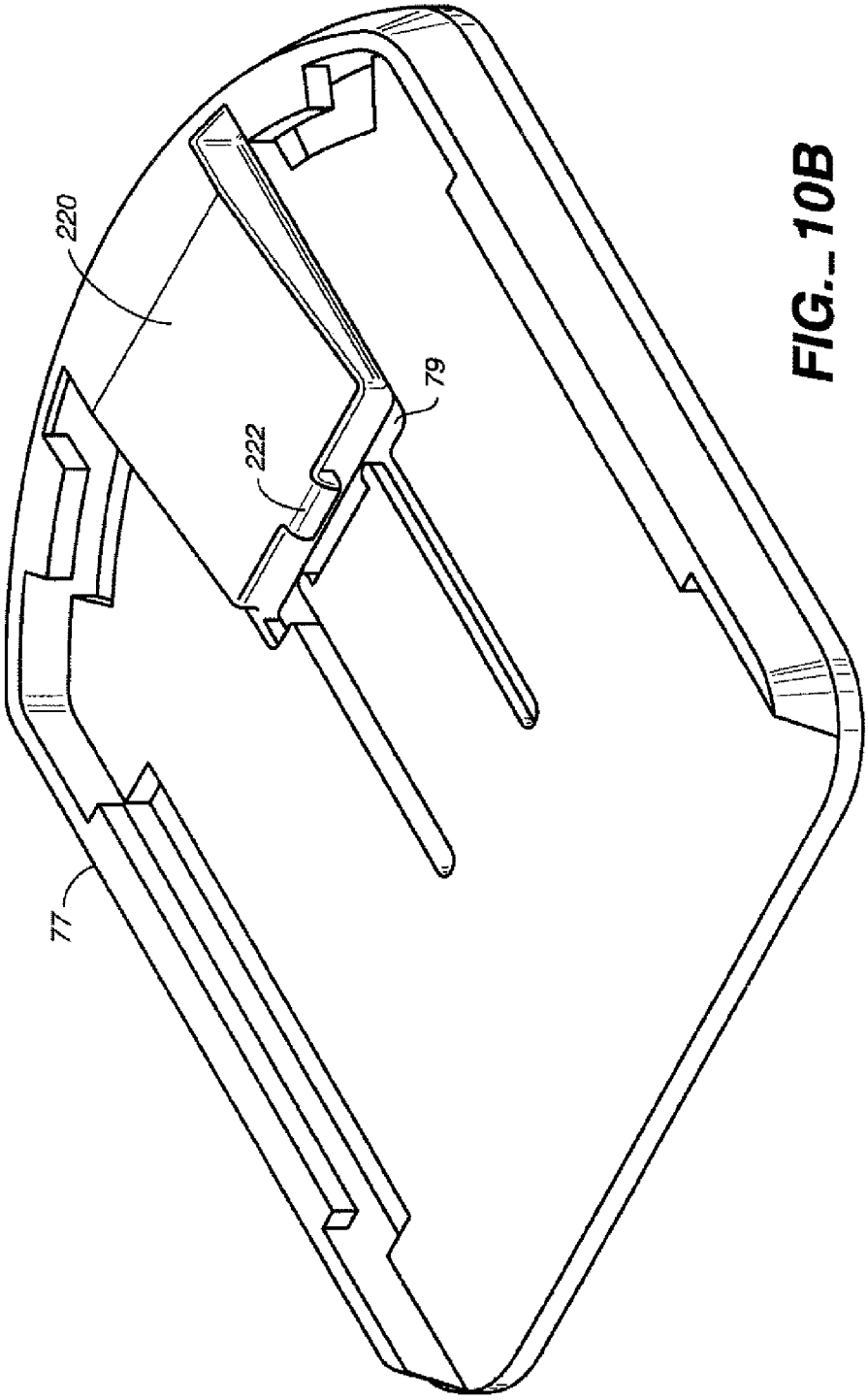

FIG._10B

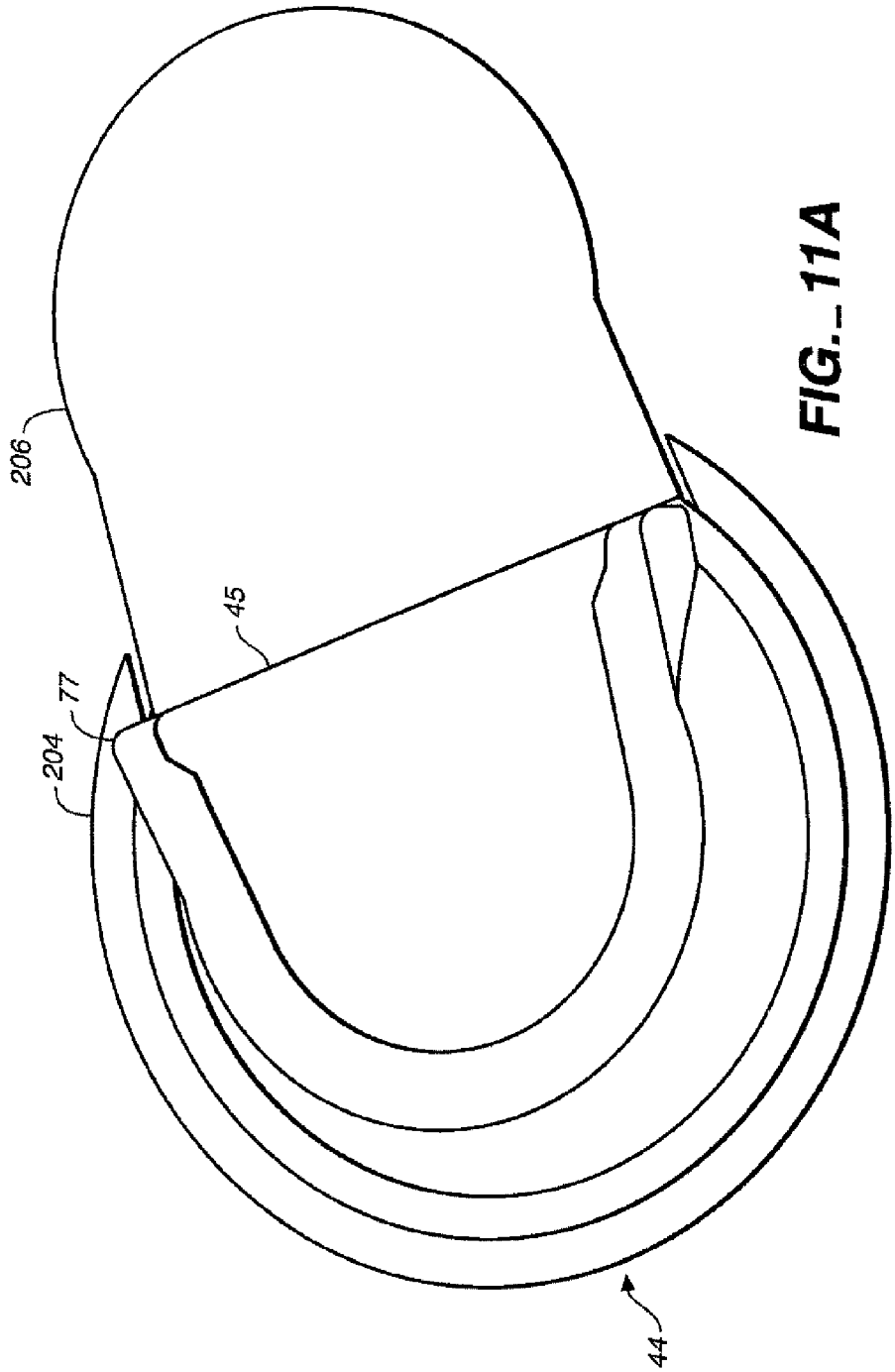

FIG._11A

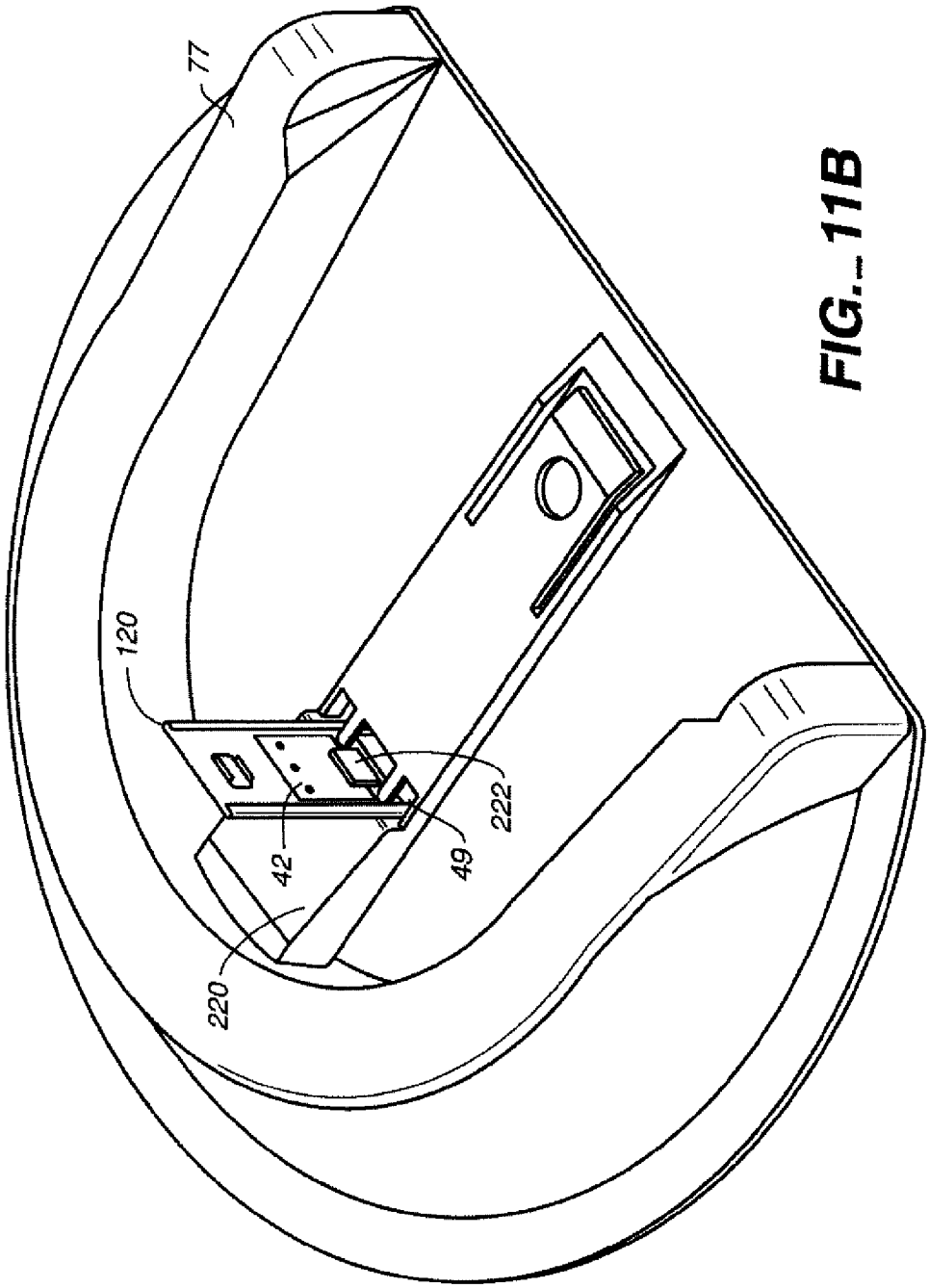

FIG. 11B

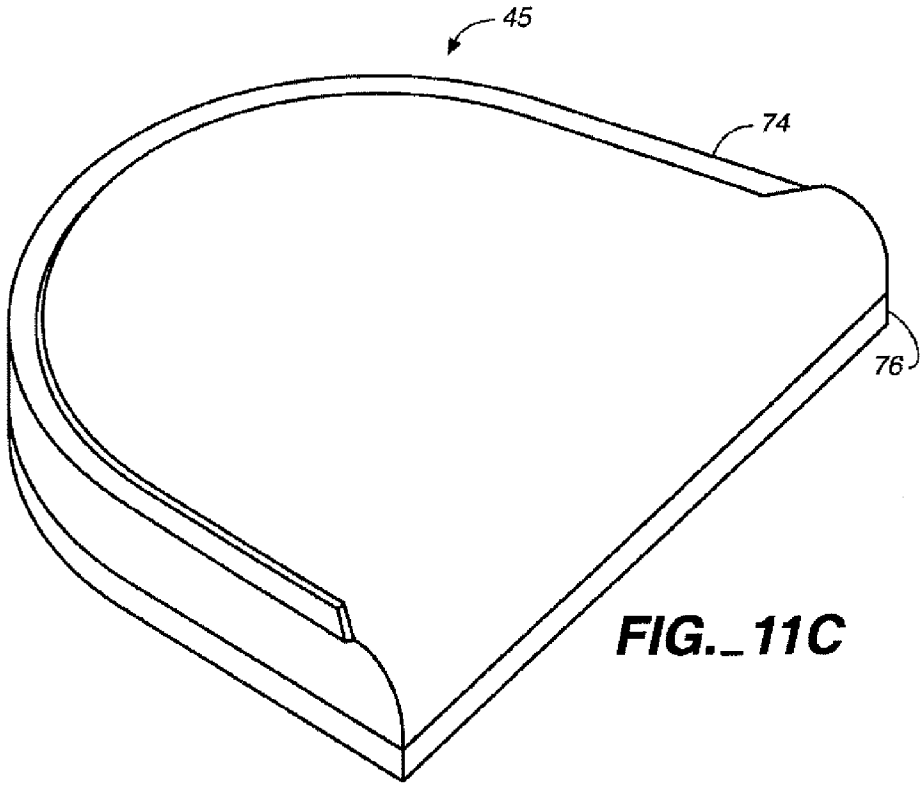

FIG._11C

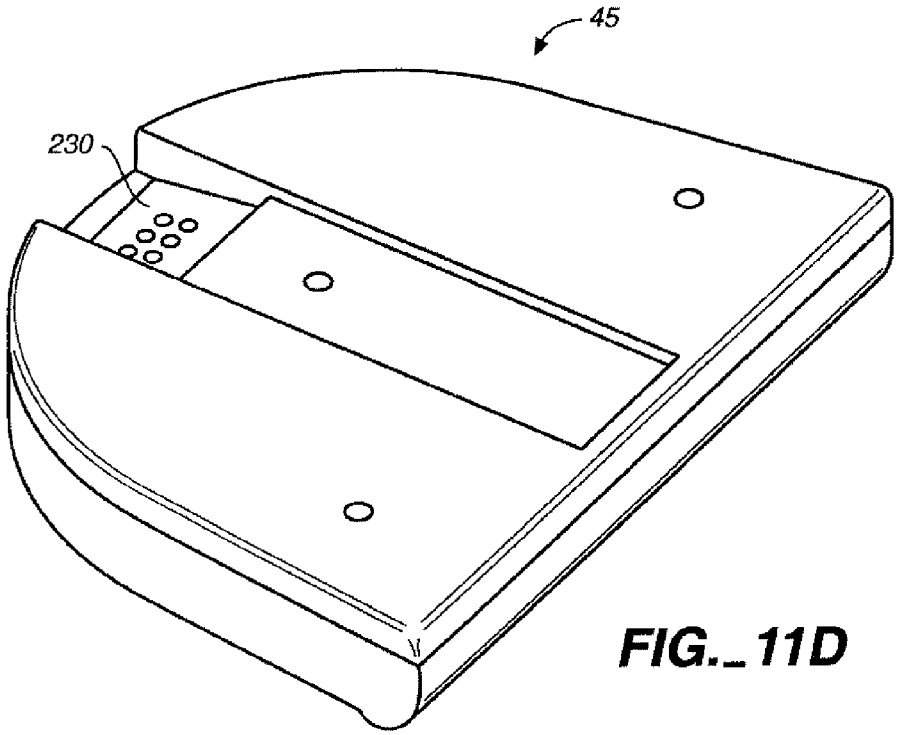

FIG._11D

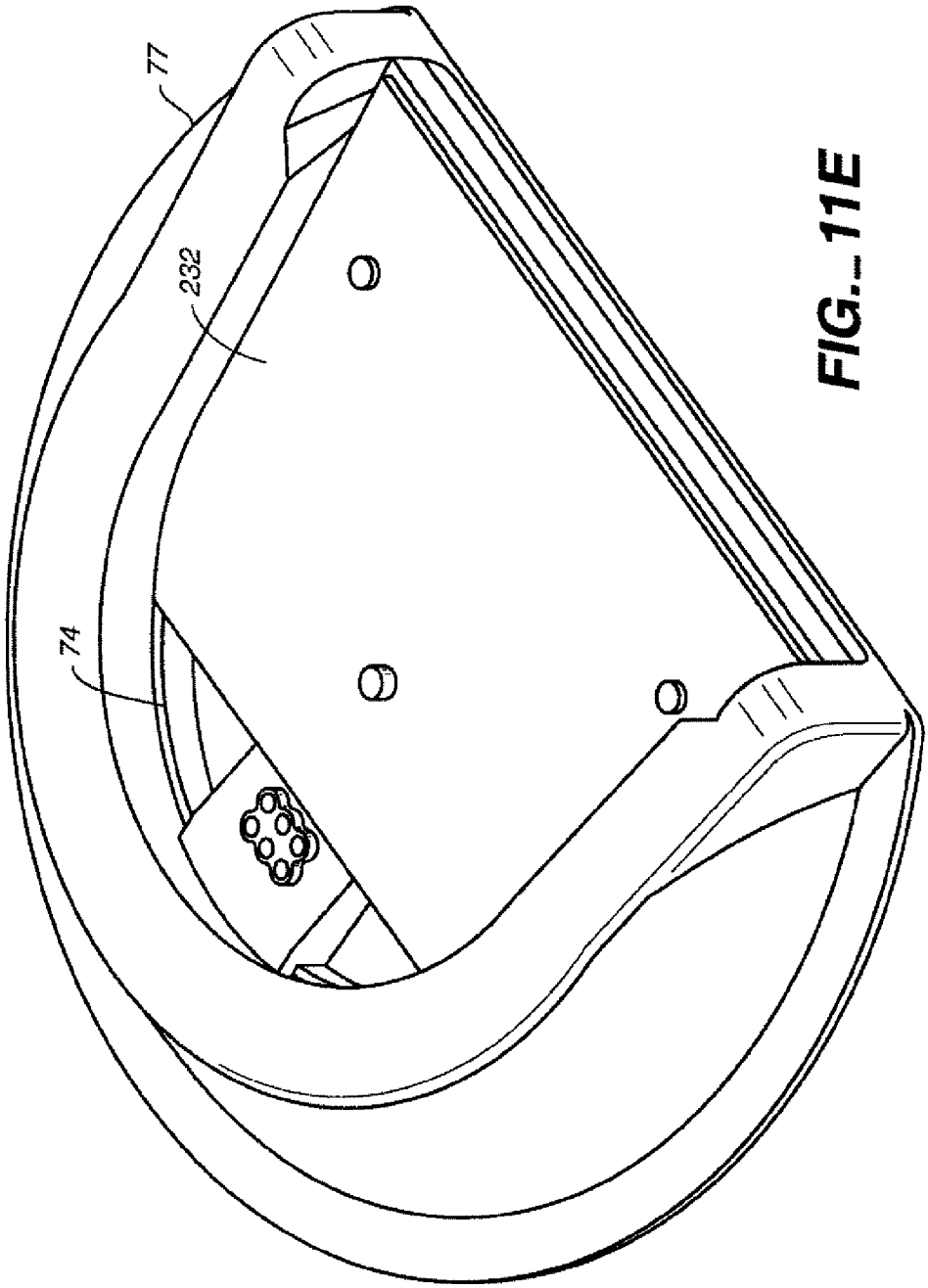

FIG._11E

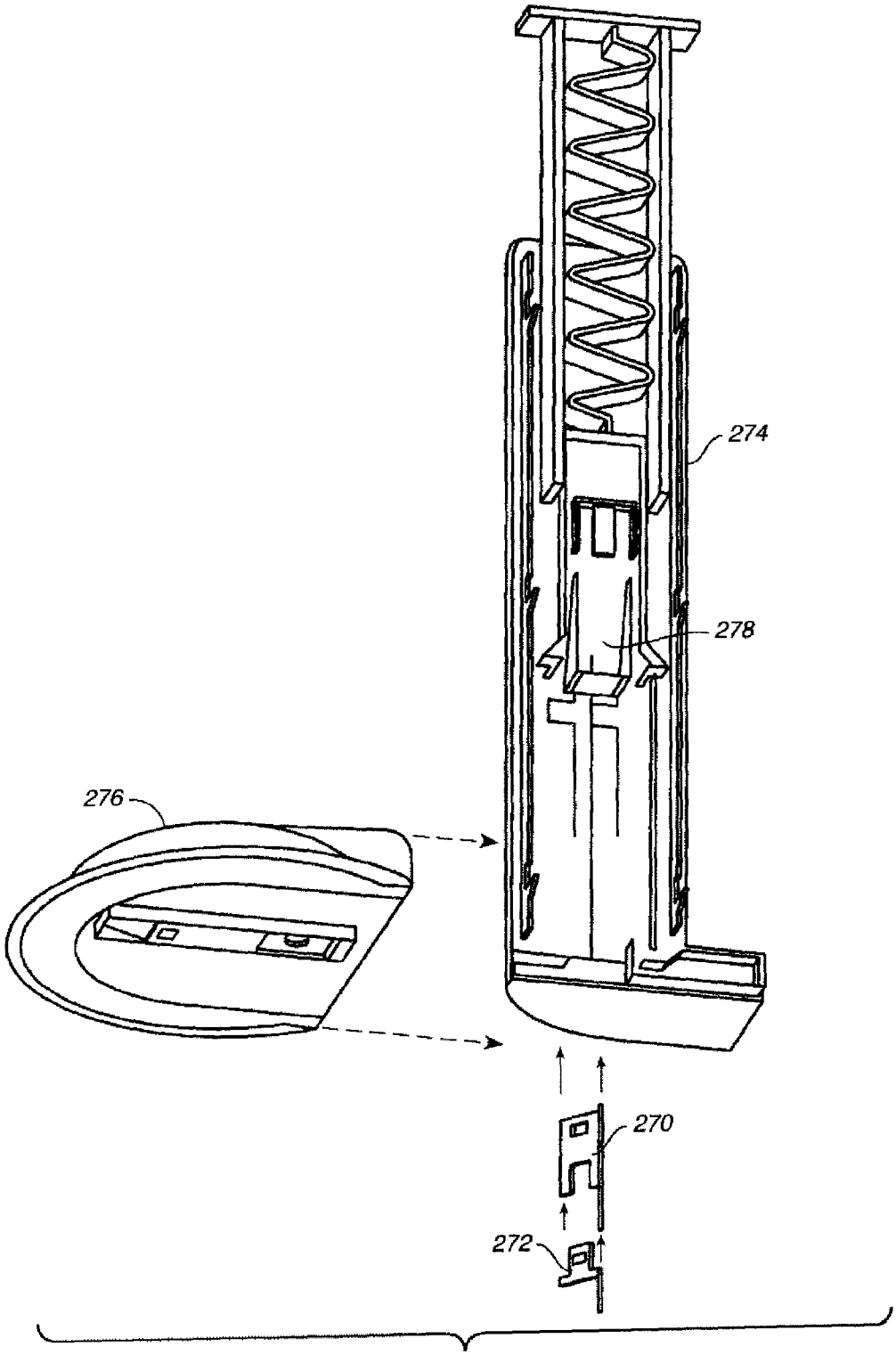

FIG._12

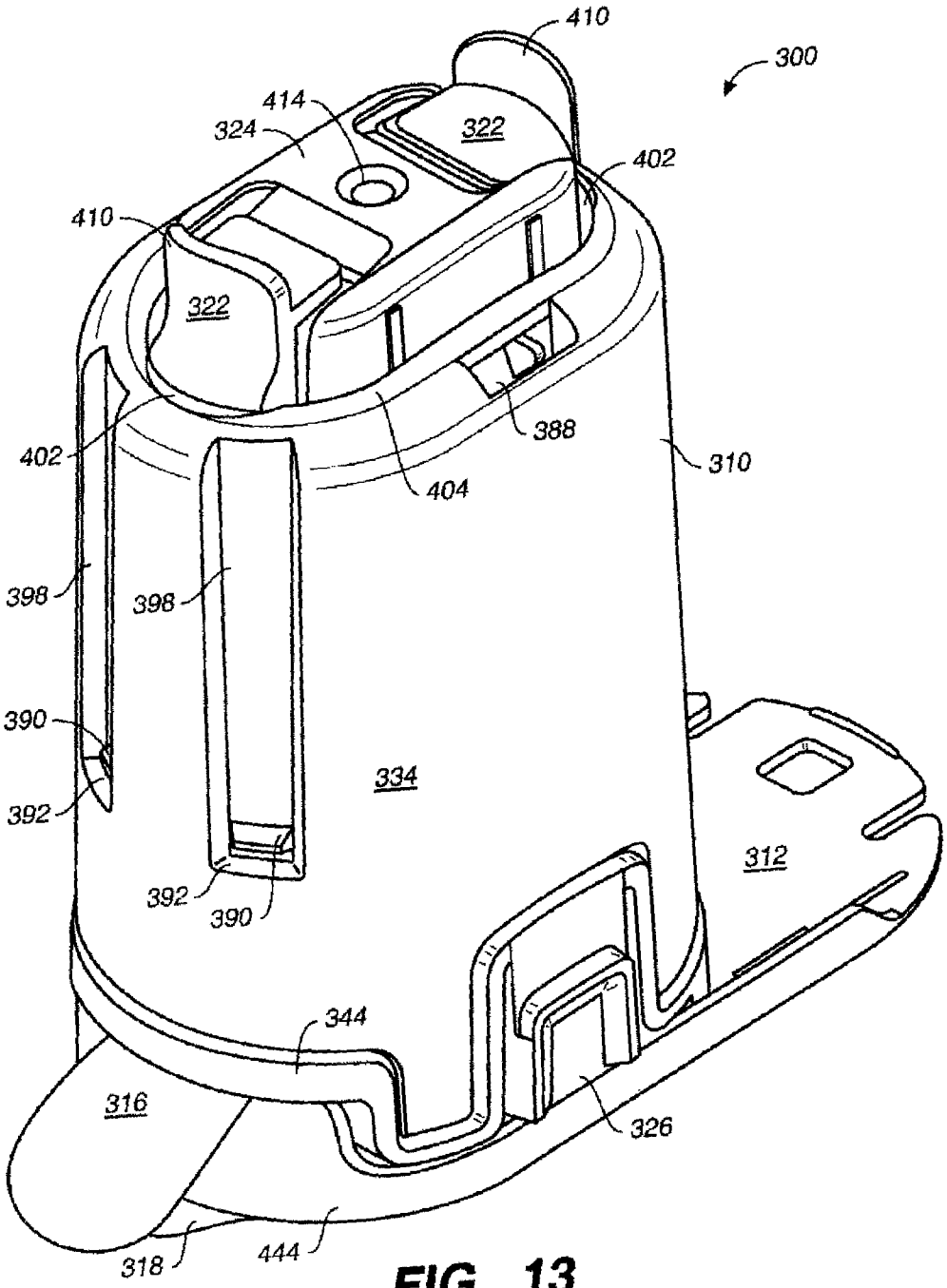
410
300
414
324
322
402
410
322
388
402
404
310
398
398
390
334
392
312
392
390
344
316
326
318
444

FIG._13

FIG._14

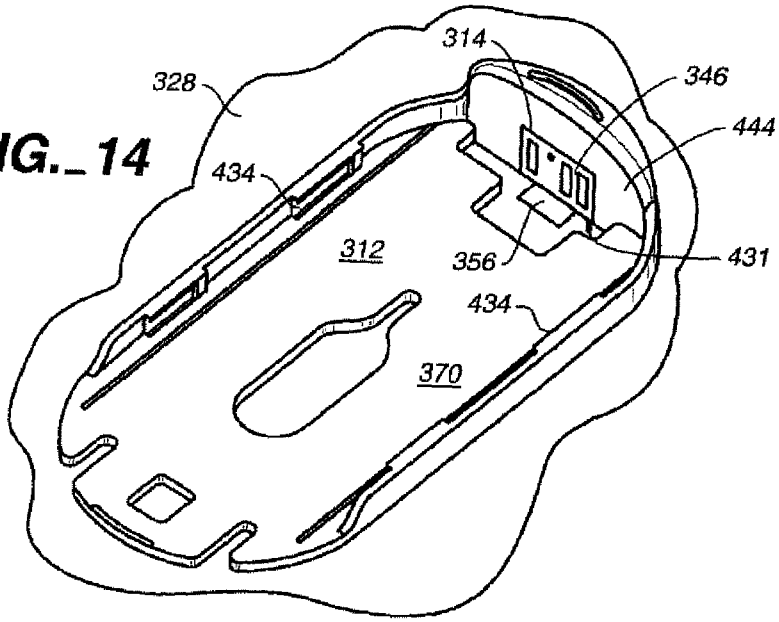

FIG._15

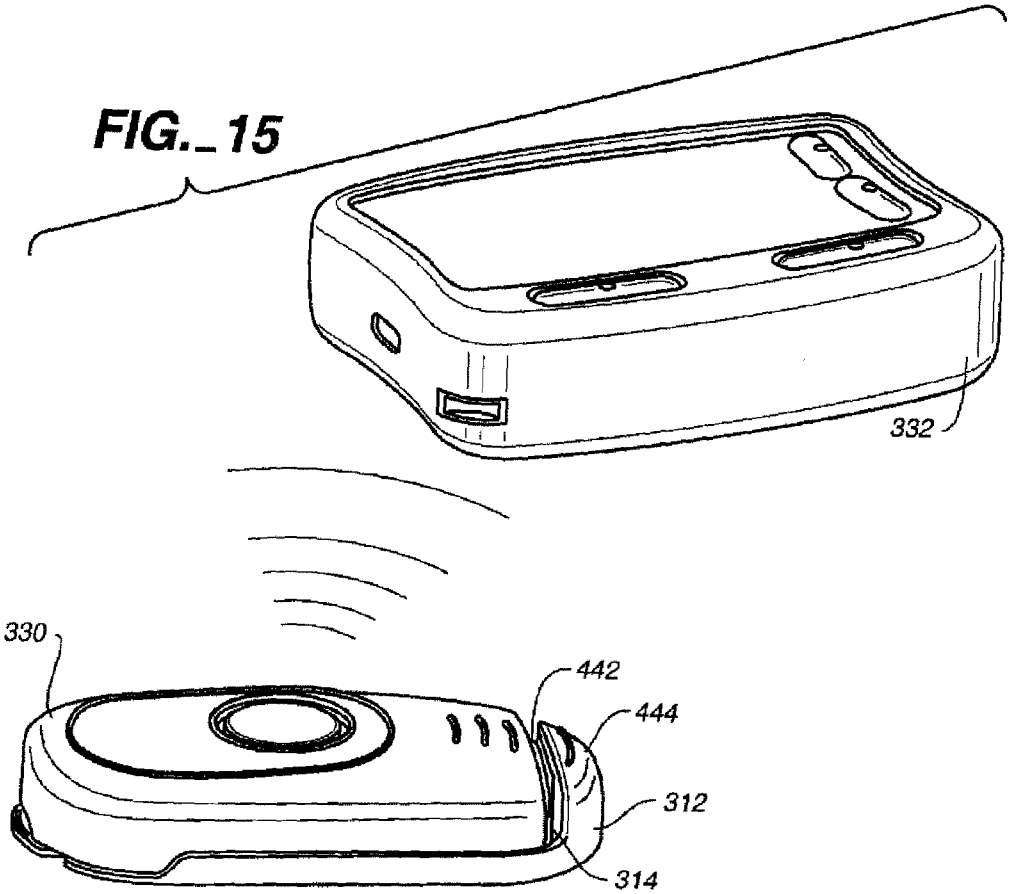

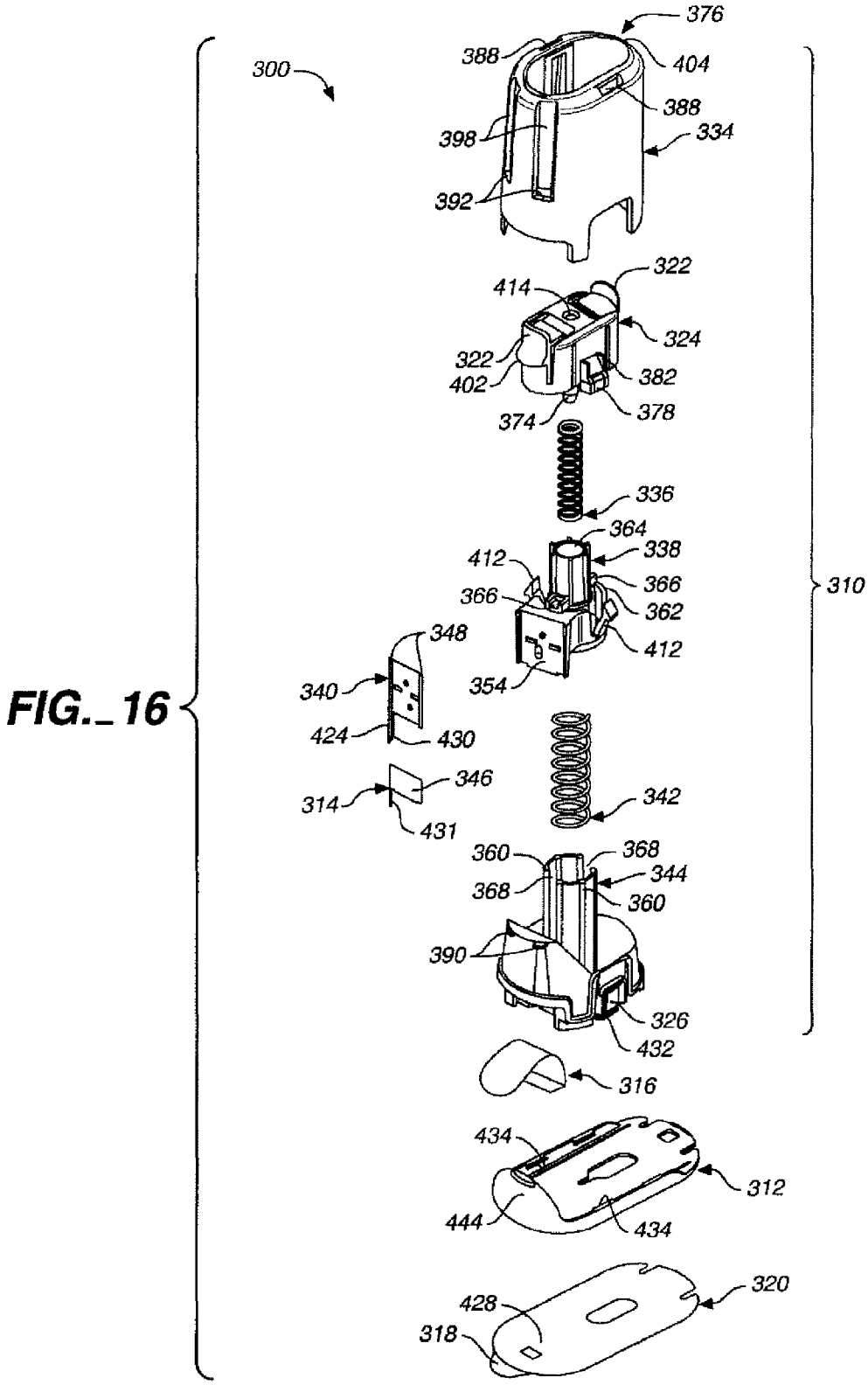
300
376
388
404
388
398
334
392
322
414
324
322
402
382
374
378
336
364
412
338
366
366
362
412
354
348
340
424
430
346
314
431
342
360
368
368
344
360
390
326
432
316
434
312
444
434
320
428
318
310

FIG._16

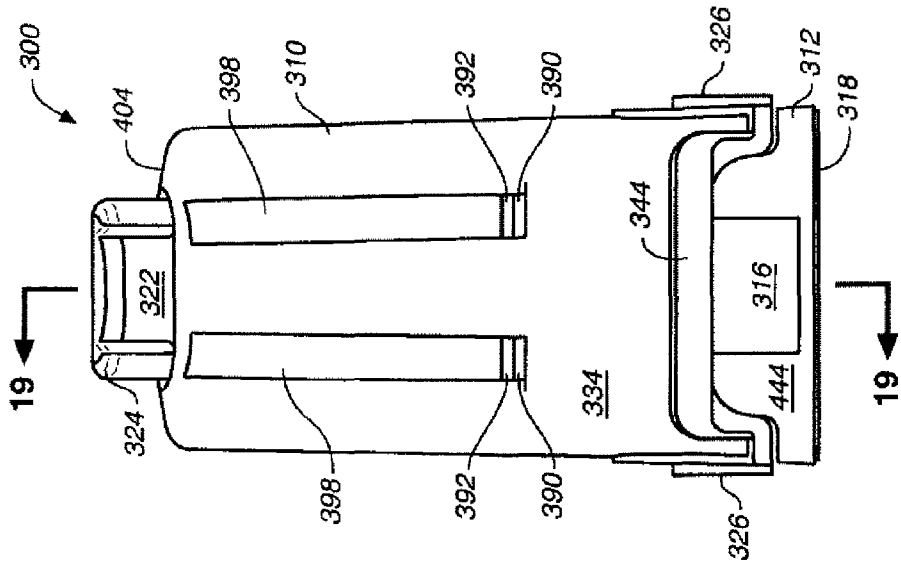
300
404
398
310
392
390
326
312
318
322
324
19
344
316
334
444

FIG._18

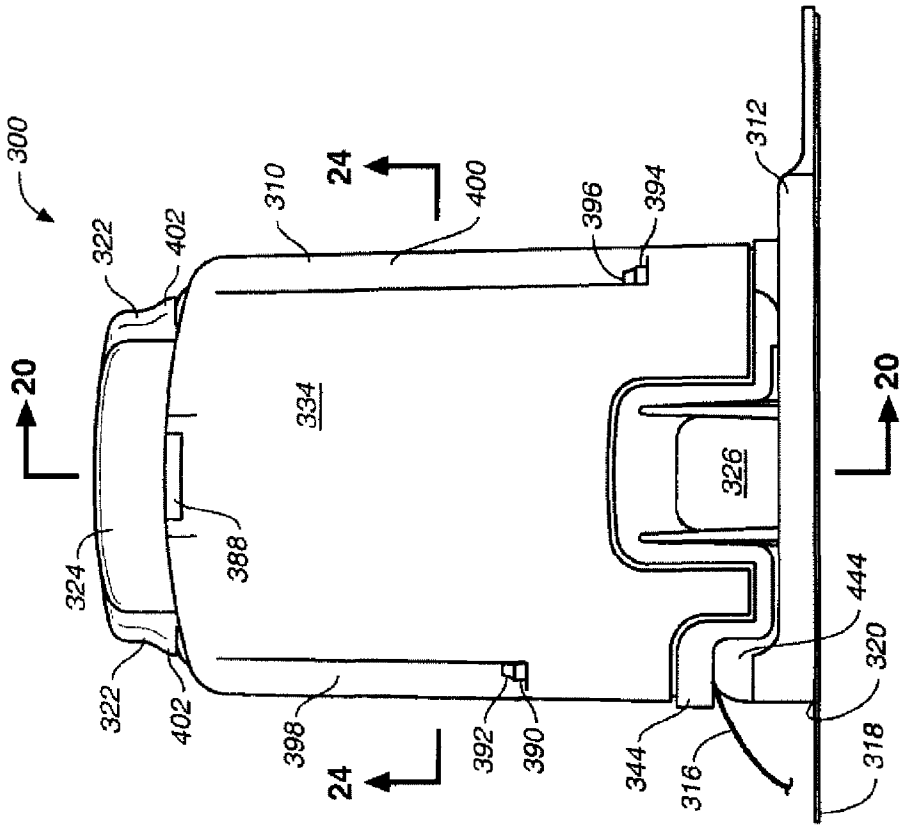
300
322
402
310
24
400
396
394
312
20
334
326
324
388
444
320
318
398
392
390
344
316

FIG._17

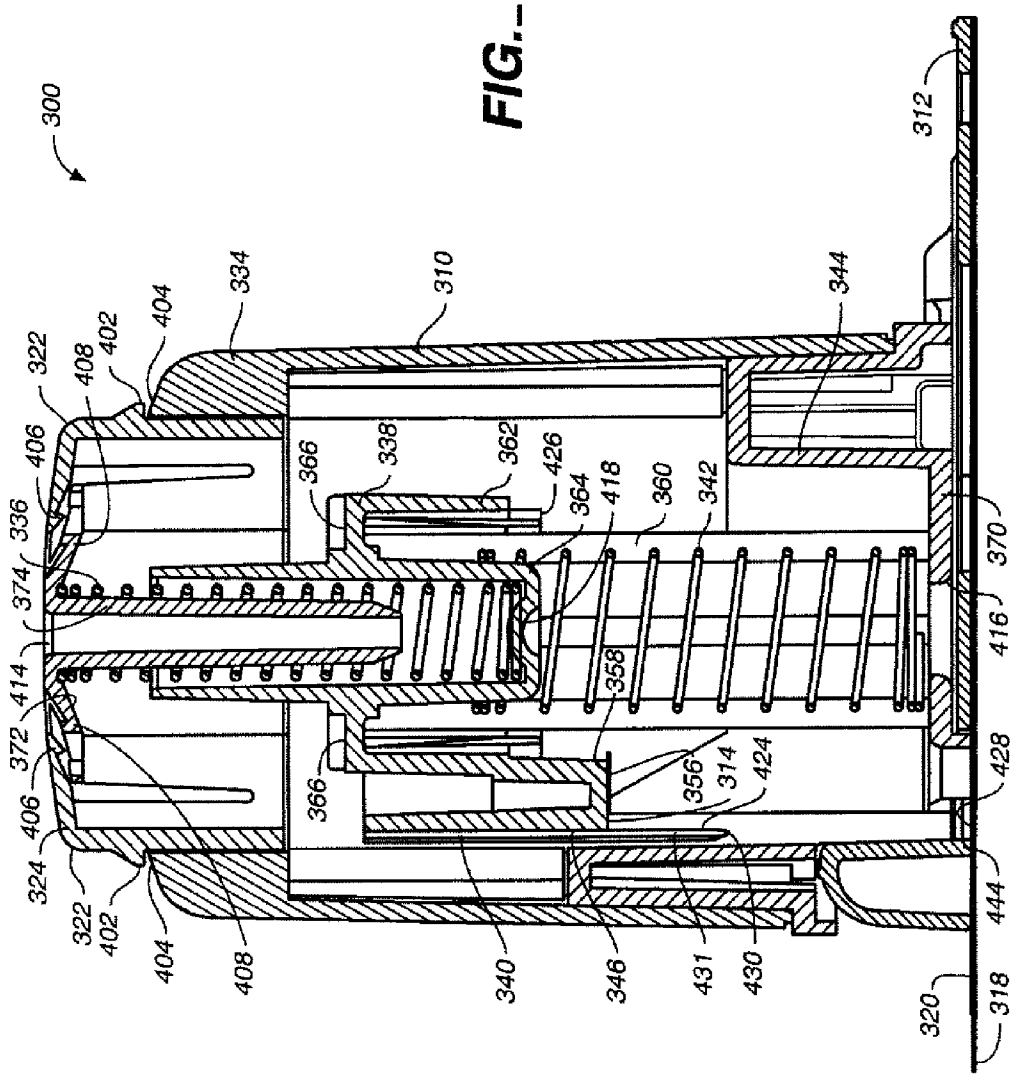
300
322
408
402
404
334
310
344
312
406
336
374
414
372
406
324
322
402
404
408
366
338
362
426
364
418
360
342
358
366
356
314
424
340
346
431
430
370
416
428
444
320
318

FIG._19

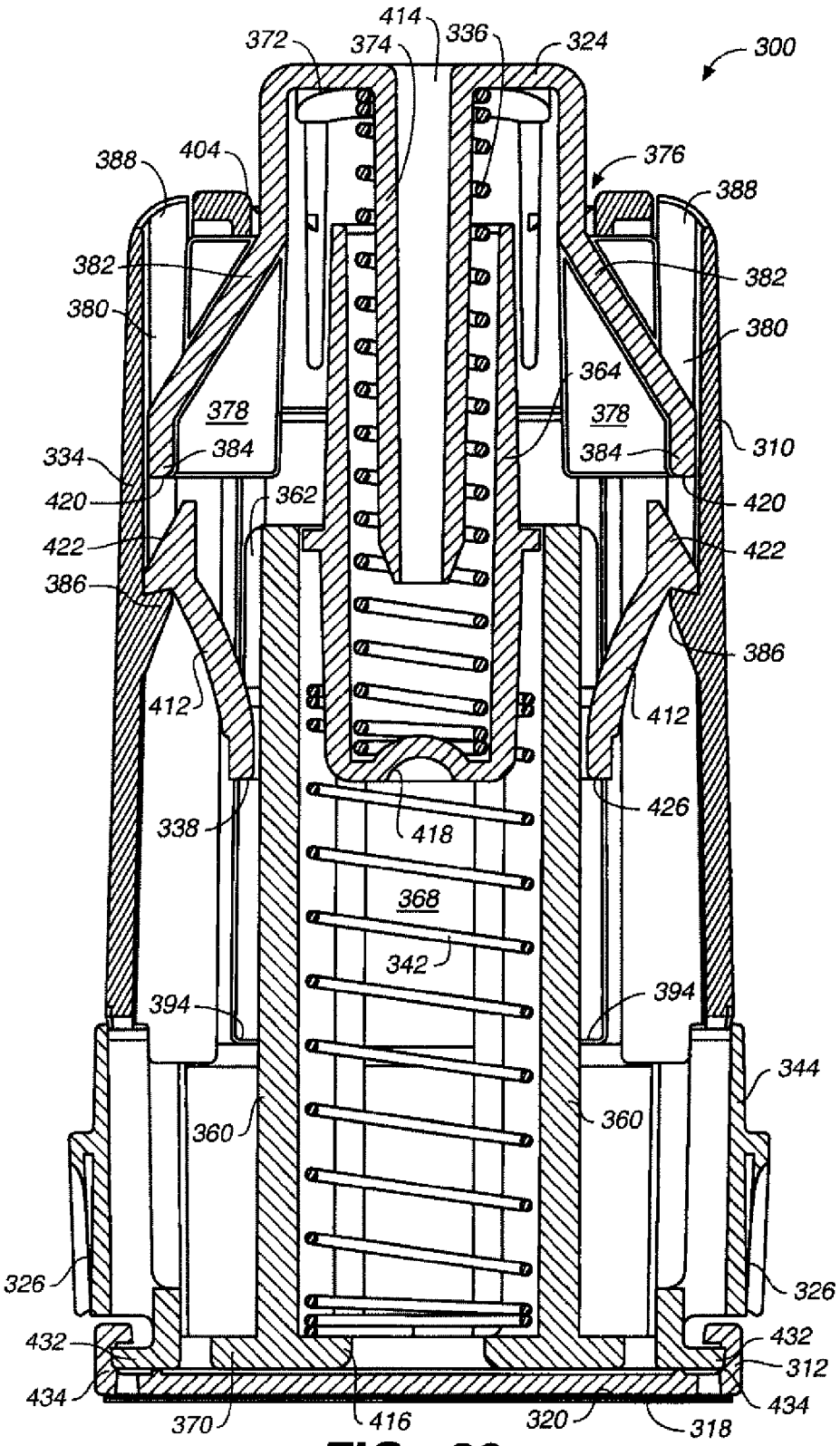
414
372
374
336
324
300
388
404
376
388
382
382
380
380
364
378
378
310
334
384
384
420
362
420
422
422
386
386
412
412
426
338
418
368
342
394
394
344
360
360
326
326
432
432
312
434
434
370
416
320
318

FIG._20

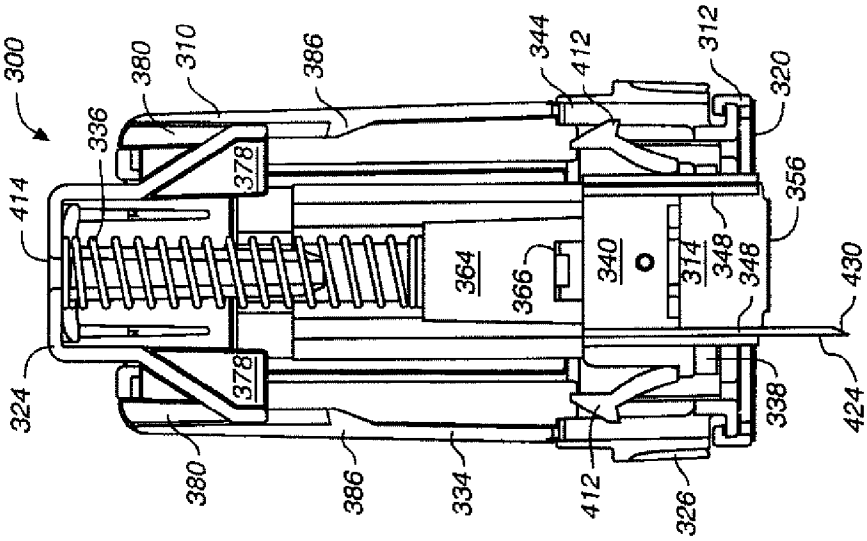

FIG._23

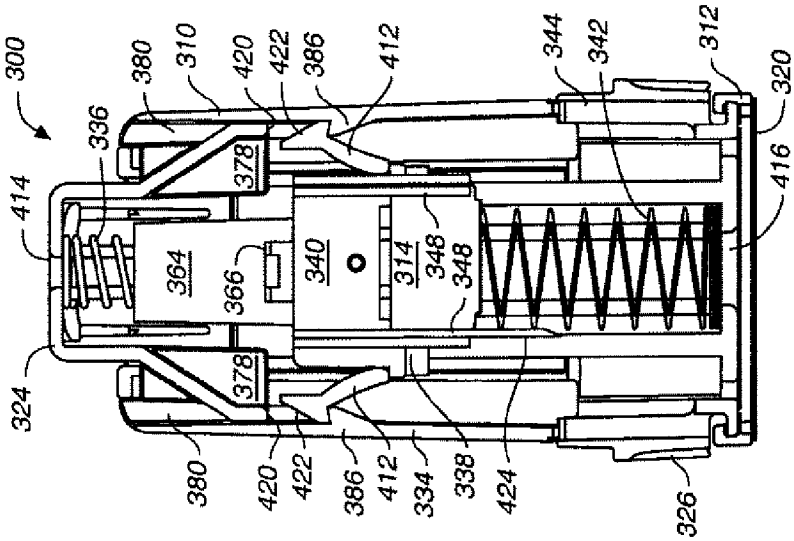

FIG._22

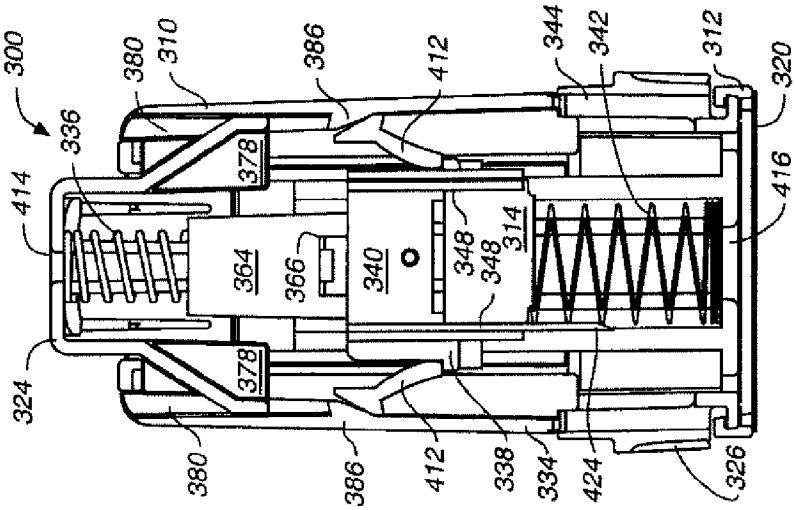

FIG._21

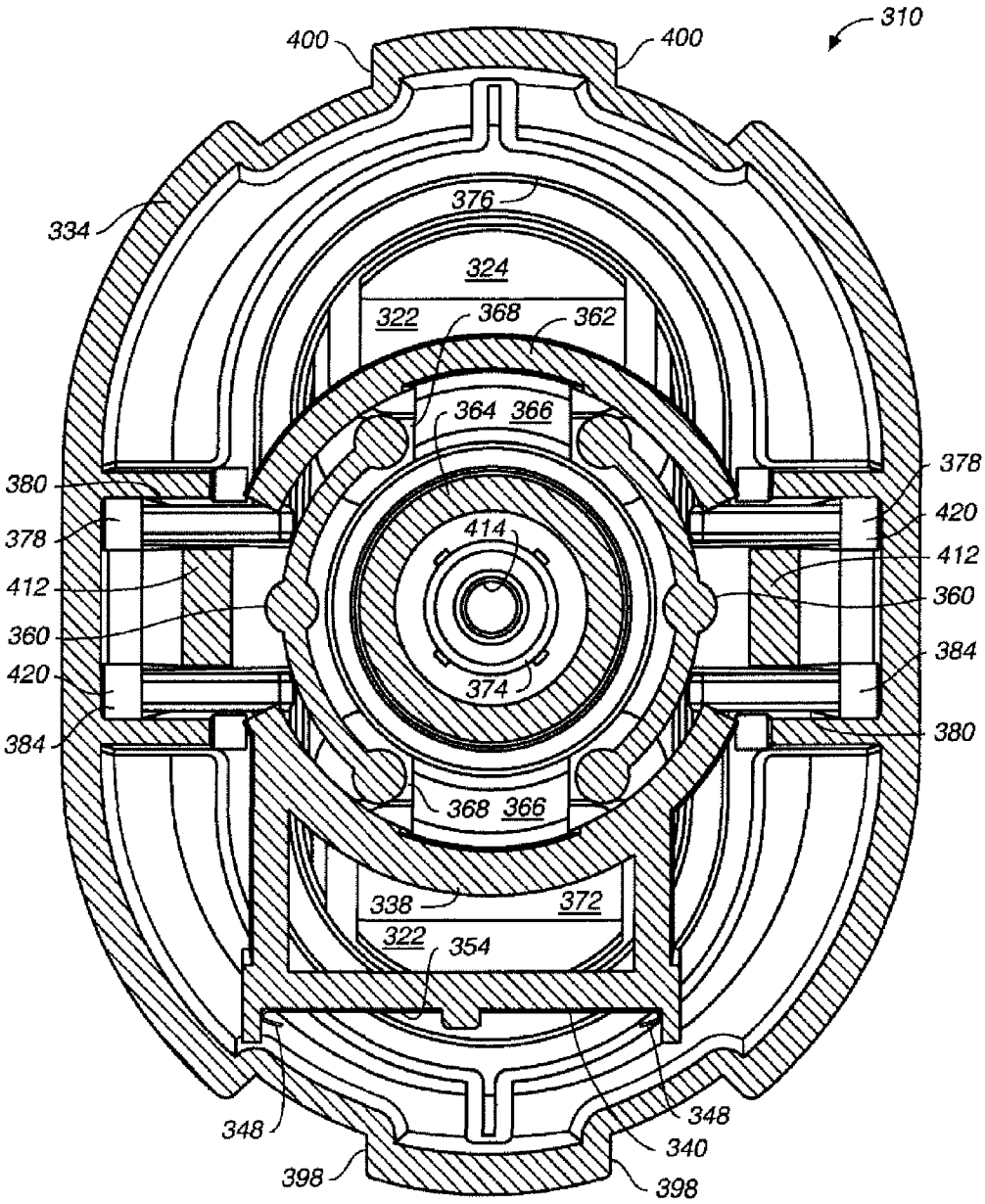
310
400
400
334
376
324
322
368
362
364
366
380
378
414
412
360
420
374
384
368
366
338
372
322
354
348
348
340
398
398

FIG._24

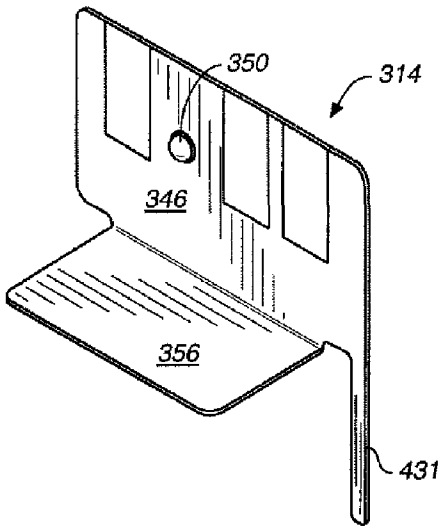

FIG._25

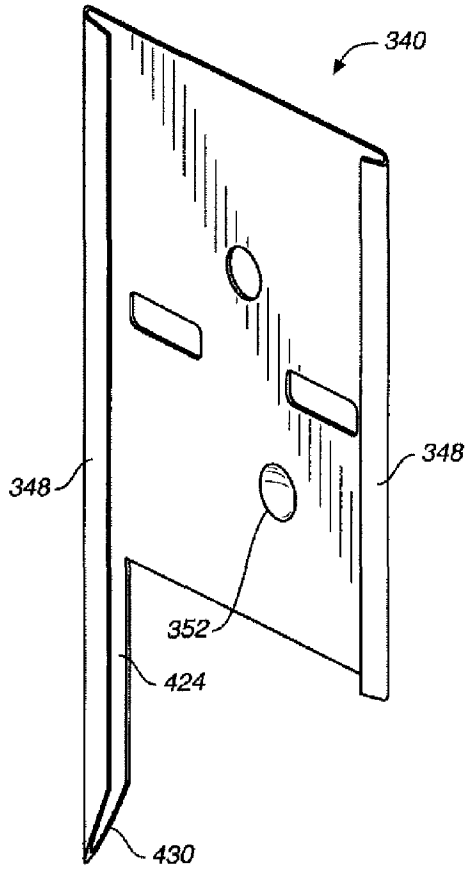

FIG._26A

FIG._26B

FIG._27

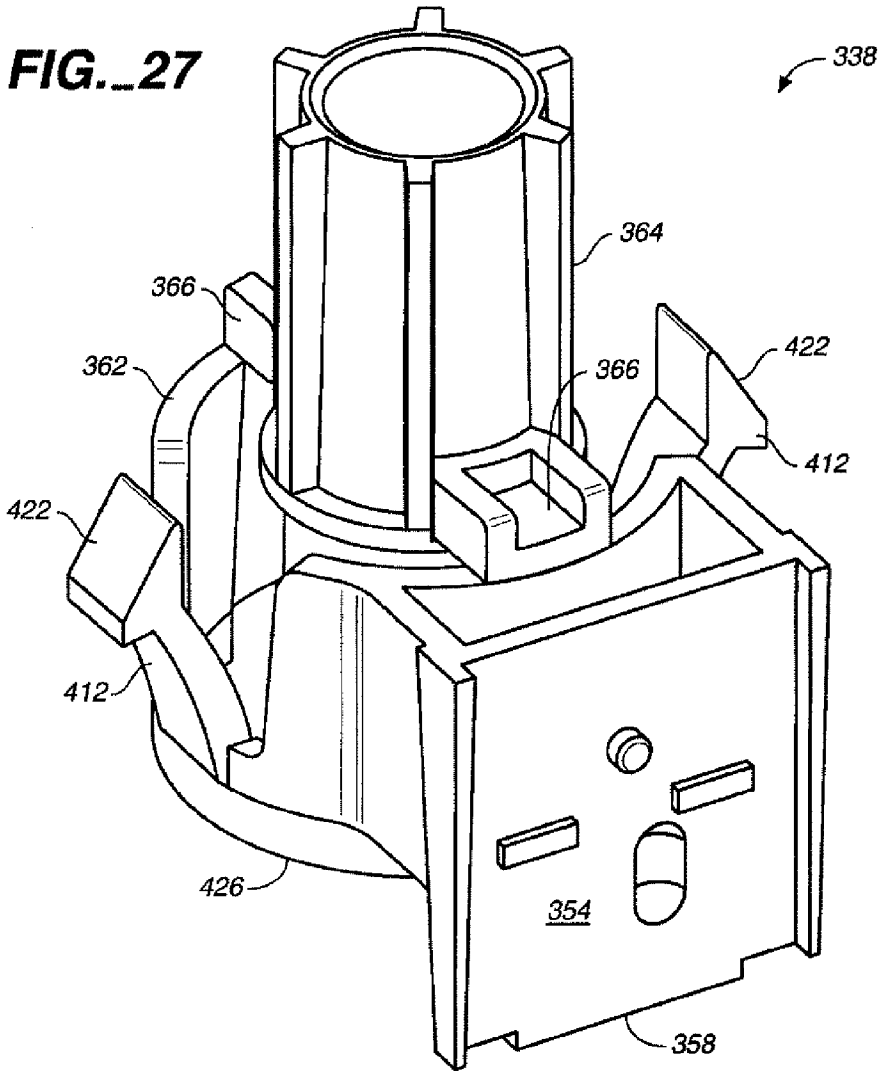
338
364
366
362
366
422
412
422
412
426
354
358

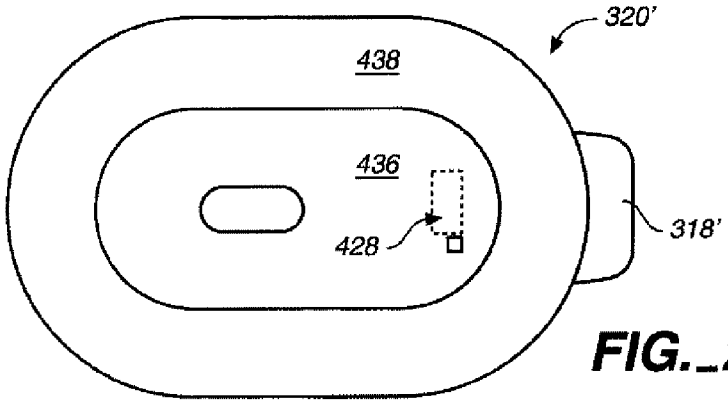
320'
438
436
428
318'

FIG._28

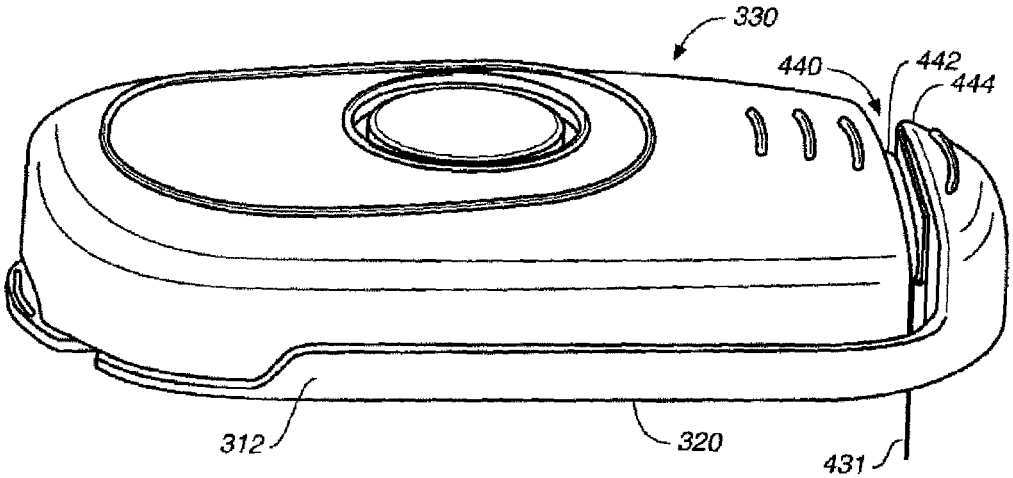

FIG._29

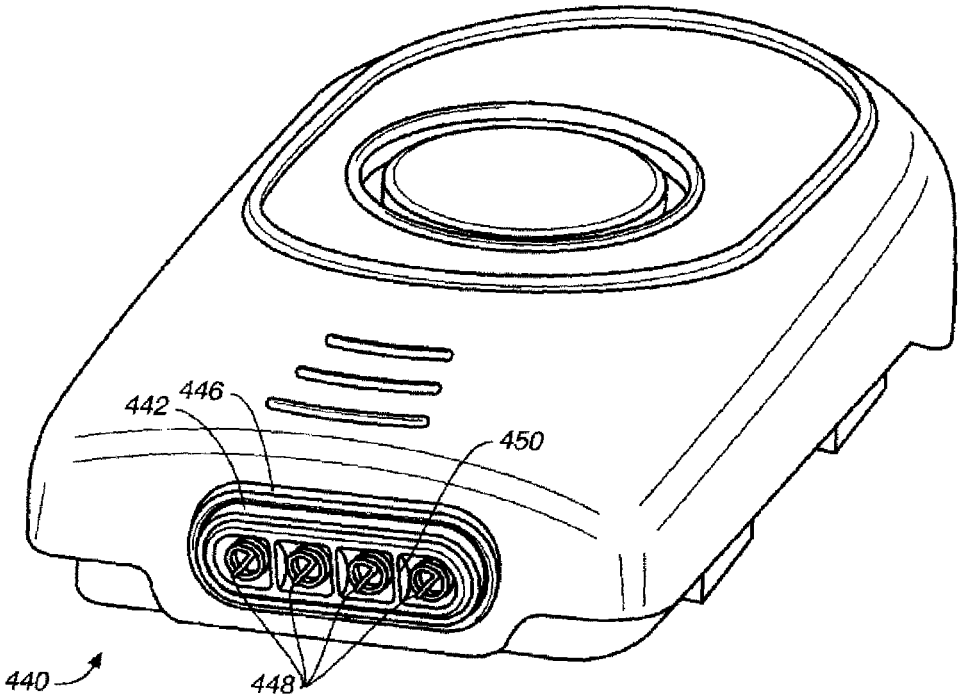

FIG._30

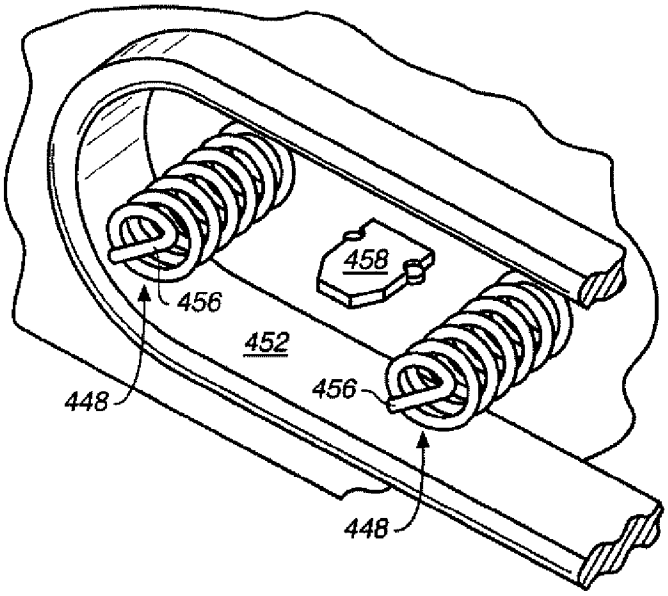
458
456
452
448
456
448

FIG._31

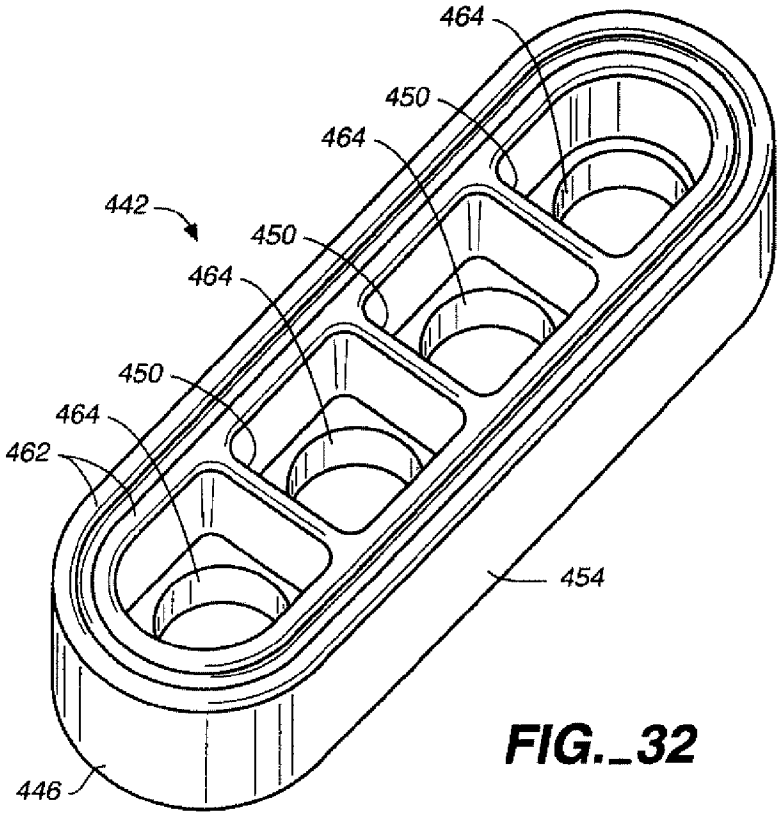
464
450
464
442
450
464
450
464
462
454
446

FIG._32

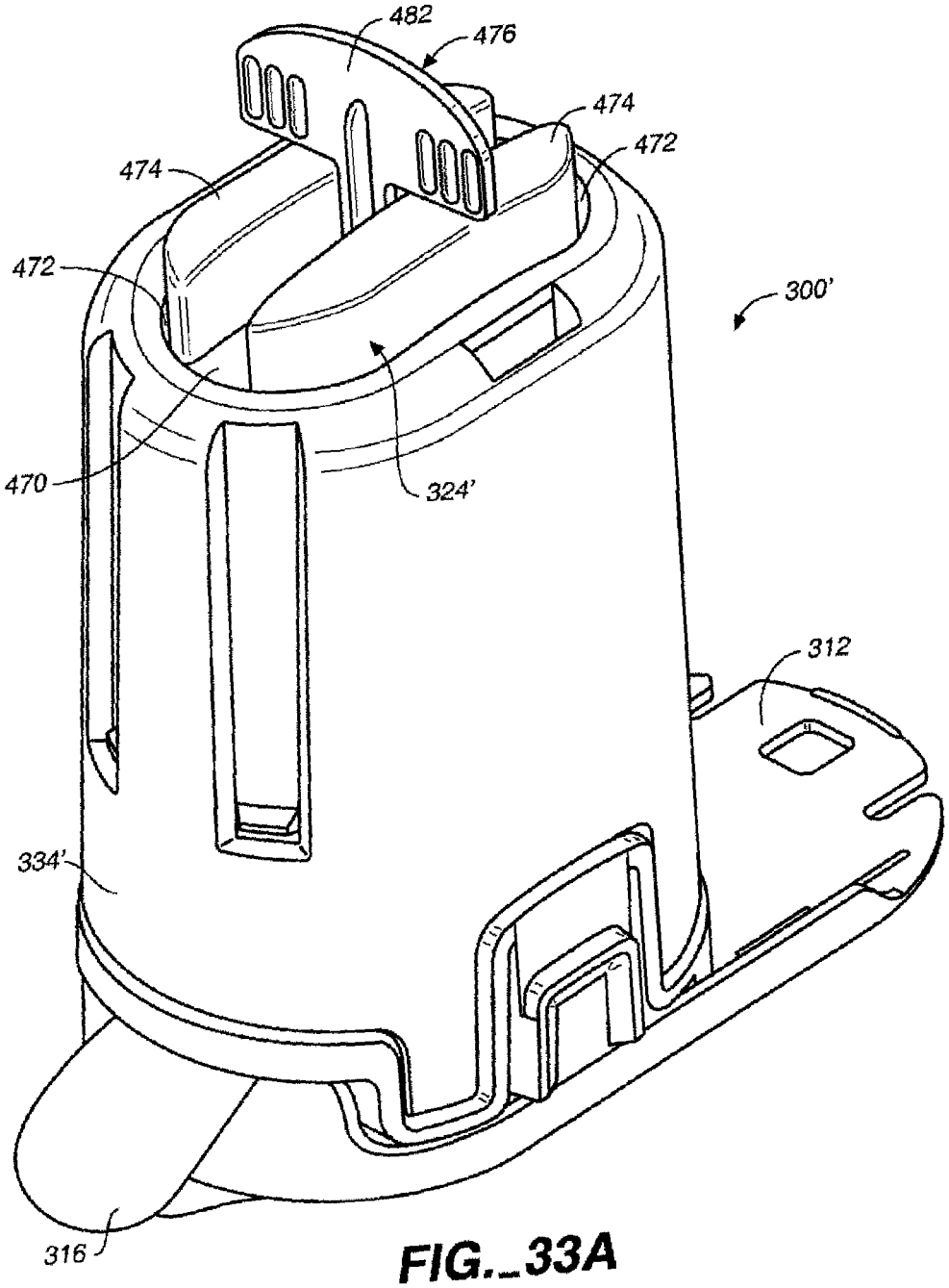

FIG._33A

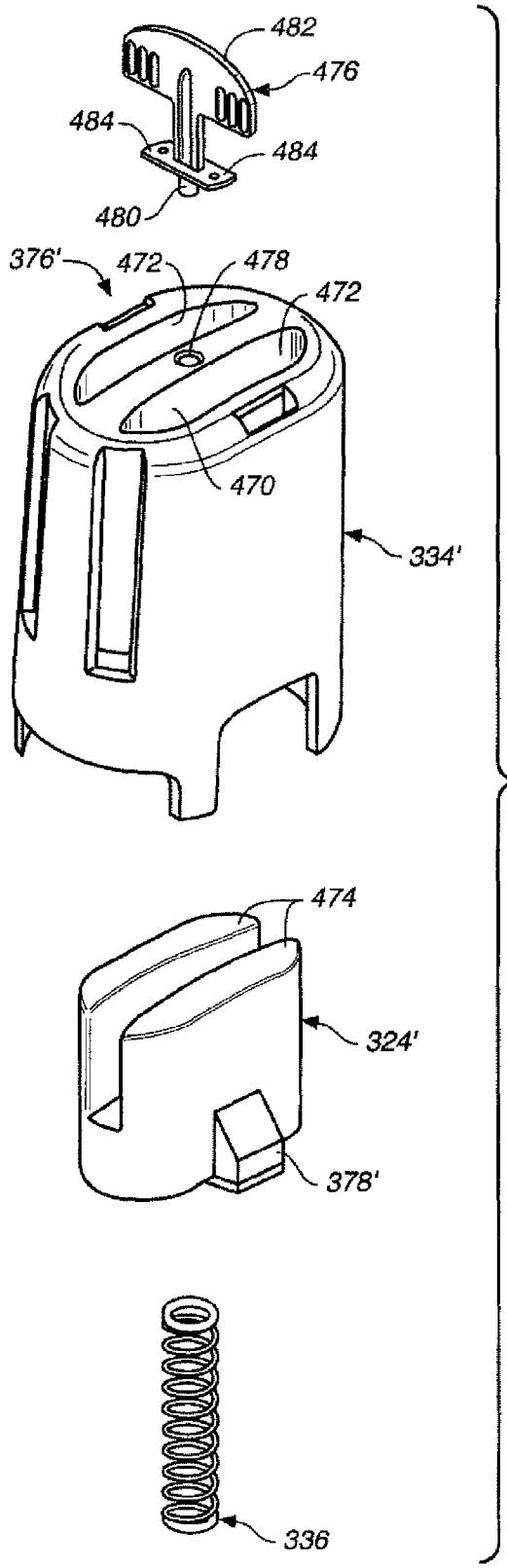

FIG._33B

SENSOR INSERTER ASSEMBLY

CROSS-REFERENCE TO RELATED APPLICATION

This non-provisional application is related to and claims priority based on U.S. Provisional Application No. 60/424,099, entitled "Sensor Inserter Device and Methods of Use," filed on Nov. 5, 2002, which is incorporated herein in its entirety by this reference.

FIELD OF THE INVENTION

The present invention is, in general, directed to devices and methods for the in vivo monitoring of an analyte, such as glucose or lactate, using a sensor to provide information to a patient about the level of the analyte. More particularly, the present invention relates to devices and methods for inserting a subcutaneously implantable electrochemical sensor in a patient for such monitoring.

BACKGROUND OF THE INVENTION

The monitoring of the level of glucose or other analytes, such as lactate or oxygen, in certain individuals is vitally important to their health. High or low levels of glucose or other analytes may have detrimental effects. The monitoring of glucose is particularly important to individuals with diabetes, as they must determine when insulin is needed to reduce glucose levels in their bodies or when additional glucose is needed to raise the level of glucose in their bodies.

A conventional technique used by many diabetics for personally monitoring their blood glucose level includes the periodic drawing of blood, the application of that blood to a test strip, and the determination of the blood glucose level using calorimetric, electrochemical, or photometric detection. This technique does not permit continuous or automatic monitoring of glucose levels in the body, but typically must be performed manually on a periodic basis. Unfortunately, the consistency with which the level of glucose is checked varies widely among individuals. Many diabetics find the periodic testing inconvenient and they sometimes forget to test their glucose level or do not have time for a proper test. In addition, some individuals wish to avoid the pain associated with the test. These situations may result in hyperglycemic or hypoglycemic episodes. An in vivo glucose sensor that continuously or automatically monitors the individual's glucose level would enable individuals to more easily monitor their glucose, or other analyte, levels.

A variety of devices have been developed for continuous or automatic monitoring of analytes, such as glucose, in the blood stream or interstitial fluid. A number of these devices use electrochemical sensors which are directly implanted into a blood vessel or in the subcutaneous tissue of a patient. However, these devices are often difficult to reproducibly and inexpensively manufacture in large numbers. In addition, these devices are typically large, bulky, and/or inflexible, and many can not be used effectively outside of a controlled medical facility, such as a hospital or a doctor's office, unless the patient is restricted in his activities.

Some devices include a sensor guide which rests on or near the skin of the patient and may be attached to the patient to hold the sensor in place. These sensor guides are typically bulky and do not allow for freedom of movement. In addition, the sensor guides or the sensors include cables or wires for connecting the sensor to other equipment to direct the signals from the sensors to an analyzer. The size of the

sensor guides and presence of cables and wires hinders the convenient use of these devices for everyday applications. The patient's comfort and the range of activities that can be performed while the sensor is implanted are important considerations in designing extended-use sensors for continuous or automatic in vivo monitoring of the level of an analyte, such as glucose. There is a need for a small, comfortable device which can continuously monitor the level of an analyte, such as glucose, while still permitting the patient to engage in normal activities. Continuous and/or automatic monitoring of the analyte can provide a warning to the patient when the level of the analyte is at or near a threshold level. For example, if glucose is the analyte, then the monitoring device might be configured to warn the patient of current or impending hyperglycemia or hypoglycemia. The patient can then take appropriate actions.

SUMMARY OF THE INVENTION

Generally, the present invention relates to methods and devices for the continuous and/or automatic in vivo monitoring of the level of an analyte using a subcutaneously implantable sensor. Many of these devices are small and comfortable when used, thereby allowing a wide range of activities. One embodiment includes a sensor control unit having a housing adapted for placement on skin. The housing is also adapted to receive a portion of an electrochemical sensor. The sensor control unit includes two or more conductive contacts disposed on the housing and configured for coupling to two or more contact pads on the sensor. A transmitter is disposed in the housing and coupled to the plurality of conductive contacts for transmitting data obtained using the sensor. The sensor control unit may also include a variety of optional components, such as, for example, adhesive for adhering to the skin, a mounting unit, a receiver, a processing circuit, a power supply (e.g., a battery), an alarm system, a data storage unit, a watchdog circuit, and a measurement circuit. The sensor itself has at least one working electrode and at least one contact pad coupled to the working electrode or electrodes. The sensor may also include optional components, such as, for example, a counter electrode, a counter/reference electrode, a reference electrode, and a temperature probe. The analyte monitoring system also includes a display unit that has a receiver for receiving data from the sensor control unit and a display coupled to the receiver for displaying an indication of the level of an analyte. The display unit may optionally include a variety of components, such as, for example, a transmitter, an analyzer, a data storage unit, a watchdog circuit, an input device, a power supply, a clock, a lamp, a pager, a telephone interface, a computer interface, an alarm or alarm system, a radio, and a calibration unit. In addition, the analyte monitoring system or a component of the analyte monitoring system may optionally include a processor capable of determining a drug or treatment protocol and/or a drug delivery system.

According to one aspect of the invention, an insertion kit is disclosed for inserting an electrochemical sensor into a patient. The insertion kit includes an introducer. A portion of the introducer has a sharp, rigid, planer structure adapted to support the sensor during insertion of the electrochemical sensor. The insertion kit also includes an insertion gun having a port configured to accept the electrochemical sensor and the introducer. The insertion gun has a driving mechanism for driving the introducer and electrochemical

sensor into the patient, and a retraction mechanism for removing the introducer while leaving the sensor within the patient.

According to another aspect of the invention, a method of using an electrochemical sensor is disclosed. A mounting unit is adhered to skin of a patient. An insertion gun is aligned with a port on the mounting unit. The electrochemical sensor is disposed within the insertion gun and then the electrochemical sensor is inserted into the skin of the patient using the insertion gun. The insertion gun is removed and a housing of the sensor control unit is mounted on the mounting base. A plurality of conductive contacts disposed on the housing is coupled to a plurality of contact pads disposed on the electrochemical sensor to prepare the sensor for use.

The above summary of the present invention is not intended to describe each disclosed embodiment or every implementation of the present invention. The Figures and the detailed description which follow more particularly exemplify these embodiments.

BRIEF DESCRIPTION OF THE DRAWINGS

The invention may be more completely understood in consideration of the following detailed description of various embodiments of the invention in connection with the accompanying drawings, in which:

FIG. **1** is a block diagram of one embodiment of a subcutaneous analyte monitor using a subcutaneously implantable analyte sensor, according to the invention.

FIG. **2** is a top view of one embodiment of an analyte sensor, according to the invention.

FIG. **3** is an expanded side view of one embodiment of a sensor and an introducer, according to the invention.

FIGS. **4**A, **4**B, **4**C are cross-sectional views of three embodiments of the introducer of FIG. **3**.

FIG. **5** is a cross-sectional view of one embodiment of a on-skin sensor control unit, according to the invention.

FIG. **6** is a top view of a base of the on-skin sensor control unit of FIG. **5**.

FIG. **7** is a bottom view of a cover of the on-skin sensor control unit of FIG. **5**.

FIG. **8** is a perspective view of the on-skin sensor control unit of FIG. **5** on the skin of a patient.

FIG. **9** is a perspective view of the internal structure of an insertion gun, according to the invention.

FIG. **10**A is a top view of one embodiment of an on-skin sensor control unit, according to the invention.

FIG. **10**B is a top view of one embodiment of a mounting unit of the on-skin sensor control unit of FIG. **10**A.

FIG. **11**A is a top view of another embodiment of an on-skin sensor control unit after insertion of an introducer and a sensor, according to the invention.

FIG. **11**B is a top view of one embodiment of a mounting unit of the on-skin sensor control unit of FIG. **11**A.

FIG. **11**C is a top view of one embodiment of a housing for at least a portion of the electronics of the on-skin sensor control unit of FIG. **11**A.

FIG. **11**D is a bottom view of the housing of FIG. **11**C.

FIG. **11**E is a top view of the on-skin sensor control unit of FIG. **11**A with a cover of the housing removed.

FIG. **12** depicts an introducer, sensor, insertion gun and mounting unit, which can be assembled and sold together in an insertion kit.

FIG. **13** is a perspective view showing a preferred commercial embodiment of a sensor inserter and adhesive mount constructed according to the invention.

FIG. **14** is a perspective view of the adhesive mount and sensor attached to the patient's skin.

FIG. **15** is a perspective view of the transmitter attached to the adhesive mount.

FIG. **16** is an exploded perspective view of the preferred commercial embodiment of FIG. **13**.

FIG. **17** is a side elevation view of the preferred commercial embodiment of FIG. **13**.

FIG. **18** is an end elevation view of the preferred commercial embodiment of FIG. **13**.

FIG. **19** is a cross-sectional view taken along line **19-19** in FIG. **18**.

FIG. **20** is a cross-sectional view taken along line **20-20** in FIG. **17**.

FIG. **21** is a broken away view similar to FIG. **20**, showing the shuttle in the neutral position.

FIG. **22** is a broken away view similar to FIG. **20**, showing the shuttle in the cocked position.

FIG. **23** is a broken away view similar to FIG. **20**, showing the shuttle in the insertion position.

FIG. **24** is a cross-sectional view taken along line **24-24** in FIG. **17**.

FIG. **25** is a perspective view of a transcutaneously implantable sensor.

FIG. **26**A is a perspective view of a sensor introducer.

FIG. **26**B is a bottom view of the introducer shown in FIG. **26**A.

FIG. **27** is a perspective view of a shuttle member.

FIG. **28** is a top plan view of an oversized adhesive tape.

FIG. **29** is a perspective view of the transmitter attached to the adhesive mount and showing the sensor sandwiched therebetween.

FIG. **30** is a perspective view of the interconnect on one end of the transmitter.

FIG. **31** is an enlarged perspective view of the interconnect of FIG. **30** with the seal and one spring removed for clarity.

FIG. **32** is an enlarged perspective view of the interconnect seal.

FIG. **33**A is a perspective view of an alternative embodiment of a sensor inserter kit.

FIG. **33**B is an exploded view of some of the components shown assembled in FIG. **33**A.

While the invention is amenable to various modifications and alternative forms, specifics thereof have been shown by way of example in the drawings and will be described in detail. It should be understood, however, that the intention is not to limit the invention to the particular embodiments described. On the contrary, the intention is to cover all modifications, equivalents, and alternatives falling within the spirit and scope of the invention.

DETAILED DESCRIPTION OF THE INVENTION

The present invention is applicable to an analyte monitoring system using an implantable sensor for the in vivo determination of a concentration of an analyte, such as glucose or lactate, in a fluid. The sensor can be, for example, subcutaneously implanted in a patient for the continuous or periodic monitoring an analyte in a patient's interstitial fluid. This can then be used to infer the glucose level in the patient's bloodstream. Other in vivo analyte sensors can be made, according to the invention, for insertion into a vein, artery, or other portion of the body containing fluid. The analyte monitoring system is typically configured for moni-

toring the level of the analyte over a time period which may range from days to weeks or longer.

The analyte monitoring systems of the present invention can be utilized under a variety of conditions. The particular configuration of a sensor and other units used in the analyte monitoring system may depend on the use for which the analyte monitoring system is intended and the conditions under which the analyte monitoring system will operate. One embodiment of the analyte monitoring system includes a sensor configured for implantation into a patient or user. For example, implantation of the sensor may be made in the arterial or venous systems for direct testing of analyte levels in blood. Alternatively, a sensor may be implanted in the interstitial tissue for determining the analyte level in interstitial fluid. This level may be correlated and/or converted to analyte levels in blood or other fluids. The site and depth of implantation may affect the particular shape, components, and configuration of the sensor. Subcutaneous implantation may be preferred, in some cases, to limit the depth of implantation of the sensor. Sensors may also be implanted in other regions of the body to determine analyte levels in other fluids. Examples of suitable sensor for use in the analyte monitoring systems of the invention are described in U.S. patent application Ser. No. 09/034,372 and Ser. No. 09/753,746 (the complete parent application to this CIP), both incorporated herein by reference.

One embodiment of the analyte monitoring system **40** for use with an implantable sensor **42**, and particularly for use with a subcutaneously implantable sensor, is illustrated in block diagram form in FIG. **1**. The analyte monitoring system **40** includes, at minimum, a sensor **42**, a portion of which is configured for implantation (e.g., subcutaneous, venous, or arterial implantation) into a patient, and a sensor control unit **44**. The sensor **42** is coupled to the sensor control unit **44** which is typically attached to the skin of a patient. The sensor control unit **44** operates the sensor **42**, including, for example, providing a voltage across the electrodes of the sensor **42** and collecting signals from the sensor **42**. The sensor control unit **44** may evaluate the signals from the sensor **42** and/or transmit the signals to one or more optional receiver/display units **46**, **48** for evaluation. The sensor control unit **44** and/or the receiver/display units **46**, **48** may display or otherwise communicate the current level of the analyte. Furthermore, the sensor control unit **44** and/or the receiver/display units **46**, **48** may indicate to the patient, via, for example, an audible, visual, or other sensory-stimulating alarm, when the level of the analyte is at or near a threshold level. In some embodiments, a electrical shock can be delivered to the patient as a warning through one of the electrodes or the optional temperature probe of the sensor. For example, if glucose is monitored then an alarm may be used to alert the patient to a hypoglycemic or hyperglycemic glucose level and/or to impending hypoglycemia or hyperglycemia.

A sensor **42** includes at least one working electrode **58** formed on a substrate **50**, as shown in FIG. **2**. The sensor **42** may also include at least one counter electrode **60** (or counter/reference electrode) and/or at least one reference electrode **62**. The substrate **50** of the sensor may be formed using a variety of non-conducting materials, including, for example, polymeric or plastic materials and ceramic materials. Suitable materials for a particular sensor **42** may be determined, at least in part, based on the desired use of the sensor **42** and properties of the materials.

In some embodiments, the substrate is flexible. For example, if the sensor **42** is configured for implantation into a patient, then the sensor **42** may be made flexible (although rigid sensors may also be used for implantable sensors) to reduce pain to the patient and damage to the tissue caused by the implantation of and/or the wearing of the sensor **42**. A flexible substrate **50** often increases the patient's comfort and allows a wider range of activities. Suitable materials for a flexible substrate **50** include, for example, non-conducting plastic or polymeric materials and other non-conducting, flexible, deformable materials. Examples of useful plastic or polymeric materials include thermoplastics such as polycarbonates, polyesters (e.g., Mylar™ and polyethylene terephthalate (PET)), polyvinyl chloride (PVC), polyurethanes, polyethers, polyamides, polyimides, or copolymers of these thermoplastics, such as PETG (glycol-modified polyethylene terephthalate).

In other embodiments, the sensors **42** are made using a relatively rigid substrate **50** to, for example, provide structural support against bending or breaking. Examples of rigid materials that may be used as the substrate **50** include poorly conducting ceramics, such as aluminum oxide and silicon dioxide. One advantage of an implantable sensor **42** having a rigid substrate is that the sensor **42** may have a sharp point and/or a sharp edge to aid in implantation of a sensor **42** without an additional introducer.

It will be appreciated that for many sensors **42** and sensor applications, both rigid and flexible sensors will operate adequately. The flexibility of the sensor **42** may also be controlled and varied along a continuum by changing, for example, the composition and/or thickness of the substrate **50**.

In addition to considerations regarding flexibility, it is often desirable that implantable sensors **42** should have a substrate **50** which is non-toxic. Preferably, the substrate **50** is approved by one or more appropriate governmental agencies or private groups for in vivo use.

Although the substrate **50** in at least some embodiments has uniform dimensions along the entire length of the sensor **42**, in other embodiments, the substrate **50** has a distal end **67** and a proximal end **65** with different widths **53**, **55**, respectively, as illustrated in FIG. **2**. In these embodiments, the distal end **67** of the substrate **50** may have a relatively narrow width **53**. For sensors **42** which are implantable into the subcutaneous tissue or another portion of a patient's body, the narrow width **53** of the distal end **67** of the substrate **50** may facilitate the implantation of the sensor **42**. Often, the narrower the width of the sensor **42**, the less pain the patient will feel during implantation of the sensor and afterwards. The sensor **42** is designed to be a replaceable component in an implantable analyte monitor. Typically, the sensor **42** is capable of operation over a period of days. Preferably, the period of operation is at least three days. The sensor **42** can then be removed and replaced with a new sensor.

An introducer **120** can be used to subcutaneously insert the sensor **42** into the patient, as illustrated in FIG. **3**. The introducer **120** is typically formed using structurally rigid materials, such as metal or rigid plastic. Preferred materials include stainless steel and ABS (acrylonitrile-butadiene-styrene) plastic. In some embodiments, the introducer **120** is pointed and/or sharp at the tip **121** to facilitate penetration of the skin of the patient. A sharp, thin introducer may reduce pain felt by the patient upon insertion of the sensor **42**. In other embodiments, the tip **121** of the introducer **120** has other shapes, including a blunt or flat shape. These embodiments may be particularly useful when the introducer **120** does not penetrate the skin but rather serves as a structural support for the sensor **42** as the sensor **42** is pushed into the skin.

The introducer **120** may have a variety of cross-sectional shapes, as shown in FIGS. **4**A, **4**B, and **4**C. The introducer **120** illustrated in FIG. **4**A is a flat, planar, pointed strip of rigid material which may be attached or otherwise coupled to the sensor **42** to ease insertion of the sensor **42** into the skin of the patient, as well as to provide structural support to the sensor **42** during insertion. The introducers **120** of FIGS. **4**B and **4**C are U- or V-shaped implements that support the sensor **42** to limit the amount that the sensor **42** may bend or bow during insertion. The cross-sectional width **124** of the introducers **120** illustrated in FIGS. **4**B and **4**C is typically 1 mm or less, preferably 700 μm or less, more preferably 500 μm or less, and most preferably 300 μm or less. The cross-sectional height **126** of the introducer **120** illustrated in FIGS. **4**B and **4**C is typically about 1 mm or less, preferably about 700 μm or less, and more preferably about 500 μm or less.

The sensor **42** itself may include optional features to facilitate insertion. For example, the sensor **42** may be pointed at the tip **123** to ease insertion, as illustrated in FIG. **3**. In addition, the sensor **42** may include a barb **125** which helps retain the sensor **42** in the subcutaneous tissue of the patient. The barb **125** may also assist in anchoring the sensor **42** within the subcutaneous tissue of the patient during operation of the sensor **42**. However, the barb **125** is typically small enough that little damage is caused to the subcutaneous tissue when the sensor **42** is removed for replacement. The sensor **42** may also include a notch **127** that can be used in cooperation with a corresponding structure (not shown) in the introducer to apply pressure against the sensor **42** during insertion, but disengage as the introducer **120** is removed. One example of such a structure in the insertion device is a rod (not shown) between two opposing sides of an introducer **120** and at an appropriate height of the introducer **120**.

In operation, the sensor **42** is placed within or next to the introducer **120** and then a force is provided against the introducer **120** and/or sensor **42** to carry the sensor **42** into the skin of the patient. In one embodiment, the force is applied to the sensor **42** to push the sensor into the skin, while the introducer **120** remains stationary and provides structural support to the sensor **42**. Alternatively, the force is applied to the introducer **120** and optionally to the sensor **42** to push a portion of both the sensor **42** and the introducer **120** through the skin of the patient and into the subcutaneous tissue. The introducer **120** is optionally pulled out of the skin and subcutaneous tissue with the sensor **42** remaining in the subcutaneous tissue due to frictional forces between the sensor **42** and the patient's tissue. If the sensor **42** includes the optional barb **125**, then this structure may also facilitate the retention of the sensor **42** within the interstitial tissue as the barb catches in the tissue.

The force applied to the introducer **120** and/or the sensor **42** may be applied manually or mechanically. Preferably, the sensor **42** is reproducibly inserted through the skin of the patient. In one embodiment, an insertion gun is used to insert the sensor. One example of an insertion gun **200** for inserting a sensor **42** is shown in FIG. **9**. The insertion gun **200** includes a housing **202** and a carrier **204**. The introducer **120** is typically mounted on the carrier **204** and the sensor **42** is pre-loaded into the introducer **120**. The carrier **204** drives the sensor **42** and, optionally, the introducer **120** into the skin of the patient using, for example, a cocked or wound spring, a burst of compressed gas, an electromagnet repelled by a second magnet, or the like, within the insertion gun **200**. In some instances, for example, when using a spring, the carrier **204** and introducer **120** may be moved, cocked, or otherwise prepared to be directed towards the skin of the patient.

After the sensor **42** is inserted, the insertion gun **200** may contain a mechanism which pulls the introducer **120** out of the skin of the patient. Such a mechanism may use a spring, electromagnet, or the like to remove the introducer **120**.

The insertion gun may be reusable. The introducer **120** is often disposable to avoid the possibility of contamination. Alternatively, the introducer **120** may be sterilized and reused. In addition, the introducer **120** and/or the sensor **42** may be coated with an anticlotting agent to prevent fouling of the sensor **42**.

In one embodiment, the sensor **42** is injected between 2 to 12 mm into the interstitial tissue of the patient for subcutaneous implantation. Preferably, the sensor is injected 3 to 9 mm, and more preferably 5 to 7 mm, into the interstitial tissue. Other embodiments of the invention, may include sensors implanted in other portions of the patient, including, for example, in an artery, vein, or organ. The depth of implantation varies depending on the desired implantation target.

Although the sensor **42** may be inserted anywhere in the body, it is often desirable that the insertion site be positioned so that the on-skin sensor control unit **44** can be concealed. In addition, it is often desirable that the insertion site be at a place on the body with a low density of nerve endings to reduce the pain to the patient. Examples of preferred sites for insertion of the sensor **42** and positioning of the on-skin sensor control unit **44** include the abdomen, thigh, leg, upper arm, and shoulder.

An insertion angle is measured from the plane of the skin (i.e., inserting the sensor perpendicular to the skin would be a 90° insertion angle). Insertion angles usually range from 10 to 90°, typically from 15 to 60°, and often from 30 to 45°.

On-skin Sensor Control Unit

The on-skin sensor control unit **44** is configured to be placed on the skin of a patient. The on-skin sensor control unit **44** is optionally formed in a shape that is comfortable to the patient and which may permit concealment, for example, under a patient's clothing. The thigh, leg, upper arm, shoulder, or abdomen are convenient parts of the patient's body for placement of the on-skin sensor control unit **44** to maintain concealment. However, the on-skin sensor control unit **44** may be positioned on other portions of the patient's body. One embodiment of the on-skin sensor control unit **44** has a thin, oval shape to enhance concealment, as illustrated in FIGS. **5**-**7**. However, other shapes and sizes may be used.

The particular profile, as well as the height, width, length, weight, and volume of the on-skin sensor control unit **44** may vary and depends, at least in part, on the components and associated functions included in the on-skin sensor control unit **44**, as discussed below. For example, in some embodiments, the on-skin sensor control unit **44** has a height of 1.3 cm or less, and preferably 0.7 cm or less. In some embodiments, the on-skin sensor control unit **44** has a weight of 90 grams or less, preferably 45 grams or less, and more preferably 25 grams or less. In some embodiments, the on-skin sensor control unit **44** has a volume of about 15 cm^3 or less, preferably about 10 cm^3 or less, more preferably about 5 cm^3 or less, and most preferably about 2.5 cm^3 or less.

The on-skin sensor control unit **44** includes a housing **45**, as illustrated in FIGS. **5**-**7**. The housing **45** is typically formed as a single integral unit that rests on the skin of the patient. The housing **45** typically contains most or all of the electronic components, described below, of the on-skin

sensor control unit **44**. The on-skin sensor control unit **44** usually includes no additional cables or wires to other electronic components or other devices. If the housing includes two or more parts, then those parts typically fit together to form a single integral unit.

In some embodiments, conductive contacts **80** are provided on the exterior of the housing **45**. In other embodiments, the conductive contacts **80** are provided on the interior of the housing **45**, for example, within a hollow or recessed region.

In some embodiments, the housing **45** of the on-skin sensor control unit **44** is a single piece. The conductive contacts **80** may be formed on the exterior of the housing **45** or on the interior of the housing **45** provided there is a port **78** in the housing **45** through which the sensor **42** can be directed to access the conductive contacts **80**.

In other embodiments, the housing **45** of the on-skin sensor control unit **44** is formed in at least two separate portions that fit together to form the housing **45**, for example, a base **74** and a cover **76**, as illustrated in FIGS. **5**-**7**. The two or more portions of the housing **45** may be entirely separate from each other. Alternatively, at least some of the two or more portions of the housing **45** may be connected together, for example, by a hinge, to facilitate the coupling of the portions to form the housing **45** of the on-skin sensor control unit **44**.

These two or more separate portions of the housing **45** of the on-skin sensor control unit **44** may have complementary, interlocking structures, such as, for example, interlocking ridges or a ridge on one component and a complementary groove on another component, so that the two or more separate components may be easily and/or firmly coupled together. This may be useful, particularly if the components are taken apart and fit together occasionally, for example, when a battery or sensor **42** is replaced. However, other fasteners may also be used to couple the two or more components together, including, for example, screws, nuts and bolts, nails, staples, rivets, or the like. In addition, adhesives, both permanent or temporary, may be used including, for example, contact adhesives, pressure sensitive adhesives, glues, epoxies, adhesive resins, and the like.

Typically, the housing **45** is at least water resistant to prevent the flow of fluids into contact with the components in the housing, including, for example, the conductive contacts **80**. Preferably, the housing is waterproof. In one embodiment, two or more components of the housing **45**, for example, the base **74** and the cover **76**, fit together tightly to form a hermetic, waterproof, or water resistant seal so that fluids can not flow into the interior of the on-skin sensor control unit **44**. This may be useful to avoid corrosion currents and/or degradation of items within the on-skin sensor control unit **44**, such as the conductive contacts, the battery, or the electronic components, particularly when the patient engages in such activities as showering, bathing, or swimming.

Water resistant, as used herein, means that there is no penetration of water through a water resistant seal or housing when immersed in water at a depth of one meter at sea level. Waterproof, as used herein, means that there is no penetration of water through the waterproof seal or housing when immersed in water at a depth of ten meters, and preferably fifty meters, at sea level. It is often desirable that the electronic circuitry, power supply (e.g., battery), and conductive contacts of the on-skin sensor control unit, as well as the contact pads of the sensor, are contained in a water resistant, and preferably, a waterproof, environment.

The on-skin sensor control unit **44** is typically attached to the skin **75** of the patient, as illustrated in FIG. **8**. The on-skin sensor control unit **44** may be attached by a variety of techniques including, for example, by adhering the on-skin sensor control unit **44** directly to the skin **75** of the patient with an adhesive provided on at least a portion of the housing **45** of the on-skin sensor control unit **44** which contacts the skin **75**, by suturing the on-skin sensor control unit **44** to the skin **75** through suture openings (not shown) in the sensor control unit **44**, or by strapping the on-skin sensor control unit **44** to the skin **75**.

Another method of attaching the housing **45** of the on-skin sensor control unit **44** to the skin **75** includes using a mounting unit, **77**. The mounting unit **77** is often a part of the on-skin sensor control unit **44**. One example of a suitable mounting unit **77** is a double-sided adhesive strip, one side of which is adhered to a surface of the skin of the patient and the other side is adhered to the on-skin sensor control unit **44**. In this embodiment, the mounting unit **77** may have an optional opening **79** which is large enough to allow insertion of the sensor **42** through the opening **79**. Alternatively, the sensor may be inserted through a thin adhesive and into the skin.

A variety of adhesives may be used to adhere the on-skin sensor control unit **44** to the skin **75** of the patient, either directly or using the mounting unit **77**, including, for example, pressure sensitive adhesives (PSA) or contact adhesives. Preferably, an adhesive is chosen which is not irritating to all or a majority of patients for at least the period of time that a particular sensor **42** is implanted in the patient. Alternatively, a second adhesive or other skin-protecting compound may be included with the mounting unit so that a patient, whose skin is irritated by the adhesive on the mounting unit **77**, can cover his skin with the second adhesive or other skin-protecting compound and then place the mounting unit **77** over the second adhesive or other skin-protecting compound. This should substantially prevent the irritation of the skin of the patient because the adhesive on the mounting unit **77** is no longer in contact with the skin, but is instead in contact with the second adhesive or other skin-protecting compound.

Returning to FIG. **8**, when the sensor **42** is changed, the on-skin sensor control unit **44** may be moved to a different position on the skin **75** of the patient, for example, to avoid excessive irritation. Alternatively, the on-skin sensor control unit **44** may remain at the same place on the skin of the patient until it is determined that the unit **44** should be moved.

Another embodiment of a mounting unit **77** used in an on-skin sensor control unit **44** is illustrated in FIGS. **10**A and **10**B. The mounting unit **77** and a housing **45** of an on-skin sensor control unit **44** are mounted together in, for example, an interlocking manner, as shown in FIG. **10**A. The mounting unit **77** is formed, for example, using plastic or polymer materials, including, for example, polyvinyl chloride, polyethylene, polypropylene, polystyrene, ABS polymers, and copolymers thereof. The mounting unit **77** may be formed using a variety of techniques including, for example, injection molding, compression molding, casting, and other molding methods.

The mounting unit **77** typically includes an adhesive on a bottom surface of the mounting unit **77** to adhere to the skin of the patient or the mounting unit **77** is used in conjunction with, for example, double-sided adhesive tape or the like. The mounting unit **77** typically includes an opening **79** through which the sensor **42** is inserted, as shown in FIG. **10**B. The mounting unit **77** may also include a support

structure **220** for holding the sensor **42** in place and against the conductive contacts **80** on the on-skin sensor control unit **42**. The mounting unit **77**, also, optionally, includes a positioning structure **222**, such as an extension of material from the mounting unit **77**, that corresponds to a structure (not shown), such as an opening, on the sensor **42** to facilitate proper positioning of the sensor **42**, for example, by aligning the two complementary structures.

In another embodiment, a coupled mounting unit **77** and housing **45** of an on-skin sensor control unit **44** is provided on an adhesive patch **204** with an optional cover **206** to protect and/or confine the housing **45** of the on-skin sensor control unit **44**, as illustrated in FIG. **11**A. The optional cover may contain an adhesive or other mechanism for attachment to the housing **45** and/or mounting unit **77**. The mounting unit **77** typically includes an opening **49** through which a sensor **42** is disposed, as shown in FIG. **11**B. The opening **49** may optionally be configured to allow insertion of the sensor **42** through the opening **49** using an introducer **120** or insertion gun **200** (see FIG. **9**). The housing **45** of the on-skin sensor control unit **44** has a base **74** and a cover **76**, as illustrated in FIG. **11**C. A bottom view of the housing **45**, as shown in FIG. **11**D, illustrates ports **230** through which conductive contacts (not shown) extend to connect with contact pads on the sensor **42**. A board **232** for attachment of circuit components may optionally be provided within the on-skin sensor control unit **44**, as illustrated in FIG. **1**E.

In some embodiments, the adhesive on the on-skin sensor control unit **44** and/or on any of the embodiments of the mounting unit **77** is water resistant or waterproof to permit activities such as showering and/or bathing while maintaining adherence of the on-skin sensor control unit **44** to the skin **75** of the patient and, at least in some embodiments, preventing water from penetrating into the sensor control unit **44**. The use of a water resistant or waterproof adhesive combined with a water resistant or waterproof housing **45** protects the components in the sensor control unit **44** and the contact between the conductive contacts **80** and the sensor **42** from damage or corrosion. An example of a non-irritating adhesive that repels water is Tegaderm (3M, St. Paul, Minn.).

In one embodiment, the on-skin sensor control unit **44** includes a sensor port **78** through which the sensor **42** enters the subcutaneous tissue of the patient, as shown in FIGS. **5** to **7**. The sensor **42** may be inserted into the subcutaneous tissue of the patient through the sensor port **78**. The on-skin sensor control unit **44** may then be placed on the skin of the patient with the sensor **42** being threaded through the sensor port **78**. If the housing **45** of the sensor **42** has, for example, a base **74** and a cover **76**, then the cover **76** may be removed to allow the patient to guide the sensor **42** into the proper position for contact with the conductive contacts **80**.

Alternatively, if the conductive contacts **80** are within the housing **45** the patient may slide the sensor **42** into the housing **45** until contact is made between the contact pads **49** and the conductive contacts **80**. The sensor control unit **44** may have a structure which obstructs the sliding of the sensor **42** further into the housing once the sensor **42** is properly positioned with the contact pads **49** in contact with the conductive contacts **80**.

In other embodiments, the conductive contacts **80** are on the exterior of the housing **45** (see e.g., FIGS. **10**A-**10**B and **11**A-**11**E). In these embodiments, the patient guides the contacts pads **49** of the sensor **42** into contact with the conductive contacts **80**. In some cases, a guiding structure may be provided on the housing **45** which guides the sensor **42** into the proper position. An example of such a structure includes a set of guiding rails extending from the housing **45** and having the shape of the sensor **42**.

In some embodiments, when the sensor **42** is inserted using an introducer **120** (see FIG. **3**), the tip of the introducer **120** or optional insertion gun **200** (see FIG. **9**) is positioned against the skin or the mounting unit **77** at the desired insertion point. In some embodiments, the introducer **120** is positioned on the skin without any guide. In other embodiments, the introducer **120** or insertion gun **200** is positioned using guides (not shown) in the mounting unit **77** or other portion of the on-skin sensor control unit **44**. In some embodiments, the guides, opening **79** in the mounting unit **77** and/or sensor port **78** in the housing **45** of the on-skin sensor control unit **44** have a shape which is complementary to the shape of the tip of the introducer **120** and/or insertion gun **200** to limit the orientation of the introducer **120** and/or insertion gun **200** relative to the opening **79** and/or sensor port **78**. The sensor can then be subcutaneously inserted into the patient by matching the complementary shape of the opening **79** or sensor port **78** with the introducer **120** and/or insertion gun **200**.

In some embodiments, the shapes of a) the guides, opening **79**, or sensor port **78**, and (b) the introducer **120** or insertion gun **200** are configured such that the two shapes can only be matched in a single orientation. This aids in inserting the sensor **42** in the same orientation each time a new sensor is inserted into the patient. This uniformity in insertion orientation may be required in some embodiments to ensure that the contact pads **49** on the sensor **42** are correctly aligned with appropriate conductive contacts **80** on the on-skin sensor control unit **44**. In addition, the use of the insertion gun, as described above, may ensure that the sensor **42** is inserted at a uniform, reproducible depth.

An exemplary on-skin sensor control unit **44** can be prepared and used in the following manner. A mounting unit **77** having adhesive on the bottom is applied to the skin. An insertion gun **200** (see FIG. **9**) carrying the sensor **42** and the introducer **120** is positioned against the mounting unit **77**. The insertion gun **200** and mounting unit **77** are optionally designed such that there is only one position in which the two properly mate. The insertion gun **200** is activated and a portion of the sensor **42** and optionally a portion of the introducer **120** are driven through the skin into, for example, the subcutaneous tissue. The insertion gun **200** withdraws the introducer **120**, leaving the portion of the sensor **42** inserted through the skin. The housing **45** of the on-skin control unit **44** is then coupled to the mounting unit **77**. Optionally, the housing **45** and the mounting unit **77** are formed such that there is only one position in which the two properly mate. The mating of the housing **45** and the mounting unit **77** establishes contact between the contact pads **49** (see e.g., FIG. **2**) on the sensor **42** and the conductive contacts **80** on the on-skin sensor control unit **44**. Optionally, this action activates the on-skin sensor control unit **44** to begin operation.

The introducer, sensor, insertion gun and mounting unit can be manufactured, marketed, or sold as a unit. For example, FIG. **12** depicts an introducer **270**, sensor **272**, insertion gun **274** and mounting unit **276**, which can be assembled (as indicated by the arrows) and sold together in an insertion kit. In such an embodiment of an insertion kit, the insertion gun **274** can be packaged in a pre-loaded fashion, with an introducer **270** and sensor **272** mated or otherwise coupled, the mated sensor **272** and introducer **270** loaded upon the carrier **278** of the insertion gun, and with a mounting unit **276** already mated with the end of the insertion gun **274**.

In one embodiment, the insertion gun **274** is packaged in a state where it is ready to thrust the sensor **272** (and perhaps introducer **270**) into subcutaneous tissue. For example, the insertion gun **274** can be packaged in a "cocked" state, such that the thrusting force used to introduce the sensor **272** into the subcutaneous tissue is stored in the device as potential energy (in the case of the embodiment depicted in FIG. **12**, the insertion gun **274** would be "cocked" by compressing its spring **280**, thus storing potential energy within the coils of the spring). Preferably, an insertion gun **274** packaged in such a manner employs a "safety", a barrier to prevent the release of the stored potential energy. The barrier is removed in order to permit the potential energy to be released. Within the context of the embodiment presented in FIG. **12**, an example of a safety is a pin (not pictured) that impedes the spring from expanding, once compressed. Thus, an insertion kit so embodied can be obtained at a place of purchase, removed from its package, and used after removal of the safety, without necessitating additional steps. Alternatively, the insertion gun **274** can be packaged in the above-described pre-loaded configuration, but without being "cocked". Thus, an insertion kit with an "uncocked" insertion gun **274** can be obtained at a place of purchase, removed from its package, cocked, and used. To facilitate the insertion kit being ready to use with minimal user-exercised steps, the insertion kit can be sterilized prior to packaging. Examples of acceptable sterilizing techniques include exposing the elements of the insertion kit to gamma radiation or an e-beam.

Referring to FIGS. **13-33**, preferred commercial embodiments of a sensor inserter constructed according to the invention will now be described. FIG. **13** shows an overall perspective view of a sensor inserter kit **300** comprising a single-use sensor inserter **310** and a single-use adhesive mount **312** removably attached to the bottom thereof.

As an overview of the operation of inserter kit **300**, the kit comes packaged generally as shown in FIG. **13** with a sensor **314** (best seen in FIGS. **16** and **25**) preloaded within inserter **310** and with inserter **310** in a "cocked" state. After preparing an insertion site on the skin, typically in the abdominal region, the patient removes upper liner **316** and lower liner **318** from adhesive mount **312** to expose the bottom surface and a portion of the top surface of an adhesive tape **320** (best seen in FIG. **16**) located beneath mount **312**. Mount **312**, with inserter **310** attached, is then applied to the patient's skin at the insertion site. Safety lock tabs **322** are squeezed together to allow actuator button **324** to be pressed causing inserter **310** to fire, thereby inserting sensor **314** into the patient's skin with a predetermined velocity and force. Once sensor **314** has been inserted into the skin, the patient removes inserter **310** from mount **312** by pressing release tabs **326** on opposite sides of inserter **310** and lifting inserter **310** away from mount **312**.

Referring to FIG. **14**, mount **312** is shown adhered to a patient's skin **328** with sensor **314** already inserted. Once inserter **310** is removed from mount **312**, transmitter **330** can be slid into place. The circuitry of transmitter **330** makes electrical contact with the contact pads on sensor **314** after transmitter **330** is fully seated on mount **312**. Once initialization and synchronization procedures are completed, electrochemical measurements from sensor **314** can be sent wirelessly from transmitter **330** to a portable receiver **332**, as shown in FIG. **15**. Sensor **314**, mount **312** and transmitter **330** remain in place on the patient for a predetermined period, currently envisioned to be three days. These components are then removed so that sensor **314** and mount **312** can be properly discarded. The entire procedure above can then be repeated with a new inserter **310**, sensor **314** and mount **312**, reusing transmitter **330** and receiver **332**.

Referring to FIG. **16**, the preferred inserter kit **300** is assembled as shown from the following components: housing **334**, actuator button **324**, drive spring **336**, shuttle **338**, introducer sharp **340**, sensor **314**, retraction spring **342**, inserter base **344**, upper liner **316**, adhesive mount **312**, adhesive tape **320**, and lower liner **318**.

Sensor **314** has a main surface **346** slidably mounted between U-shaped rails **348** of introducer sharp **340** and releasably retained there by sensor dimple **350** which engages introducer dimple **352**. Introducer sharp **340** is mounted to face **354** of shuttle **338**, such as with adhesive, heat stake or ultrasonic weld. Sensor **314** also has a surface **356** that extends orthogonally from main surface **346** and just beneath a driving surface **358** of shuttle **338** when mounted thereon (details of these features are better shown in FIGS. **19** and **25-27**.)

Shuttle **338** is slidably and non-rotatably constrained on base **344** by arcuate guides **360**. As best seen in FIGS. **19**, **24** and **27**, shuttle **338** is generally formed by an outer ring **362** and an inner cup-shaped post **364** connected by two bridges **366**. Bridges **366** slide between the two slots **368** formed between guides **360** and allow shuttle **338** to travel along guides **360** without rotating. Retraction spring **342** is captivated at its outer circumference by guides **360**, at its bottom by the floor **370** of base **344**, at its top by bridges **366**, and at its inner circumference by the outer surface of shuttle post **364**. Drive spring **336** is captivated at its bottom and outer circumference by the inside surface of shuttle post **364**, at its top by the ceiling **372** inside actuator button **324**, and at its inner circumference by stem **374** depending from ceiling **372**. When drive spring **336** is compressed between actuator button **324** and shuttle **338** it urges shuttle **338** towards base **344**. When retraction spring **342** is compressed between shuttle **338** and base **344**, it urges shuttle **338** towards actuator button **324**.

Actuator button **324** is slidably received within housing **334** from below and resides in opening **376** at the top of housing **334** with limited longitudinal movement. Arms **378** on each side of actuator button **324** travel in channels **380** along the inside walls of housing **334**, as best seen in FIG. **20**. Longitudinal movement of actuator button **324** is limited in one direction by the base **378** of arms **378** contacting the edge of opening **376** at the top of housing **334**, and in the other direction by the distal ends **384** of arms **378** contacting stops **386** in channels **380**. Slots **388** are preferably provided in the top of housing **334** for ease of housing manufacture and so tools can be inserted to inwardly compress arms **378** beyond stops **386** to allow actuator button **324** to be removed from housing **334** if needed.

When sensor **314**, introducer **340**, shuttle **338**, retraction spring **342**, drive spring **336** and actuator button **324** are assembled between base **344** and housing **334** as shown in FIG. **16** and described above, housing **334** is snapped into place on base **344**. Base **344** is held onto housing **334** by upper base barbs **390** that engage upper openings **392** in housing **334**, and lower base barbs **394** (best seen in FIG. **17**) that engage lower openings **396** in housing **334**. Slots **398** and **400** are provided for ease of manufacture of housing **334**, and base **344** is preferably removable from housing **334** with tools if needed.

Referring to FIG. **19**, actuator button **324** is preferably provided with safety lock tabs **322** hingedly formed on opposite ends. Tabs **322** can be urged from a relaxed outward position to a flexed inward position. When in the normal outward position, shoulders **402** on the outer sur-

faces of tabs **322** engage the rim **404** of opening **376** to prevent the actuator button **324** from being depressed, thereby avoiding accidental firing of inserter **310**. Tabs **322** can be squeezed inward just enough to clear the rim **404** of opening **376** while pressing the actuator button **324** down to fire the inserter. Alternatively, tabs **322** can be squeezed further inward so that barbs **406** on the inside edges can engage catches **408** located on a center portion of actuator button **324**, thereby defeating the safety lock to allow later firing by simply pressing down on the actuator button **324**. Preferably, upwardly extending grips **410** are provided on tabs **322** for better visual indication of safety lock status and actuation control.

Referring to FIG. **20**, shuttle **338** is provided with laterally extending barbed fingers **412** which travel in channels **380** along the inside walls of housing **334**. When shuttle **338** is inserted up into housing **334** far enough, barbed fingers **412** momentarily deflect inward and then snap outward again to catch on stops **386**. In this "cocked" position as shown, drive spring **336** is compressed and urging shuttle **338** towards base **344**, but barbed fingers **412** catching on stops **386** prevent such travel.

Referring to FIGS. **21-23**, the sequence of loading, cocking, arming, firing, and automatic retraction of inserter **310** will be described. It is envisioned that in production, inserters **310** will be fabricated and fully assembled by one vender except for sensor **314**, which will be supplied and installed by a second vendor in a sterile environment. Accordingly, inserter **310** will be manufactured and shipped to the sensor vendor in a neutral state, as shown in FIG. **21**. A hole **414** provided through the center of actuator button **324** allows the sensor vendor to insert a pin (manually or by automated machinery, not shown) through hole **414** to drive shuttle **338** towards base **344** in a controlled fashion and hold it there against the force of retraction spring **342**. This will cause introducer sharp **340** to be extended through base **344** (as shown in FIG. **23**) so that sensor **314** can be loaded into introducer **340**. When the pin is removed, shuttle **338**, introducer **340** and sensor **314** will retract to the neutral position. The sensor vendor can then cock the loaded inserter **310** before shipment by pushing another pin (not shown) from the opposite direction through a central hole **416** in base **344** (with mount **312** removed) until the pin contacts dimple **418** formed in the bottom of shuttle **338**. By pushing shuttle **338** towards actuator button **324** until barbed fingers **412** clear stops **386**, the inserter **310** is cocked (as shown in FIG. **22**.)

Referring to FIG. **22**, inserter **310** is preferably received by the patient in the cocked position as shown. To use inserter **310**, the patient applies mount **312** to the mounting site and disables the safety mechanism as previously described, and then pushes actuator button **324** against the force of drive spring **336**. As actuator button **324** travels toward base **344**, drive cam surfaces **420** on arms **378** contact ramped surfaces **422** of barbed fingers **412** and urge them inward. When fingers **412** are driven inward enough to clear stops **386**, shuttle **338** is driven by drive spring **336** with a predetermined speed and force to an insertion position, as shown in FIG. **23**.

Referring to FIG. **23**, inserter **310** is shown in the insertion position with the tail **424** of introducer sharp **340** extending through base **344** and mount **312** into the skin of the patient. FIG. **23** shows shuttle **338** in a fully extended position with its lower surface **426** bottomed out on base **344**. However, the lower orthogonal surface **356** of sensor **314** will contact an exposed sensor contact portion **428** (best seen in FIGS. **14** and **16**) on top of adhesive tape **320** supported from below by the patient's skin, and therefore will typically stop traveling before reaching the fully bottomed out position shown. Tail **424** of introducer sharp **340** provides rigidity and a skin piercing edge **430** for allowing the flexible tail **431** of sensor **314** to be implanted in the patient's skin. After providing this function, introducer sharp **340** is immediately removed from the patient and retracted into a safe position inside housing **334** as retraction spring **342** (which has been compressed by the travel of the shuttle) pushes shuttle **338** back towards actuator cap. Sensor **314** is pulled from introducer **340** and held in place by the sensor contact portion **428** on top of adhesive tape **320** adhering to orthogonal surface **356** of sensor **314**. The geometries of sensor dimple **350** and mating introducer dimple **352** are chosen to create a separation force between them that is less than the adhesion force of tape **320** on orthogonal surface **356**, but great enough to retain sensor **314** in introducer **340** during typical shipping and product handling shock loads. Driving surface **358** beneath shuttle **338** presses down on top of orthogonal surface **356** to ensure good contact with adhesive tape **320** before shuttle **338** retracts with introducer **340**. As discussed above with previous embodiments, barb(s) on sensor tail **431** can be employed to further anchor the sensor in its operating position.

Referring again to FIG. **21**, retraction spring **342** will return shuttle **338** to the neutral position as shown after firing, but without sensor **314** which remains inserted in patient's skin (not still in introducer **340** as shown here.) Drive spring **336** is preferably designed to be stiffer than retraction spring **342** so that shuttle **338** oscillations are quickly dampened out, and so introducer sharp **340** does not return to sensor **314** or the patient to cause injury. With sensor **314** now inserted in the patient's skin, inserter **310** can be removed from mount **312** by inwardly flexing release tabs **326** on opposite sides of inserter **310** to remove latch hooks **432** from mount channels **434** and then lifting inserter **310** away from mount **312**. Introducer sharp **340** remains protected inside housing **334** during disposal of inserter **310**. Transmitter **330** can now be slid into place on mount **312** as previously described.

Referring to FIG. **28**, an alternative embodiment of adhesive tape **320'** is shown. This oversized tape **320'** has the advantage of holding transmitter **330** in place even when fairly large forces are placed on it. In this embodiment adhesive tape **320'** has a double-sided portion **436** (adhesive on both top and bottom sides) residing between mount **312** and the patient's skin, and a single-sided portion **438** outwardly extending from the double-sided portion **436**, preferably in all directions, for adhering just to the patient's skin. In the previous embodiment, it is difficult to separate mount **312** from the skin merely with tension forces, but applying a force to just one side of mount **312** results in a high peeling force being applied to that edge of the adhesive tape **320** which causes tape **320** to peel off of the skin. In contrast, any force applied to transmitter **330** in this alternative embodiment results in a tension force rather than a peeling force being applied to tape **320'**, inhibiting inadvertent removal until an edge of tape **320'** is intentionally peeled up. Preferably, single-sided portion **438** has a width roughly double the width of double-sided portion **436**. In the preferred embodiment, theses widths are 2.14 and 1.14 inches, respectively. Preferably, the length that single-sided portion **438** extends beyond double-sided portion **436** is roughly equivalent to the combined height of transmitter **330** attached to mount **312**, in this case about 0.5 inches.

In the preferred embodiment, sensor **314** is made from a 0.005 inch thick Mylar substrate, such as Dupont Melinex

ST-505, print treated both sides, heat stabilized and biaxially oriented. Main surface **346** is 0.315 tall by 0.512 wide, and orthogonal surface **356** is 0.374 wide by 0.202 deep. Sensor tail **431** is 0.230 long by 0.023 wide. Semispherical sensor dimple **350** is 0.050 inches wide and 0.026 inches deep. Introducer **340** is made from SUS **301** medical grade stainless steel, 0.004 inches thick, having a surface roughness less than or equal to 0.5 micrometers. The height of the main portion of introducer **340** is 0.614 inches, and the inside width is 0.513 inches. The overall thickness of rolled rails **348** is 0.026 inches. The length and width of introducer tail **424** are 0.354 and 0.036 inches, respectively. The preferred angle of the sharp **340** is 21 degrees. Preferably, semispherical introducer dimple **352** has a radius of 0.024 inches. In the preferred embodiment, shuttle **338** has an average speed of at least 1 meter/second, and has a momentum at its end of travel of about 2.65 lb-m/sec.

Preferably, housing **334**, button **324**, shuttle **338**, base **344** and mount **312** are all injection molded from G.E. Lexan PC. Inside and outside working surfaces of arms **378** on button **324** are preferably lubricated with Dow Corning 360 Medical Fluid. Drive spring **336** has a free length of 1.25 inches, a working length of 1.00 inch, and a rate between 20 and 30 pounds per inch. Retraction spring **342** has a free length of 1.5 inches, a working length of 0.35 inches, and a rate between 0.15 and 0.35 pounds per inch. Adhesive tape **320** preferably is medical grade acrylic adhesive on polyester film (such as Acutek **0396013**) with a semi-bleached kraft liner having silicon release.

Referring to FIG. **29**, an interconnect **440** is shown for providing waterproof electrical connections between sensor **314** and transmitter **330**. Interconnect **440** includes a seal **442** mounted on an end of transmitter **330** that contacts one side of sensor **314** when transmitter **330** is slid onto mount **312**. When transmitter **330** is locked into place on mount **312**, seal **442** is compressed between transmitter **330** and sensor **314** and urges sensor **314** against raised end stop **444** of mount **312**.

Referring to FIG. **30**, further details of interconnect **440** are shown. Seal **442** has an exterior wall **446** for surrounding electrical contacts **448** (in this case four), and interior walls **450** for isolating electrical contacts **448** from each other. Rim **452** formed on the transmitter housing **330** surrounds the base **454** of seal **442** to prevent it from collapsing outward when compressed.

Referring to FIG. **31**, an enlarged partial view of FIG. **30** is shown with seal **442** and one spring removed for clarity. Electrical contacts **448** are preferably constructed from compression springs **456** mounted on connector lugs **458**. Lugs **458** are stamped rearward on their edges to form protrusions **460** that retain springs **456**. Alternately or in conjunction with this stamping, plastic rings (not shown) can be melted over the base of each spring **456** for attaching it to its respective lug **458**. Connector lugs **458** can protrude through slots in transmitter housing **330**, or be insert molded integral with the plastic housing **330** when it is molded.

Referring to FIG. **32**, and enlarged perspective view of the seal **442** is shown. It has been discovered through experimentation that two lips **462** of equal height along the distal edge of exterior wall **446** provide the best seal from exterior elements. Good isolation between electrical contacts **448** is best achieved by having interior walls **450** with a height equal to that of lips **462**. Recesses **464** should be sized large enough so that seal **442** does not interfere with the movement of springs **456** when seal **442** and springs **456** are compressed. In the preferred embodiment, the distal face of seal **442** defined by lips **462** is formed at a 1 degree angle to match the draft angle of mount end stop **444**.

Seal **442** is preferably made of shore A 30 durometer compression molded silicone. It is envisioned that seal **442** can be shortened in the axial direction (parallel to springs **456**) to reduce the force required to compress it when attaching transmitter **330** to mount **312**. Best results for fastening seal **442** to transmitter housing **330** have been achieved with double sided adhesive tape **320**, silicone adhesive on one side and acrylic adhesive on the other for sticking to the PC-ABS blend of the transmitter housing **330**, such as product number 9731 manufactured by 3M Company of St. Paul, Minn. Springs **456** are preferably made from gold-plated beryllium copper so as to deter galvanic current effects. Preferably, main surface **346** of sensor **314** that contacts seal **442** has a uniform thickness dielectric coating with a window in it (i.e. no dielectric) where springs **456** contact sensor **314**. An interconnect **440** constructed as described above remains water proof when submerged to a depth of at least 1 meter for 45 minutes.

To increase the reliability of sensor insertion, the following enhancements can be added to the inserter kit **300** described above. First, a sensor flap **466**, as shown in FIG. **25**, can be formed along the top edge of sensor **314**. When sensor **314** reaches the extended, delivered position as shown in FIG. **23**, flap **466** catches on bottom edge **468** of base **344**, shown in FIG. **19**, to ensure that sensor **314** separates from introducer **340** as shuttle **338** returns upward to the retracted position. Adhesive can also be located on the bottom of orthogonal sensor surface **356** to ensure that sensor **314** adheres to the sensor contact portion **428** on the top of adhesive mount tape **320**, as shown in FIG. **16**.

Referring to FIGS. **33**A and **33**B, actuator button **324'** can be made easier for elderly patients to push by anchoring the upper end of drive spring **336** on a housing bridge **470** instead of button **324**. This change also makes the insertion force of inserter **310** more consistent, and allows stronger spring forces to be used if desired. Bridge **470** spans across opening **376'** and divides it into two openings **472** in the top of housing **334'**. The top portion of button **324'** is bifurcated into two protrusions **474** that each extend through an opening **472**. A clearance hole (not shown) is provided through the center of button **324'** to allow drive spring **336** to pass through and secure around a post (not shown) depending from the bottom center of bridge **470**.

Safety lock key **476** can be provided to prevent actuator button **324'** from being pressed until key **476** is removed. Aperture **478** is provided in the top center of bridge **470** for receiving boss **480** located at the bottom of key **476**, thereby allowing key **476** to rotate. When key handle **482** is rotated perpendicular to button protrusions **474** as shown, two opposing perpendicular fins **484** on key **476** swing into inwardly facing slots (not shown) on the inside of protrusions **474** and prevent button **324'** from being actuated. When key handle **482** and fins **484** are rotated parallel to button protrusions **474** such that fins **484** disengage therefrom, key **476** can be removed and button **324'** can then be actuated. Other than these modifications, this inserter kit **300'** functions the same as the embodiment previous described.

To provide an easier and more consistent release of shuttle **338** by actuator button **324** or **324'**, it is envisioned that less aggressive finger engagement with stops **386** can be employed, or the above designs can be modified to have a single, more centrally located shuttle release finger (not shown) instead of the two outboard fingers **412** shown.

The present invention should not be considered limited to the particular examples described above. Various modifications, equivalent processes, as well as numerous structures to which the present invention may be applicable and which fall within the general scope of the invention will be readily apparent to those of skill in the art to which the present invention is directed upon review of the instant specification.

The invention claimed is:

1. A sensor inserter assembly comprising:

a housing;

a shuttle movably connected to the housing, the shuttle movable in an insertion direction and an opposite retraction direction;

a first spring means for urging the shuttle in the insertion direction;

a second spring means for urging the shuttle in the retraction direction;

a sensor;

an introducer sharp attached to the shuttle, the sensor introducer sharp arranged for releasably receiving the sensor; and

an actuator for releasing the shuttle and allowing the first spring means to urge the shuttle and introducer sharp in the insertion direction to an extended position in which at least a portion of the introducer sharp and the sensor protrude from the housing, whereby the second spring means is automatically actuated by the shuttle reaching the extended position and urges the shuttle and introducer sharp in the retraction direction from the extended position to a retracted position in which the introducer sharp is retracted within the housing, wherein the sensor is slidably received within the introducer sharp and wherein the sensor is releasably retained on the introducer sharp by a dimple located on the sensor.

2. The sensor inserter assembly of claim **1**, wherein the first and second spring means are separate compression springs.

3. The sensor inserter assembly of claim **1**, wherein the first and second spring means are formed from a single structure alternately acting in compression and tension.

4. The sensor inserter assembly of claim **1**, wherein the housing comprises a post for slidably receiving and retaining the shuttle.

5. The sensor inserter assembly of claim **4**, wherein the post and the shuttle comprise inter-engaging features that prevent the shuttle from rotating significantly with respect to the post.

6. The sensor inserter assembly of claim **1**, wherein the device further comprises a safety to impede the actuator until the safety is deactivated.

7. A sensor inserter assembly comprising:

a housing;

a shuttle movably connected to the housing, the shuttle movable in an insertion direction and an opposite retraction direction;

a first spring means for urging the shuttle in the insertion direction;

a second spring means for urging the shuttle in the retraction direction;

a sensor;

an introducer sharp attached to the shuttle, the sensor introducer sharp arranged for releasably receiving a the sensor; and

an actuator for releasing the shuttle and allowing the first spring means to urge the shuttle and introducer sharp in the insertion direction to an extended position in which at least a portion of the introducer sharp and the sensor protrude from the housing, whereby the second spring means is automatically actuated by the shuttle reaching the extended position and urges the shuttle and introducer sharp in the retraction direction from the extended position to a retracted position in which the introducer sharp is retracted within the housing, wherein the sensor is pulled from the introducer sharp by an adhesive member as the shuttle is urged from the extended position to the retracted position.

8. A sensor inserter device comprising:

a housing;

a shuttle movably connected to the housing, the shuttle movable in an insertion direction and an opposite retraction direction;

a first spring means for urging the shuttle in the insertion direction;

a second spring means for urging the shuttle in the retraction direction;

an introducer sharp attached to the shuttle, the introducer sharp arranged for releasably receiving a sensor; and

an actuator for releasing the shuttle and allowing the first spring means to urge the shuttle and introducer sharp in the insertion direction to an extended position in which at least a portion of the introducer sharp and the sensor protrude from the housing, whereby the second spring means is automatically actuated by the shuttle reaching the extended position and urges the shuttle and introducer sharp in the retraction direction from the extended position to a retracted position in which the introducer sharp is retracted within the housing, further comprising an adhesive mount releasably attached to the housing for attaching to a patient's body near an insertion site where the sensor is adapted to be inserted, the adhesive mount comprising a housing portion and an adhesive portion, the adhesive portion extending outwardly beyond the housing portion.

9. The sensor inserter assembly of claim **8**, wherein the adhesive portion has a width generally at least double a width of the housing portion.

10. The sensor inserter assembly of claim **8**, wherein the adhesive portion has at least a region comprised of double-sided adhesive tape.

11. The sensor inserter assembly of claim **8**, wherein the adhesive portion is generally planar and extends outwardly beyond the housing portion in all directions.

12. The sensor inserter assembly of claim **8**, wherein the adhesive portion is flexible.

* * * * *