US007207974B2

(12) **United States Patent**
Safabash et al.

(10) **Patent No.: US 7,207,974 B2**
(45) **Date of Patent: *Apr. 24, 2007**

(54) **INSERTION DEVICE FOR AN INSERTION SET AND METHOD OF USING THE SAME**

(75) Inventors: **Jason H. Safabash**, Los Angeles, CA (US); **Susan M. McConnell**, Woodland Hills, CA (US); **Randy W. Adair**, Valencia, CA (US); **Jeffery V. Funderburk**, Fremont, CA (US); **April A. Marano**, Manhattan, CA (US); **Jeffrey F. Field**, Camarillo, CA (US)

(73) Assignee: **Medtronic MiniMed, Inc.**, Northridge, CA (US)

(*) Notice: Subject to any disclaimer, the term of this patent is extended or adjusted under 35 U.S.C. 154(b) by 700 days.

This patent is subject to a terminal disclaimer.

(21) Appl. No.: **10/370,831**

(22) Filed: **Feb. 21, 2003**

(65) **Prior Publication Data**

US 2003/0130619 A1 Jul. 10, 2003
US 2006/0069351 A9 Mar. 30, 2006

Related U.S. Application Data

(63) Continuation of application No. 09/839,052, filed on Apr. 20, 2001, now Pat. No. 6,607,509, which is a continuation-in-part of application No. 09/215,356, filed on Dec. 18, 1998, now Pat. No. 6,293,925, which is a continuation-in-part of application No. 09/002,303, filed on Dec. 31, 1997, now Pat. No. 6,093,172, which is a continuation-in-part of application No. 08/795,968, filed on Feb. 5, 1997, now Pat. No. 5,851,197.

(51) **Int. Cl.**
A61M 5/20 (2006.01)

(52) **U.S. Cl.** **604/136**; 604/137

(58) **Field of Classification Search** 604/513, 604/93.01, 164.01, 136, 137, 157
See application file for complete search history.

(56) **References Cited**

U.S. PATENT DOCUMENTS

4,685,903 A 8/1987 Cable et al. 604/154

(Continued)

FOREIGN PATENT DOCUMENTS

WO 02081012 10/2002

OTHER PUBLICATIONS

European Search Report, Dated Jul. 20, 2000, 3 pages.

(Continued)

Primary Examiner—Kevin C. Sirmons
Assistant Examiner—Catherine Witczak

(57) **ABSTRACT**

An insertion device for inserting at least a portion of at least one piercing member of an insertion set through the skin of a patient, including: a device housing and a carrier body for movement between an advanced position and a retracted position. The carrier body includes a receiving structure to support the insertion set in a position with the at least one piercing member oriented for insertion through the skin of the patient at a predetermined angle relative to the skin of the patient. A driver urges the carrier body with a controlled force and speed to place at least a portion of the at least one piercing member of the insertion set through the skin of the patient to install the insertion set to the patient. The receiving structure is removable from the insertion set while maintaining installation of the insertion set to the patient.

58 Claims, 25 Drawing Sheets

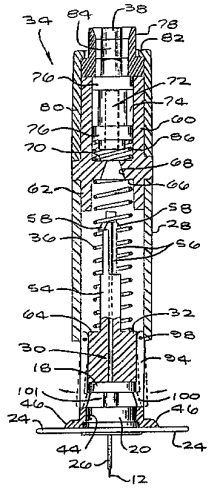

DEXCOM
EXHIBIT 1140

U.S. PATENT DOCUMENTS

4,755,173	A	7/1988	Konopka et al.	604/167
5,122,119	A	6/1992	Lucas	604/135
5,147,375	A	9/1992	Sullivan et al.	606/182
5,176,662	A	1/1993	Bartholomew et al.	604/283
5,257,980	A	11/1993	Van Antwerp et al.	604/282
5,390,671	A	2/1995	Lord et al.	128/635
5,568,806	A	10/1996	Cheney, II et al.	128/635
5,584,813	A	12/1996	Livingston et al.	604/177
5,586,553	A	12/1996	Halili et al.	128/635
5,591,188	A	1/1997	Waisman	606/182
5,779,665	A	7/1998	Mastrototaro et al.	604/51
5,851,197	A	12/1998	Marano et al.	604/135
6,293,925	B1 *	9/2001	Safabash et al.	604/136
6,997,907	B2 *	2/2006	Safabash et al.	604/157

OTHER PUBLICATIONS

PCT International Search Report for International Application No. PCT/US02/10271.

* cited by examiner

FIG. 1

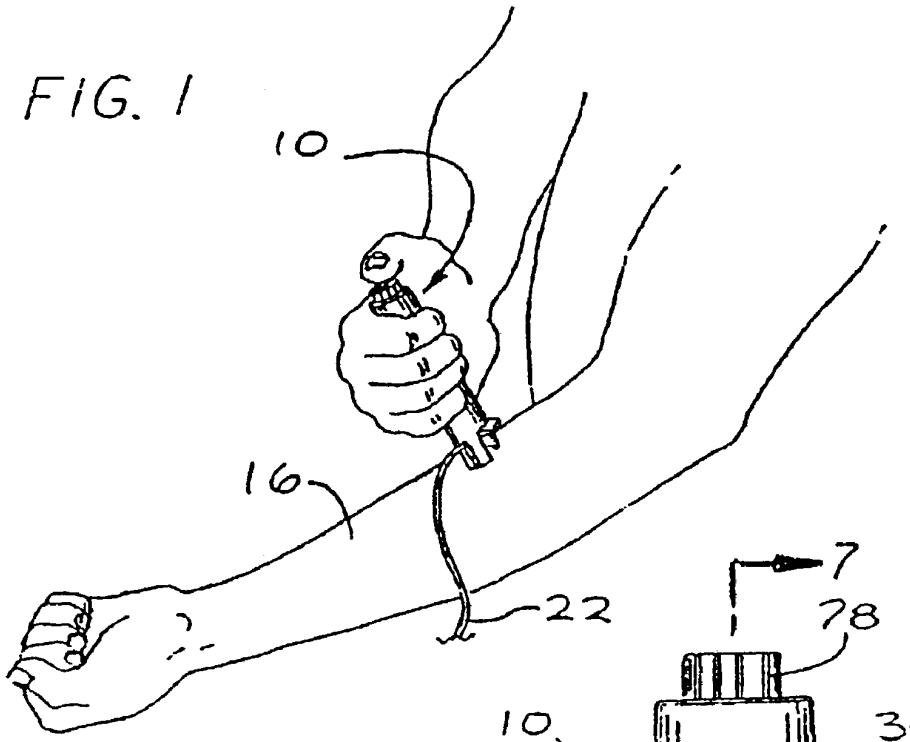

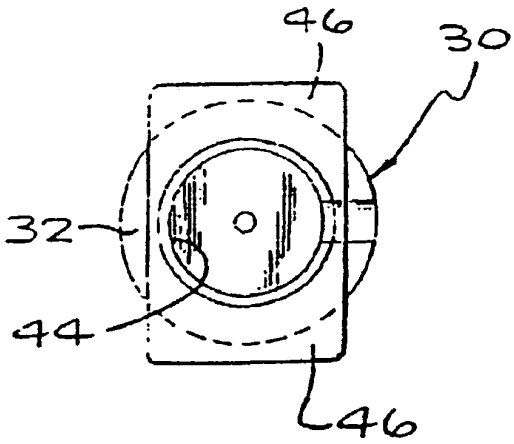

FIG. 3

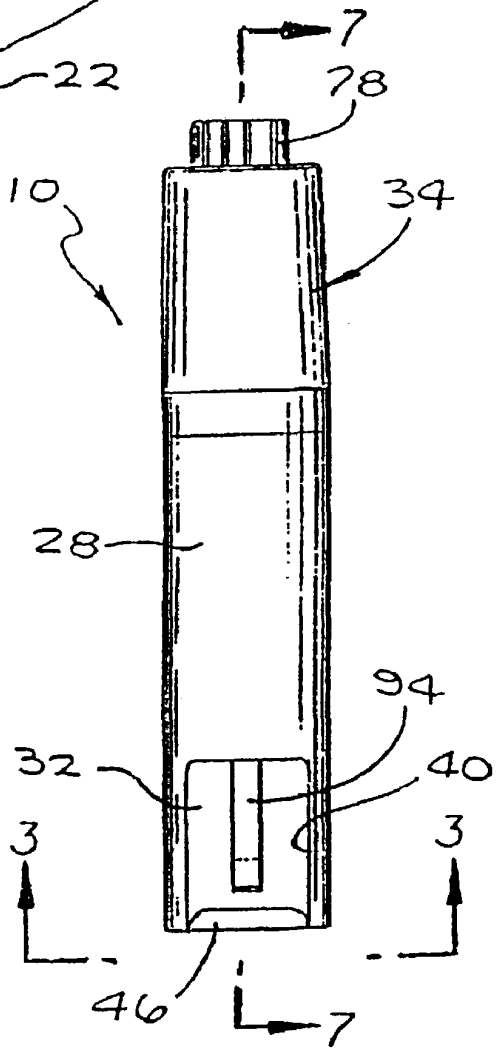

FIG. 2

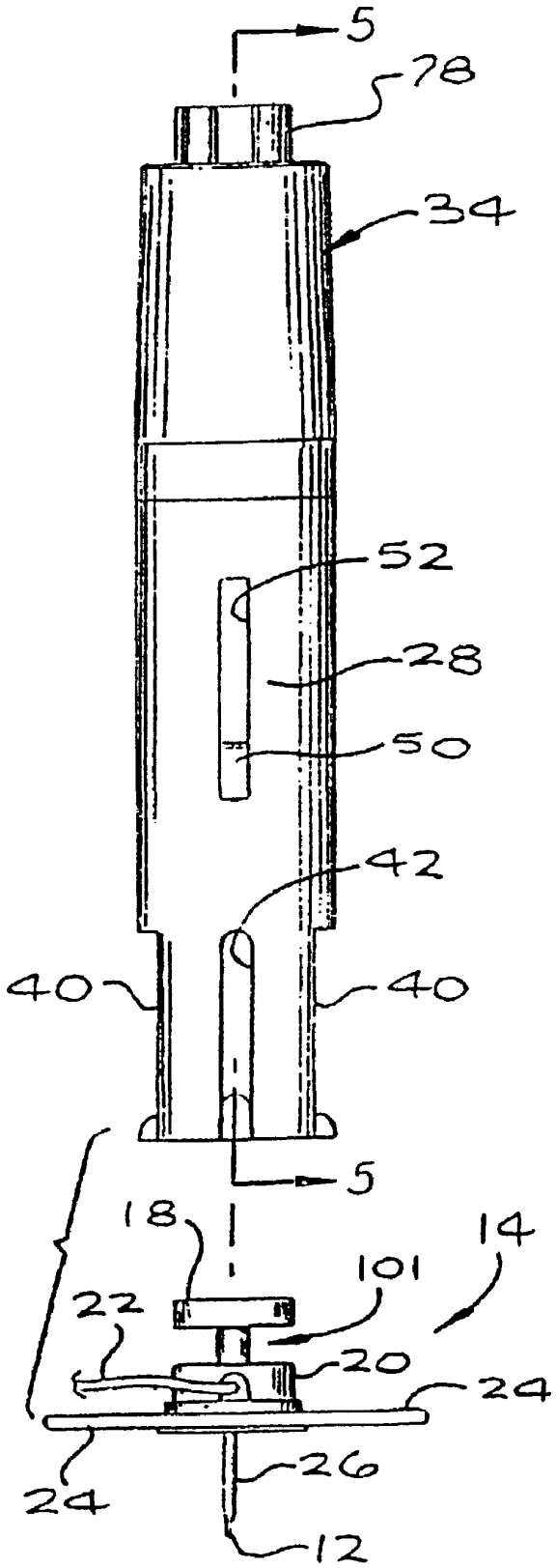

FIG. 4

FIG. 6

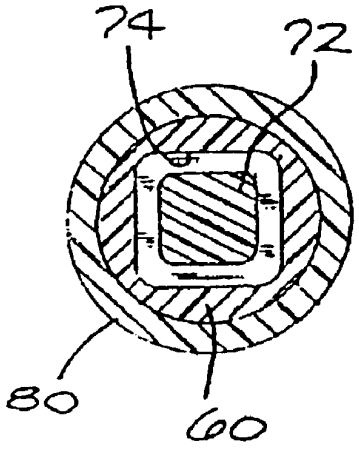

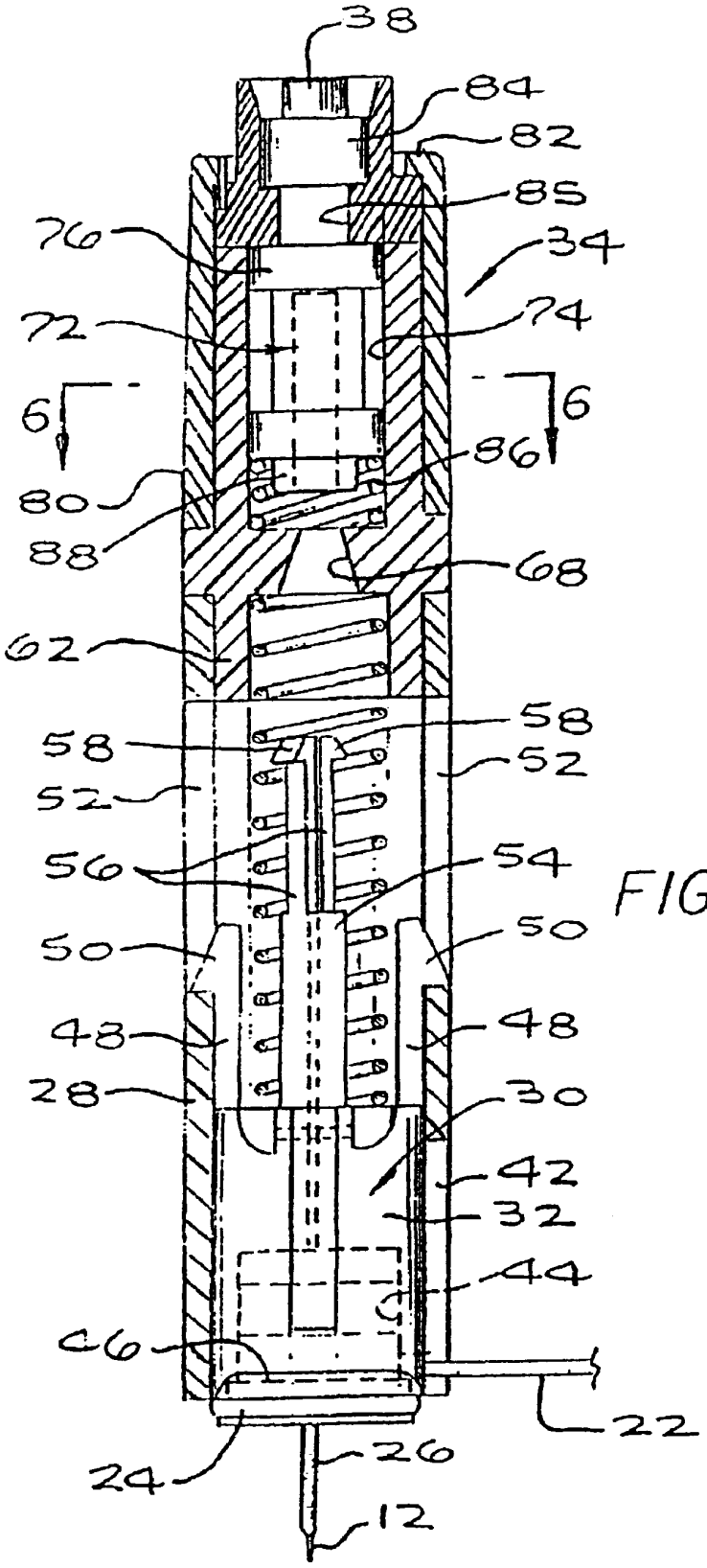
38
84
82
85
76
34
72
74
6
6
86
80
88
68
62
58
58
52
52
56
54
50
50
48
48
28
30
42
32
44
46
22
24
26
12

FIG. 5

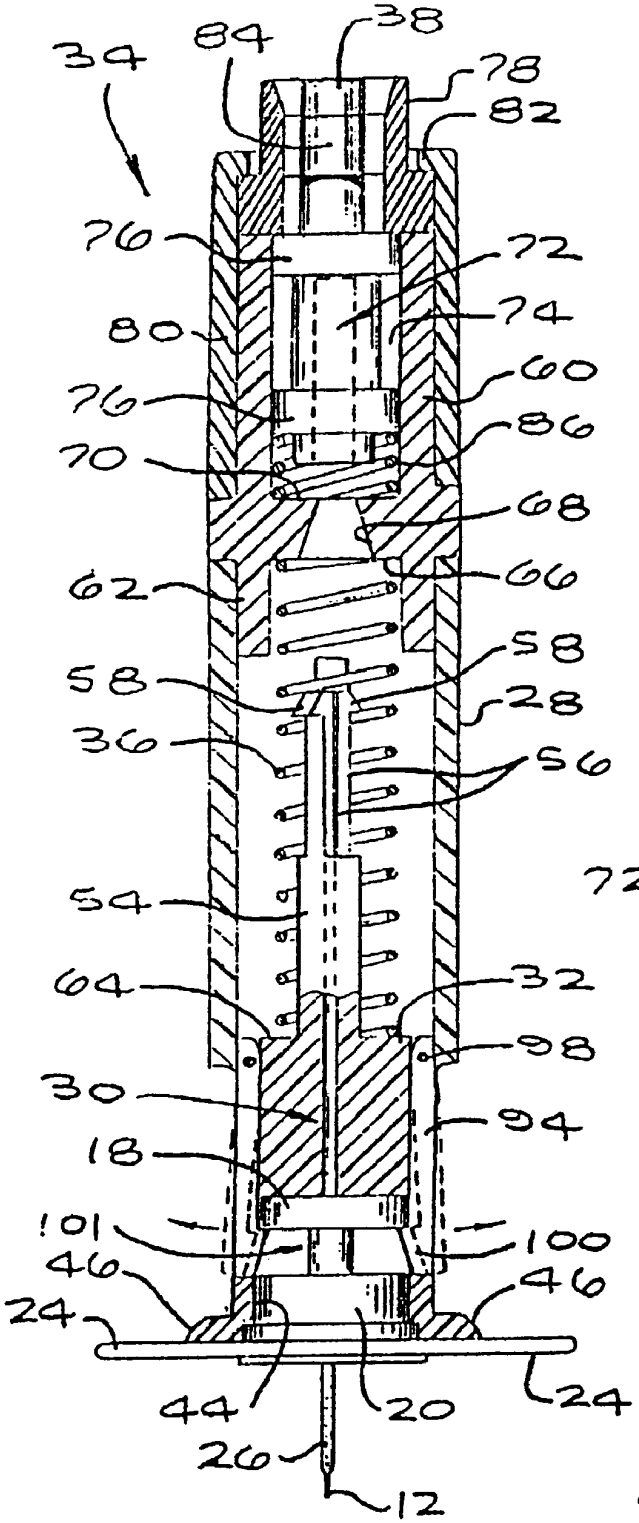
34
84
38
78
82
76
72
80
74
76
60
70
86
68
62
66
58
58
28
36
56
54
64
32
98
30
94
18
101
100
46
46
24
24
44
20
26
12

FIG. 7

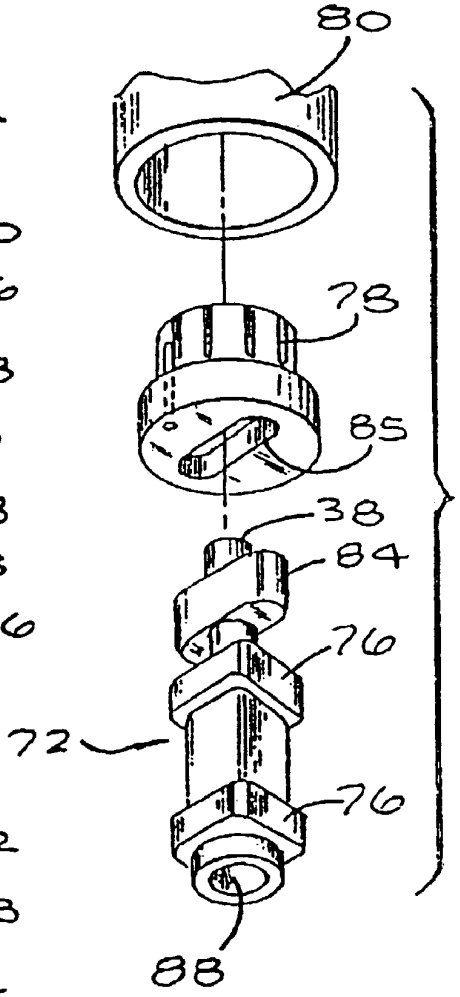
80
78
85
38
84
76
72
76
88

FIG. 8

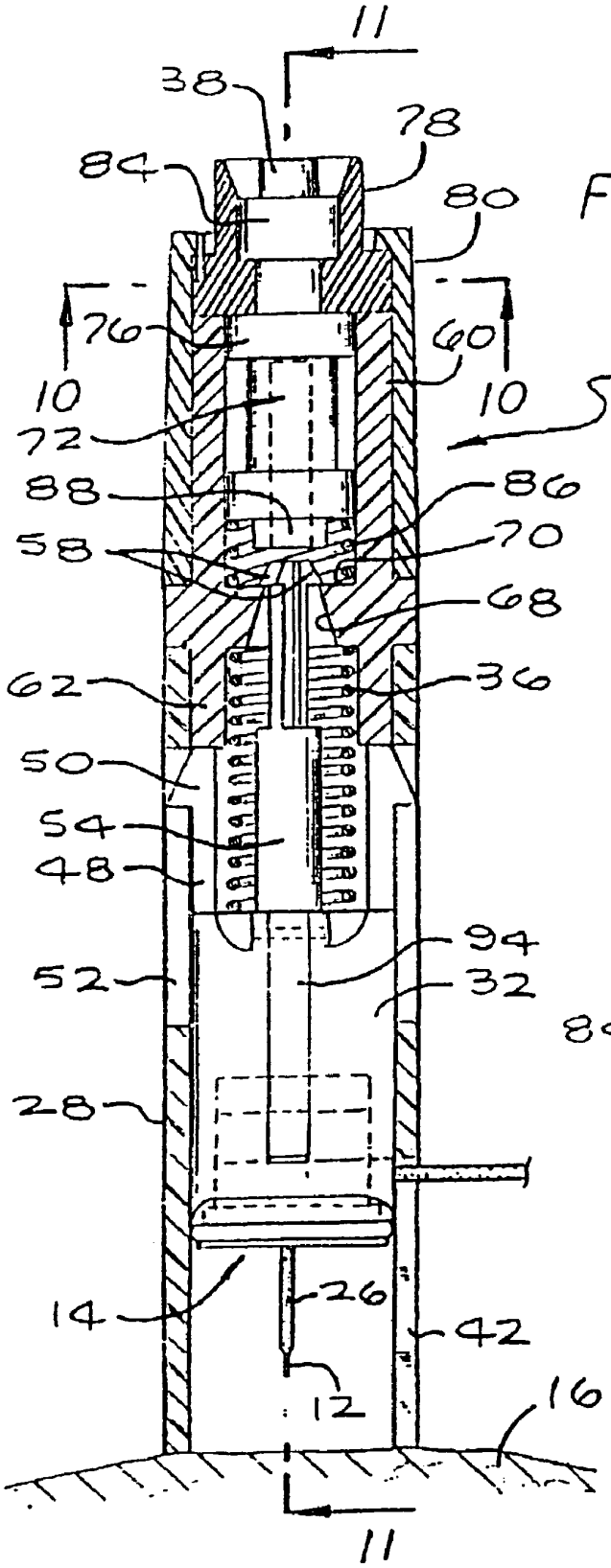
11
38
78
84
80
76
60
10
10
34
72
88
86
58
70
68
62
36
50
54
48
94
52
32
28
14
26
42
12
16
11

FIG. 9

FIG. 10

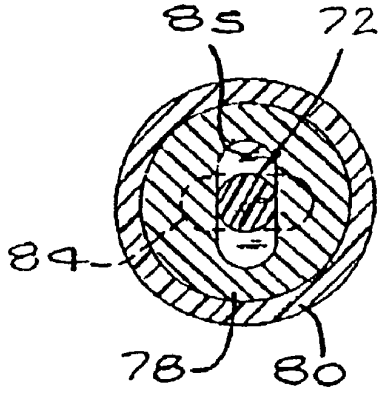
85
72
84
78
80

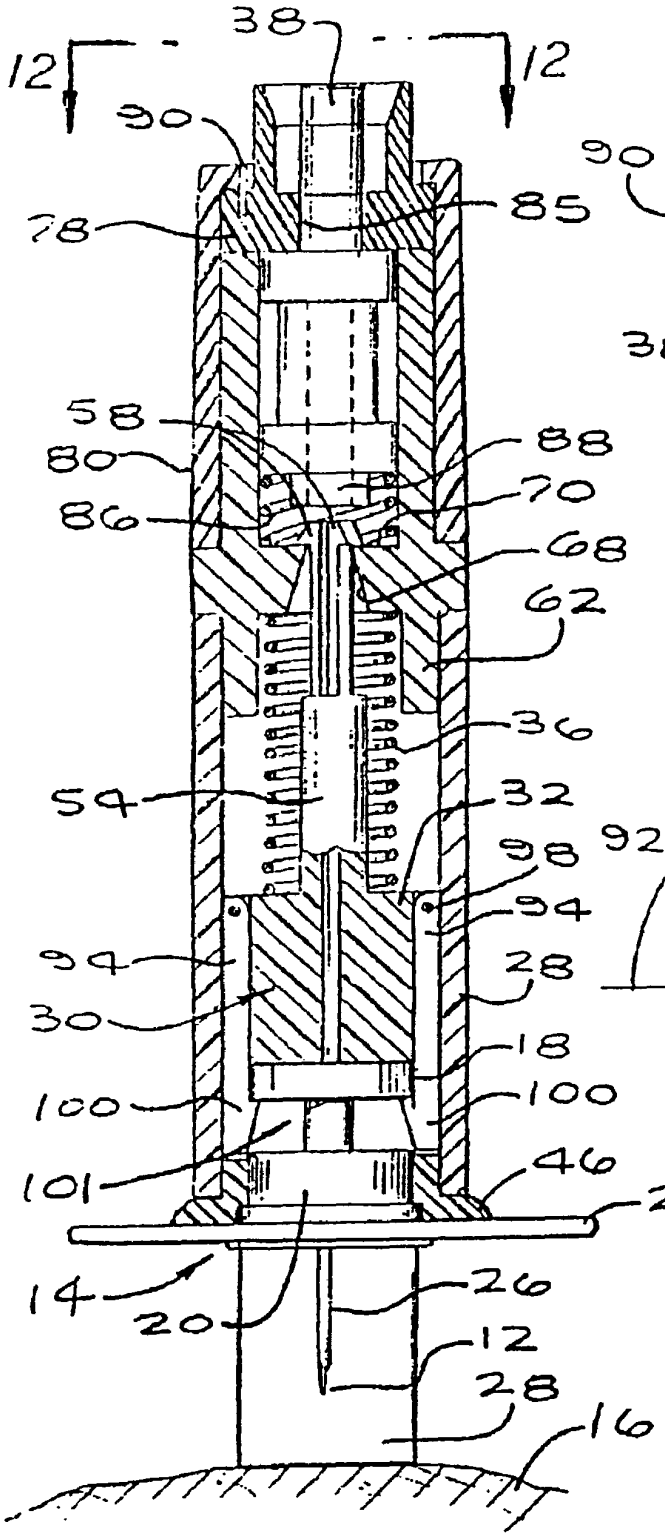

FIG. 11

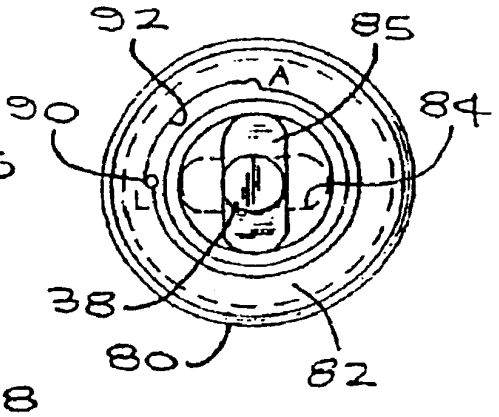

FIG. 12

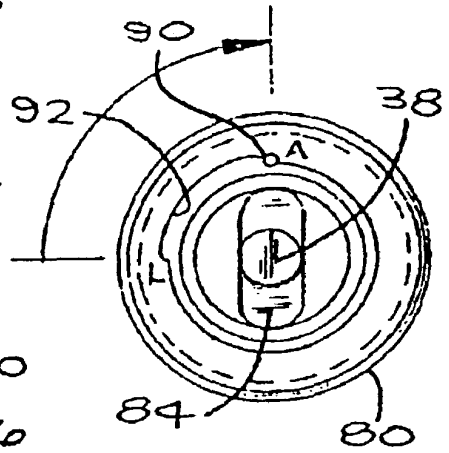

FIG. 14

FIG. 13

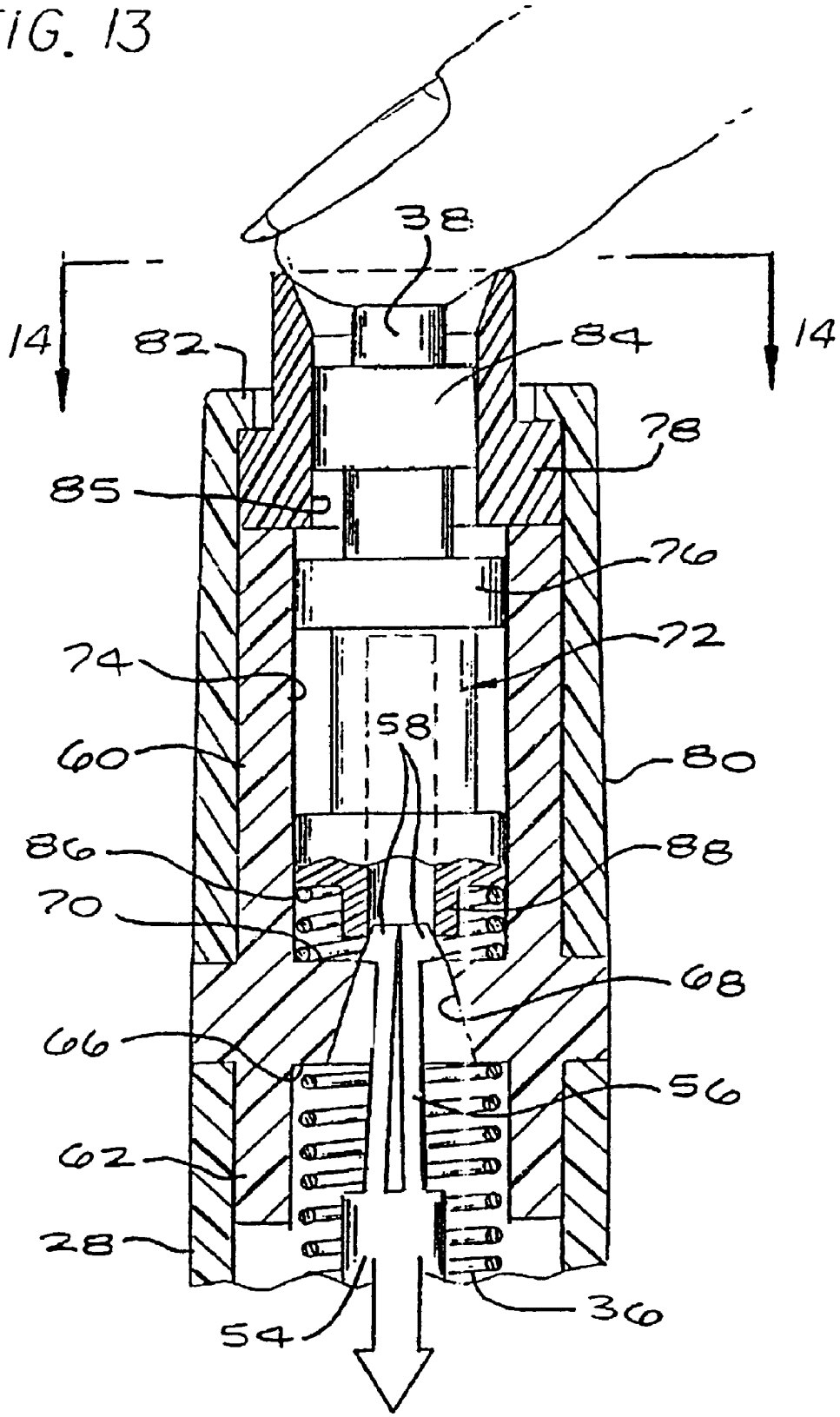

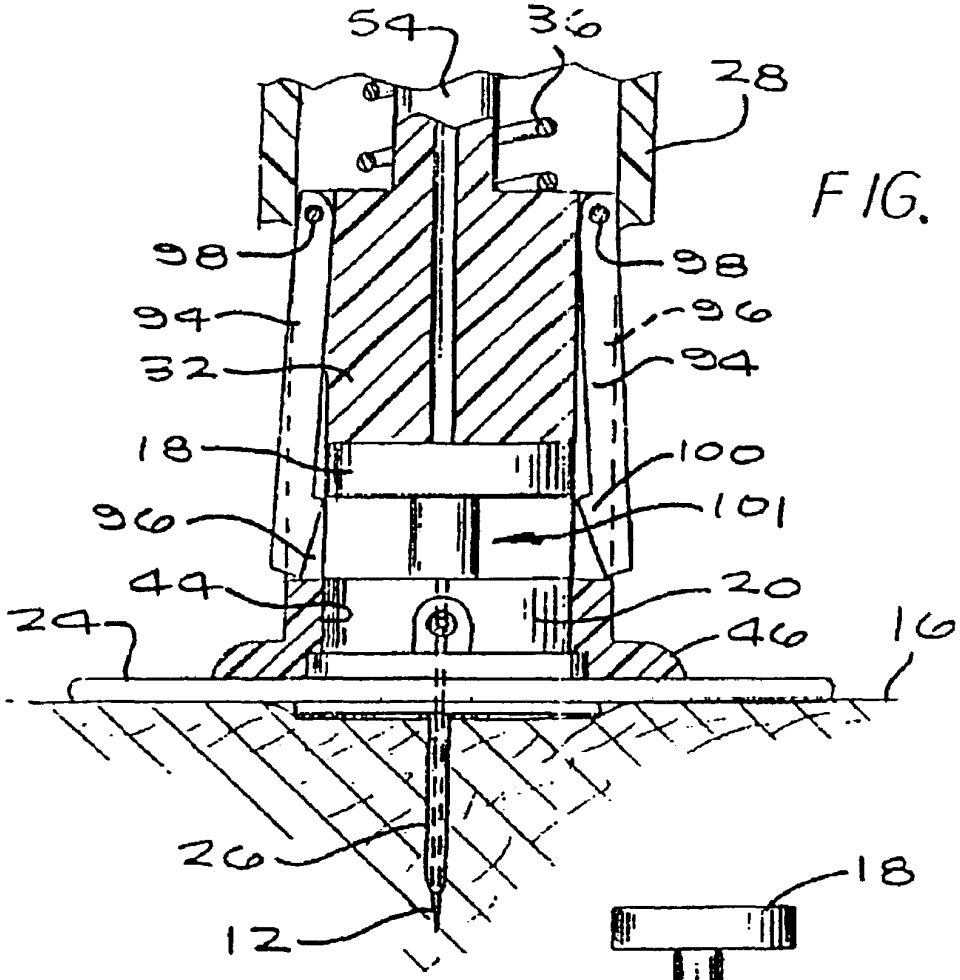
54
36
28
98
98
94
96
32
94
18
100
96
101
44
20
24
46
16
26
12

FIG. 15

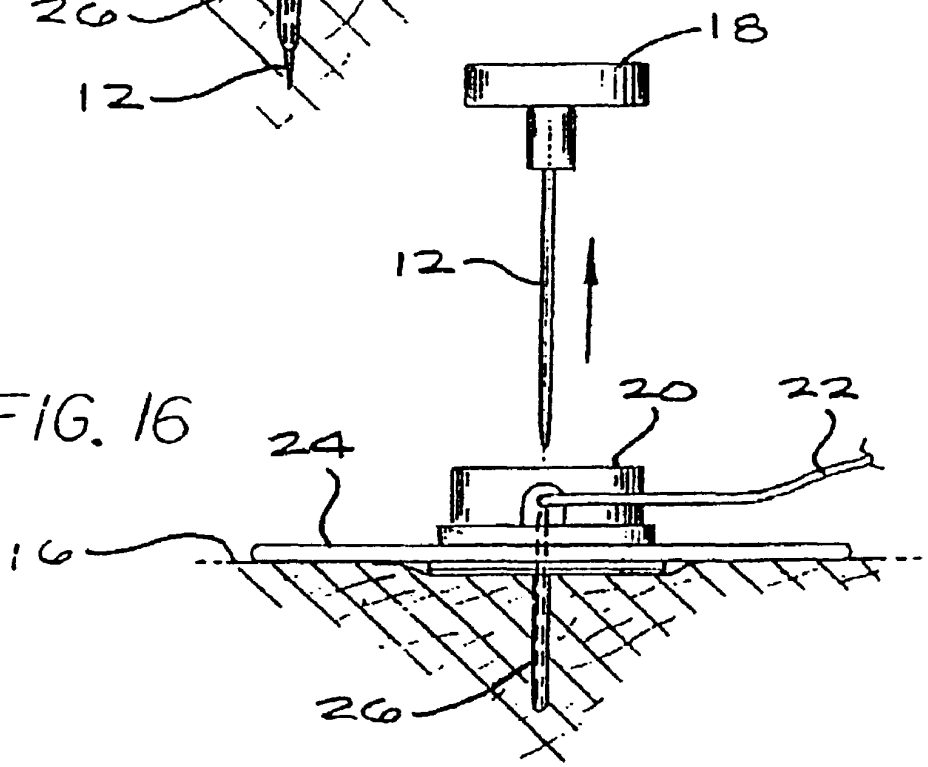
18
12
20
22
24
16
26

FIG. 16

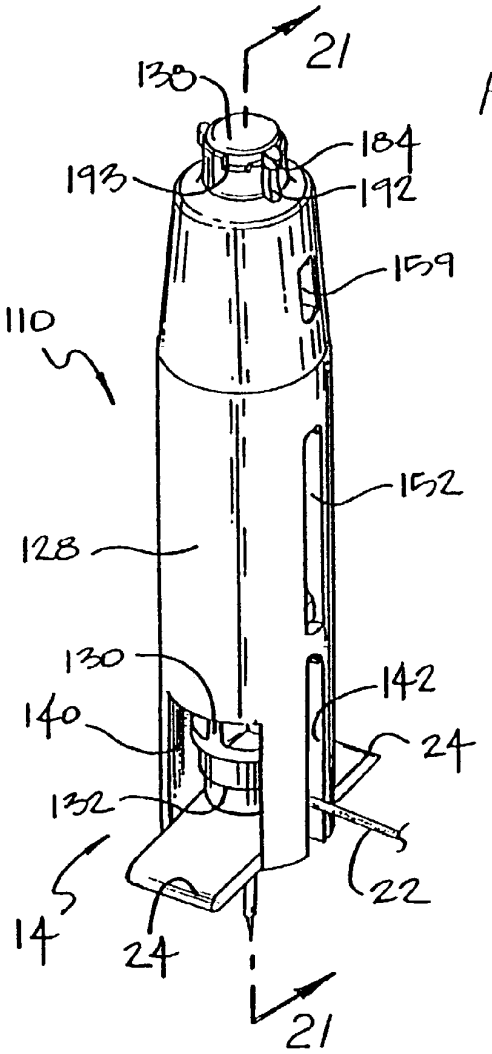

FIG. 17

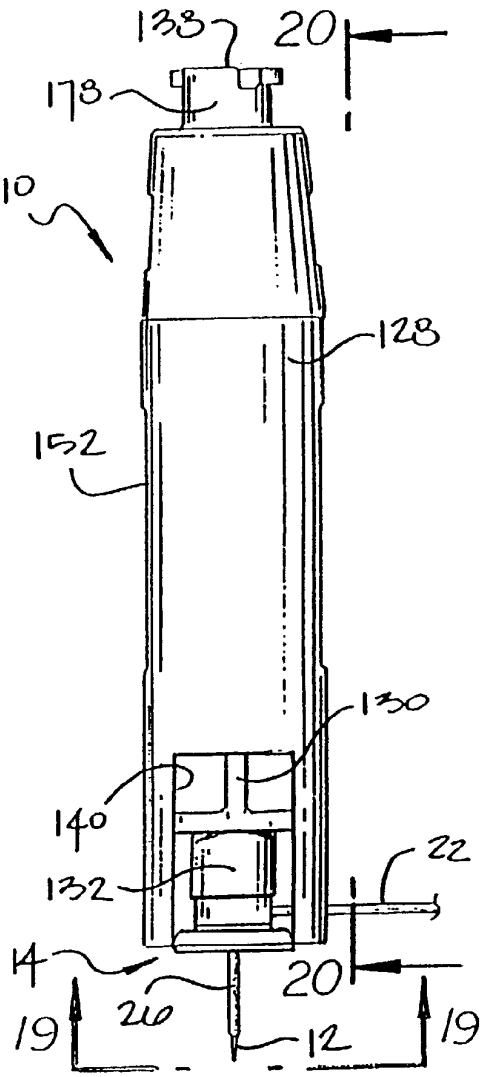

FIG. 18

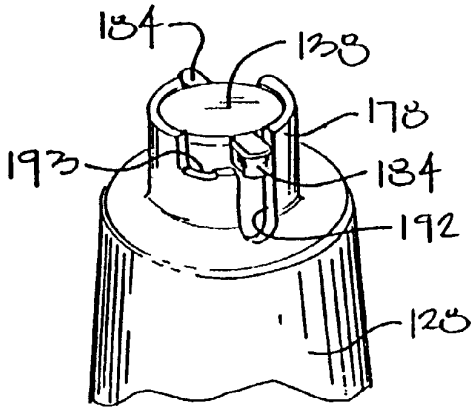

FIG. 24

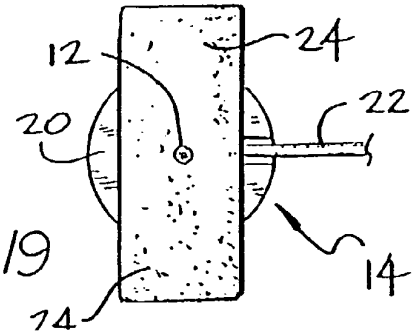

FIG. 19

FIG. 20

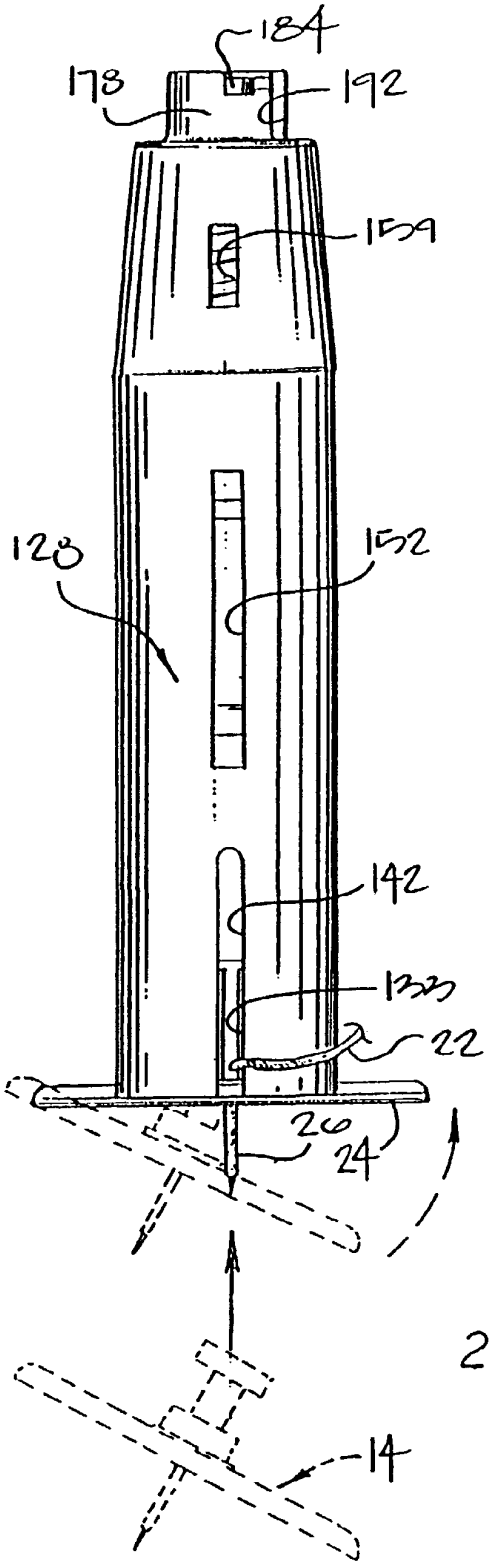
184
178
192
159
128
152
142
133
22
26
24
14

FIG 22

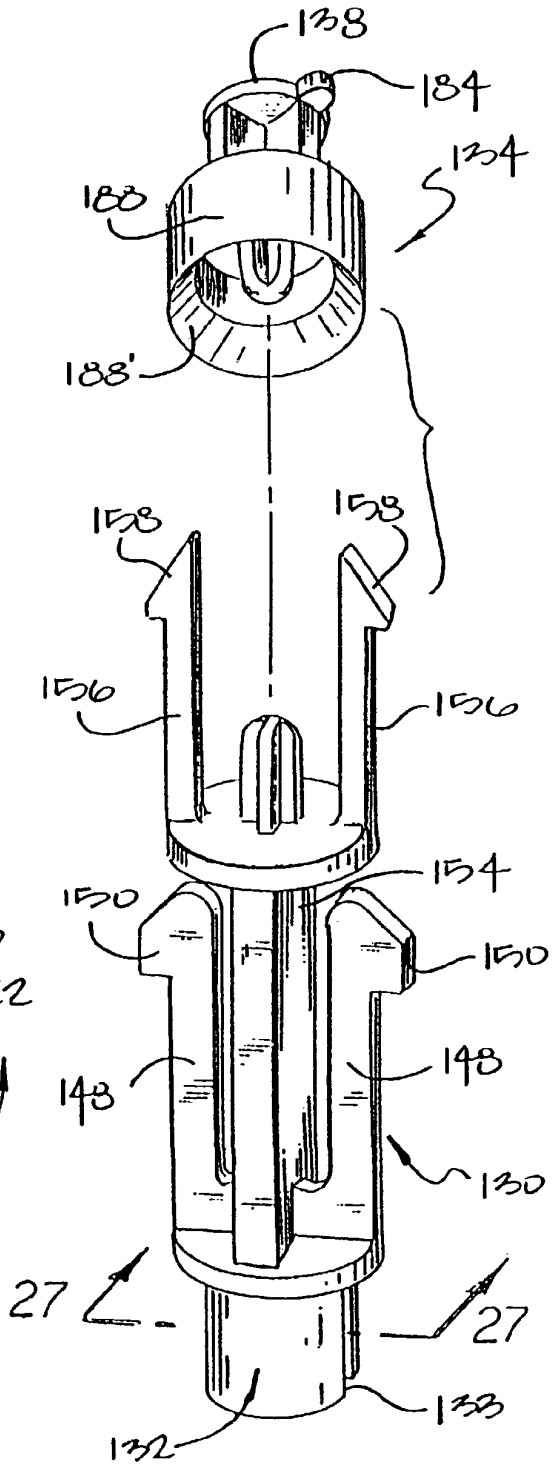
138
184
134
188
188'
158
158
156
156
154
150
150
148
148
130
27
27
133
132

FIG. 21

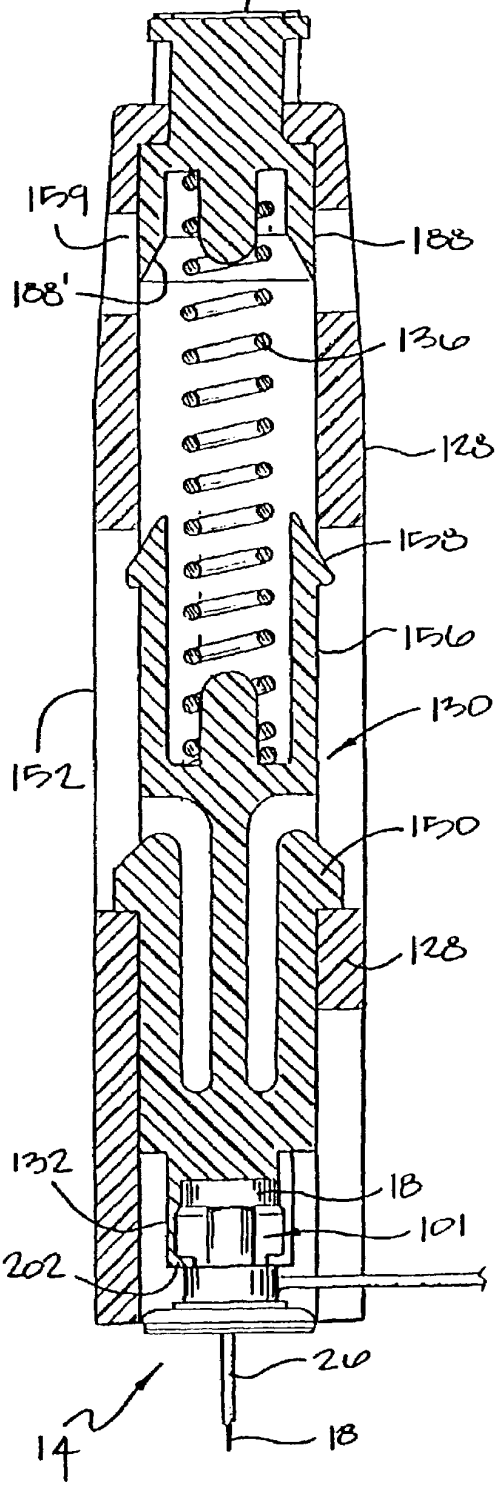
138
159
188
188'
136
128
158
156
130
152
150
128
132
18
101
202
26
14
18

FIG. 23

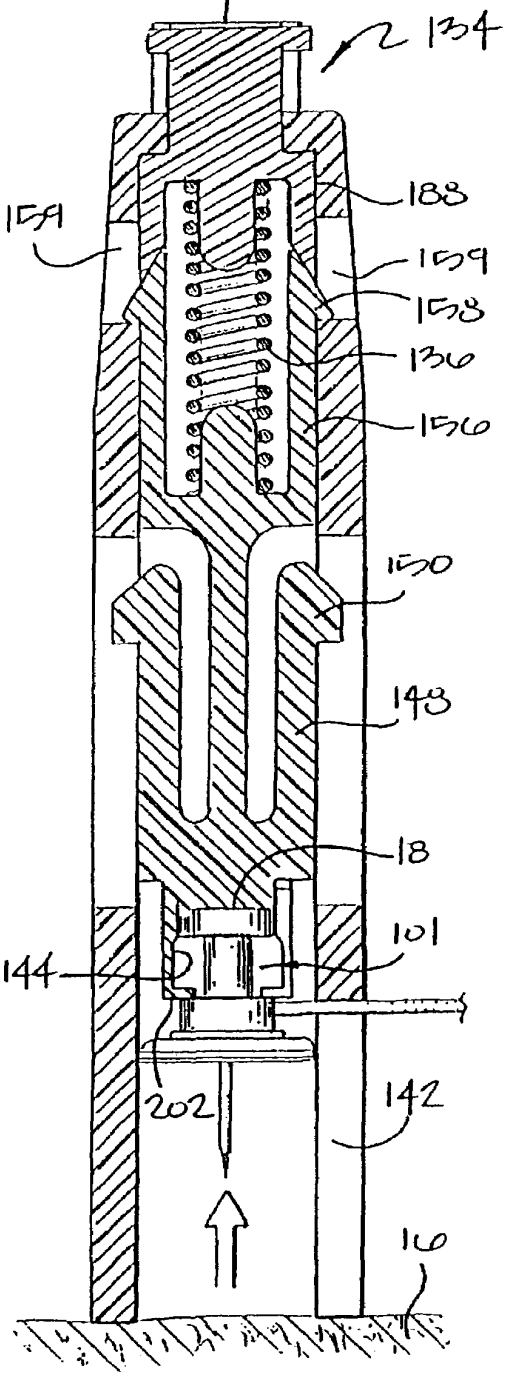
138
134
188
159
159
158
136
156
150
148
18
101
144
202
142
16

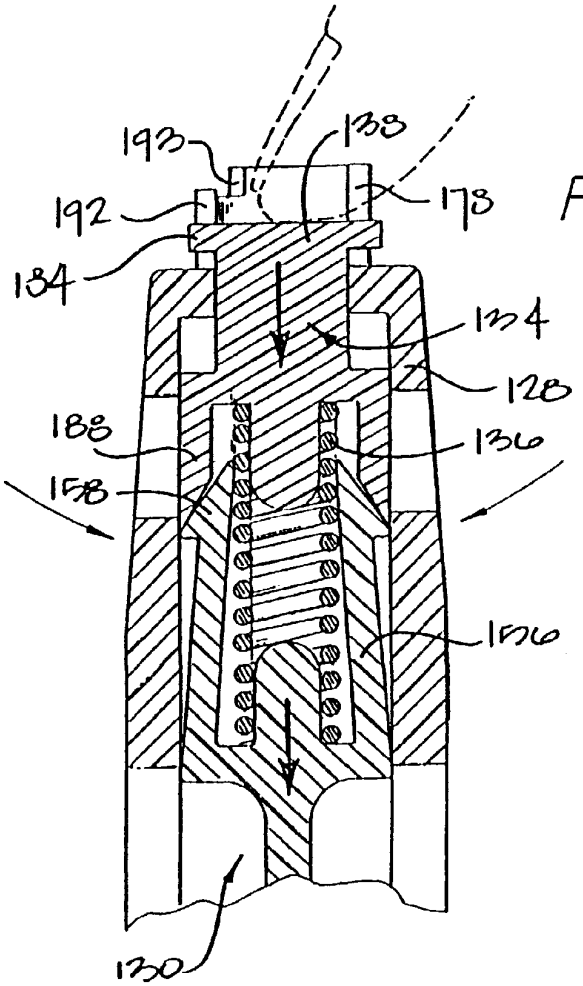
193
138
192
178
134
134
128
188
136
158
156
130

FIG. 25

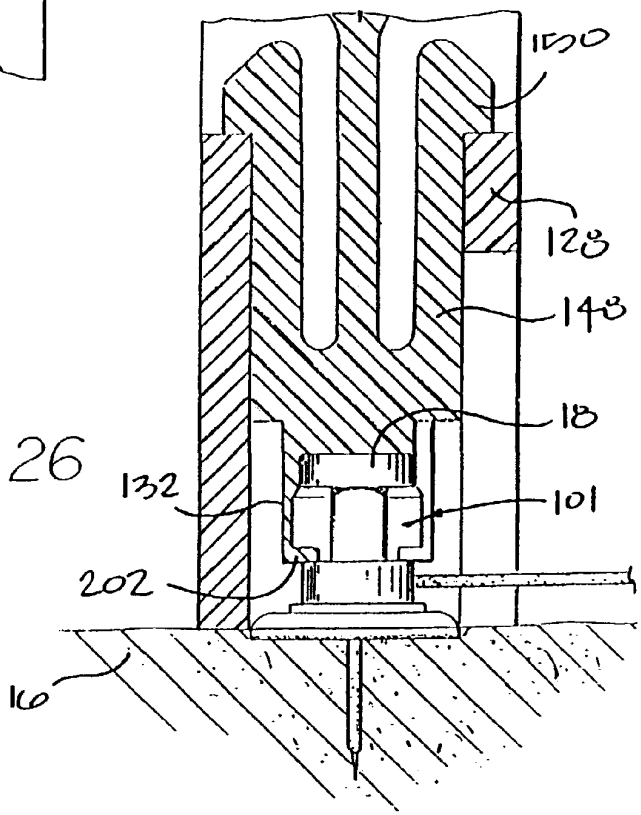
150
128
148
18
132
101
202
16

FIG. 26

FIG. 27

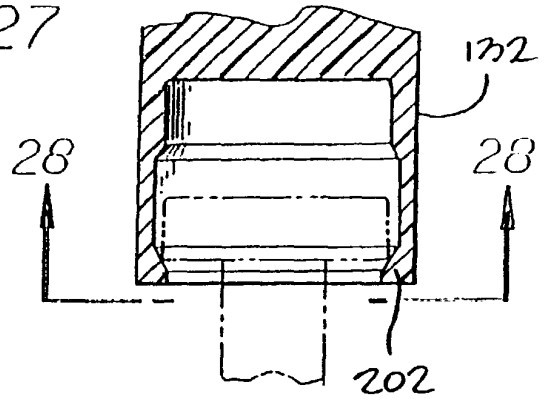

FIG. 29

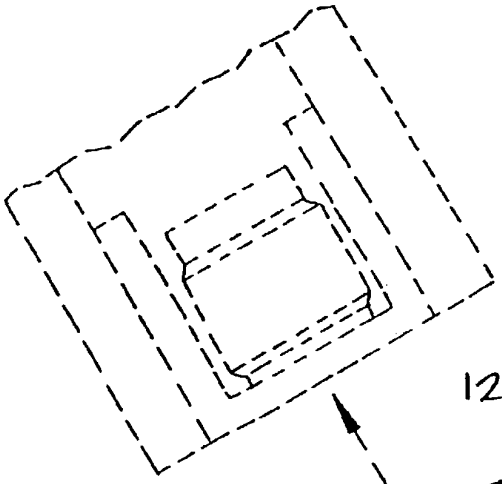

FIG. 28

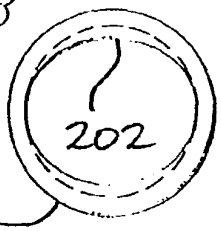

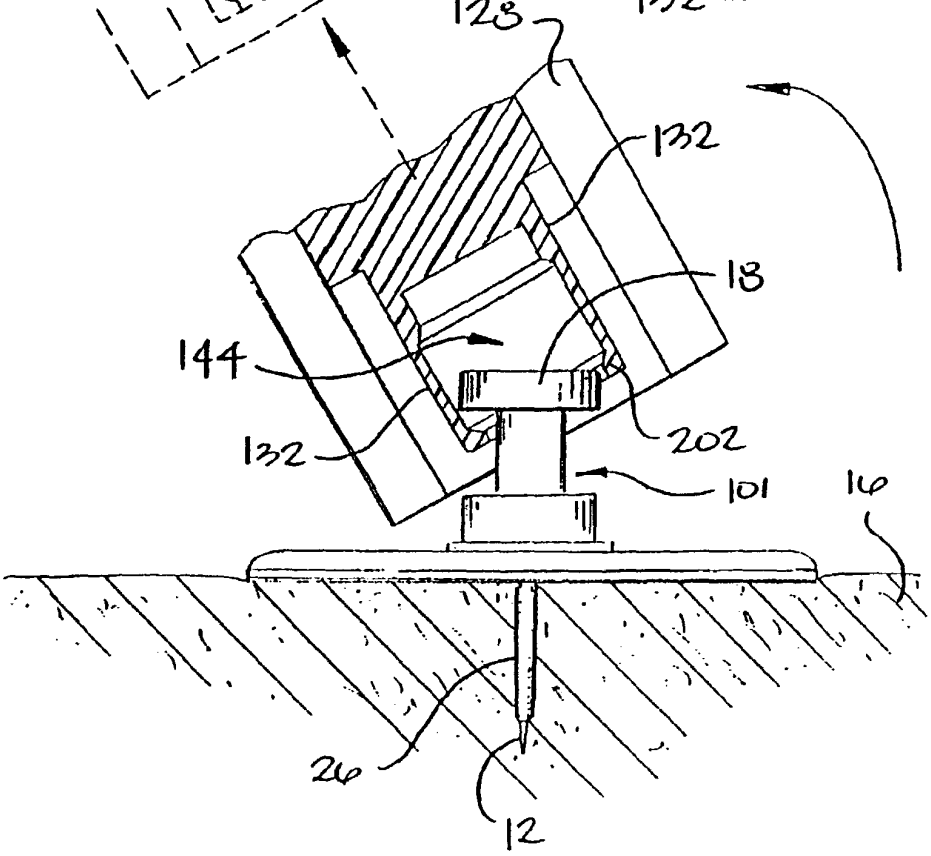

FIG. 30

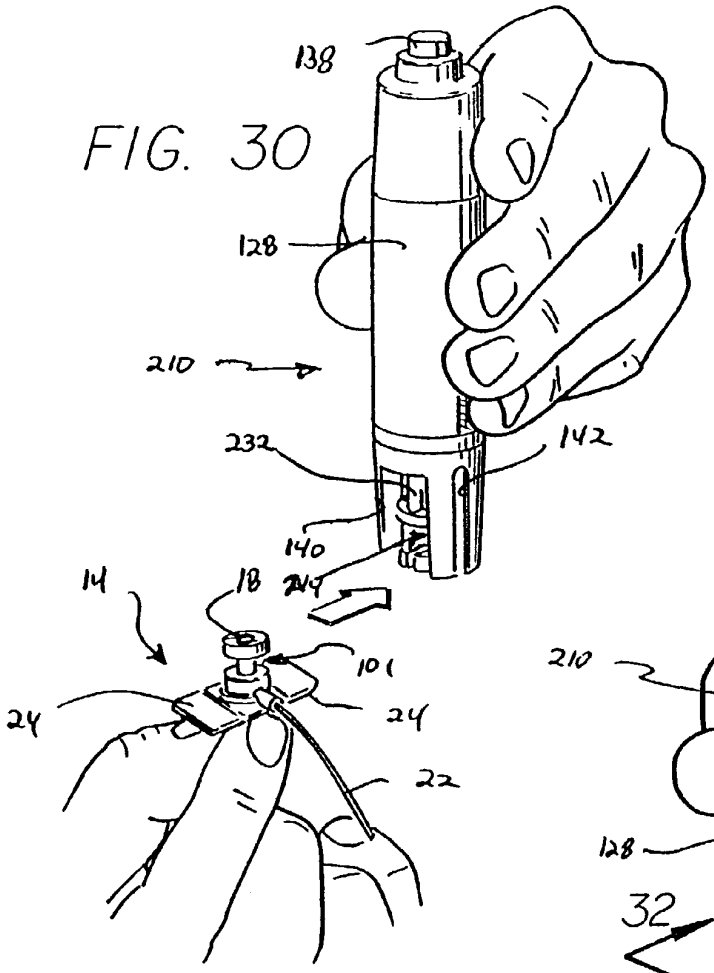

FIG. 31

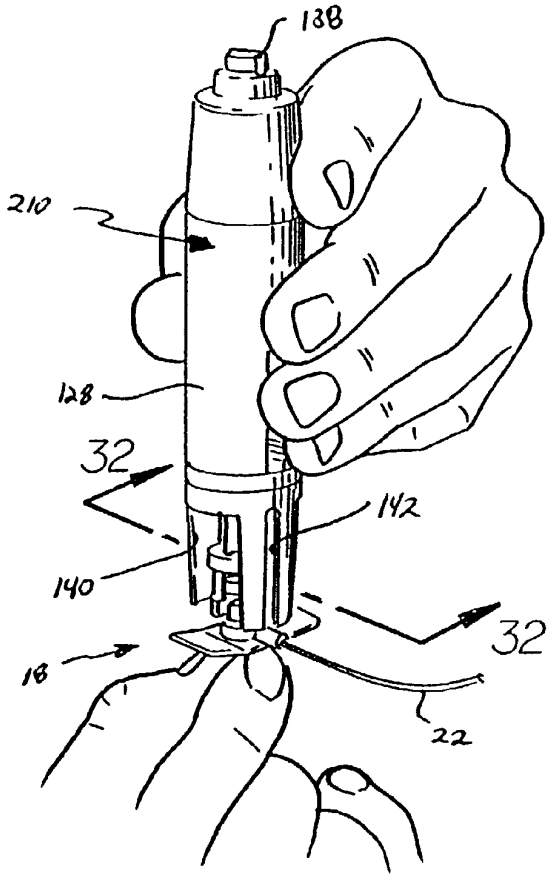

FIG. 32

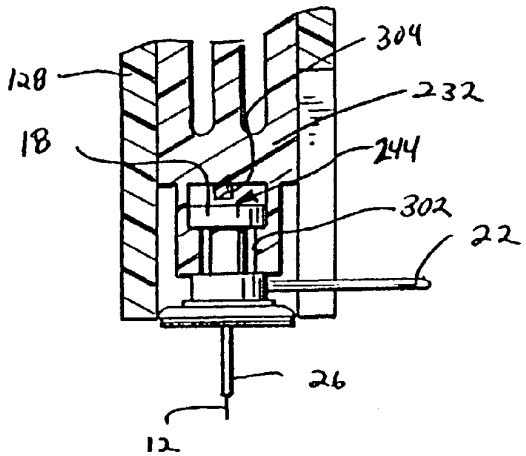

FIG. 33

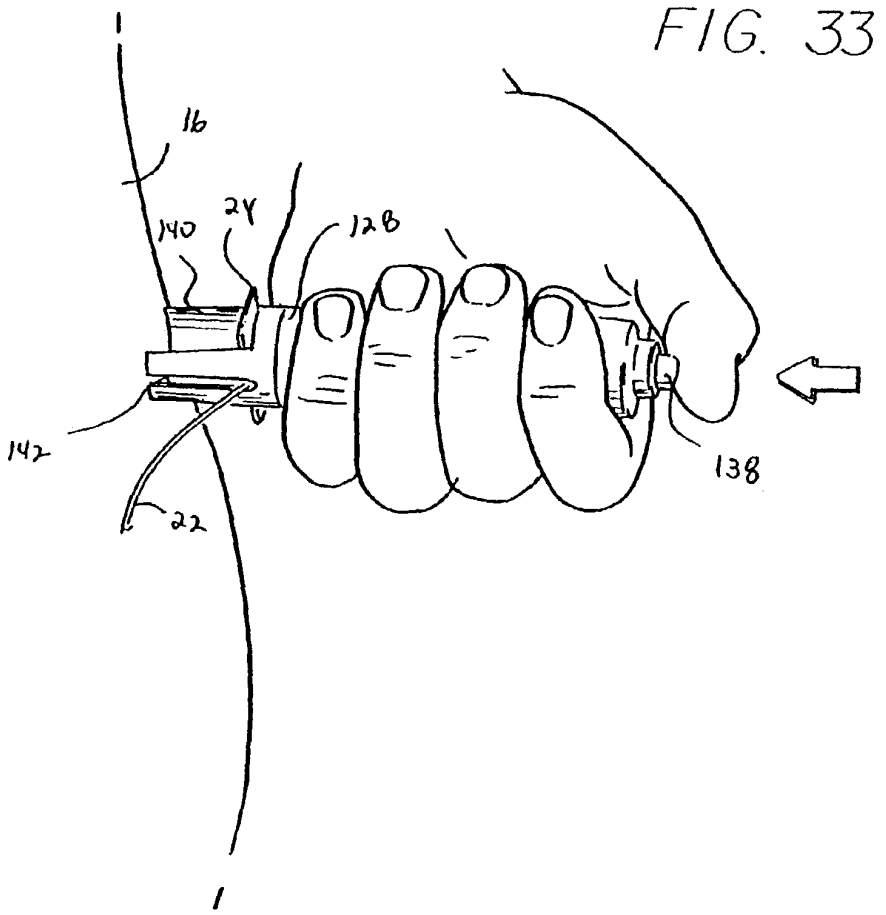

FIG. 34

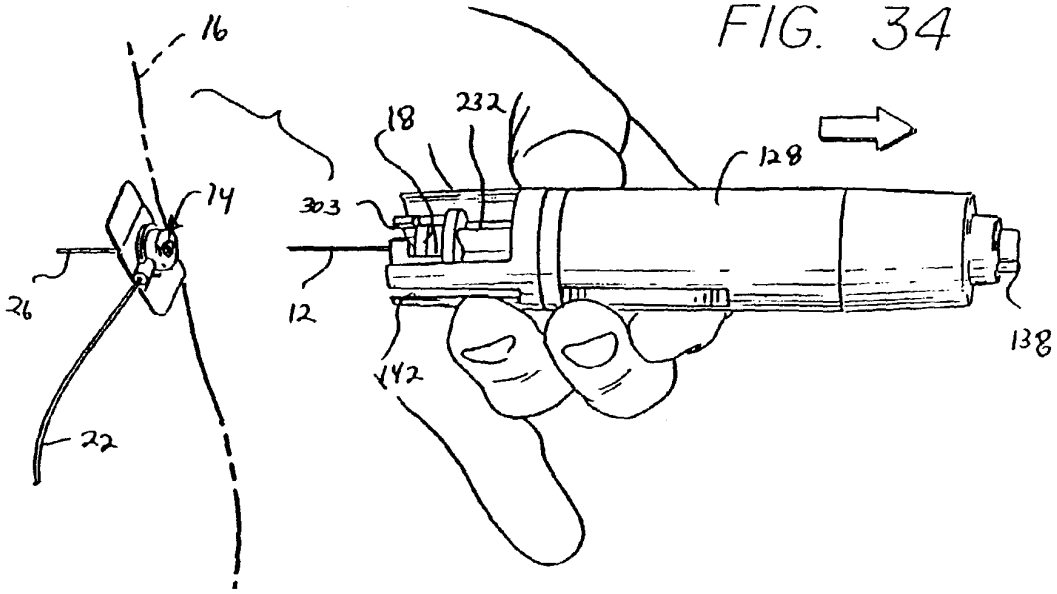

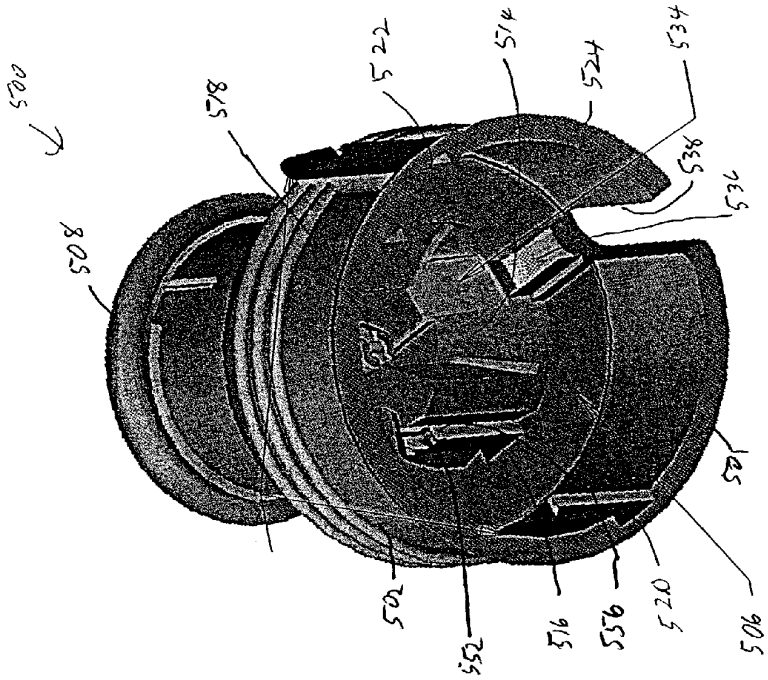
500
508
578
522
514
524
534
538
536
502
552
516
556
520
506
505

Fig. 36

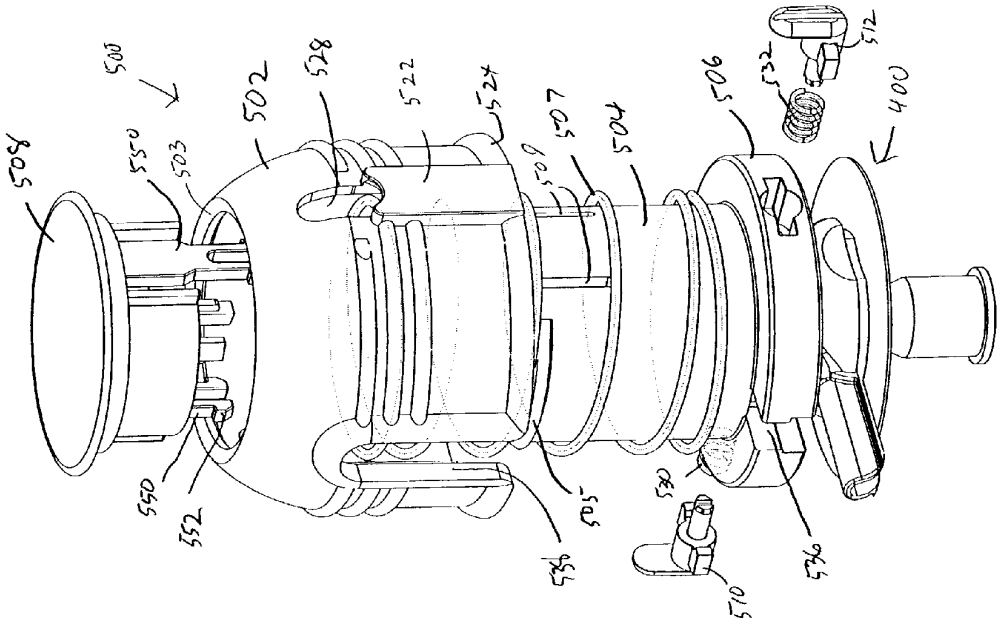
504
500
550
503
502
528
522
524
507
505
504
506
532
512
400
550
552
534
505
530
510
536

Fig. 35

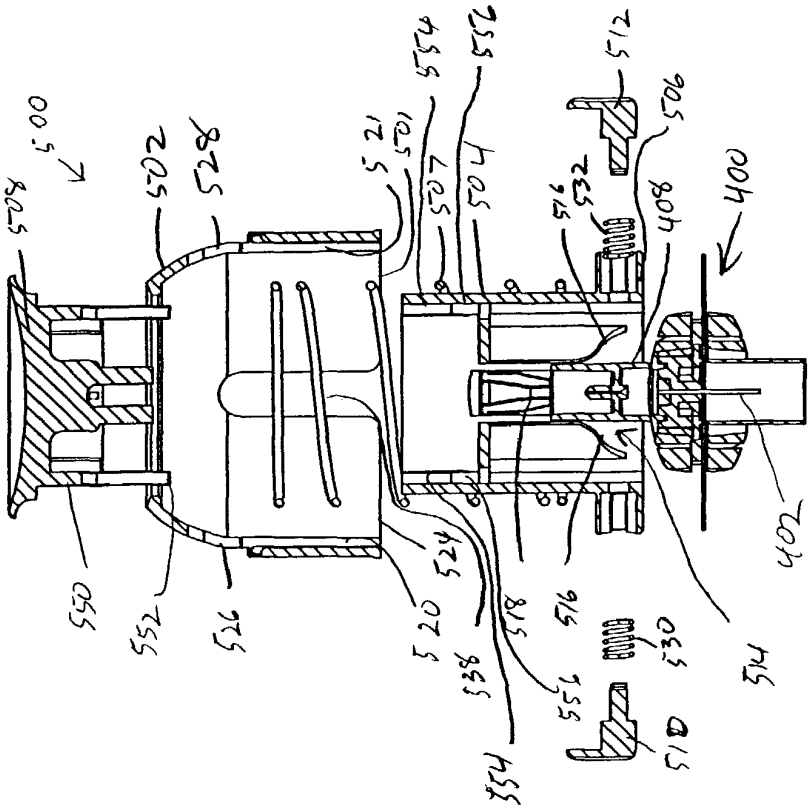

Fig. 38

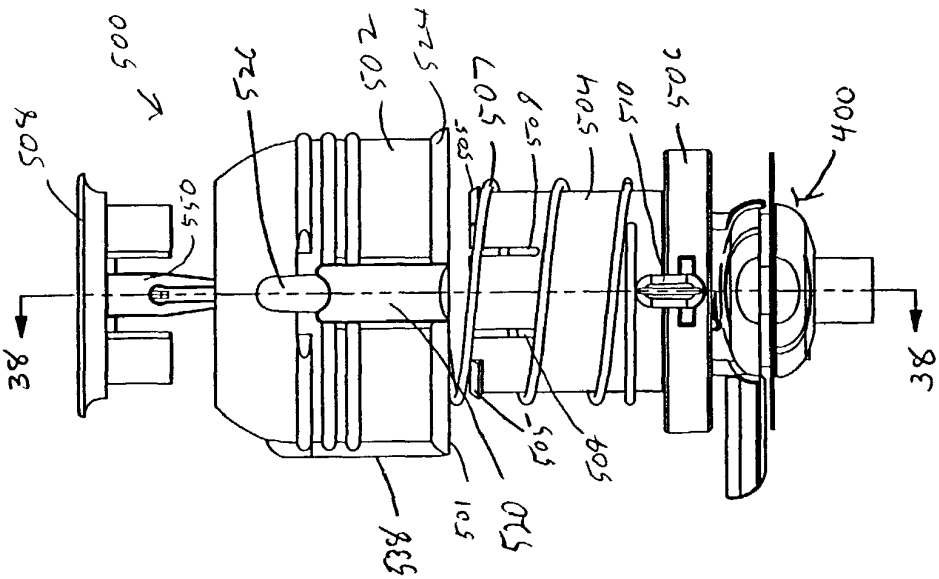

Fig. 37

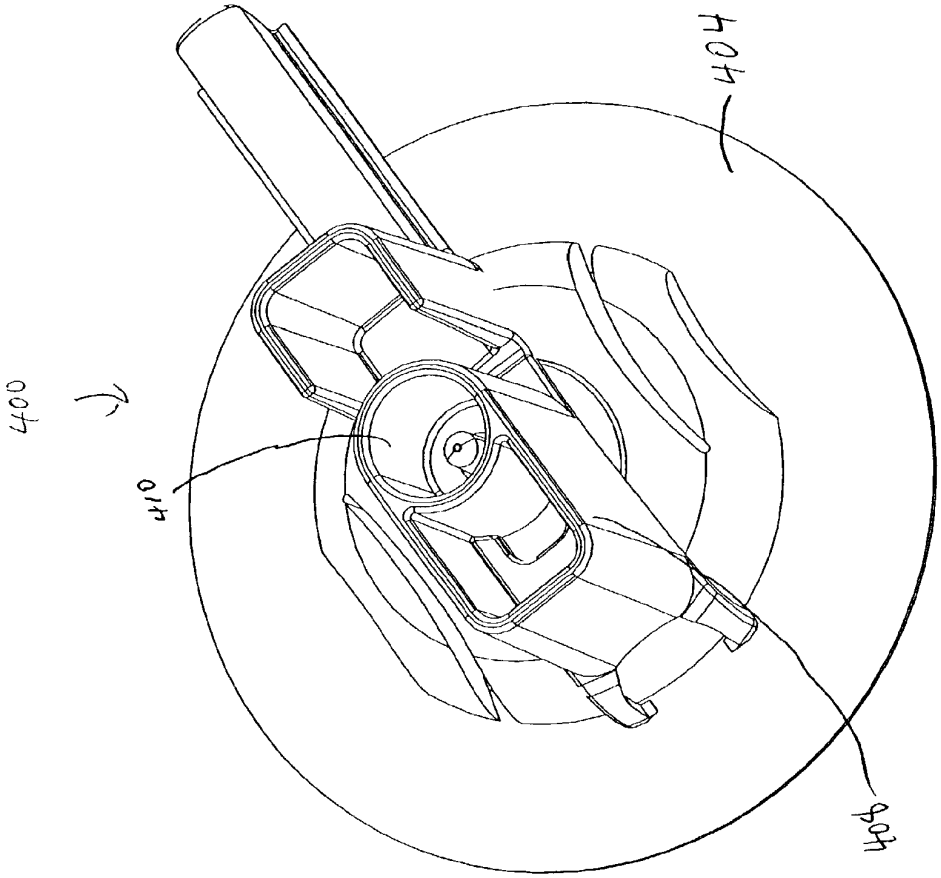

Fig. 39

Fig. 40c

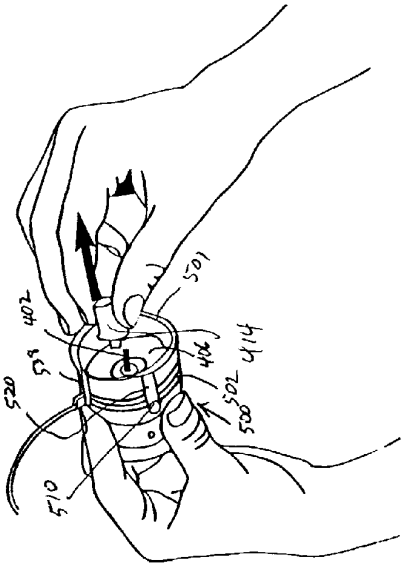

Fig. 40d

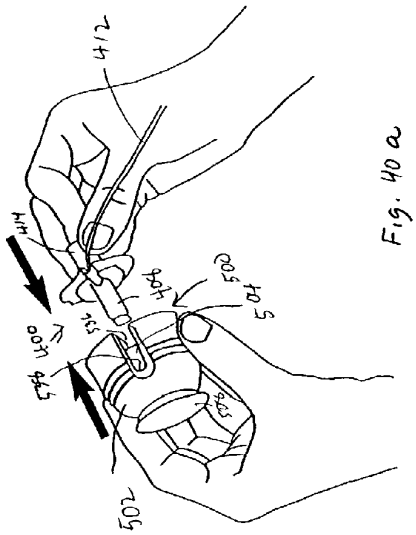

Fig. 40a

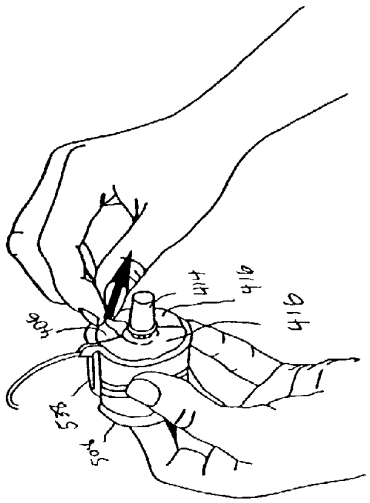

Fig. 40b

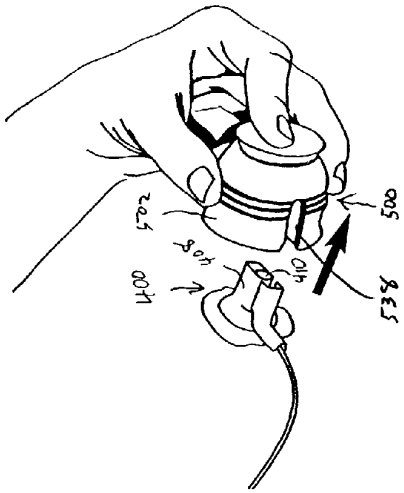

Fig. 40g

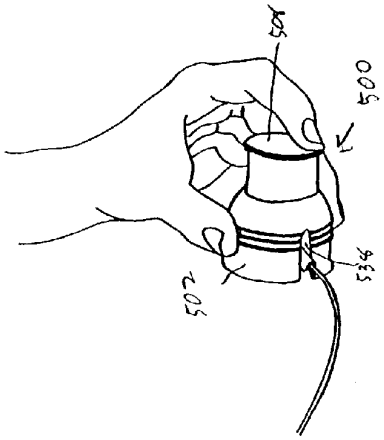

Fig. 40e

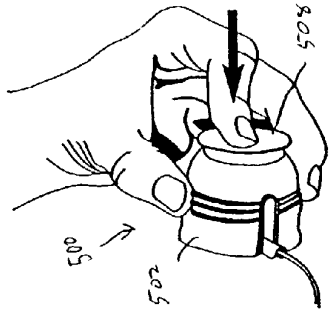

Fig. 40f

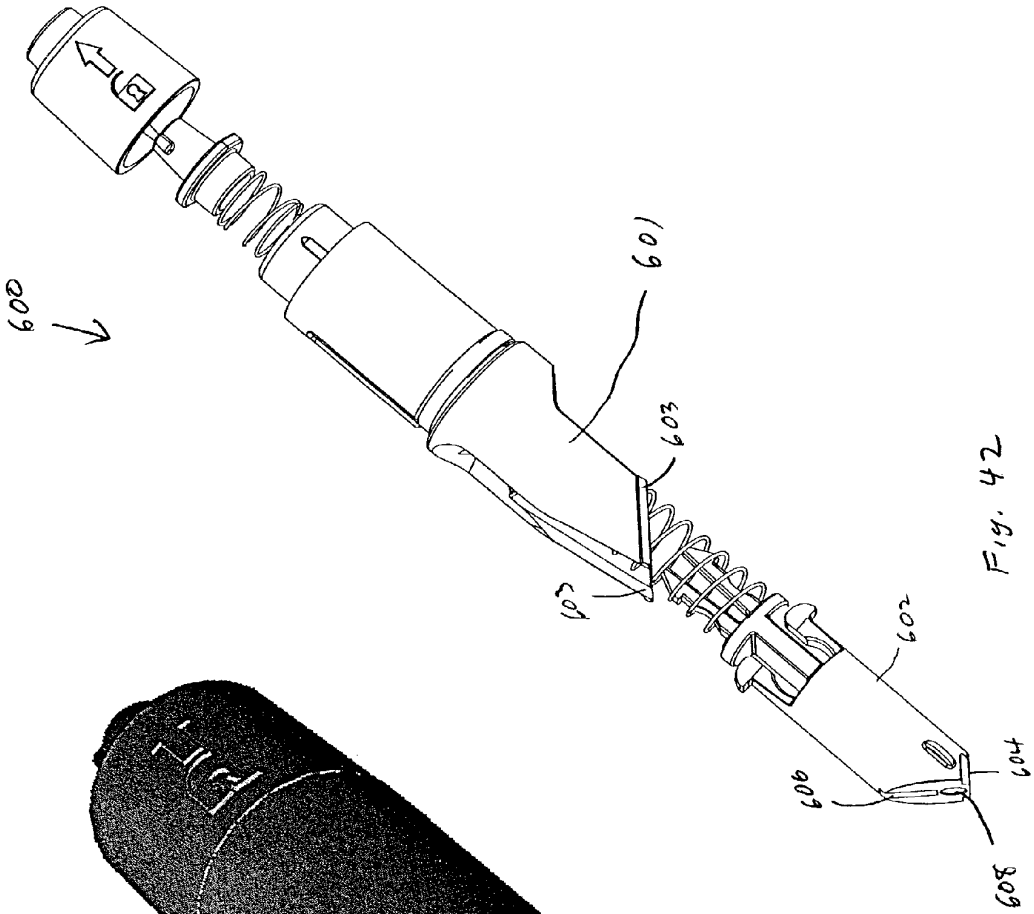

Fig. 42

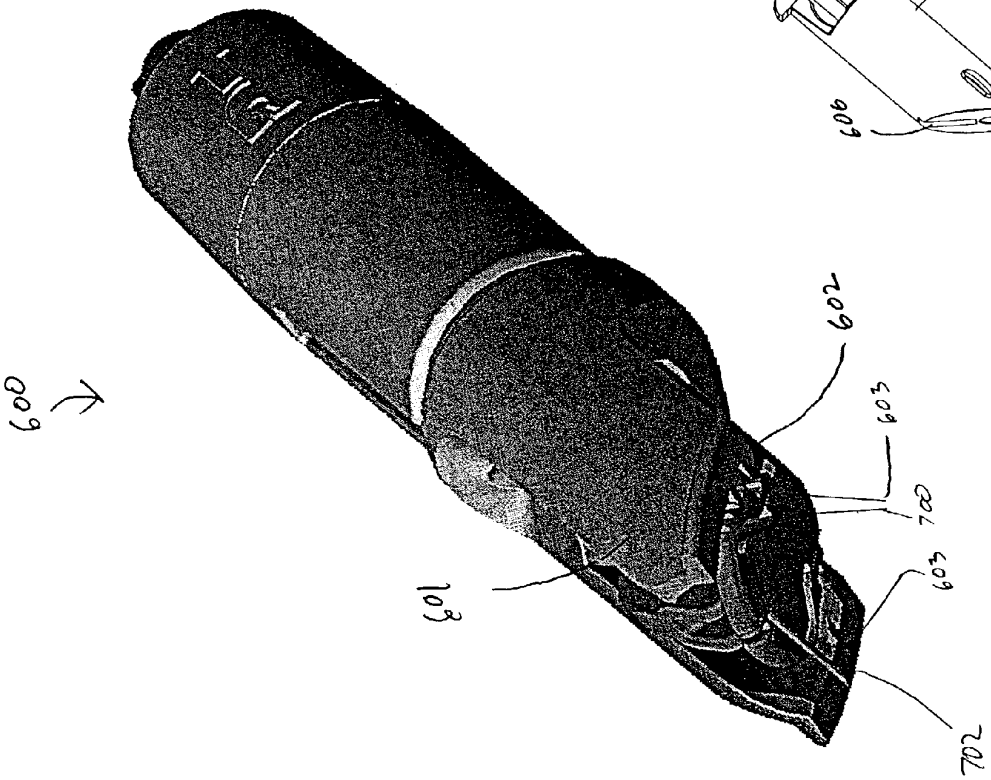

Fig. 41

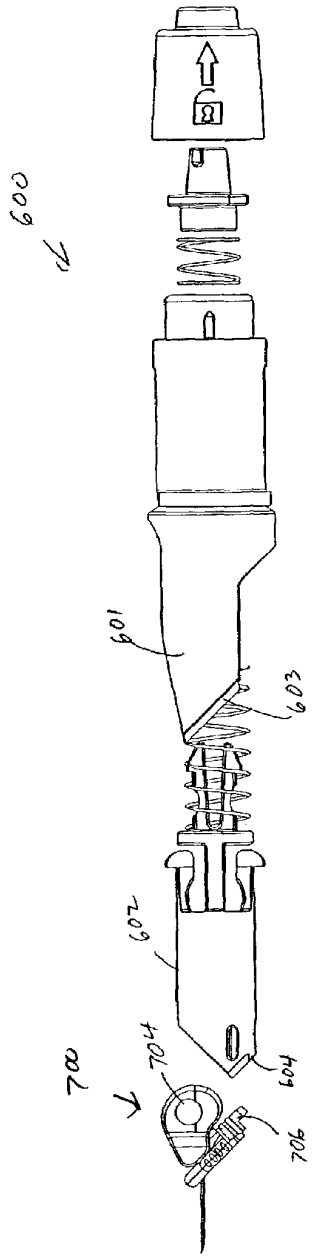

Fig. 43

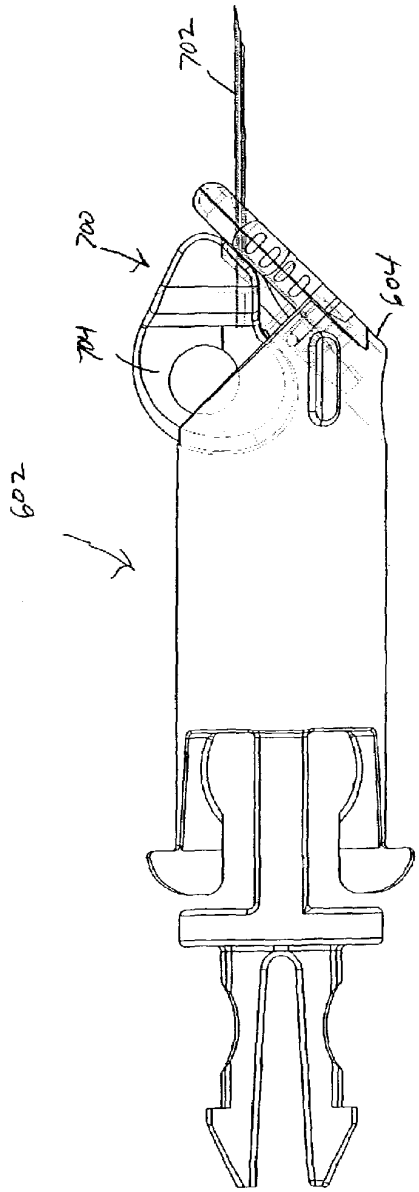

Fig. 44

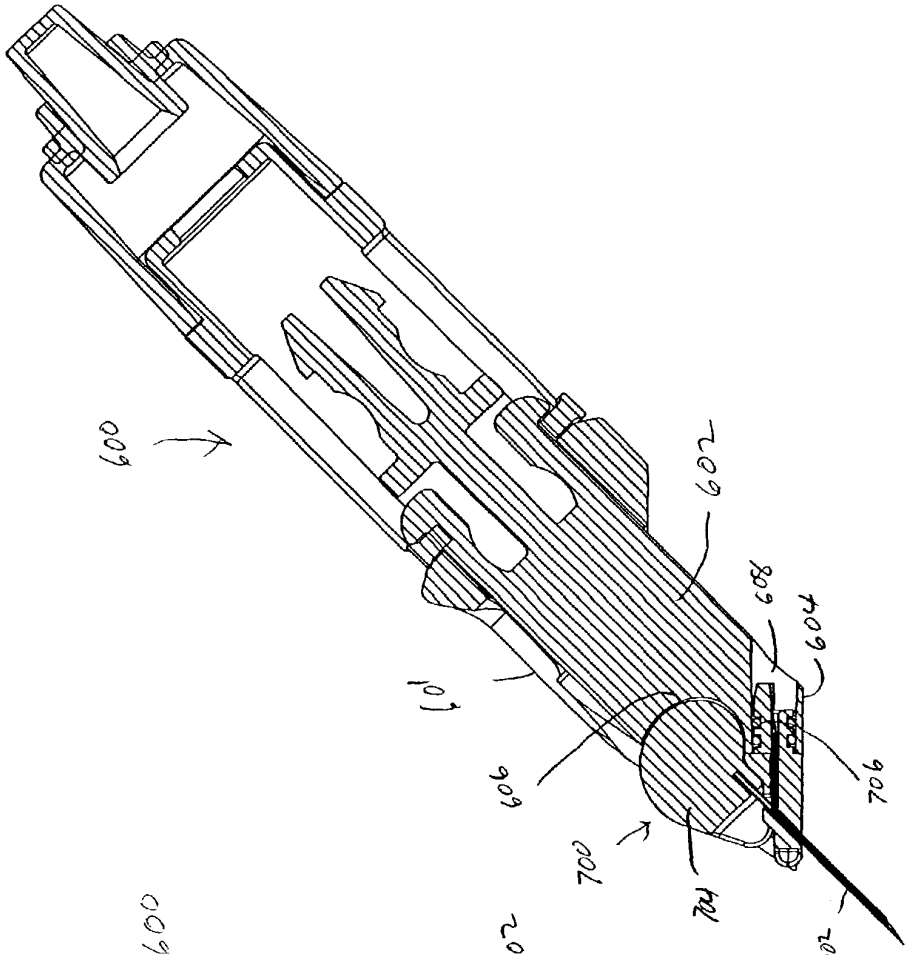
600
602
608
604
601
606
706
700
704
702

Fig. 46

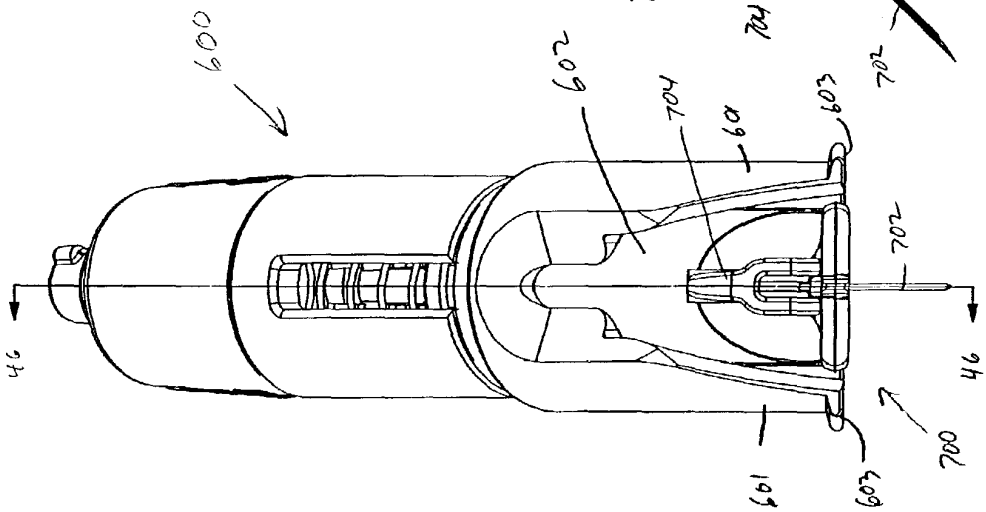
600
602
704
601
603
702
46
46
700
603
601

Fig. 45

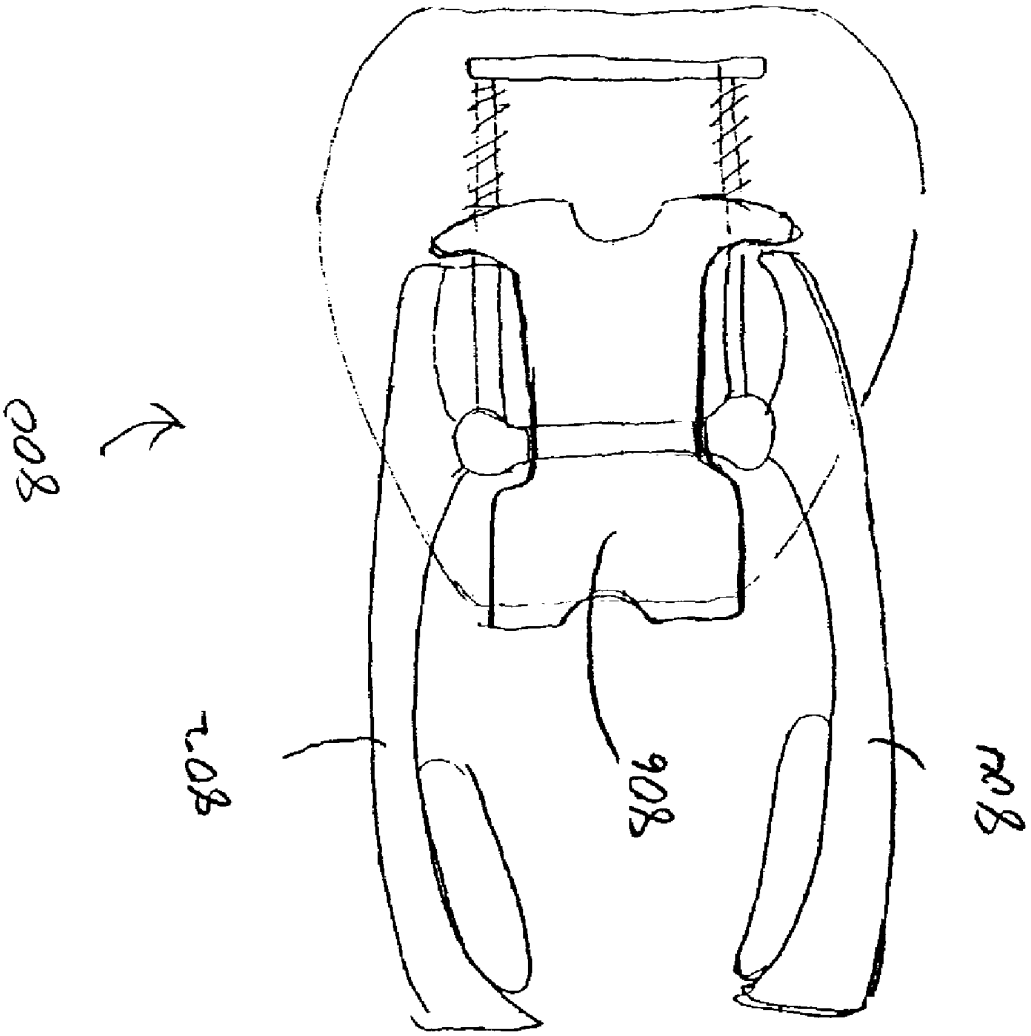

Fig. 47

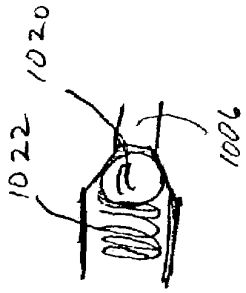

Fig. 48b

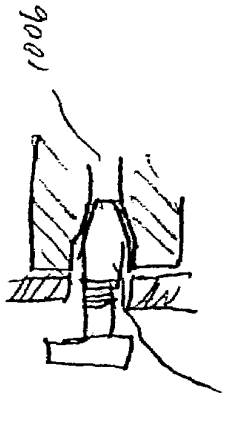

Fig. 48d

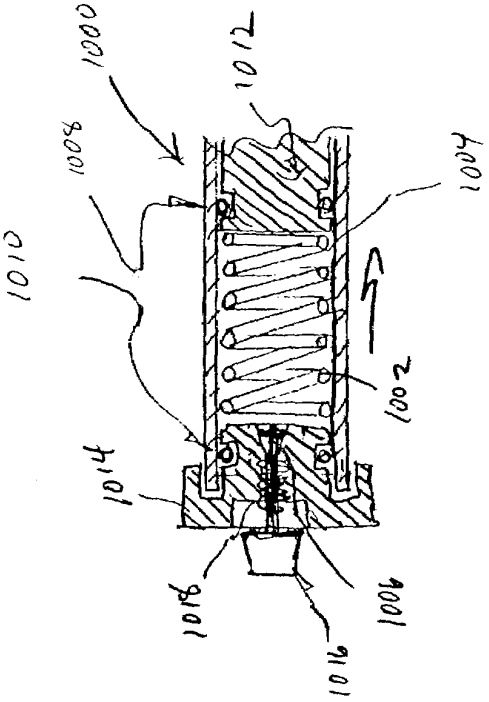

Fig. 48a

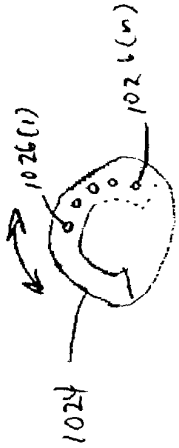

Fig. 48c

INSERTION DEVICE FOR AN INSERTION SET AND METHOD OF USING THE SAME

RELATED APPLICATIONS

This is a continuation of application Ser. No. 09/839,052 filed on Apr. 20, 2001 , now U.S. Pat. No. 6,607,509, which is a continuation-in-part of application Ser. No. 09/215,356 filed Dec. 18, 1998 , now U.S. Pat. No. 6,293,925, which is a continuation-in-pan of application Ser. No. 09/002,303 filed Dec. 31, 1997 now U.S. Pat. No. 6,093,172, which is a continuation-in-part of application Ser. No. 08/795,968 filed Feb. 5, 1997 now U.S. Pat. No. 5,851,197.

FIELD OF THE INVENTION

This invention relates generally to an insertion device for automatic placement of an insertion set through the skin of a patient, and in particular embodiments to a compact and easily operated insertion device for placement of an insertion needle of a subcutaneous insertion set or the like through the skin of a patient with a controlled force and insertion speed by the patient.

BACKGROUND OF THE INVENTION

Medical needles are widely used in the course of patient care and treatment, particularly with respect to the delivery of selected medications to a patient. In one common form, hollow hypodermic needles are employed for transcutaneous delivery of a selected medication from a syringe or the like. In another common form, insertion needles are employed for transcutaneous placement of a soft and relatively flexible tubular cannula, followed by insertion needle removal and subsequent infusion of medical fluid to the patient through the cannula. More recently, insertion needles have also been used for transcutaneously placing other medical devices such as a subcutaneous sensor for monitoring specified patient parameters, such as blood glucose level.

In certain medical treatment regimens, it may be necessary or desirable for the patient to transcutaneously place the medical needle. For example, diabetic patients frequently self-administer insulin injections or periodically place a subcutaneous insertion with a cannula for subsequent programmable delivery of insulin by means of a medication infusion pump of the general type described in U.S. Pat. No. 4,685,903. Such subcutaneous insertion sets are disclosed, for example, in U.S. Pat. Nos. 4,755,173; 5,176,662; and 5,257,980 which are incorporated by reference herein. Diabetic patients may also use a subcutaneous insertion set to periodically place a transcutaneous glucose sensor wherein such sensor insertion sets are disclosed, for example, In U.S. Pat. Nos. 5,390,674; 5,568,806; 5,586,553, which are also incorporated by reference herein.

Some patients are reluctant or hesitant to pierce their own skin with a medical needle, and thus encounter difficulties in correct needle placement for proper administration of the medication. Such difficulties can be attributable to insufficient manual dexterity or skill to achieve proper needle placement or, alternately to, anxiety associated with anticipated discomfort as the needle pierces the skin. This problem can be especially significant with medications delivered via a subcutaneous flexible insertion set, since incorrect placement can cause kinking of the cannula and resultant obstruction of medication flow to the patient. Cannula kinking can be due to insertion set placement at an incorrect angle relative to the patient's skin, and/or needle placement with an incorrect force and speed of insertion.

The present invention relates to an automatic injector, particularly for use with a subcutaneous insertion set, for quickly and easily placing an insertion needle through the skin of a patient at the correct insertion angle, and with a speed and force of insertion which minimizes patient discomfort.

SUMMARY OF THE DISCLOSURE

It is an object of an embodiment of the present invention to provide an improved insertion device and insertion set, which obviates for practical purposes, the above mentioned limitations.

According to an embodiment of the invention, an injector is provided for quick and easy transcutaneous placement of a medical needle through the skin of a patient, particularly such as an insertion of a subcutaneous insertion set. The injector is designed to place the needle through the skin at a selected insertion angle and with a controlled force and speed of insertion, to ensure proper needle placement with minimal patient discomfort. The injector is particularly designed to meet these objectives, while safeguarding against undesired projection of the medical needle through free space, in the event that the injector is actuated in spaced relation to the patient's skin.

The injector comprises a spring-loaded plunger having a head for receiving and supporting an insertion set in a position with an insertion projecting outwardly for transcutaneous placement through the skin of a patient. The plunger is designed for retraction and retention within a barrel to a cocked position with a drive spring compressed in a manner applying a predetermined spring force to the plunger head. A front or nose end of the injector barrel is designed for pressed placement against the skin of a patient, at a selected needle insertion site, and in an orientation with the needle disposed at a correct or desired insertion angle. A trigger member is operable to release the plunger and thereby permit the drive spring to carry the insertion set toward the patient's skin with a controlled force and speed, resulting in proper transcutaneous placement of the insertion needle with minimal patient discomfort.

The plunger head includes a safety lock mechanism to retain the insertion set against projection from the injector barrel. In one preferred form, the safety lock mechanism comprises at least one and preferably a pair of safety lock arms for engaging and retaining the insertion set when the plunger is retracted from a fully advanced position. Each safety lock arm includes a cam lobe for engaging an appropriately shaped recess on the insertion set to prevent release thereof from the plunger head, unless and until the plunger head is returned to the fully advanced position. In such fully advanced position, the shape of the cam lobe permits quick and easy separation of the injector from the insertion set with a minimal separation force.

In operation, the safety lock arms thus prevent projection of the insertion set from the injector, in the event that the trigger member is actuated with the nose end of the barrel spaced from the skin of a patient. In that event, the plunger head is advanced with the controlled force and speed to the fully advanced position, but the insertion set is not thrown from the injector as a projectile. Instead, the insertion set travels rapidly with the plunger head to the fully advanced position, whereat the injector can be separated with minimal separation force from the insertion set.

In an alternative preferred form, the safety lock mechanism comprises a plunger head having a cylindrical shape defining a forwardly open cavity for receiving and supporting an insertion set with the insertion needle and cannula projecting outwardly. In this embodiment, the plunger head includes a radially inwardly projecting rim at a forward or nose end thereof, wherein the rim defines an oval-shaped opening. The size of the rim opening permits relatively free reception of a hub on the insertion set, with the infusion set oriented at an angle relative to a central axis of the plunger head and barrel. The insertion set is then reoriented to align the insertion needle coaxially with the central axis of the barrel and plunger head, so that the rim is received into a recess on the insertion set and functions to retain the infusion set against undesired release from the injector during spring-driven placement of the needle. After needle placement, the injector is released from the insertion set with minimal separation force by orienting the injector angularly relative to the insertion set to permit free slide out passage of the hub through the oval rim opening.

In a further alternative form of the invention, the plunger head is shaped to define a laterally open undercut slot sized for relatively free slide-fit reception of the needle hub of the insertion set. In this version, the insertion set is assembled quickly and easily with the plunger head of the injector by laterally sliding the hub into the laterally open slot, thereby orienting the medical needle generally coaxially relative to the central axis of the injector barrel and plunger head. In this position, the plunger head can be retracted and locked, followed by appropriate trigger member release for transcutaneously placing the medical insertion needle. After the needle is placed on the patient, the injector can be disassembled from the insertion set by laterally sliding the injector relative to the needle hub. Alternatively, the injector can be withdrawn or retracted from the patient's skin to slidably separate the needle from the insertion set which remains in place on the patient's skin.

In other embodiments of the present invention, an insertion device for inserting at least a portion of at least one piercing member of an insertion set through the skin of a patient includes a device housing, a carrier body and a driver. The carrier body is slidably received within the device housing for movement between an advanced position and a retracted position. The carrier body also includes a receiving structure to support the insertion set in a position with the at least one piercing member oriented for insertion through the skin of the patient at a predetermined angle relative to the skin of the patient upon movement of the carrier body from the retracted position to the advanced position. The driver is operatively coupled between the device housing and the carrier body to urge the carrier body with a controlled force and speed from the retracted position toward the advanced position to place at least a portion of the at least one piercing member of the insertion set thorough the skin of the patient to install the insertion set to the patient. The receiving structure of the carrier body is removable from the insertion set while maintaining the installation of the insertion set to the patient.

In particular embodiments, the predetermined angle relative to the skin is about 90 degrees, between 90 degrees and 10 degrees, or is after insertion between 0 and 10 degrees. In additional embodiments, the insertion set is a transuctaneous insertion set, a subcutaneous insertion set, an infusion set, sensor set or the like. In still other embodiments, the insertion set rests mainly on the surface of the skin after insertion or the insertion set is implanted in the skin of the patient. In preferred embodiments, the at least one piercing member is a needle. In alternative embodiments, the at least one piercing member is a plurality of needles, and can also be a plurality of micro-needles. Also, in some embodiments, the insertion set insertion set can be both an infusion set and a sensor set combined into an integral unit.

In yet other embodiments the insertion device, the device housing has a forward end defining a generally planar angled insertion contact surface for placement against the skin of a patient with the device housing in a predetermined orientation relative to the patient's skin that mirrors the predetermined angle relative to the skin of the patient. Other embodiments include a trigger mechanism that actuates the driver. For instance, the trigger mechanism includes at least one trigger for fingertip depression to actuate the driver for movement of the carrier body from the retracted position to the advanced position. In addition, the driver can include at least one spring for spring-loaded movement of the carrier body from the retracted position to the advanced position. Further, the driver can include a force changing mechanism that permits alteration of the controlled force and speed of the carrier body moving from the retracted position to the advanced position from one insertion cycle to another insertion cycle. In still further embodiments, the device housing and the carrier body include a cooperatively engageable track mechanism for guiding movement of the carrier body between the advanced and retracted positions while retaining the carrier body against rotation relative to the device housing.

In additional embodiments of the insertion device, the at least one piercing member is provided with a piercing member hub as part of the insertion set. In addition, the receiving structure of the carrier body includes a recess formed therein for mated slide-fit reception of the piercing member hub of the insertion set. Further, the recess of the receiving structure can include a laterally open undercut recess. Alternatively, the receiving structure may include a safety retainer structure that retains the at least one piercing member on the receiving structure during movement from the retracted position to the advanced position. This safety retainer structure permits separation of the at least one piercing member from the carrier body when the carrier body is in the advanced position.

Yet another embodiment of the present invention is directed to an insertion set for insertion through the skin of a patient by an insertion device. The insertion device has a slidable carrier body for movement between an advanced position and a retracted position. The carrier body of the insertion device including a receiving structure to support the insertion set in a position for insertion through the skin of the patient upon movement of the carrier body from the retracted position to the advanced position. The insertion device also having a driver operatively coupled to the carrier body that urges the carrier body with a controlled force and speed from the retracted position toward the advanced position for insertion of the insertion set thorough the skin of the patient. The insertion set includes at least one piercing member and a set housing. The at least one piercing member includes a portion of the at least one piercing member that is insertable through the skin of the patient. The set housing is coupled to the at least one piercing member. Also, the set housing is shaped to fit within the carrier body of the insertion device to orient the at least one piercing member for placement through the skin of the patient of at least a portion of the at least one piercing member at a predetermined angle relative to the skin of the patient to install the insertion set to the patient. The set housing of the insertion

set is removable from the receiving structure of the carrier body while maintaining the installation of the insertion set to the patient.

In particular embodiments of the insertion set, the predetermined angle relative to the skin is about 90 degrees, between 90 degrees and 10 degrees, or is after insertion between 0 and 10 degrees. In additional embodiments, the insertion set is a transuctaneous insertion set, a subcutaneous insertion set, an infusion set, sensor set or the like. In still other embodiments, the insertion set rests mainly on the surface of the skin after insertion or the insertion set is implanted in the skin of the patient. In preferred embodiments, the at least one piercing member is a needle. In alternative embodiments, the at least one piercing member is a plurality of needles, and can also be a plurality of microneedles. Also, in some embodiments, the insertion set can be both an infusion set and a sensor set combined into an integral unit.

Other features and advantages of the invention will become apparent from the following detailed description, taken in conjunction with the accompanying drawings which illustrate, by way of example, various features of embodiments of the invention.

BRIEF DESCRIPTION OF THE DRAWINGS

A detailed description of embodiments of the invention will be made with reference to the accompanying drawings, wherein like numerals designate corresponding parts in the several figures.

FIG. **1** is a perspective view illustrating use of an automatic injector embodying the novel features of the invention;

FIG. **2** is an enlarged front elevation view of the injector shown in FIG. **1**;

FIG. **3** is a front or nose end view of the injector, taken generally on the line **3**—**3** of FIG. **2**;

FIG. **4** is an enlarged exploded perspective view illustrating assembly of the injector with a subcutaneous insertion set;

FIG. **5** is a further enlarged longitudinal sectional view taken generally on the line **5**—**5** of FIG. **4**;

FIG. **6** is a transverse sectional view taken generally on the line **6**—**6** of FIG. **5**;

FIG. **7** is an enlarged longitudinal sectional view taken generally on the line **7**—**7** of FIG. **2**;

FIG. **8** is an enlarged and exploded fragmented perspective view illustrating a trigger assembly for use in the injector;

FIG. **9** is a longitudinal sectional view similar to FIG. **5**, and showing the injector with insertion set received therein for transcutaneous placement through the skin of a patient;

FIG. **10** is a transverse sectional view taken generally on the line **10**—**10** of FIG. **9**;

FIG. **11** is a longitudinal sectional view taken generally on the line **11**—**11** of FIG. **9**;

FIG. **12** is a rear end elevation view taken generally on the line **12**—**12** of FIG. **11**, and depicting the trigger assembly in a locked position;

FIG. **13** is an enlarged fragmented longitudinal view similar to a portion of FIG. **11**, but depicting actuation of the trigger assembly for releasing the spring-loaded plunger;

FIG. **14** is a rear end elevation view taken generally on the line **14**—**14** of FIG. **13**, similar to FIG. **12**, but showing the trigger assembly in an unlocked position;

FIG. **15** is a fragmented longitudinal sectional view depicting the spring-loaded plunger in a fully advanced position with the infusion set placed on the patient's skin;

FIG. **16** is an exploded perspective view illustrating separation of the insertion needle from the cannula of the subcutaneous insertion set;

FIG. **17** is a perspective view depicting an alternative preferred form of the invention;

FIG. **18** is a front elevation view of the injector shown in FIG. **17**;

FIG. **19** is a front or nose end view of the injector, taken generally on the line **19**—**19** of FIG. **18**;

FIG. **20** is an enlarged side elevation view of the injector, taken generally on the line **20**—**20** of FIG. **19**;

FIG. **21** is a further enlarged longitudinal sectional view taken generally on the line **21**—**21** of FIG. **17**;

FIG. **22** is an enlarged exploded perspective view illustrating construction details of a plunger and trigger member for use in the injector of FIG. **17**;

FIG. **23** is an enlarged longitudinal sectional view similar to FIG. **21**, and depicting the injector with the trigger member in a cocked position;

FIG. **24** is a fragmented perspective view showing the upper end of the injector depicted in FIG. **23**, with the trigger member in the cocked position;

FIG. **25** is an enlarged and fragmented longitudinal sectional view illustrating actuation of the trigger member;

FIG. **26** is an enlarged and fragmented longitudinal sectional view showing the plunger in a fully advanced position with the infusion set placed on the patient's skin;

FIG. **27** is an enlarged fragmented longitudinal sectional view taken generally on the line **27**—**27** of FIG. **22**, and depicting a portion of the plunger;

FIG. **28** is a front or nose end elevational view of the plunger, taken generally on the line **28**—**28** of FIG. **27**; and

FIG. **29** is an enlarged fragmented longitudinal sectional view illustrating release of the injector from an infusion set placed on the patient's skin;

FIG. **30** is an exploded prospective view generally similar to FIG. **17**, but depicting a further alternative preferred form of the invention, and showing assembly of an insertion set with the illustrative injector;

FIG. **31** is a perspective view similar to FIG. **32**, depicting further assembly of the insertion set with the injector;

FIG. **32** is an enlarged fragmented vertical sectional view taken generally on the line **32**—**32** of FIG. **31**;

FIG. **33** is a perspective view showing use of the injector of FIGS. **30**–**32** for transcutaneous placement of the insertion set; and

FIG. **34** is an exploded perspective view similar to FIG. **33**, and showing use of the injector to separate a medical needle from the installed insertion set.

FIG. **35** is a perspective view of an insertion device with one type of an insertion set in accordance with a second embodiment of the present invention.

FIG. **36** is a bottom perspective view of the insertion device of FIG. **35**.

FIG. **37** is a side plan view of the insertion device and insertion set shown in FIG. **35**.

FIG. **38** is an exploded cross-sectional view of the insertion device and the one type of insertion set as shown along the line **38**—**38** in FIG. **37**.

FIG. **39** is a top perspective view of one type of insertion set for use with the insertion device shown in FIG. **35**.

FIGS. **40***a*–**40***g* illustrate the steps of inserting the one type of insertion set of FIG. **39** with the insertion device of FIG. **35**.

FIG. **41** is a perspective view of an insertion device with one type of an insertion set in accordance with a third embodiment of the present invention.

FIG. **42** is an exploded perspective view of the insertion device shown in FIG. **41**.

FIG. **43** is an exploded side plan view of the insertion device and the one type of insertion set shown in FIG. **41**.

FIG. **44** is an enlarged side plan view of the one type of insertion set held in a carrier body of the insertion device shown in FIG. **41**.

FIG. **45** is a front perspective view of the insertion device and the one type of insertion set shown in FIG. **41**.

FIG. **46** is a cross-sectional view of the insertion device and the one type of insertion set as shown along the line **46**—**46** in FIG. **45**.

FIG. **47** is a top schematic view of an insertion device in accordance with a fourth embodiment of the present invention.

FIGS. **48***a*–**48***d* are cross-sectional views of a force changing mechanism for use with embodiments of the present invention.

DETAILED DESCRIPTION OF THE PREFERRED EMBODIMENTS

As shown in the drawings for purposes of illustration, the invention is embodied in an insertion device for insertion sets such as an infusion set, sensor set, medical device, or the like. Further embodiments of the insertion device may be used to insert other insertion sets or medical devices such as biodegradable implants, capsules, impregnated threads (with medications or the like). Other insertion sets may be directed to a threaded needle insertion set, such as that described in U.S. Pat. No. 5,584,813 issued Dec. 17, 1996 to Livingston et al. entitled "Subcutaneous Injection Set" and U.S. Pat. No. 5,779,665 issued on Jul. 14, 1998 to Mastrototaro et al. entitled "Transdermal Introducer Assembly", which are herein incorporated by reference. In addition, the insertion sets may be coated with medications, or other agents, that inhibit infection and/or promote healing of the insertion site. Preferred embodiments of the insertion device and insertion sets are for transcutaneous placement of the insertion set in subcutaneous tissue. However, in alternative embodiments, the insertion set may be inserted into other subdermal tissues. In addition, still further embodiments may be used to place the sets in other types tissue, such as muscle, lymph, organ tissue or the like, and used in animal tissue. In preferred embodiments of the present invention, the insertion device is loaded with a standard hand-held insertion set, or the like, and then placed against the skin of the user, where the insertion device is activated to transcutaneously place a portion of the insertion set, or the like, subcutaneously in a quick manner that minimizes pain and/or discomfort to the user. However, it will be recognized that further embodiments of the invention may be used to place an entire insertion set, or the like, beneath the skin, rather than just a portion of the insertion set. As discussed, preferred embodiments of the insertion device are designed to accommodate off-the-shelf insertion sets, or the like. But, alternative embodiments may be used with customized insertion sets, or the like that have been altered to fit the insertion device in a particular orientation or configuration to improve safety and/or assure proper placement of the insertion set, or the like. In still other embodiments, the insertion sets, or the like may be angled and the devices are capable of insertion at angles between 0 and 90 degrees relative to the skin surface after insertion of the insertion set.

In preferred embodiments, the insertion set includes at least one piercing member to pierce the skin during insertion. In particular embodiments, the piercing member is a metal needle. In alternative embodiments, the needle may be hollow, solid, half needle (or other fraction), or the like. In further alternative embodiments, the piercing member may be made out of other materials, such as ceramic, plastic, composites, silicon micro-needles, biodegradable, hydrophillic substances, substances that soften and/or change once in contact with the body and/or bodily fluids, or the like. In other alternative embodiments, the insertion set may include more than one piercing member. For example, a single insertion set may include a piercing member for an infusion portion and another piercing member for a separate sensor portion, or the like. Alternatively, the insertion set may include a plurality of small piercing members on a small patch or substrate, such as a series of hollow micro-needles (such as from silicon, plastics, metal or the like) for infusion of a medication or a series of solid micro-needles for sensor applications (such as from silicon, plastics, metal or the like), which micro-needles are used to penetrate the skin.

As shown in the exemplary drawings, an injector (or insertion device) in accordance with a first embodiment of the present invention is referred to generally by the reference numeral **10** is provided for quick and easy transcutaneous placement of a medical needle, particularly such as an insertion needle **12** of the type provided with a subcutaneous insertion set **14** as depicted in FIGS. **4** and **7**. The injector **10** includes a trigger-type actuator mechanism for transcutaneous placement of the insertion needle **12** with a controlled speed and force, and with the insertion needle **12** oriented at a desired angular position relative to the skin **16** (FIGS. **1** and **9**) of the patient.

The automatic injector **10** of the present invention, as shown in the illustrative drawings, is particularly designed for placement of the insertion needle **12** of a subcutaneous insertion set **14**, such as an insertion set of the general type shown and described in U.S. Pat. Nos. 4,755,173; 5,176,662; and 5,257,980, which are incorporated by reference herein. Such insertion sets **14** are used to infuse medical fluids such as selected medications to a patient, with one example being the administration of insulin to a diabetic by operation of a programmable medication infusion pump (not shown) of the type described in U.S. Pat. No. 4,685,903. Alternatively, the injector **10** may be used to transcutaneously place a medical needle associated with other types of insertion sets, such as transcutaneous sensor insertion sets of the general type shown and described in U.S. Pat. Nos. 5,390,671; 5,560,806 and 5,586,553, which are also incorporated by reference herein. Such insertion sets are used, for example, to monitoring patient glucose levels.

As shown best in FIG. **4** with respect to an insertion set **14** for infusing medical fluids to a patient, the insertion needle **12** is connected to a hub **18** at a rear or proximal end thereof, and protrudes through a housing **20** of the insertion set **14**, wherein the housing **20** defines an internal chamber (not shown) for receiving medication via infusion tubing **22**. An enlarged base, typically in the form of resilient or flexible wings **24**, is provided on the housing **20** for stable affixation to the skin **16** of a patient. The insertion needle **12** protrudes downwardly through the housing **20** and the winged base **24** to extend through a soft and flexible cannula **26**. The insertion needle **12** is provided for transcutaneous placement of the cannula **26**, after which the insertion needle is retracted from the set **14** (FIG. **16**) to permit medication delivery through the cannula **26** to the patient.

The injector **10** of the present invention represents a simple device which can be used by the patient to quickly and easily place the subcutaneous insertion set **14** in a proper transcutaneous position and orientation, at a selected medication insertion site. The injector **10** is designed to project the insertion set toward the patient's skin **16** at a controlled force and speed for quickly piercing the skin in a manner insuring proper placement of the insertion needle **12** and cannula **26**, while minimizing patient anxiety and/or discomfort. Improper and/or partial placement of the insertion needle **12** is thus avoided.

In general terms, as shown in one preferred form is FIGS. **1**–**5**, the injector **10** comprises a cylindrical forward barrel **28** (or device housing) having a plunger **30** (or carrier body) mounted therein for longitudinal sliding movement within a hollow bore between a forward advanced position (FIG. **5**) and a rearward retracted position (FIG. **9**). The plunger **30** has a head **32** at a forward end thereof for releasibly receiving and retaining the subcutaneous insertion set **14**, in a manner to be described in more detail. A rear end of the plunger **30** cooperates with a trigger-type actuator assembly **34** mounted on the rear end of the barrel **28**. The trigger actuator assembly **34** (or driver) is adapted to hold the plunger **30** in a retracted position, against the force of a compressed drive spring **36**. A trigger button **38** of the actuator assembly **34** is adapted for fingertip depression to release the plunger **30** for spring-loaded travel toward the advanced position, and corresponding transcutaneous placement of the insertion needle **12** through the patient's skin.

FIGS. **2**–**5** illustrate construction details of the injector barrel **28**, wherein the forward or nose end thereof defines a flat and generally planar surface for placement against the skin of a patient (FIG. **1**) with a longitudinal axis of the barrel **28** oriented generally perpendicular to the patient's skin **16**. The barrel **28** has a size and shape for substantially mated sliding fit reception of the infusion set **14**, with the insertion needle **12** and related cannula **26** projecting in a direction for placement on a patient. In this regard, the nose end of the barrel **28** defines an opposed pair of relatively wide and open-ended cut outs **40** for slide-fit reception of the oppositely projecting base wings **24**. A narrower slot **42** is also formed in the barrel nose end, at a location for slide-fit reception of the infusion tubing **22** attached to the infusion set **14**. Thus, the forward or nose end of the barrel **28** accommodates sliding reception of the subcutaneous insertion set **14** therein for movement along the cut outs **40** and the slot **42** between the advanced position (FIG. **5**) disposed substantially at the forwardmost end of the barrel **28**, and the retracted position (FIG. **9**) with the base wings **24** and infusion tubing **22** positioned substantially at the inboard ends of the cut outs **40** and the associated slot **42**.

The plunger **30** includes the head **32** of generally cylindrical shape for slide-fit reception within the injector barrel **28**. A forward end of the head **32** includes a cylindrical counterbore recess **44** for receiving the hub **18** and housing **20** of the insertion set **14**, with the enlarged base wings **24** fitted against a pair of outwardly protruding backstop flanges **46** adapted for slide-fit reception within the cut outs **40** in the barrel nose end. A pair of track arms **48** (FIG. **5**) protrude rearwardly from the plunger head **32** and include out-turned latch fingers **50** for guided reception within longitudinally extending track slots **52** formed in the barrel **28** at a location spaced aft from the barrel nose end. These track arms **48** thus cooperate with the barrel track slots **52** to guide the plunger **30** between the advanced position (FIGS. **5** and **7**) and the retracted position (FIG. **9**).

The plunger **30** also includes a central drive stem **54** (FIG. **5**) which protrudes rearwardly from the plunger head **32** within the barrel interior. The rearward end of the drive stem **54** is longitudinally split to define a pair of trigger arms **56** which have out-turned trigger fingers **58** on the rearward ends thereof.

The trigger-type actuator assembly **34** is mounted on the rearward end of the injector barrel **28**, and generally functions to releasibly retain the plunger **30** in a retracted and cocked position, ready for rapid and spring-loaded actuation upon depression of the trigger button **38** to place the insertion set **14** on the patient. More particularly, as shown best in FIGS. **5**–**9**, the trigger assembly **34** comprises a main support cap **60** having a mounting sleeve **62** protruding in a press-fit and preferably adhesively connected manner into the rear or aft end of the injector barrel **28**. The drive spring **36** comprises a coil spring positioned about the drive stem **54** on the plunger **30** and reacts between a rearward face **64** of the plunger head **32**, and a shoulder **66** on the support cap **60**. The drive spring **36** normally biases the plunger **30** toward the advanced position (FIGS. **5** and **7**). However, an insertion set **14** seated in the plunger head **32** can be pressed rearwardly against the plunger **30** to move the plunger to the retracted position, as viewed in FIG. **9**, with the trigger fingers **58** passed through a conical or tapered latch bore **68** formed in the support cap **60** to engaging a shoulder **70** on an opposite side of the support cap **60**. In this regard, the trigger fingers **58** have ramped outboard faces to accommodate movement of the fingers **58** radially toward each other as they pass through the latch bore **68**. When the trigger fingers **58** pass entirely through the bore **68**, the spring resilience of the trigger arms **56** is sufficient to spread the trigger fingers **58** so that they engage the shoulder **70**. In this retracted plunger position, the drive spring **36** is retained in a compressed and cocked condition, with the insertion set **14** including the insertion needle **12** and related cannula **26** withdrawn into the interior of the barrel **28**, in spaced relation to the patient's skin **16**.

The trigger actuator assembly **34** additionally includes an actuator pin **72** mounted within a noncircular bore **74** (FIGS. **6** and **7**) formed in the support cap **60** for longitudinal sliding movement through a short stroke, relative to the plunger **30**. In this regard, the actuator pin **72** includes one or more noncircular lands **76** for slide-fit reception within the bore **74**, to prevent actuator pin rotation therein. The actuator pin **72** is held within the bore **74** by a stepped lock ring **78** which is retained against a rearward end of the support cap **60** by a press-fit outer retainer sleeve **80** having an inturned rim **82** at the rearward end thereof. Importantly, as shown best in FIG. **8**, an oblong land **84** is formed on the actuator pin **72** for mated slide-fit reception through an oblong recess **85** formed in the lock ring **78**. A return spring **86** (FIG. **7**) is carried within the support cap bore **74** and reacts between the shoulder **70** and a nose end of the actuator pin **80** for biasing the actuator pin **80** rearwardly within the support cap.

The rearmost end of the actuator pin **72** defines the trigger button **38**. As shown in FIGS. **11** and **13**, the trigger button **38** can be depressed with a fingertip to move the actuator pin **72** through a short stroke against the return spring **86** in a direction toward the trigger fingers **58** at the rear end of the plunger **30**. As shown best in FIG. **13**, the actuator pin **72** has a hollowed cylindrical forward tip **88** with a diametric size for engaging and squeezing the trigger fingers **58** together at the rear end of the plunger **30**, in a manner enabling those trigger fingers **58** to pass back through the tapered conical latch bore **68**. As soon as the trigger fingers **58** thus release

from engagement with the shoulder **70** on the support cap **60**, the drive spring **36** translates the plunger **30** with the insertion set **14** thereon with a rapid and controlled force and speed toward the advanced position, resulting in transcutaneous placement of the needle **12** and cannula **26**, as viewed in FIG. **15**. Importantly, the spring rate characteristics of the drive spring **36** and the distance of plunger stroke are chosen for a substantially optimized and proper transcutaneous placement of the needle **12** and cannula **26**, all in a manner which minimizes patient discomfort during the needle placement procedure. Moreover, by forming the nose end of the injector barrel **28** with a squared-off shape as shown, the injector **10** can be easily oriented substantially perpendicular to the skin **16** for proper placement of the insertion set.

Depression of the actuator pin **72** by means of the trigger button **38** requires the lock ring **78** to be rotatably oriented in a position aligning the oblong recess **85** therein with the oblong land **84** on the actuator pin. Accordingly, when these oblong structures are rotationally aligned (FIGS. **13**–**14**), the injector **10** is armed for trigger button depression and corresponding release of the retracted and cocked plunger. However, the lock ring **78** can be rotated relative to the actuator pin **72** to misalign these oblong structures, as shown in FIGS. **9**–**12**, whereupon the actuator pin **72** is locked in a rearward position against depression and actuation. A set pin **90** on the lock ring **78** may be provided and received within an accurate notch **92** formed in the retainer sleeve flange rim **82**, to permit lock ring rotation back-and-forth through a part circle increment, on the order of about 90 degrees. Appropriate indicia may be applied to the retainer sleeve rim **82**, such as the letter "L" for "locked" and the letter "A" for "armed", as viewed in FIGS. **12** and **14**, to provide a visual indication of the setting of the trigger assembly **34**.

In accordance with one aspect of the invention, the plunger head **32** additionally includes a safety lock mechanism in the form of a pair of safety lock arms **94** pivotally carried in narrow slots **96** formed in the plunger head **32**. These safety lock arms **94** have rearward ends connected to the head **30** by pivot pins **98**, and forward ends defining contoured lock fingers **100** which protrude into the plunger head recess **44**. As shown in FIG. **7**, the safety lock arms **94** and their associated lock fingers **100** have a size and shape so that the fingers **100** can engage and retain the hub **18** of the insertion set **14**, for example, by fitting into a recess **101** defined between the hub **18** and housing **20** of the insertion set. Importantly, the locations of the lock arm pivot points are chosen to insure that the lock arms **94** engage and retain the insertion set **14** whenever the plunger **30** is moved from the advanced position (FIG. **7**) toward and to the retracted position (FIG. **9**). When the plunger **30** reaches the fully advanced position, the safety lock arms **94** including their respective pivot pins **98** are disposed within the wide cut outs **40** and are therefore free to swing outwardly, relative to the insertion set **14**, to accommodate separation of the insertion set from the injector **10** with a substantially minimum separation force. This configuration has been found to be highly effective as a safeguard to prevent the insertion set **14** from being thrown as a projectile from the injector **10**, in the event that the trigger assembly **34** is activated without prior placement of the injector **10** firmly against the patient's skin **16**. In use, the subcutaneous insertion set **14** can be placed quickly and easily into the open nose end of the injector barrel **28**, within the recess **44** formed in the plunger head **32**. Such assembly of the insertion set **14** with the injector **10** requires simple alignment of the base wings **24** and infusion tubing **22** with the appropriate cut outs and slots **40**, **42** formed in the nose end of the barrel **28**. The insertion set **14** and plunger **30** can then be manually retracted rearwardly, against the drive spring **36**, to the retracted position with the plunger **30** cocked and latched as viewed in FIGS. **9** and **11**. The injector **10** can then be placed firmly against the patient's skin **16**, with the insertion set **14** supported in the proper orientation and at a predetermined distance from the skin **16**. Simple depression of the trigger button **38** releases the cocked plunger **30** for spring-loaded travel rapidly albeit with a controlled speed and force of insertion, to ensure penetration of the patient's skin with minimal discomfort, and in a manner which properly places the insertion needle and cannula. The safety lock arms **94** prevent accidental projection of the insertion set **14** through free space, in the event that the trigger button **38** is prematurely depressed. When the insertion set **14** is properly placed, however, the safety lock arms **94** release from the insertion set with minimal force, for easy separation of the injector **10** from the insertion set **14**.

In preferred embodiments, the controlled speed and force of the insertion device is obtained by selecting a spring constant of a spring to propel and insert the insertion set at the proper speed and force to ensure penetration with minimal discomfort. In alternative embodiments, as shown in FIGS. **48***a*–**48***d*, there is the need to vary the speed and force, from one insertion cycle to the next, to accommodate different insertion sets (such as finer needles, sensor sets fragility or the like) and insertion site conditions (such as overweight, underweight, children or the like). As shown in FIG. **48***a*, a force changing mechanism **1000** having a spring **1002** enclosed in a sealed compartment **1004** is used with a set (or adjustable) orifice **1006** to allow equalization of internal and ambient pressures during the insertion stroke of the insertion device. The sealed compartment **1004** includes sealing O-rings **1008** and **1010** to seal the sealed compartment **1004**. The O-ring **1008** seals the insertion set carrier body **1012**, and the O-ring **1010** seals the actuator housing **1014** (which contains the orifice **1006**) of the force generating mechanism **1000**. The force changing mechanism **1000** may be activated by, for example, a trigger **1016** that is biased by a spring **1018** to close off the orifice **1006** until depressed. The limiting flow through the office **1006** acts as a dampening force, counteracting the spring force from the spring **1002**, thereby allowing control of insertion speed and force. The orifice size can be adjustably attained through a number of approaches, such as bearing **1020** and spring **1022** that blocks the orifice **1006** and resists air flow based on the tension of the spring **1022** on the bearing **1020** (see FIG. **48***b*); while presenting a lower resistance during retraction as the air contained in the sealed compartment **1004** is compressed, forcing bearing **1020** against spring **1022** to unseat the bearing **1022** from the orifice **1006** to present the maximum orifice size for escaping air during compression of spring **1002**. This structure minimizes the force needed to compress spring **1022** by allowing air in the sealed compartment **1004** to escape freely and quickly through the orifice **1006**; rather than be compressed within the sealed compartment **1004** because the orifice **1006** is restricted by bearing **1002**. In another alternative, as shown in FIG. **48***c*, a disk **1024** has a plurality of various sized holes **1026**(**1**) to **1026**(n). The disk **1024** is rotateable over the orifice **1006** to sequentially obstruct, completely obstruct or partially obstruct the orifice **1006** flow path and changes the effective size of the orifice **1006** by blocking the orifice **1006** with the various sized holes **1026**(**1**) through **1026**(n). In another embodiment, as shown in FIG. **48***d*, a tapered valve plug **1028** is threaded into position relative to the orifice **1006** to

change the effective size of the orifice **1006**. Other orifice **1006** size changing methods may be used. In addition, other methods of controlling the insertion speed and force may be used, such as controlled friction, change in spring tension, hydraulics, pneumatics or the like may be used.

Following separation of the injector **10** from the placed insertion set **14**, the insertion needle **12** can be withdrawn quickly and easily from the cannula as viewed in FIG. **16**. Thereafter, the insertion set **14** can be used in a normal manner to deliver a selected medication through the infusion tubing **22** and cannula **26** to the patient.

An alternative preferred form of the invention is shown in FIGS. **17**–**29**, wherein components corresponding in structure and function to those described previously with respect to FIGS. **1**–**16** are identified by common reference numerals increased by 100. The embodiment of FIGS. **17**–**29** show a modified injector **110** constructed from a reduced number of parts and including an alternative safety lock mechanism for preventing undesired projection of the insertion set **14** through free space in the event of injector operation without placing the nose end thereof firmly against the skin **16** of a patient. However, the alternative safety lock mechanism again permits quick and easy separation of the injector **110** from the insertion set **14**, with minimal separation force. Once again, although an insertion set for infusing medical fluids to a patient will be shown and described, it will be understood that alternative insertion sets such as transcutaneous sensor insertion sets and the like as previously referenced herein may be used with the injector **110**.

In general, the modified injector **110** comprises a plunger **130** and a trigger-type actuator **134** assembled with a generally cylindrical hollow barrel **128**. The plunger **130** has a generally cylindrical plunger head **132** which defines a counterbore recess **144** for receiving and retaining the hub **18** of the infusion set **14**. As shown best in FIGS. **27**–**29**, a radially inwardly projecting rim **202** is formed on the plunger head **132** generally at a leading or nose end of the recess **144**, wherein this rim **202** has a noncircular and preferably oval or elliptical shape (FIG. **28**) to accommodate reception of the hub **18** into the recess **144** provided that the hub **18** is oriented angularly relative to a central longitudinal axis of the plunger **130** and barrel **128**. Similar angular orientation of these components accommodates quick and easy separation thereof. However, when the insertion set **14** is oriented with the medical needle **12** aligned coaxially with the barrel center axis, a portion of the rim **202** projects into the insertion set recess **101** to prevent release of the insertion set **14** from the injector **110**.

More specifically, with reference to FIGS. **17**–**20**, the barrel **128** again has a forward or nose end defining a flat and generally planar surface for firm placement against the skin of a patient. The nose end of the barrel **128** has a pair of relatively wide and generally opposed cut outs **140** formed therein for slide-fit reception of the base wings **24** of the insertion set **14**, in combination with a narrower slot **142** for slide-fit reception of the infusion tubing **22**. This slot **142** may be formed in one or both sides of the barrel nose end.

The plunger **130** is slidably fitted into the barrel **128** for movement between an advanced position shown in FIGS. **17**, **18**, **20** and **21**, and a retracted position shown in FIG. **23**. The plunger **130** includes the modified plunger head **132** of generally cylindrical shape, formed preferably to include a shallow notch or groove **133** in one side thereof for slide-fit reception of the infusion tubing **22** on the insertion set **14**. In this regard, the plunger head groove **133** is formed in a position aligned with the narrow slot **142** in the nose end of the barrel.

The plunger head **132** is formed integrally with a drive stem **154** which projects rearwardly within the barrel interior. As shown best in FIG. **22**, the drive stem **154** is flanked by and formed integrally with a pair of rearwardly projecting track arms **148** which have latch fingers **150** formed at the rear ends thereof. As shown in FIGS. **21** and **23**, these latch fingers **150** are received slidably within longitudinally extending track slots **152** formed in the barrel **128**, and function to guide the plunger **130** between the advanced and retracted positions. Cushioning material (not shown) may be included at the leading ends of the track slots **152** to form a combined stop upon spring driver advancing motion of the plunger **130**, as will be described.

The plunger **130** additionally includes a pair of trigger arms **156** which project generally rearwardly from a rear end of the drive stem **154** and have out-turned trigger fingers **158** at the rear ends thereof (FIG. **22**). These trigger fingers **158** are adapted and sized for partial radial compression toward each other as they ride within the barrel base when the plunger **130** is displaced from the advanced position (FIG. **21**) to the retracted position (FIG. **23**). As the retracted position is reached, the trigger fingers **158** are spring-loaded by the resiliency of the trigger arms **156** to move outwardly for partial reception into relatively short trigger slots **159** formed in the barrel **128**. In this position, as shown in FIG. **23**, the triggers fingers **158** retain the plunger **130** in the retracted position.

A drive spring **136** is mounted within the barrel **128** to react between the trigger-type actuator **134** and the plunger **130**, in the same manner as previously described with respect to FIGS. **1**–**16**. In this regard, the trigger actuator **134** comprises a generally cylindrical actuator sleeve **188** mounted slidably within the barrel **128** at the rear or upper end thereof. This actuator sleeve **188** has a tapered or ramped leading edge face **188'** (FIGS. **22**, **23** and **25**) for engaging matingly shaped ramped outer faces of the trigger fingers **158**, to radially compress the trigger arms **156** and release the plunger **130** for spring-loaded travel from the retracted and cocked position to the advanced position. A trigger button **138** is formed integrally with the actuator sleeve **188** and is exposed for fingertip depression at the rear or top of the barrel **128** to move the actuator sleeve **188** into releasing engagement with the trigger fingers **158**.

As shown best in FIGS. **22** and **24**–**26**, the triggers button **138** extends through an opening formed in the rear of the barrel **128**, generally within a lock sleeve **178** formed integrally with the barrel **128**. The lock sleeve **178** defines an oppositely formed pair of guide slots **192** for aligned reception of a pair of outwardly radiating lock tabs **184** formed on the trigger button **138**. When the tabs **184** and rotationally aligned with the guide slots **192**, the trigger button **138** can be depressed to actuate the spring-locked plunger, as described. However, the lock tabs **184** have sufficient length to permit fingertip rotation of the actuator **134** to re-position the tabs **184** within shallow lock grooves **193** formed adjacent the guide slots **192**. When the tabs **184** are seated in the lock grooves **193**, the lock sleeve **178** blocks depression of the triggers button **138** and thereby locks the injector **110** against actuation. Return rotation of the actuation **134** to re-align the tabs **184** with the guide slots **192** is required before the injector can be activated.

In accordance with one aspect of the invention, the plunger head **132** includes the safety lock mechanism in the form of the noncircular rim **202** at the leading end of the recess **144** in the plunger head. As shown in FIGS. **27** and **28**, the rim **202** has a generally elliptical shape defining a major axis that is greater than the diameter of the hub **18** on

the insertion set **14**, and a minor axis that is less than the hub diameter. With this geometry, and by providing sufficient axial depth to the plunger head recess **144**, the hub **18** can be fitted into the plunger head by angularly orienting the components to permit slide-fit of the hub **18** through the major axis portion of the rim **202**. Subsequent re-orientation of the components to align the medical needle **12** generally coaxially with plunger head **32** enables the minor axis portion of the rim **202** to project into the insertion set recess **101**, thereby locking the components together. Thereafter, when the insertion set **14** is placed on the patient (FIG. **29**), the components are easily separated by lifting the injector **110** off the insertion set **14** at the same angle to allow the hub **18** to press freely through the major axis center of the rim **202**. Importantly, such engagement and disengagement of the components occurs with essentially no resistance force to separation. The infusion set **14** can be oriented angularly relative to the plunger **130** only when the plunger is in the advanced position, with the adjacent barrel **128** precluding such angular orientation when the plunger **130** is moved rearwardly from the restricted position.

In an alternative mode of operation, subsequent to actuation of the injector **110** to place the insertion set **14** of the patient, the injector **110** can be simply withdrawn or retracted in a direction away from the patient's skin **16**, in which case the rim **202** at the nose end of the plunger head **132** will engage the needle hub **18** and thereby gently withdraw the medical needle **12** from the insertion set **14**, In this manner, the needle **12** is retracted from the cannula **26** which remains at the desired transcutaneous insertion site.

A further alternative preferred form of the invention is shown in FIGS. **30**–**34**, wherein a further modified injector **210** is constructed and operated generally as shown and described in FIGS. **17**–**29**, but wherein an alternative configuration for a plunger head **232** is provided. FIGS. **30**–**32** show the injector **210** with the plunger head **232** in the advanced position within the front or nose end of the barrel **128** which includes the wide cut outs **140** and the narrow slot **142** for respective slide-fit reception of the base wings **24** and the tubing **22** of the insertion set **14**. As shown, the modified plunger head **232** has a laterally open recess **244** formed therein of undercut geometry and laterally exposed through the cut outs **140** when the plunger is in the advanced position. The insertion set **14** can be slide-fit assembled with the plunger head **232**, by fitting the hub **18** into the wider upper region of the recess **144**, with an inturned rim **302** at the leading end of the plunger head fitting into the insertion set recess **101**. A laterally open gap **303** (FIG. **34**) in the rim **302** permits slide-fit reception of the hub **18** into the recess **244**, and a short carrier post **304** (FIG. **32**) may be provided at the base of the recess **244** to seat within a shallow detent in the top of the hub.

With the insertion set **14** assembled with the plunger head **232**, as viewed in FIG. **32**, the plunger can be retracted and cocked as previously shown and described with respect to FIGS. **17**–**29**. The cut outs **140** and slot **142** accommodate sliding movement of the insertion set **14** with the plunger **232** during such retraction. Thereafter, the front or nose end of the injector **210** can be placed firmly against the patient's skin (FIG. **33**) and the trigger button **138** depressed to release the plunger so that the medical needle **12** is transcutaneously placed with the controlled drive force and speed. During forward drive motion of the plunger, the forward rim **302** on the plunger head **232** prevents projectile release of the insertion set. After placement of the insertion set on the patient, the injector **210** can be laterally displaced relative to the insertion set for quick and easy separation therefrom. Alternately, as viewed in FIG. **34**, the injector **210** can be withdrawn or retracted from the insertion set **14** to slidably withdraw the medical needle **12** while leaving the insertion set in place on the patient.

FIGS. **35**–**40***g* illustrate an insertion device **500** in accordance with a second embodiment of the present invention. The insertion device **500** includes a barrel **502** (or device housing) having a surface seat **501** and an assembly port **503**, a carrier body **504** (or plunger or the like) having an assembly rim **505** and a seating flange **506**, a drive spring **507** (or driver), a release button **508**, and dual spring triggers **510** and **512**. As shown in FIG. **35**, the barrel **502** performs as a housing to hold the carrier body **504**. The carrier body **504** is connected to the barrel **502** by the carrier body being inserted through an opening in the surface seat **501** of the barrel **502**, and then passing the assembly rim **505** of the carrier body **504** through the assembly port **503** of the barrel **502**. The section of the carrier body **504** with the assembly rim **505** compresses slightly, as it passes through the assembly port **503**, due to the presence of compression slots **509**, and then essentially restores to its original shape to prevent the carrier body **504** from sliding out of the barrel **502**, since the assembly rim **505** of the carrier body engages with the assembly port **503** of the barrel **502**.

The carrier body **504** is driven to an advanced position from a retracted position by the drive spring **507** and held in the retracted position (or released to move to the advanced position) by the trigger buttons **510** and **512**. This embodiment of the insertion device **500** is primarily adapted for insertion of insertion sets **400** (as exemplary shown in FIG. **39** as an infusion set), or the like, that are inserted with the piercing member **402** (or needle) at 90 degrees (or perpendicular) to the skin surface after insertion. In preferred embodiments, the carrier body **504** is permanently coupled to the barrel **502** and new insertion sets **400** are attached to the carrier body **504** for each new insertion. However, in alternative embodiments, the carrier body **504** may be a disposable that is replaced after each insertion so that, for instance, a carrier body **504** may be shipped with a pre-installed insertion set **400** and then loaded into the barrel **502** of the insertion device **500**.

The insertion device **500** features a low profile compact package that tends to minimize the effects of hand movement during insertion of the insertion set **400**. In this embodiment, the release button **508** is depressed to release the insertion set **400**, or the like, from the carrier body **504** of the insertion device **500**; rather than engaging or disengaging the insertion set **14** using a lateral slot as shown in FIGS. **31**–**34** above. The release button **508** can be used before or after insertion of the insertion set **400**, or the like. To facilitate insertion of an insertion set **400**, or the like, the insertion device **500** utilizes dual trigger buttons **510** and **512**, which provide an extra margin of safety and substantially prevents accidental activation of the insertion device **500** upon contact with the skin surface. This obviates the need for a lock and unlock position on the activation buttons (or triggers) of the earlier insertion devices shown in FIGS. **1**–**34**. The insertion device **500** also includes another rim on the carrier body **504** that forms the seating flange **506** to hold a rim **404** (or wing) of the insertion set **400**, or the like, that carries an adhesive **406** for adhering the insertion set **400** to the surface of the skin. Upon activation of the insertion device **500** to move the carrier body to the advanced position, the seating flange **506** presses the adhesive **406** and rim **404** of the insertion set **400** firmly against the skin surface to provide positive seating and attachment of the insertion set **400** to the skin. This may make it unnecessary

to require placement of an additional adhesive patch prior to or after inserting an insertion set **400** to secure the insertion set **400** at the insertion site. The insertion device **500** further includes an automatic release of the piercing member (or needle) hub **408** and piercing member **402** (or needle) from the insertion set **400**, or the like, after the insertion set **400**, or the like, has been inserted. This permits the insertion set **400** to be left on the skin surface without the piercing member hub **408** and piercing member **402** (or needle) remaining by simply removing the insertion device **500** from the skin surface. This automatic release feature also minimizes potential patient contact with the piercing member **402** (or needle) of the insertion set **400**, or the like.

In preferred embodiments, the insertion set **400**, or the like, is adapted to tightly fit within a cavity **514** (or receiving structure) of the carrier body **504**. The cavity **514** of the carrier body **504** includes guides **516** to orient the insertion set in a particular orientation and an expansion member **518** in the center bottom interior of the cavity **514** of the carrier body **504** to engage with the piercing member hub **408** (or needle hub) of the insertion set **400**, or the like. The piercing member hub **408** of the insertion set **400**, or the like, includes a center section **410** that engages with the expansion member **518** with a slight interference fit. The interference fit expands the center section **410** of the piercing member hub **408** slightly to expand and press the piercing member hub **408** against the sides of the cavity **514** of the carrier body **504** to firmly secure the insertion set **400**, or the like, within the cavity **514** of the carrier body **504**. The tight fit of the insertion set **400**, or the like, in the carrier body **504** substantially prevents the insertion set **400**, or the like, from being dislodged when the insertion device **500** is activated to improve insertion of the insertion set **400**, or the like, on the skin. However, the tight fit also prevents the insertion set **400**, or the like, from being ejected if the insertion device **500** is inadvertently activated when it is not pressed against the skin surface. In preferred embodiments, the insertion device **500** is configured to have guides **516** and an expansion member **518** to work with existing insertion sets **400**, or the like. However, in alternative embodiments, the insertion set **400**, or the like, may be modified to have a piercing member base, housing or the like that includes slots (not shown) for receiving guides and expanding members of the insertion device **500** to improve the connection between the insertion device **500** and the insertion set **400**, or the like. In further alternative embodiments, the guides and expansion members may be formed on the insertion set **400**, or the like, and the corresponding guide slots and expanding sections may be formed on the insertion device **500**.

The illustrated embodiment employs a dual trigger activation structure to minimize the ability of the insertion device **500** to be unintentionally activated. As illustrated, the barrel **502** of the insertion device **500** includes two outwardly extending guide channels **520** and **522** on the side of the barrel **502**. The guide channels **520** and **522** extend from the base **524** of the barrel **502** up to portal openings **526** and **528** in the side of the barrel **502**. The dual trigger buttons **510** and **512** are carried on opposite sides of the seating flange **506** at the end of the carrier body **504**. Each trigger button **510** and **512** is biased outward from the side of the seating flange **506** by a trigger spring **530** and **532** between the end of the trigger buttons **510** and **512** and the side of the seating flange **506**. When the carrier body **504** of the insertion device **500** is locked in the firing position (or retracted position), the trigger buttons **510** and **512** are pushed out by the trigger springs **530** and **532** to extend out of the portal openings **526** and **528**. In this position, the trigger buttons **510** and **512** extend beyond the bottom of the guide channels **520** and **522**, which prevents the trigger buttons **510** and **512** from moving down the guide channels **520** and **522**. To activate the insertion device **500**, the user must depress both trigger buttons **510** and **512** so that the trigger buttons **510** and **512** can then slide along the bottom of the guide channels **520** and **522**, which in turn allows the carrier body **504** to move down along the barrel **502** until the insertion set **400**, or the like, is inserted. In preferred embodiments, the portal openings **526** and **528** and the end of the guide channels **520** and **522** terminating at the portal openings **526** and **528** are rounded to match the shape of the trigger buttons **510** and **512**. This tends to minimize the resisting pressure on the trigger buttons **510** and **512** during depression of the trigger buttons **510** and **512**. However, in alternative embodiments other portal opening and guide channel end shapes, such as beveled, squared, polygonal, or the like, may be used.

The end of the carrier body **504** having the assembly rim **505** is connected to a release button **508** that can be depressed or slightly extended relative to the carrier body **504**. The release button **508** includes engagement tabs **550** and lock teeth **552** (see FIGS. **35** and **36**) that engage with carrier slots **554** and carrier locks **556** (see FIGS. **36** and **38**) to lock the release button **508** to the carrier body **504**. The lock teeth **552** engage with the carrier locks **556** (see FIGS. **36** and **38**) to permit an amount of movement of the lock teeth **552** along the carrier locks **556** to allow the release button **508** to be depressed to release an insertion set from the carrier body **504**. The release button **508** is also slightly extended away from the carrier body **504** when an insertion set **400** is placed in the interior cavity **514** of the carrier body **504** to permit seating of the insertion set **400**. Engaging the release button **508** with the carrier body substantially prevents the compression slots **509** and assembly rim **505** from compression and inhibits release of the carrier body **504** from the barrel **502** of the insertion device **500**.

The release button **508** is depressed to release the insertion set **400**, or the like, from the carrier body **504** of the insertion device **500**. The release button **508** pushes the insertion set **400**, or the like, out of the cavity **514** of the carrier body **504** sufficiently enough to release the insertion set **400**, or the like, from the guides **516** and the expanding member **518** in the cavity **514** and leave the inserted insertion set **400**, or the like, on the skin. Alternatively, the release button **508** may be activated to release an insertion set **400**, or the like, from the carrier body **504** prior to the insertion set **400**, or the like, being inserted by the insertion device **500**. The release button **508** also includes a ramp portion **534** (or other trigger mechanism) that is adapted to bend or adjust the piercing member hub **408** (or needle hub) of the insertion set **400**, or the like, to allow the piercing member hub **408** and piercing member **402** (or needle) to be released and separated from the insertion set **400**, or the like, when the insertion set **400**, or the like, has been inserted and the insertion device **500** is lifted off the skin. This can be accomplished by separating the elements of the insertion set **400**, or the like, so that only the insertion set, or the like, housing and tubing (or wiring or the like) are left in contact with the skin. The ability to remove the piercing member hub **408** and piercing member **402** is preferably facilitated by the adhesive **406** of the insertion set **400**, or the like, that attaches to the skin to provide sufficient tension to allow for separation of the piercing member hub **408** and the piercing member **402** from the rest of the insertion set **400**, or the like, without dislodging the insertion set **400**, or the like. In preferred embodiments, the insertion device **500** is adapted

to work with an existing piercing member hub **408** on an insertion set **400**, or the like. However, in alternative embodiments, the piercing member hub **408** and the connection between the piercing member hub **408** and the insertion set housing, or the like, is modified to work with the release mechanism of the insertion device **500**.

In preferred embodiments, the release button **508** is biased in position by a plastic or metal spring. However, in alternative embodiments, the release button **508** may be manually reset by engaging and disengaging detents or using other elastomeric materials to bias the release button **508** in position relative to the barrel **502** and the carrier body **504**. In preferred embodiments, pulling up the release button **508** (or extending it away from the assembly port **503** of the barrel **502**) pulls the carrier body **504** to the retracted position in the barrel **502**, where it is locked in place by triggers **510** and **512** engaging the portal openings **526** and **528**. This procedure separates the piercing member hub **408** and piercing member **402** from the housing of the insertion set **400**, or the like. This has the advantage of removing the piercing member **402** and piercing member hub **408** to minimize the opportunity of a user being stuck by the piercing member **402**.

FIGS. **40***a*–**40***g* illustrate one method of insertion of an insertion set **400** with the insertion device **500** in accordance with an embodiment of the present invention. The user first cleans and sterilizes an insertion site on the skin. Next, the user makes sure the insertion device **500** has the carrier body **504** in the advanced position to avoid unintentional activation of the insertion device **500** before placement on the skin. As shown in FIG. **40***a*, the user places the insertion set **400** in the cavity **514** of the carrier body by aligning the tubing (or wire leads or the like) with the slot **536** in the carrier body **504** and the slot **538** in the barrel **502** of the insertion device **500**. The user presses against the piercing member guard **414** (or needle guard) to seat the piercing member hub **408** (or needle hub) and the insertion set **400** in the cavity **514** of the carrier body **504**. As shown in FIG. **40***b*, the user removes the adhesive backing **416** covering the adhesive **406** on the rim **404** of the insertion set **400**. It is preferred that the piercing member guard **414** is not removed at this point to avoid unintentional sticks by the piercing member **402**, and minimize or avoid contact with the adhesive **406**. As shown in FIG. **40***c*, the user presses against the piercing member guard **414** to move the carrier body **504** from the advance position to the retracted position, at which point the trigger buttons **510** and **512** will extend out of the portal openings **526** and **528** to extend beyond the guide channels **520** and **522** to lock the carrier body **504** in the retracted position. Next, as shown in FIG. **40***d*, the user removes the piercing member guard **414** (normally by twisting) to expose the piercing member **402** while maintaining the insertion set **400** within the carrier body **504**. Then, as shown in FIG. **40***e*, the user places the surface seat **501** of the barrel **502** of the insertion device **500** with the insertion set **400** over the insertion site on the skin. The user depresses the two trigger buttons **510** and **512** through the portal openings **526** and **528** sufficiently for the trigger buttons **510** and **512** to slide down along the guide channels **520** and **522** to insert and install the insertion set **400** at the insertion site on the skin. As shown in FIG. **40***f*, the user depresses the release button **508** to release the insertion set from the cavity **514** of the carrier body **504**. Finally, as shown in FIG. **40***g*, the user removes the insertion device **500**, while maintaining installation of the insertion set **400**. In alternative embodiments, the user may extend the release button **508** to lift off the piercing member hub **408** and piercing member **402**, and maintain the remainder of the insertion set **400** at the insertion site on the skin. If the piercing member hub **408** and piercing member **402** are lifted off the device, the user should re-install the piercing member guard **414** prior to removal of the remaining set from the insertion device **500**.

FIGS. **41**–**46** illustrate an insertion device **600** in accordance with a third embodiment that is similar to the insertion devices shown in FIGS. **1**–**34**. The insertion device **600** includes a device housing end **601** and a carrier body **602** that has angled insertion contact surfaces **603** and **604**. The angled insertion contact surfaces **603** and **604** enable the user to properly angle the insertion device **600** to insert an insertion set **700**, or the like, at the proper insertion angle relative to the skin. An insertion set similar to the insertion set **700** is disclosed in U.S. patent application Ser. No. 08/871,831 (PCT Application Serial No. US98/10832) to Van Antwerp et al. entitled "Disposable Sensor Insertion Assembly" or an insertion set that can be inserted at an angle as disclosed in U.S. patent application Ser. No. 09/034,626 to Funderburk et al. entitled "Medication Infusion Set", both or which are herein incorporated by reference. Preferred embodiments of the insertion device **600** have angled insertion contact surfaces **603** and **604** that permit insertion of insertion sets, or the like, that are angled from 89.9 degrees to 25 degrees relative to the skin surface. In further embodiments, the angled insertion contact surfaces **603** and **604** may handle even shallower angles down to approximately 10 degrees relative to the skin surface.

The key is the angled insertion contact surfaces **603** and **604** mirrors the insertion angle of the insertion set **700**, or the like, so that the piercing member **702** (or needle) of the insertion set **700**, or the like, is in axial alignment in the direction of movement of the carrier body **602** of the insertion device **600**. This permits an insertion device designed primarily for use with a 90 degree insertion set, or the like, to be modified to work with angled insertion sets **700**, or the like, by modification of the angle of the angled insertion contact surfaces **603** and **604**. In addition, it is preferred that the piercing member **702** of the insertion set **700**, or the like, be slightly off-center from the center axis of the carrier body **602** to permit easy removal of the insertion device **600** once the insertion set **700**, or the like, has been inserted. Preferred embodiments of the present invention include a carrier body **602** with a receiving structure that includes a recess **606** and bore **608** on one side of the carrier body **602**. The recess **606** is adapted to hold the piercing member hub **704** by a slight interference fit and the bore **608** is adapted to hold the insertion tubing or transmitter hub **706** of the insertion set **700**, or the like. In other embodiments for the insertion sets such as infusion sets with tubing (or sensor sets with wire leads already connected to a sensor) the bore **608** may be open on one side (not shown) to permit insertion and removal of the infusion tubing (or wire leads), but closed of sufficiently to securely hold and grasp the insertion tubing or transmitter hub **706** that connects the tubing or wire leads to the housing of the insertion set **700**, or the like.

FIG. **47** illustrates an insertion device **800** that is adapted for inserting insertion sets, or the like, at angles that are generally less than or equal to 10 degrees relative to the skin surface after insertion of the insertion set, or the like. This embodiment includes a pair of pinchers **802** and **804** that grasps the skin. The pinchers **802** and **804** pinches (or bunches) up the skin in front of a carrier body **806** holding an insertion set, or the like. Once the skin is pinched (or bunched up), the user depresses an activation button and the insertion set, or the like, is inserted into the skin. In

alternative embodiments, the user presses the pinchers **802** and **804** closer together to activate the insertion device **800**. After insertion, the user releases the pinchers **802** and **804** and removes the insertion device **800** from the insertion set, or the like. The effect of this embodiment is to raise the skin so that the actual insertion angle of the piercing member relative to the side of the raised (or pinched) area of skin ranges from 10 degrees to 90 degrees so that the piercing member is inserted in manner similar to the embodiments described above. However, when the pinched skin is released, the piercing member is left in the skin at a shallow angle between 0 and 10 degrees. The amount of pinching and the height of the pinch must be carefully controlled to assure that the insertion set, or the like, is inserted at the proper depth and location in the skin tissue. One example of an insertion set that can be inserted at an angle as disclosed in U.S. patent application Ser. No. 09/034,626 to Funderburk et al. entitled "Medication Infusion Set", which is herein incorporated by reference.

While the description above refers to particular embodiments of the present invention, it will be understood that many modifications may be made without departing from the spirit thereof. The accompanying claims are intended to cover such modifications as would fall within the true scope and spirit of the present invention.

The presently disclosed embodiments are therefore to be considered in all respects as illustrative and not restrictive, the scope of the invention being indicated by the appended claims, rather than the foregoing description, and all changes which come within the meaning and range of equivalency of the claims are therefore intended to be embraced therein.

What is claimed is:

1. An insertion device for inserting at least a portion of at least one piercing member of an insertion set through the skin of a patient, the insertion device comprising:

a device housing;

a carrier body adapted to be moveably secured within the device housing for movement between an advanced position and a retracted position, the carrier body including a receiving structure to support the insertion set in a position with the at least one piercing member oriented for insertion through the skin of the patient at a predetermined angle relative to the skin of the patient upon movement of the carrier body from the retracted position to the advanced position, and wherein the at least one piercing member is secured to the carrier body; and

a driver operatively coupled between the device housing and the carrier body that urges the carrier body with a controlled force and speed from the retracted position toward the advanced position to place at least a portion of the at least one piercing member of the insertion set through the skin of the patient to install the insertion set to the patient,

wherein the receiving structure of the carrier body is removable from the insertion set while maintaining the installation of the insertion set to the patient, and wherein the carrier body retains the secured at least one piercing member during removal of the receiving structure of the insertion device from the insertion set such that the secured at least one piercing member is removed from the insertion set while maintaining the installation of the insertion set to the patient.

2. An insertion device according to claim **1**, wherein the insertion set is prepackaged in the carrier body for insertion of the insertion set to the patient.

3. An insertion device according to claim **2**, wherein the prepackaged insertion set and carrier body are loaded into the device housing of the insertion device prior to insertion of the insertion set to the patient.

4. An insertion device according to claim **1**, wherein the secured at least one piercing member is removed from the carrier body after being removed from the insertion set.

5. An insertion device according to claim **1**, wherein the insertion set further includes a cannula supported by the at least one piercing member of the insertion set to insert the cannula through the skin of the patient, and wherein the secured at least one piercing member is removed from the cannula during removal of the receiving structure of the carrier body is removed from the insertion set while maintaining the installation of the insertion set including the cannula to the patient.

6. An insertion device according to claim **5**, wherein the secured at least one piercing member is removed from the carrier body after being removed from the insertion set.

7. An insertion device according to claim **1**, wherein the driver utilizes a spring to urge the carrier body from the retracted position to the advanced position.

8. An insertion device according to claim **1**, wherein the insertion device is structured to insert at the least one piercing member of the insertion set through the skin of the patient at a predetermined angle of about 90 degrees relative to the skin.

9. An insertion device according to claim **1**, wherein the insertion device is structured to insert the at least one piercing member of the insertion set through the skin of the patient at a predetermined angle of between 90 degrees and 10 degrees relative to the skin.

10. An insertion device according to claim **1**, wherein the insertion device is structured to insert the at least one piercing member of the insertion set at a predetermined angle relative to the skin of the patient such that after insertion, the angle between the at least one piercing member and the skin is greater than 0 degrees and less than or equal to 10 degrees.

11. An insertion device according to claim **1**, wherein the insertion set is a transcutaneous insertion set.

12. An insertion device according to claim **1**, wherein the insertion set is a subcutaneous insertion set.

13. An insertion device according to claim **1**, wherein the insertion set rests mainly on the surface of the skin after insertion.

14. An insertion device according to claim **1**, wherein the insertion set is fully implanted in the skin of the patient after insertion.

15. An insertion device according to claim **1**, wherein the at least one piercing member is a needle.

16. An insertion device according to claim **1**, wherein the at least one piercing member is a plurality of needles.

17. An insertion device according to claim **16**, wherein the plurality of needles are micro-needles.

18. An insertion device according to claim **1**, wherein the insertion set is an infusion set.

19. An insertion device according to claim **1**, wherein the insertion set is a sensor set.

20. An insertion device according to claim **1**, wherein the device housing has a forward end defining a generally planar angled insertion contact surface for placement against the patient's skin with the device housing in a predetermined orientation relative to a patient's skin that mirrors the predetermined angle of the insertion set relative to the patient's skin.

21. An insertion device according to claim **1**, further including a trigger mechanism that actuates the driver.

22. An insertion device according to claim **21**, wherein the trigger mechanism includes at least one trigger for fingertip depression to actuate the driver for movement of the carrier body from the retracted position to the advanced position.

23. An insertion device according to claim **1**, wherein the driver includes at least one spring for spring-loaded movement of the carrier body from the retracted position to the advanced position.

24. An insertion device according to claim **1**, wherein the driver includes a force changing mechanism that permits alteration of the controlled force and speed of the carrier body moving from the retracted position to the advanced position from one insertion cycle to another insertion cycle.

25. An insertion device according to claim **1**, wherein the device housing and the carrier body include a cooperatively engageable track mechanism for guiding movement of the carrier body between the advanced and retracted positions while retaining the carrier body against rotation relative to the device housing.

26. An insertion device according to claim **1**, wherein the at least one piercing member is provided with a piercing member hub as part of the insertion set, and further wherein the receiving structure of the carrier body includes a recess formed therein for mated slide-fit reception of the piercing member hub of the insertion set.

27. An insertion device according to claim **26**, wherein the recess of the receiving structure includes a laterally open undercut recess.

28. An insertion device according to claim **26**, wherein the receiving structure further includes a safety retainer structure that retains the at least one piercing member on the receiving structure, the safety retainer structure separating the at least one piercing member from insertion set during removal of the receiving structure from the insertion set while maintaining the installation of the insertion set to the patient.

29. An insertion device according to claim **1**, wherein the insertion set is both an infusion set and a sensor set combined into an integral unit.

30. An insertion device according to claim **1**, wherein the insertion set is inserted to avoid contacting bone.

31. A method of inserting at least a portion of at least one piercing member of an insertion set through the skin of a patient, the method comprising the steps of:

securing the insertion set to the insertion device in a position with the at least one piercing member oriented for insertion through the skin of the patient at a predetermined angle relative to the skin of the patient upon movement of the carrier body from the retracted position to the advanced position, wherein the at least one piercing member of the carrier body is secured to the insertion device;

urging the insertion set forward with a controlled force and speed from a retracted position toward an advanced position to place at least a portion of the at least one piercing member of the insertion set thorough the skin of the patient to install the insertion set to the patient;

removing the insertion device from the insertion set while maintaining the installation of the insertion set to the patient; and

retaining the secured at least one piercing member with the insertion device during removal from the insertion set such that the secured at least one piercing member is removed from the insertion set while maintaining the installation of the insertion set to the patient.

32. A method according to claim **31**, wherein the insertion set is prepackaged in a carrier body of the insertion device for insertion of the insertion set to the patient.

33. A method according to claim **32**, further including the step of loading the prepackaged insertion set and carrier body into the insertion device prior to insertion of the insertion set to the patient.

34. A method according to claim **31**, further including the step of removing the secured at least one piercing member from the carrier body after being removed from the insertion set.

35. A method according to claim **31**, wherein the insertion set further includes a cannula supported by the at least one piercing member of the insertion set to insert the cannula through the skin of the patient, and wherein the secured at least one piercing member is removed from the cannula during removal of the insertion device from the insertion set while maintaining the installation of the insertion set to the patient.

36. A method according to claim **31**, further including the step of using a spring to urge the insertion set from the retracted position to the advanced position.

37. A method according to claim **31**, wherein the at least one piercing member of the insertion set is placed through the skin of the patient at a predetermined angle of about 90 degrees relative to the skin.

38. A method according to claim **31**, wherein the at least one piercing member of the insertion set is placed through the skin of the patient at a predetermined angle of between 90 degrees and 10 degrees relative to the skin.

39. A method according to claim **31**, wherein the at least one piercing member of the insertion set is placed at a predetermined angle relative to the skin of the patient such that after insertion, the angle between the at least one piercing member and the skin is greater than 0 degrees and less than or equal to 10 degrees.

40. A method according to claim **31**, wherein the insertion set is inserted subcutaneously.

41. A method according to claim **31**, wherein the insertion set is inserted so that it rests mainly on the surface of the skin after insertion.

42. A method according to claim **31**, wherein the insertion set is fully implanted in the skin of the patient after insertion.

43. A method according to claim **31**, wherein the at least one piercing member is a needle.

44. A method according to claim **31**, wherein the at least one piercing member is a plurality of needles.

45. A method according to claim **44**, wherein the plurality of needles are micro-needles.

46. A method according to claim **31**, wherein the insertion set is an infusion set.

47. A method according to claim **31**, wherein the insertion set is a sensor set.

48. A method according to claim **31**, wherein the insertion device has a forward end defining a generally planar angled insertion contact surface for placement against the patient's skin with the insertion device in a predetermined orientation relative to the patient's skin that mirrors the predetermined angle of the insertion set relative to the patient's skin.

49. A method according to claim **31**, wherein the insertion device includes a trigger mechanism, and the method further includes the step of activating the trigger mechanism to actuate the insertion device.

50. A method according to claim **49**, wherein the trigger mechanism is activated with fingertip depression to actuate the driver for movement of the carrier body from the retracted position to the advanced position.

51. A method according to claim **31**, further including the step of using a spring for spring-loaded movement of the insertion set from the retracted position to the advanced position.

52. A method according to claim **31**, further including the step of using a force changing mechanism on the insertion device to alter the controlled force and speed of the insertion set moving from the retracted position to the advanced position from one insertion cycle to another insertion cycle.

53. A method according to claim **31**, further including the step of using a cooperatively engageable track mechanism on the insertion device for guiding movement of the insertion set between the advanced and retracted positions while retaining the insertion set against rotation relative to the insertion device.

54. A method according to claim **31**, wherein the at least one piercing member is provided with a piercing member hub as part of the insertion set, and further wherein insertion device is formed with a recess therein for mated slide-fit reception of the piercing member hub of the insertion set.

55. A method according to claim **54**, wherein the recess is a laterally open undercut recess.

56. A method according to claim **54**, wherein the insertion device includes a safety retainer structure that retains the at least one piercing member on the insertion device during movement from the retracted position to the advanced position, the safety retainer structure separating the at least one piercing member from the insertion set during removal of the insertion device from the insertion set while maintaining the installation of the insertion set to the patient.

57. A method according to claim **31**, wherein the insertion set is both an infusion set and a sensor set combined into an integral unit.

58. A method according to claim **51**, wherein the insertion set is inserted to avoid contacting bone.

* * * * *