US009566384B2

(12) **United States Patent**
Gyrn et al.

(10) **Patent No.: US 9,566,384 B2**
(45) **Date of Patent: Feb. 14, 2017**

(54) **INSERTION DEVICE WITH HORIZONTALLY MOVING PART**

(75) Inventors: **Steffen Gyrn**, Ringsted (DK); **Richard Morgan Hickmott**, København Ø (DK); **Alistair David Morton**, Kastrup (DK); **Henrik Jeppesen**, Holte (DK)

(73) Assignee: **UNOMEDICAL A/S**, Birkeroed (DK)

(*) Notice: Subject to any disclaimer, the term of this patent is extended or adjusted under 35 U.S.C. 154(b) by 1517 days.

(21) Appl. No.: **12/918,034**

(22) PCT Filed: **Feb. 19, 2009**

(86) PCT No.: **PCT/EP2009/051974**

§ 371 (c)(1),
(2), (4) Date: **Oct. 27, 2010**

(87) PCT Pub. No.: **WO2009/103759**

PCT Pub. Date: **Aug. 27, 2009**

(65) **Prior Publication Data**

US 2011/0040254 A1 Feb. 17, 2011

Related U.S. Application Data

(60) Provisional application No. 61/030,022, filed on Feb. 20, 2008, provisional application No. 61/095,379, filed on Sep. 9, 2008.

(30) **Foreign Application Priority Data**

Feb. 21, 2008 (DK) 2008 00240

(51) **Int. Cl.**
A61M 5/178 (2006.01)
A61M 5/32 (2006.01)
(Continued)

(52) **U.S. Cl.**
CPC ***A61M 5/158*** (2013.01); ***A61M 5/14248*** (2013.01); *A61M 5/1413* (2013.01);
(Continued)

(58) **Field of Classification Search**
CPC A61M 5/158; A61M 5/14248; A61M 5/1412; A61M 2005/14252; A61M 2005/1585
(Continued)

(56) **References Cited**

U.S. PATENT DOCUMENTS

1,592,462 A 7/1926 MacGregor
2,047,010 A 7/1936 Dickinson
(Continued)

FOREIGN PATENT DOCUMENTS

DE 4 342 329 A1 6/1994
DE 196 31 921 A1 3/1997
(Continued)

OTHER PUBLICATIONS

International Search Report completed Jun. 17, 2009 for International Application No. PCT/EP2009/051974.
(Continued)

Primary Examiner — Matthew F Desanto
(74) *Attorney, Agent, or Firm* — Wilson Sonsini Goodrich & Rosati

(57) **ABSTRACT**

The invention relates to an insertion device comprising—a penetrating member (**50**) connected to transformation means (**52**), —a moving part (**38**) comprising guiding means (**39**) which guiding means (**39**) restrict the movement of the transformation means (**52**) and guide the penetrating member (**50**) from a first to a second position in a first direction, i.e. the direction of insertion, towards the injection site, and—a stationary housing (**30**) comprising guiding means (**32**) which guiding means (**32**) restrict the movement of the
(Continued)

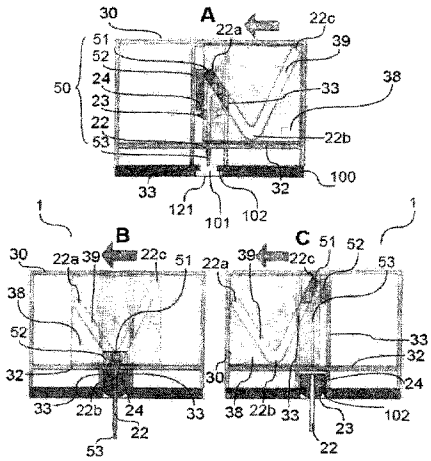

DEXCOM
EXHIBIT 1143

moving part (**38**). The guiding means (**32**) guide the moving part (**38**) in a second direction which is linear and different from the first direction i.e. the direction of insertion.

18 Claims, 19 Drawing Sheets

(51) **Int. Cl.**
A61M 5/158 (2006.01)
A61M 5/142 (2006.01)
A61M 5/14 (2006.01)
A61M 39/26 (2006.01)

(52) **U.S. Cl.**
CPC *A61M 2005/1426* (2013.01); *A61M 2005/14252* (2013.01); *A61M 2005/1585* (2013.01); *A61M 2005/1587* (2013.01); *A61M 2039/267* (2013.01)

(58) **Field of Classification Search**
USPC 604/131–155, 175–179, 890.1
See application file for complete search history.

(56) **References Cited**

U.S. PATENT DOCUMENTS

2,295,849 A 9/1942 Kayden
2,690,529 A 9/1954 Lindblad
2,972,779 A 2/1961 Cowley
3,059,802 A 10/1962 Mitchell
3,074,541 A 1/1963 Roehr
3,149,186 A 9/1964 Coanda
3,221,739 A 12/1965 Rosenthal
3,221,740 A 12/1965 Rosenthal
3,306,291 A 2/1967 Burke
3,485,352 A 12/1969 Pilger
3,509,879 A 5/1970 Bathish et al.
3,519,158 A 7/1970 Anderson
3,547,119 A 12/1970 Hall et al.
3,575,337 A 4/1971 Bernhardt
3,610,240 A 10/1971 Harautuneian
3,615,039 A 10/1971 Ward
3,670,727 A 6/1972 Reiterman
3,783,895 A 1/1974 Weichselbaum
3,788,374 A 1/1974 Saijo
3,810,469 A 5/1974 Hurschman
3,835,862 A 9/1974 Villari
3,840,011 A 10/1974 Wright
3,893,448 A 7/1975 Brantigan
3,937,219 A 2/1976 Karakashian
3,986,507 A 10/1976 Watt
3,986,508 A 10/1976 Barrington
3,995,518 A 12/1976 Spiroff
4,022,205 A 5/1977 Tenczar
4,188,950 A 2/1980 Wardlaw
4,201,406 A 5/1980 Dennehey et al.
4,227,528 A 10/1980 Wardlaw
4,259,276 A 3/1981 Rawlings
4,267,836 A 5/1981 Whitney et al.
4,296,786 A 10/1981 Brignola
4,315,505 A 2/1982 Crandall et al.
4,333,455 A 6/1982 Bodicky
4,334,551 A 6/1982 Pfister
D267,199 S 12/1982 Koenig
4,378,015 A 3/1983 Wardlaw
4,402,407 A 9/1983 Maly
4,415,393 A 11/1983 Grimes
4,417,886 A 11/1983 Frankhouser et al.
4,464,178 A 8/1984 Dalton
4,473,369 A 9/1984 Lueders et al.
4,484,910 A 11/1984 Sarnoff et al.
4,500,312 A 2/1985 McFarlane
4,508,367 A 4/1985 Oreopoulos et al.
4,525,157 A 6/1985 Vaillancourt
4,530,695 A 7/1985 Phillips et al.
4,531,937 A 7/1985 Yates
4,543,088 A 9/1985 Bootman et al.
4,563,177 A 1/1986 Kamen
4,610,469 A 9/1986 Wolff-Mooij
4,617,019 A 10/1986 Fecht
4,713,059 A 12/1987 Bickelhaupt et al.
4,734,092 A 3/1988 Millerd
4,755,173 A 7/1988 Konopka et al.
4,817,603 A 4/1989 Turner et al.
RE32,922 E 5/1989 Levin et al.
4,838,871 A 6/1989 Luther
4,840,613 A 6/1989 Balbierz
4,850,974 A 7/1989 Bickelhaupt et al.
4,850,996 A 7/1989 Cree
4,863,016 A 9/1989 Fong et al.
4,878,897 A 11/1989 Katzin
4,890,608 A 1/1990 Steer
4,894,054 A 1/1990 Miskinyar
4,895,570 A 1/1990 Larkin
4,917,669 A 4/1990 Bonaldo
4,935,010 A 6/1990 Cox et al.
4,950,163 A 8/1990 Zimble
4,950,252 A 8/1990 Luther et al.
4,956,989 A 9/1990 Nakajima
4,970,954 A 11/1990 Weir et al.
4,978,338 A 12/1990 Melsky et al.
4,982,842 A 1/1991 Hollister
4,986,817 A 1/1991 Code
4,994,042 A 2/1991 Vadher
4,994,045 A 2/1991 Ranford
5,011,475 A 4/1991 Olsen
5,020,665 A 6/1991 Bruno
5,024,662 A 6/1991 Menes et al.
5,067,496 A 11/1991 Eisele
5,092,853 A 3/1992 Couvertier, II
5,098,389 A 3/1992 Cappucci
5,112,313 A 5/1992 Sallee
5,116,319 A 5/1992 Van den Haak
5,116,325 A 5/1992 Paterson
5,121,751 A 6/1992 Panalletta
5,129,884 A 7/1992 Dysarz
5,135,502 A 8/1992 Koenig, Jr. et al.
5,137,516 A 8/1992 Rand et al.
5,137,524 A 8/1992 Lynn et al.
5,141,496 A 8/1992 Dalto et al.
5,147,375 A 9/1992 Sullivan et al.
5,163,915 A 11/1992 Holleron
5,172,808 A 12/1992 Bruno
5,176,643 A 1/1993 Kramer et al.
5,176,650 A 1/1993 Haining
5,176,662 A 1/1993 Bartholomew et al.
5,186,712 A 2/1993 Kelso et al.
5,188,611 A 2/1993 Orgain
RE34,223 E 4/1993 Bonaldo
5,205,820 A 4/1993 Kriesel
5,222,947 A 6/1993 D'Amico
5,232,454 A 8/1993 Hollister
5,248,301 A 9/1993 Koenig et al.
5,256,149 A 10/1993 Banik et al.
5,256,152 A 10/1993 Marks
5,257,980 A 11/1993 Van Antwerp et al.
5,267,963 A * 12/1993 Bachynsky 604/134
5,269,799 A 12/1993 Daniel
5,271,744 A 12/1993 Kramer et al.
5,279,579 A 1/1994 D'Amico
5,279,591 A 1/1994 Simon
5,282,793 A 2/1994 Larson
5,300,030 A 4/1994 Crossman et al.
5,312,359 A 5/1994 Wallace
5,312,369 A 5/1994 Arcusin et al.
5,316,246 A 5/1994 Scott et al.
5,324,302 A 6/1994 Crouse
5,342,319 A 8/1994 Watson et al.
5,342,324 A 8/1994 Tucker
5,344,007 A 9/1994 Nakamura et al.
5,350,392 A 9/1994 Purcell et al.
5,354,280 A 10/1994 Haber et al.
5,354,337 A 10/1994 Hoy

(56) **References Cited**

U.S. PATENT DOCUMENTS

5,366,469	A	11/1994	Steg et al.
5,372,592	A	12/1994	Gambale
5,372,787	A	12/1994	Ritter
5,376,082	A	12/1994	Phelps
5,379,895	A	1/1995	Foslien
5,384,174	A	1/1995	Ward et al.
5,387,197	A	2/1995	Smith et al.
5,390,669	A	2/1995	Stuart et al.
5,391,151	A	2/1995	Wilmot
5,403,288	A	4/1995	Stanners
5,405,332	A	4/1995	Opalek
5,425,715	A	6/1995	Dalling et al.
5,429,607	A	7/1995	McPhee
5,429,613	A	7/1995	D'Amico
5,439,473	A	8/1995	Jorgensen
D362,718	S	9/1995	Deily et al.
5,449,349	A	9/1995	Sallee et al.
5,451,210	A	9/1995	Kramer et al.
5,478,316	A	12/1995	Bitdinger et al.
5,490,841	A	2/1996	Landis
5,501,675	A	3/1996	Erskine
5,505,709	A	4/1996	Funderburk et al.
5,507,730	A	4/1996	Haber et al.
5,514,117	A	5/1996	Lynn
5,520,654	A	5/1996	Wahlberg
5,522,803	A	6/1996	Teisson-Simony
5,527,287	A	6/1996	Miskinyar et al.
5,533,974	A	7/1996	Gaba
5,540,709	A	7/1996	Ramel
5,545,143	A	8/1996	Fischell
5,545,152	A	8/1996	Funderburk et al.
5,549,577	A	8/1996	Siegel et al.
5,554,130	A	9/1996	McDonald et al.
5,558,650	A	9/1996	McPhee
5,562,629	A	10/1996	Haughton et al.
5,562,636	A	10/1996	Utterberg
5,573,510	A	11/1996	Isaacson
5,575,777	A	11/1996	Cover et al.
5,584,813	A	12/1996	Livingston et al.
5,586,553	A	12/1996	Halili
5,591,188	A	1/1997	Waisman
5,599,309	A	2/1997	Marshall et al.
5,599,315	A	2/1997	McPhee
5,599,318	A	2/1997	Sweeney et al.
5,628,765	A	5/1997	Morita
5,643,214	A	7/1997	Marshall
5,643,216	A	7/1997	White
5,643,220	A	7/1997	Cosme
5,658,256	A	8/1997	Shields
5,662,617	A	9/1997	Odell et al.
5,665,071	A	9/1997	Wyrick
5,665,075	A	9/1997	Gyure et al.
5,676,156	A	10/1997	Yoon
5,681,323	A	10/1997	Arick
5,695,476	A	12/1997	Harris
5,697,907	A	12/1997	Gaba
5,700,250	A	12/1997	Erskine
5,702,371	A	12/1997	Bierman
5,704,920	A	1/1998	Gyure
5,709,662	A	1/1998	Olive et al.
5,714,225	A	2/1998	Hansen et al.
5,738,641	A	4/1998	Watson et al.
5,741,288	A	4/1998	Rife
5,752,923	A	5/1998	Terwilliger
5,807,316	A	9/1998	Teeple
5,807,348	A	9/1998	Zinger et al.
5,810,835	A	9/1998	Ryan et al.
5,817,058	A	10/1998	Shaw
5,820,598	A	10/1998	Gazza et al.
5,827,236	A	10/1998	Takahashi
5,833,666	A	11/1998	Davis et al.
5,843,001	A	12/1998	Goldenberg
5,848,990	A	12/1998	Cirelli et al.
5,851,197	A	12/1998	Marano et al.
5,858,001	A	1/1999	Tsals et al.
5,865,806	A	2/1999	Howell
5,899,886	A	5/1999	Cosme
5,911,705	A	6/1999	Howell
5,913,846	A	6/1999	Szabo
5,916,199	A	6/1999	Miles
5,919,167	A	7/1999	Mulhauser et al.
5,919,170	A	7/1999	Woessner
5,925,032	A	7/1999	Clements
5,935,109	A	8/1999	Donnan
5,947,931	A	9/1999	Bierman
5,947,935	A	9/1999	Rhinehart et al.
5,951,523	A	9/1999	Osterlind et al.
5,954,643	A	9/1999	VanAntwerp et al.
5,957,892	A	9/1999	Thorne
5,957,897	A	9/1999	Jeffrey
5,968,011	A	10/1999	Larsen et al.
5,971,966	A	10/1999	Lav
5,975,120	A	11/1999	Novosel
5,980,488	A	11/1999	Thorne
5,980,506	A	11/1999	Mathiasen
5,984,224	A	11/1999	Yang
5,984,897	A	11/1999	Peterson et al.
D417,733	S	12/1999	Howell et al.
6,017,328	A	1/2000	Fischell et al.
6,017,598	A	1/2000	Kreischer et al.
D421,119	S	2/2000	Musgrave et al.
6,024,727	A	2/2000	Thorne et al.
6,039,629	A	3/2000	Mitchell
6,042,570	A	3/2000	Bell et al.
6,045,533	A	4/2000	Kriesel et al.
6,045,534	A	4/2000	Jacobsen et al.
6,050,976	A	4/2000	Thorne et al.
6,053,893	A	4/2000	Bucher
6,053,930	A	4/2000	Ruppert
6,056,718	A	5/2000	Funderburk et al.
6,056,726	A	5/2000	Isaacson
6,074,369	A	6/2000	Sage et al.
6,074,371	A	6/2000	Fischell
6,077,244	A	6/2000	Botich et al.
6,079,432	A	6/2000	Paradis
6,086,008	A	7/2000	Gray et al.
6,086,575	A	7/2000	Mejslov
6,090,068	A	7/2000	Chanut
6,093,172	A	7/2000	Funderburk et al.
6,093,179	A	7/2000	O'Hara et al.
6,099,503	A	8/2000	Stardella
6,105,218	A	8/2000	Reekie
6,106,498	A	8/2000	Friedli et al.
6,120,482	A	9/2000	Szabo
6,123,690	A	9/2000	Mejslov
6,132,755	A	10/2000	Eicher et al.
6,139,534	A	10/2000	Niedospial, Jr.
6,159,181	A	12/2000	Crossman et al.
6,183,464	B1	2/2001	Sharp et al.
6,191,338	B1	2/2001	Haller
6,193,694	B1	2/2001	Bell et al.
6,210,420	B1	4/2001	Mauze et al.
6,219,574	B1	4/2001	Cormier et al.
6,221,058	B1	4/2001	Kao et al.
6,248,093	B1	6/2001	Moberg
6,261,272	B1	7/2001	Gross et al.
6,293,925	B1	9/2001	Safabash et al.
6,302,866	B1	10/2001	Marggi
6,319,232	B1	11/2001	Kashmer
6,322,535	B1	11/2001	Hitchins et al.
6,322,808	B1	11/2001	Trautman et al.
6,334,856	B1	1/2002	Allen et al.
6,355,021	B1	3/2002	Nielsen et al.
6,364,113	B1	4/2002	Faasse et al.
6,378,218	B2	4/2002	Sigwart et al.
6,379,335	B1	4/2002	Rigon et al.
6,387,076	B1	5/2002	Van Lunduyt
6,387,078	B1	5/2002	Gillespie, III
6,405,876	B1	6/2002	Seshimoto et al.
6,440,096	B1	8/2002	Lastovich et al.
6,447,482	B1	9/2002	Rønborg et al.
6,450,992	B1	9/2002	Cassidy, Jr.
6,485,461	B1	11/2002	Mason et al.
6,488,663	B1	12/2002	Steg

(56) **References Cited**

U.S. PATENT DOCUMENTS

6,503,222	B2	1/2003	Lo
6,517,517	B1	2/2003	Farrugia et al.
6,520,938	B1	2/2003	Funderburk et al.
D472,316	S	3/2003	Douglas et al.
D472,630	S	4/2003	Douglas et al.
6,572,586	B1	6/2003	Wojcik
6,579,267	B2	6/2003	Lynch et al.
6,582,397	B2	6/2003	Alesi et al.
6,595,962	B1	7/2003	Perthu
6,607,509	B2	8/2003	Bobroff et al.
6,607,511	B2	8/2003	Halseth et al.
6,613,064	B2	9/2003	Rutynowski et al.
6,620,133	B1	9/2003	Steck
6,620,136	B1	9/2003	Pressly, Sr. et al.
6,620,140	B1	9/2003	Metzger
6,629,949	B1	10/2003	Douglas
6,645,181	B1	11/2003	Lavi et al.
6,645,182	B1	11/2003	Szabo
6,659,982	B2	12/2003	Douglas et al.
6,685,674	B2	2/2004	Douglas et al.
6,699,218	B2	3/2004	Flaherty et al.
6,702,779	B2	3/2004	Connelly et al.
6,726,649	B2	4/2004	Swenson et al.
6,736,797	B1	5/2004	Larsen et al.
6,743,203	B1	6/2004	Pickhard
6,749,587	B2	6/2004	Flaherty
6,749,589	B1	6/2004	Douglas et al.
6,755,805	B1	6/2004	Reid
6,776,775	B1	8/2004	Mohammad
6,790,199	B1	9/2004	Gianakos
6,805,686	B1	10/2004	Fathallah et al.
6,808,506	B2	10/2004	Lastovich et al.
6,811,545	B2	11/2004	Vaillancourt
6,814,720	B2	11/2004	Olsen et al.
6,824,530	B2	11/2004	Wagner et al.
6,824,531	B1	11/2004	Zecha, Jr. et al.
6,830,562	B2	12/2004	Mogensen et al.
6,837,877	B2	1/2005	Zurcher
6,837,878	B2	1/2005	Smutney et al.
6,840,922	B2	1/2005	Nielsen et al.
6,880,701	B2	4/2005	Bergeron et al.
6,923,791	B2	8/2005	Douglas
6,926,694	B2	8/2005	Marano-Ford et al.
6,939,324	B2	9/2005	Gonnelli et al.
6,939,331	B2	9/2005	Ohshima
6,949,084	B2	9/2005	Marggi et al.
6,959,812	B2	11/2005	Reif et al.
6,960,193	B2	11/2005	Rosenberg
6,979,316	B1	12/2005	Rubin et al.
6,991,619	B2	1/2006	Marano-Ford et al.
6,991,620	B2	1/2006	Marano-Ford et al.
6,994,213	B2	2/2006	Giard et al.
6,997,907	B2	2/2006	Safabash et al.
7,014,625	B2	3/2006	Bengtsson
7,018,344	B2	3/2006	Bressler et al.
7,022,108	B2	4/2006	Marano-Ford et al.
7,047,070	B2	5/2006	Wilkenson et al.
7,052,483	B2	5/2006	Wojcik
7,055,713	B2	6/2006	Rea et al.
7,056,302	B2	6/2006	Douglas
7,070,580	B2	7/2006	Nielsen
7,074,208	B2	7/2006	Pajunk et al.
D526,409	S	8/2006	Nielsen et al.
7,083,592	B2	8/2006	Lastovich et al.
7,083,597	B2	8/2006	Lynch et al.
7,097,631	B2	8/2006	Trautman et al.
7,109,878	B2	9/2006	Mann et al.
7,115,108	B2	10/2006	Wilkenson et al.
7,115,112	B2	10/2006	Mogensen et al.
7,141,023	B2	11/2006	Diermann et al.
7,147,623	B2	12/2006	Mathiasen
7,186,236	B2	3/2007	Gibson et al.
7,211,068	B2	5/2007	Douglas
7,214,207	B2	5/2007	Lynch et al.
7,214,215	B2	5/2007	Heinzerling et al.
7,250,037	B2	7/2007	Shermer et al.
7,258,680	B2	8/2007	Mogensen et al.
D554,253	S	10/2007	Kornerup
7,303,543	B1	12/2007	Maule et al.
7,309,326	B2	12/2007	Fangrow, Jr.
7,322,473	B2	1/2008	Fux
7,407,491	B2	8/2008	Fangrow, Jr.
7,407,493	B2	8/2008	Cane'
7,431,876	B2	10/2008	Mejlhede et al.
7,441,655	B1	10/2008	Hoftman
7,569,262	B2	8/2009	Szabo et al.
7,648,494	B2	1/2010	Kornerup et al.
7,766,867	B2	8/2010	Lynch et al.
7,846,132	B2	12/2010	Gravesen et al.
7,850,652	B2	12/2010	Liniger et al.
8,012,126	B2	9/2011	Tipsmark et al.
8,087,333	B2	1/2012	Oishi
8,123,724	B2	2/2012	Gillespie, III
8,303,549	B2	11/2012	Mejlhede et al.
8,323,250	B2 *	12/2012	Chong et al. 604/180
2001/0004970	A1	6/2001	Hollister et al.
2001/0016714	A1	8/2001	Bell et al.
2001/0021827	A1	9/2001	Ferguson et al.
2001/0039387	A1	11/2001	Rutynowski et al.
2001/0039401	A1	11/2001	Ferguson et al.
2001/0041875	A1	11/2001	Higuchi et al.
2001/0049496	A1	12/2001	Kirchhofer
2001/0053889	A1	12/2001	Marggi
2001/0056284	A1	12/2001	Purcell et al.
2002/0022798	A1	2/2002	Connelly
2002/0022855	A1	2/2002	Bobroff et al.
2002/0026152	A1	2/2002	Bierman
2002/0055711	A1	5/2002	Lavi et al.
2002/0068904	A1	6/2002	Bierman et al.
2002/0072720	A1	6/2002	Hague et al.
2002/0074345	A1	6/2002	Schneider et al.
2002/0077599	A1	6/2002	Wojcik
2002/0082543	A1	6/2002	Park et al.
2002/0095138	A1	7/2002	Lynch et al.
2002/0107489	A1	8/2002	Lee
2002/0111581	A1	8/2002	Sasso
2002/0156424	A1	10/2002	Suzuki et al.
2002/0156427	A1	10/2002	Suzuki et al.
2002/0161322	A1	10/2002	Utterberg et al.
2002/0161332	A1	10/2002	Ramey
2002/0161386	A1	10/2002	Halseth et al.
2002/0165493	A1	11/2002	Bierman
2002/0169419	A1	11/2002	Steg
2002/0173748	A1	11/2002	McConnell et al.
2002/0173769	A1	11/2002	Gray et al.
2002/0183688	A1	12/2002	Lastovich et al.
2002/0189688	A1	12/2002	Roorda
2002/0193737	A1	12/2002	Popovsky
2002/0193744	A1	12/2002	Alesi et al.
2003/0014018	A1	1/2003	Giambattista et al.
2003/0060781	A1	3/2003	Mogensen et al.
2003/0069548	A1	4/2003	Connelly et al.
2003/0088238	A1	5/2003	Poulsen et al.
2003/0105430	A1	6/2003	Lavi et al.
2003/0109829	A1	6/2003	Mogensen et al.
2003/0125669	A1	7/2003	Safabash et al.
2003/0125678	A1	7/2003	Swenson et al.
2003/0130619	A1	7/2003	Safabash et al.
2003/0139704	A1	7/2003	Lin
2003/0158520	A1	8/2003	Safabash et al.
2003/0176843	A1	9/2003	Wilkinson
2003/0176852	A1	9/2003	Lynch et al.
2003/0181863	A1	9/2003	Ackley et al.
2003/0181868	A1	9/2003	Swenson
2003/0181873	A1	9/2003	Swenson
2003/0181874	A1	9/2003	Bressler et al.
2003/0187394	A1	10/2003	Wilkinson et al.
2003/0187395	A1	10/2003	Gabel
2003/0199823	A1	10/2003	Bobroff et al.
2003/0216686	A1	11/2003	Lynch et al.
2003/0220610	A1	11/2003	Lastovich et al.
2003/0225373	A1	12/2003	Bobroff et al.
2003/0225374	A1	12/2003	Mathiasen
2003/0229308	A1	12/2003	Tsals et al.

(56) **References Cited**

U.S. PATENT DOCUMENTS

2003/0229316	A1	12/2003	Hwang et al.
2004/0002682	A1	1/2004	Kovelman et al.
2004/0006316	A1	1/2004	Patton
2004/0044306	A1	3/2004	Lynch et al.
2004/0049159	A1	3/2004	Barrus et al.
2004/0059316	A1	3/2004	Smedegaard
2004/0068231	A1	4/2004	Blondeau
2004/0069044	A1	4/2004	Lavi et al.
2004/0087913	A1	5/2004	Rogers et al.
2004/0092865	A1	5/2004	Flaherty et al.
2004/0092875	A1	5/2004	Kochamba
2004/0111068	A1	6/2004	Swenson
2004/0112781	A1	6/2004	Hofverberg et al.
2004/0116865	A1	6/2004	Bengtsson
2004/0133164	A1	7/2004	Funderburk et al.
2004/0138612	A1	7/2004	Shermer et al.
2004/0138620	A1	7/2004	Douglas et al.
2004/0143216	A1	7/2004	Douglas et al.
2004/0143218	A1	7/2004	Das
2004/0158202	A1	8/2004	Jensen
2004/0158207	A1*	8/2004	Hunn et al. 604/164.01
2004/0162518	A1	8/2004	Connelly et al.
2004/0162521	A1	8/2004	Bengtsson
2004/0171989	A1	9/2004	Horner et al.
2004/0178098	A1	9/2004	Swenson et al.
2004/0186446	A1	9/2004	Ohshima
2004/0193143	A1	9/2004	Sauer
2004/0199123	A1	10/2004	Nielsen
2004/0204673	A1	10/2004	Flaherty et al.
2004/0204687	A1	10/2004	Mogensen et al.
2004/0204690	A1	10/2004	Yashiro et al.
2004/0215151	A1	10/2004	Marshall et al.
2004/0220528	A1	11/2004	Garcia, Jr.
2004/0236284	A1	11/2004	Hoste et al.
2004/0238392	A1	12/2004	Peterson et al.
2004/0243065	A1	12/2004	McConnell et al.
2004/0254433	A1	12/2004	Bandis et al.
2004/0260235	A1	12/2004	Douglas
2004/0260250	A1	12/2004	Harris et al.
2005/0035014	A1	2/2005	Cane
2005/0038378	A1	2/2005	Lastovich et al.
2005/0043687	A1	2/2005	Mogensen et al.
2005/0049571	A1	3/2005	Lastovich et al.
2005/0065466	A1	3/2005	Vedrine
2005/0065472	A1	3/2005	Cindrich et al.
2005/0075606	A1	4/2005	Botich et al.
2005/0080386	A1	4/2005	Reid
2005/0101910	A1	5/2005	Bowman et al.
2005/0101912	A1	5/2005	Faust et al.
2005/0101932	A1	5/2005	Cote et al.
2005/0101933	A1	5/2005	Marrs et al.
2005/0107743	A1	5/2005	Fangrow, Jr.
2005/0113761	A1	5/2005	Faust et al.
2005/0119611	A1	6/2005	Marano-Ford et al.
2005/0119619	A1	6/2005	Haining
2005/0119637	A1	6/2005	Lundgren et al.
2005/0124936	A1	6/2005	Mogensen et al.
2005/0131347	A1	6/2005	Marano-Ford et al.
2005/0159709	A1	7/2005	Wilkinson
2005/0159714	A1	7/2005	Gibson
2005/0165382	A1	7/2005	Fulford
2005/0192560	A1	9/2005	Walls et al.
2005/0203461	A1	9/2005	Flaherty et al.
2005/0215979	A1	9/2005	Kornerup et al.
2005/0240154	A1	10/2005	Mogensen et al.
2005/0251098	A1	11/2005	Wyss et al.
2005/0256456	A1	11/2005	Marano-Ford et al.
2005/0261629	A1	11/2005	Marano-Ford et al.
2005/0277892	A1	12/2005	Chen
2005/0283114	A1	12/2005	Bresina et al.
2006/0015063	A1	1/2006	Butikofer et al.
2006/0015076	A1	1/2006	Heinzerling et al.
2006/0030815	A1	2/2006	Csincsura et al.
2006/0036214	A1	2/2006	Mogensen et al.
2006/0041224	A1	2/2006	Jensen
2006/0069351	A9	3/2006	Safabash et al.
2006/0069382	A1	3/2006	Pedersen
2006/0069383	A1	3/2006	Bogaerts et al.
2006/0095003	A1	5/2006	Marano-Ford et al.
2006/0095014	A1	5/2006	Ethelfeld
2006/0106346	A1	5/2006	Sullivan et al.
2006/0129123	A1	6/2006	Wojcik
2006/0135908	A1	6/2006	Liniger et al.
2006/0135913	A1	6/2006	Ethelfeld
2006/0142698	A1	6/2006	Ethelfeld
2006/0161108	A1	7/2006	Mogensen et al.
2006/0173410	A1	8/2006	Moberg et al.
2006/0173413	A1	8/2006	Fan
2006/0184104	A1	8/2006	Cheney, II et al.
2006/0184140	A1	8/2006	Okiyama
2006/0200073	A1	9/2006	Radmer et al.
2006/0241551	A1	10/2006	Lynch et al.
2006/0247553	A1	11/2006	Diermann et al.
2006/0247574	A1	11/2006	Maule et al.
2006/0253085	A1	11/2006	Geismar et al.
2006/0253086	A1	11/2006	Moberg et al.
2006/0264835	A1	11/2006	Nielsen et al.
2006/0264890	A1	11/2006	Moberg et al.
2007/0005017	A1	1/2007	Alchas et al.
2007/0016129	A1	1/2007	Liniger et al.
2007/0016159	A1	1/2007	Sparholt et al.
2007/0021729	A1	1/2007	Mogensen et al.
2007/0049865	A1	3/2007	Radmer et al.
2007/0049870	A1	3/2007	Gray et al.
2007/0051784	A1	3/2007	Money et al.
2007/0066955	A1	3/2007	Sparholt et al.
2007/0088271	A1	4/2007	Richards et al.
2007/0093754	A1	4/2007	Mogensen
2007/0104596	A1	5/2007	Preuthun et al.
2007/0112301	A1	5/2007	Preuthun et al.
2007/0112303	A1	5/2007	Liniger
2007/0129688	A1	6/2007	Scheurer et al.
2007/0129691	A1	6/2007	Sage, Jr. et al.
2007/0173767	A1	7/2007	Lynch et al.
2007/0179444	A1	8/2007	Causey et al.
2007/0185441	A1	8/2007	Fangrow, Jr.
2007/0191772	A1	8/2007	Wojcik
2007/0191773	A1	8/2007	Wojcik
2007/0203454	A1	8/2007	Shermer et al.
2007/0213673	A1	9/2007	Douglas
2007/0244448	A1	10/2007	Lastovich et al.
2007/0299409	A1	12/2007	Whitbourne et al.
2008/0269687	A1	10/2008	Chong
2008/0312601	A1	12/2008	Cane'
2009/0062767	A1	3/2009	Van Antwerp et al.
2009/0326456	A1	12/2009	Cross et al.
2010/0004597	A1	1/2010	Gyrn et al.
2010/0022956	A1	1/2010	Tipsmark et al.
2010/0137829	A1	6/2010	Nielsen et al.
2010/0228226	A1	9/2010	Nielsen
2010/0262078	A1	10/2010	Blomquist
2011/0054399	A1	3/2011	Chong et al.

FOREIGN PATENT DOCUMENTS

DE	299 05 072	U1	9/1999
DE	101 17 285	A1	11/2002
DE	203 20 207	U1	11/2004
EP	0117632	B1	9/1984
EP	0239244	B1	2/1987
EP	0272530	A2	6/1988
EP	0451040	A1	10/1991
EP	0544837	B1	6/1993
EP	0615768	A2	9/1994
EP	0651662	B1	5/1995
EP	0652027	A1	5/1995
EP	0657184	A1	6/1995
EP	0688232	B1	12/1995
EP	0714631	B1	6/1996
EP	0744183	A2	11/1996
EP	0747006	A1	12/1996
EP	0775501	B1	5/1997
EP	0799626	A1	10/1997
EP	0937475	A2	8/1999

(56) **References Cited**

FOREIGN PATENT DOCUMENTS

EP	0956879	A1	11/1999
EP	2272559	A1	1/2001
EP	1086718	A1	3/2001
EP	1125593	A1	8/2001
EP	1329233	B1	7/2003
EP	1350537	A1	10/2003
EP	1360970	A1	11/2003
EP	1380315	A1	1/2004
EP	1407747	A1	4/2004
EP	1407793	A1	4/2004
EP	1421968	A2	5/2004
EP	1177802	B1	9/2004
EP	1475113	A1	11/2004
EP	1495775	A1	1/2005
EP	1502613	A1	2/2005
EP	1525873	A1	4/2005
EP	1527792	A1	5/2005
EP	1559442	A2	8/2005
EP	1616594	A1	1/2006
EP	1704889	A1	9/2006
EP	1719537	A2	11/2006
EP	1762259	A1	3/2007
EP	1764125	A1	3/2007
EP	1776980	A1	4/2007
EP	1970091	A1	9/2008
FR	2725902	A1	10/1994
FR	2 752 164	A1	2/1998
GB	906574		9/1962
GB	2 088 215	A	6/1982
GB	2 230 702	A	10/1990
GB	2 423 267	A	8/2006
GB	2 450 872	A	7/2007
GB	2 459 101	A	10/2009
JP	10179734	A	8/1991
JP	7051251	A	11/1995
JP	8187286	A	7/1996
JP	A-03-191965	A	7/1998
JP	2002-028246	A	1/2002
RU	2 238 111	C2	12/2003
SU	933 100		6/1982
WO	WO 81/01795	A1	7/1981
WO	WO 82/03558	A1	10/1982
WO	WO 92/04062	A1	3/1992
WO	WO 93/05840	A2	4/1993
WO	WO 93/11709	A1	6/1993
WO	WO 94/20160	A1	9/1994
WO	WO 95/19194	A1	7/1995
WO	WO 96/32981	A1	7/1996
WO	WO 96/20021	A1	10/1996
WO	WO 98/26835	A1	6/1998
WO	WO 98/33549	A1	8/1998
WO	WO 98/58693	A1	12/1998
WO	WO 99/07435	A1	2/1999
WO	WO99/22789	A1	5/1999
WO	WO 99/33504	A1	7/1999
WO	WO 00/02614	A1	1/2000
WO	WO 00/03757	A1	1/2000
WO	WO 00/44324	A1	8/2000
WO	WO 01/12746	A1	2/2001
WO	WO 01/30419	A2	5/2001
WO	WO 01/68180	A1	9/2001
WO	WO 01/72353	A2	10/2001
WO	WO 01/76684	A1	10/2001
WO	WO 01/93926	A2	12/2001
WO	WO 02/02165	A2	1/2002
WO	WO 02/07804	A1	1/2002
WO	WO 02/40083	A2	5/2002
WO	WO 02/053220	A2	7/2002
WO	WO 02/068014	A2	9/2002
WO	WO 02/081012	A2	10/2002
WO	WO 02/081013	A2	10/2002
WO	WO 02/083206	A2	10/2002
WO	WO 02/083228	A2	10/2002
WO	WO 02/094352	A2	11/2002
WO	WO 02/100457	A2	12/2002
WO	WO 02/102442	A1	12/2002
WO	WO 03/015860	A1	2/2003
WO	WO 03/026728	A1	4/2003
WO	WO 03/068305	A1	8/2003
WO	WO 03/075980	A2	9/2003
WO	WO 03/095003	A1	11/2003
WO	WO 2004/012796	A1	2/2004
WO	WO 2004/024219	A1	3/2004
WO	WO 2004/026375	A1	4/2004
WO	WO 2004/029457	A1	4/2004
WO	WO 2004/030726	A1	4/2004
WO	WO 2004/037325	A1	5/2004
WO	WO 2004/054644	A1	7/2004
WO	WO 2004/056412	A2	7/2004
WO	WO 2004/064593	A2	8/2004
WO	WO 2004/071308	A1	8/2004
WO	WO 2004/087240	A1	10/2004
WO	WO 2004/098683	A1	11/2004
WO	WO 2004/101016	A1	11/2004
WO	WO 2004/101071	A2	11/2004
WO	WO 2004/110527	A1	12/2004
WO	WO 2005/002649	A1	1/2005
WO	WO 2005/004973	A1	1/2005
WO	WO 2005/018703	A2	3/2005
WO	WO 2005/037184	A2	4/2005
WO	WO 2005/037350	A2	4/2005
WO	WO 2005/039673	A2	5/2005
WO	WO 2005/046780	A1	5/2005
WO	WO 2005/065748	A1	7/2005
WO	WO 2005/068006	A1	7/2005
WO	WO 2005/072795	A2	8/2005
WO	WO 2005/092410	A1	10/2005
WO	WO 2005/094920	A1	10/2005
WO	WO 2005/112800	A2	12/2005
WO	WO 2005/118055	A1	12/2005
WO	WO 2006/003130	A1	1/2006
WO	WO 2006/015507	A2	2/2006
WO	WO 2006/015600	A2	2/2006
WO	WO 2006/024650	A2	3/2006
WO	WO 2006/032689	A1	3/2006
WO	WO 2006/032692	A1	3/2006
WO	WO 2006/061027	A2	6/2006
WO	WO 2006/061354	A1	6/2006
WO	WO 2006/062680	A1	6/2006
WO	WO 2006/062912	A1	6/2006
WO	WO 2006/075016	A1	7/2006
WO	WO 2006/077262	A1	7/2006
WO	WO 2006/077263	A1	7/2006
WO	WO 2006/089958	A1	8/2006
WO	WO 2006/097111	A2	9/2006
WO	WO 2006/108775	A2	10/2006
WO	WO 2006/120253	A2	11/2006
WO	WO 2006/121921	A2	11/2006
WO	WO 2006/122048	A1	11/2006
WO	WO 2007/000162	A2	1/2007
WO	WO 2007/002523	A2	1/2007
WO	WO 2007/020090	A1	2/2007
WO	WO 2007/065944	A1	6/2007
WO	WO 2007/071255	A1	6/2007
WO	WO 2007/071258	A1	6/2007
WO	WO 2007/093051	A1	8/2007
WO	WO 2007/093182	A2	8/2007
WO	WO 2007/122207	A1	11/2007
WO	WO 2007/140631	A1	12/2007
WO	WO 2007/140783	A2	12/2007
WO	WO 2007/140785	A1	12/2007
WO	WO 2007/141210	A1	12/2007
WO	WO 2007140631	*	12/2007
WO	WO 2008/014791	A1	2/2008
WO	WO 2008/014792	A1	2/2008
WO	WO 2008/048631	A1	4/2008
WO	WO 2008/052545	A1	5/2008
WO	WO 2008/065646	A1	6/2008
WO	WO 2008/092782	A1	8/2008
WO	WO 2008/092958	A2	8/2008
WO	WO 2008/092959	A1	8/2008
WO	WO 2008/033702	A1	11/2008
WO	WO 2008/135098	A1	11/2008
WO	WO 2008/147600	A1	12/2008

(56) **References Cited**

FOREIGN PATENT DOCUMENTS

WO	WO 2008/148714	A1	12/2008
WO	WO 2008/155145	A1	12/2008
WO	WO 2008/155377	A1	12/2008
WO	WO 2009/004026	A1	1/2009
WO	WO 2009/007287	A1	1/2009
WO	WO 2009/010396	A1	1/2009
WO	WO 2009/010399	A1	1/2009
WO	WO 2009/016635	A2	2/2009
WO	WO 2009/033032	A1	3/2009
WO	WO 2009/039013	A1	3/2009
WO	WO 2009/098291	A1	8/2009
WO	WO 2009/098306	A1	8/2009
WO	WO 2009/101130	A1	8/2009
WO	WO 2009/101145	A1	8/2009
WO	WO 2009/106517	A1	9/2009
WO	WO 2009/144272	A1	12/2009
WO	WO 2010/003885	A1	1/2010
WO	WO 2010/003886	A1	1/2010
WO	WO 2010/030602	A1	3/2010
WO	WO 2010/034830	A1	4/2010
WO	WO 2010/072664	A1	7/2010
WO	WO 2010/080715	A1	7/2010
WO	WO 2010/112521	A1	10/2010
WO	WO 2011/012465	A1	2/2011
WO	WO 2011/015659	A1	2/2011
WO	WO 2012/041923	A2	9/2011
WO	WO 2011/121023	A1	10/2011
WO	WO 2012/041784	A1	4/2012
WO	WO 2012/045667	A2	4/2012

OTHER PUBLICATIONS

International Preliminary Report on Patentability completed Jun. 29, 2010 for International Application No. PCT/EP2009/051974.

"Why inset®?" inset® infusion set product overview; http://web.archive.org/web/20040906102448/http://www.infusion-set.com/Default.asp?ID=108; two pages.

* cited by examiner

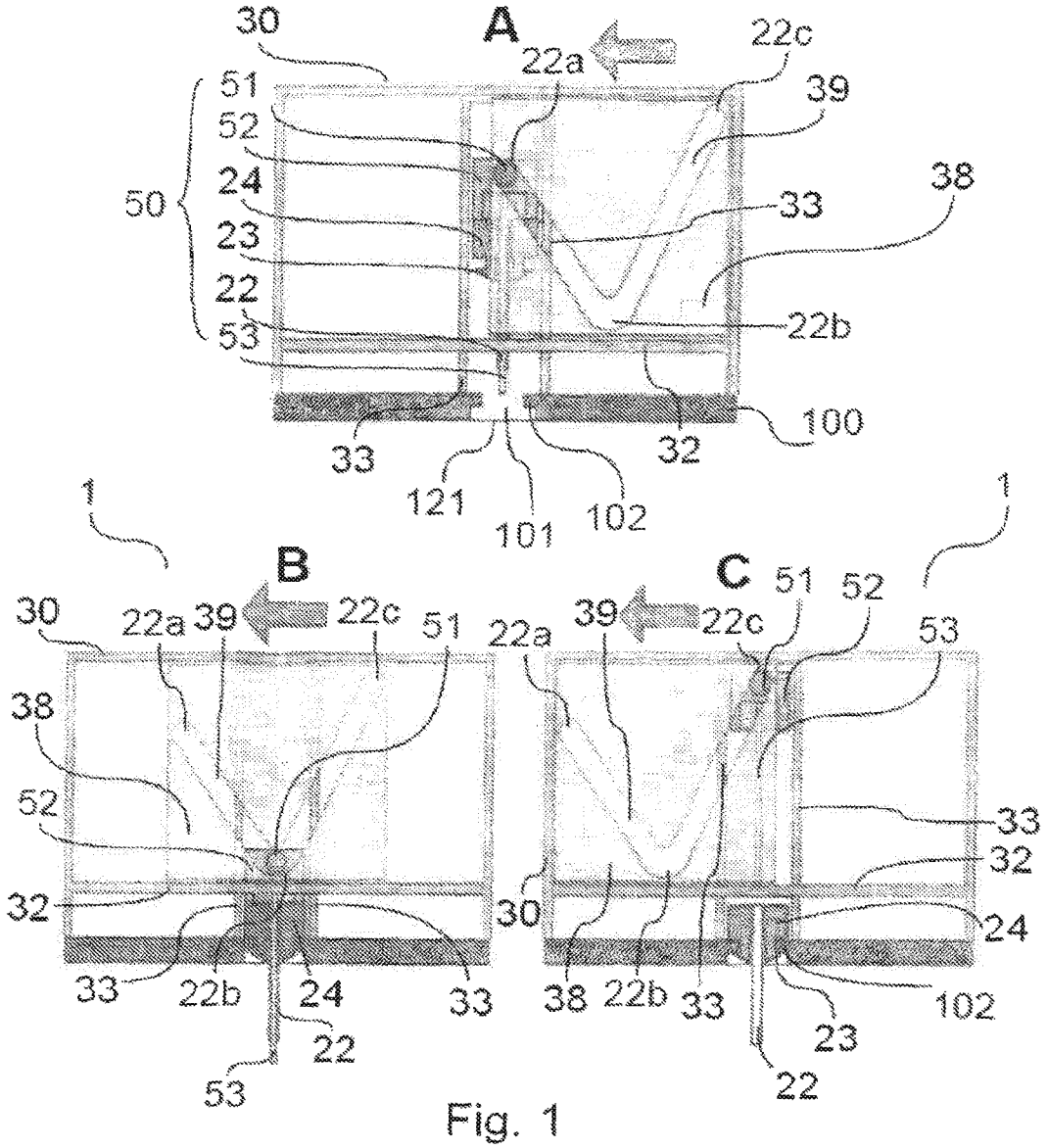
A
30
22a
22c
51
52
24
23
22
53
50
39
33
38
22b
100
33
32
121
101
102
1
1
B
C
30
22a
39
22c
51
22a
39
22c
51
52
53
38
52
33
32
32
30
24
33
22b
24
33
38
22b
33
102
22
23
53
22

Fig. 1

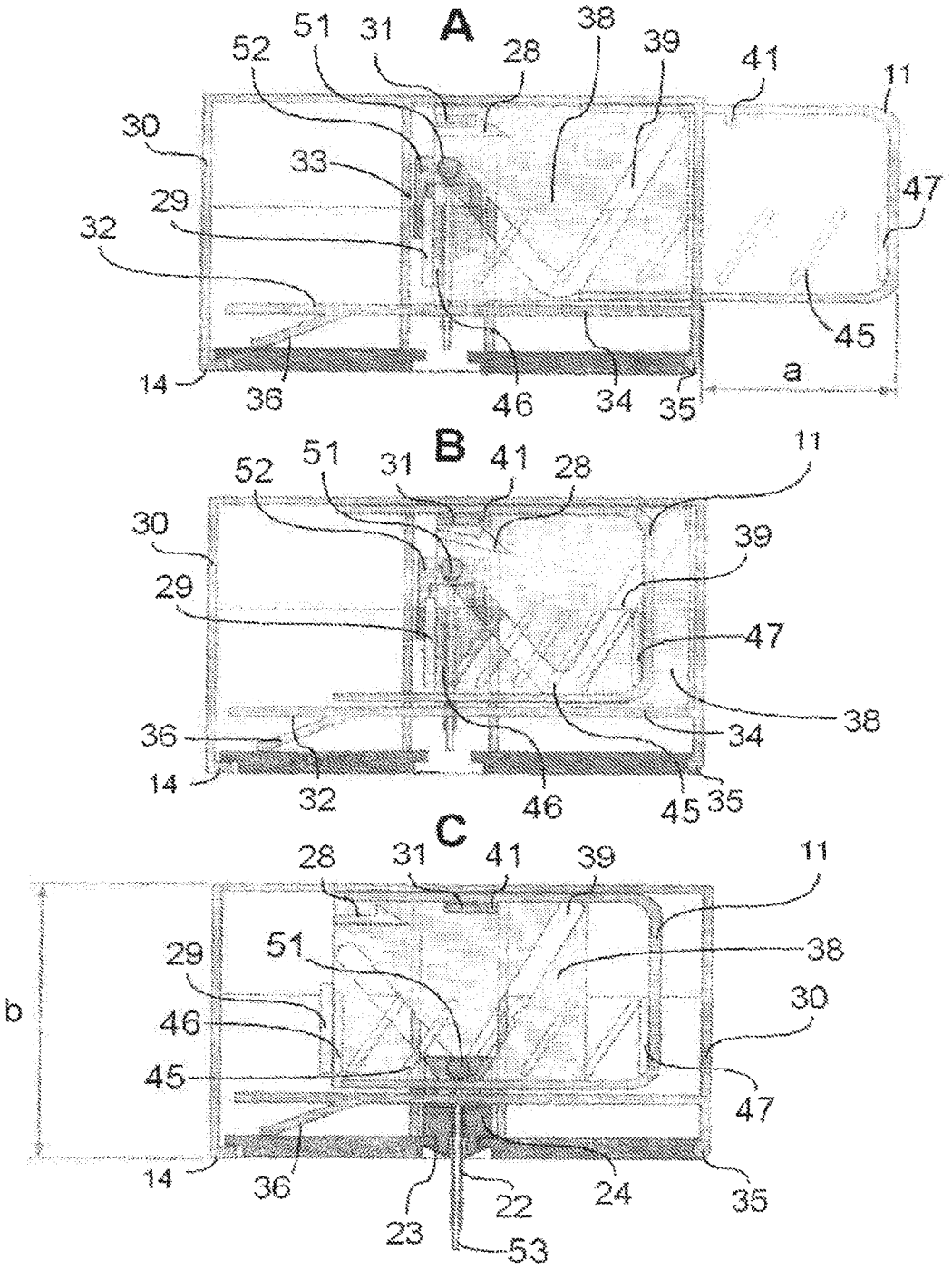
A
51
31
28
38
39
41
11
52
30
33
29
32
47
45
14
36
46
34
35
a
B
51
31
41
28
11
52
30
39
29
47
38
36
34
14
32
46
45
35
C
28
31
41
39
11
29
51
38
b
46
30
45
47
14
36
23
22
24
35
53

Fig. 2

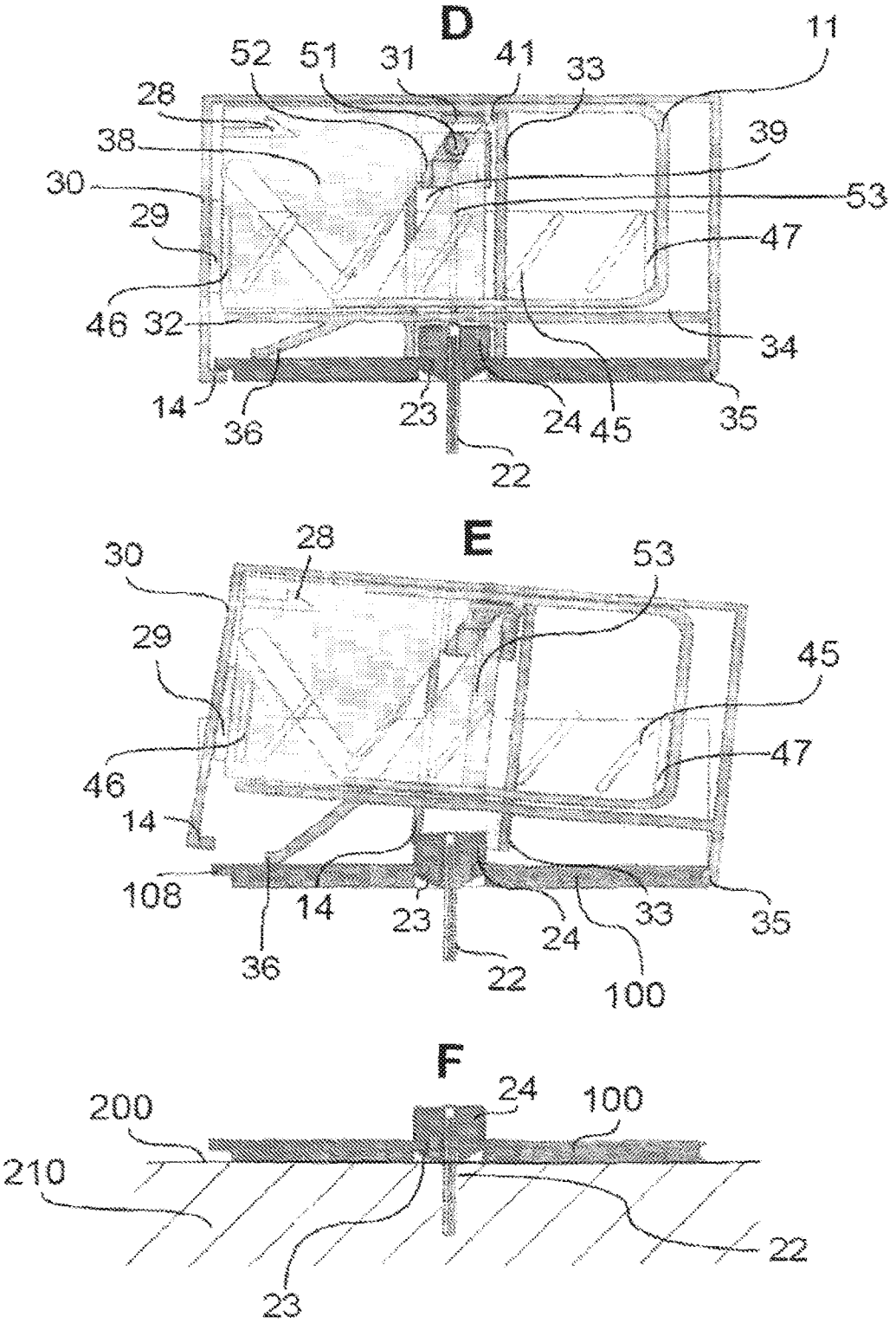
D
52
51
31
41
33
11
28
38
39
30
53
29
47
46
32
34
14
36
23
24
45
35
22
E
30
28
53
29
45
46
47
14
108
14
23
24
33
35
36
22
100
F
200
24
100
210
22
23

Fig. 2

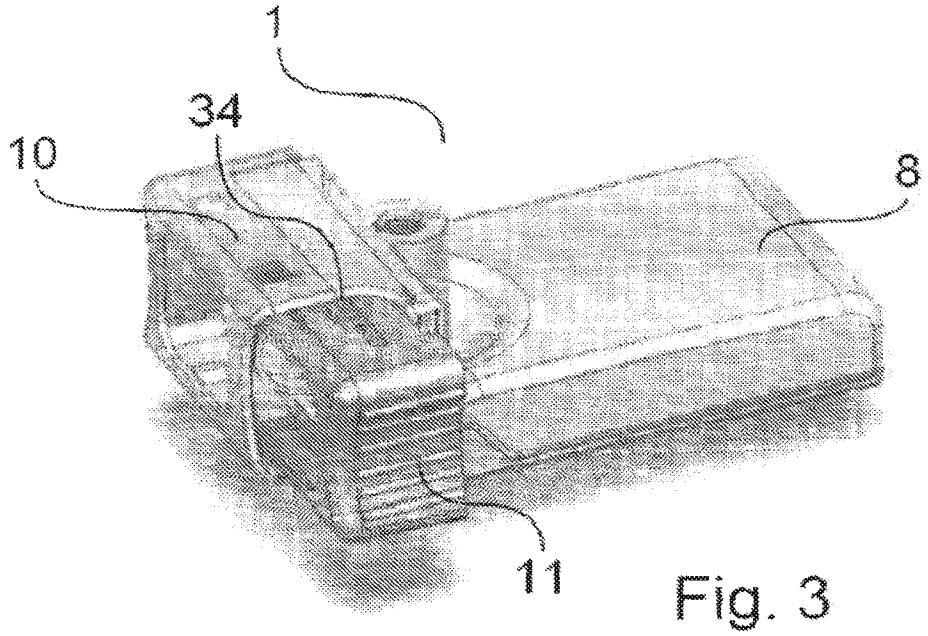

Fig. 3

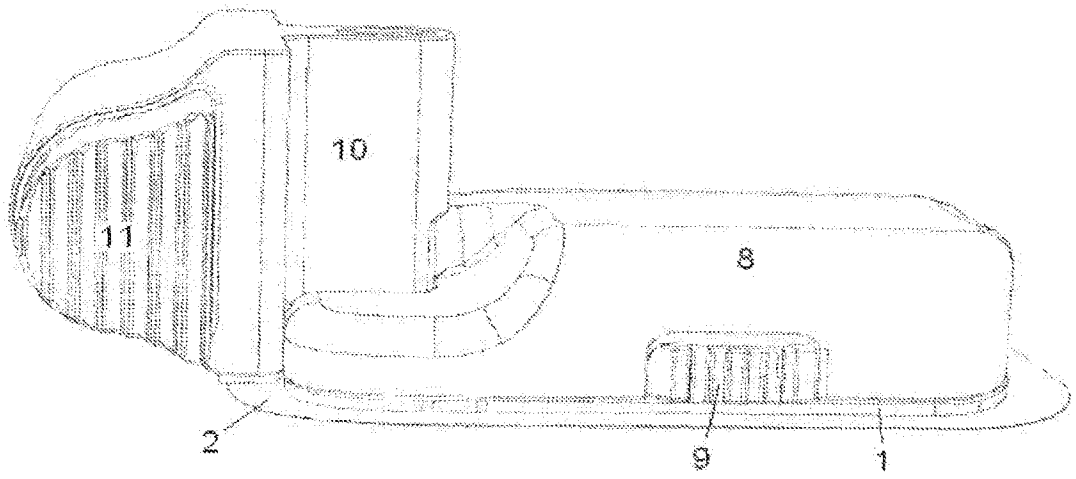

Fig. 4

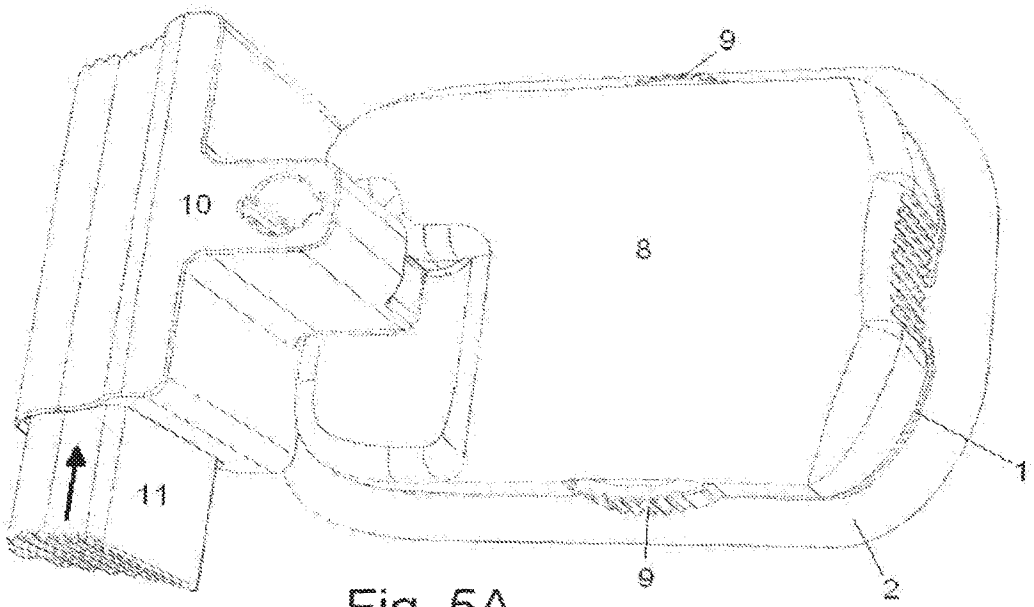

Fig. 5A

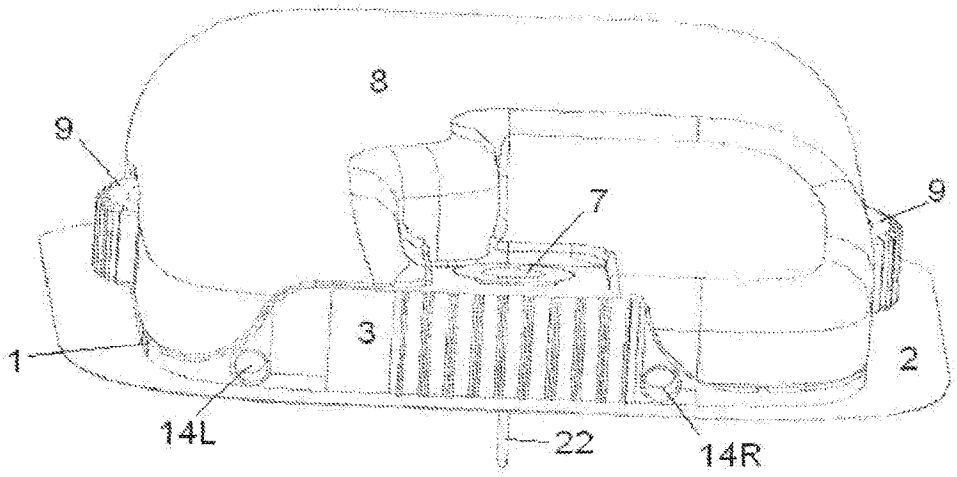

Fig. 5B

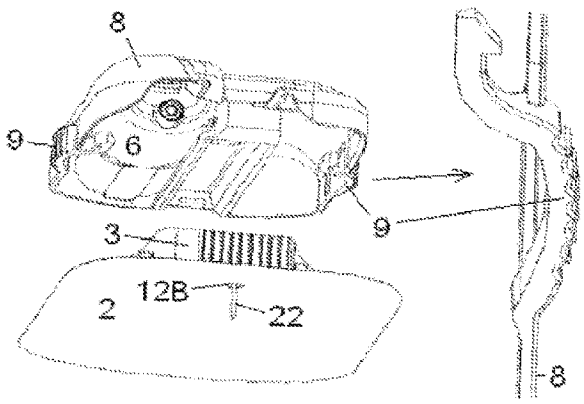

Fig. 6A

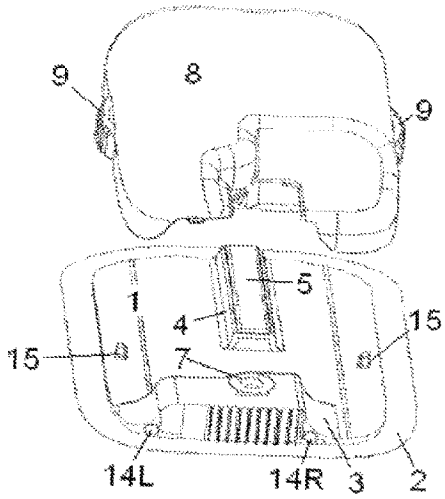

Fig. 6B

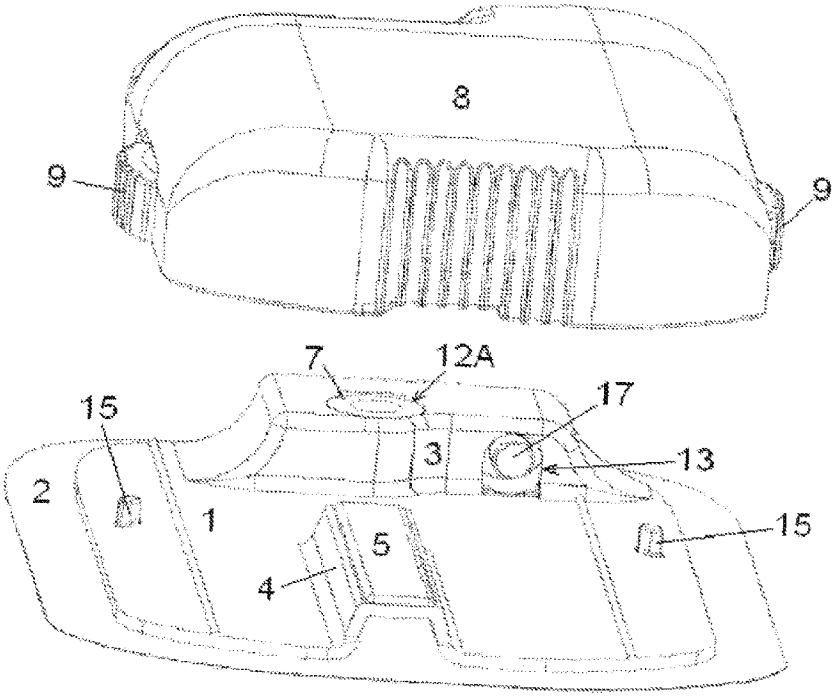

Fig. 6C

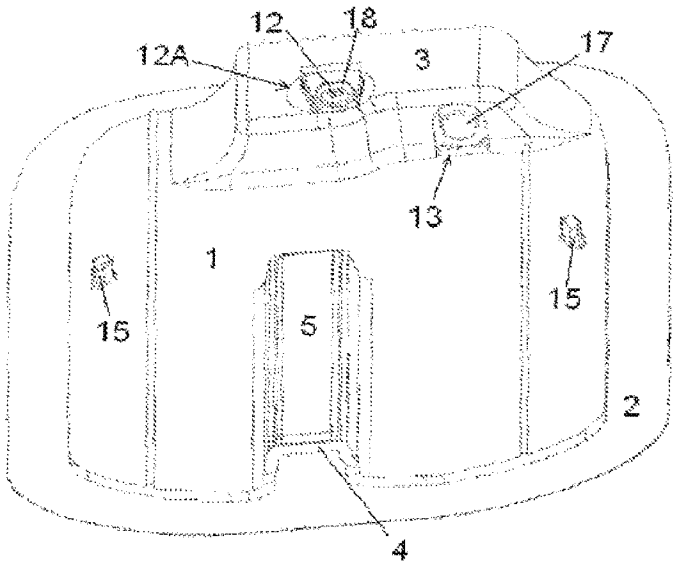

Fig. 6D

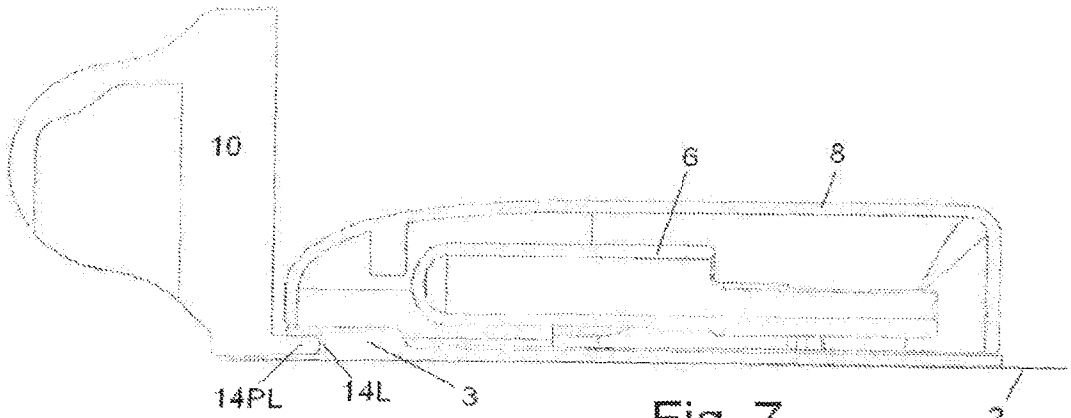

Fig. 7

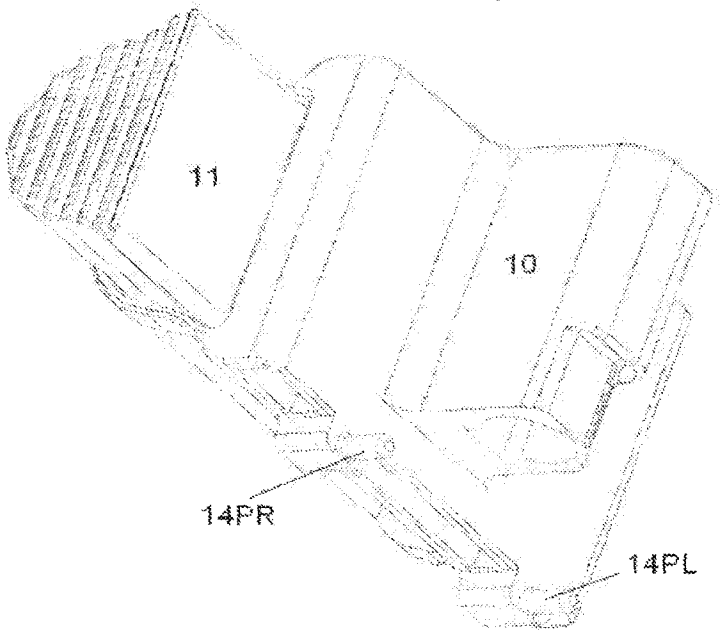

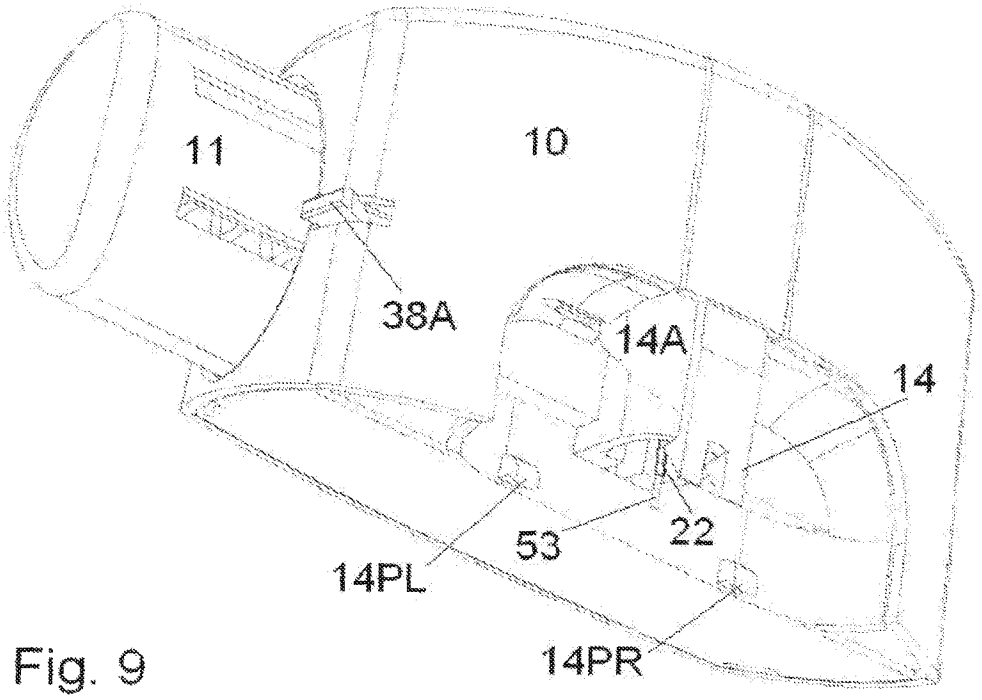

Fig. 9

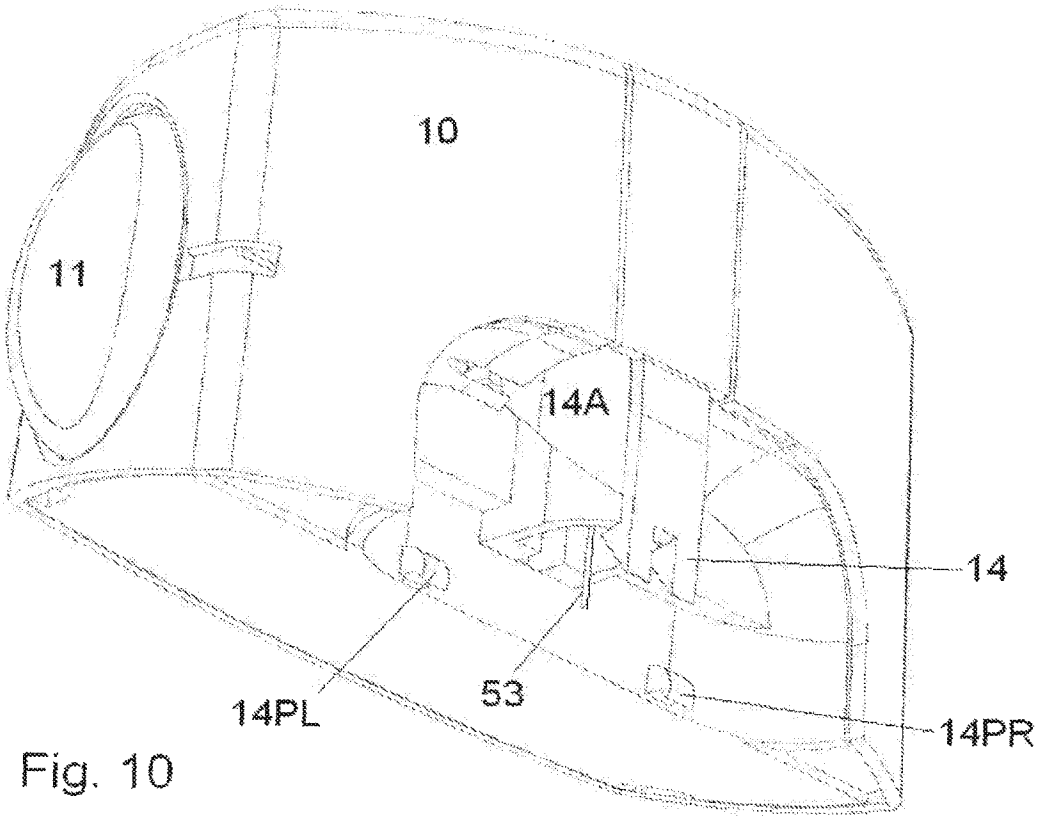

Fig. 10

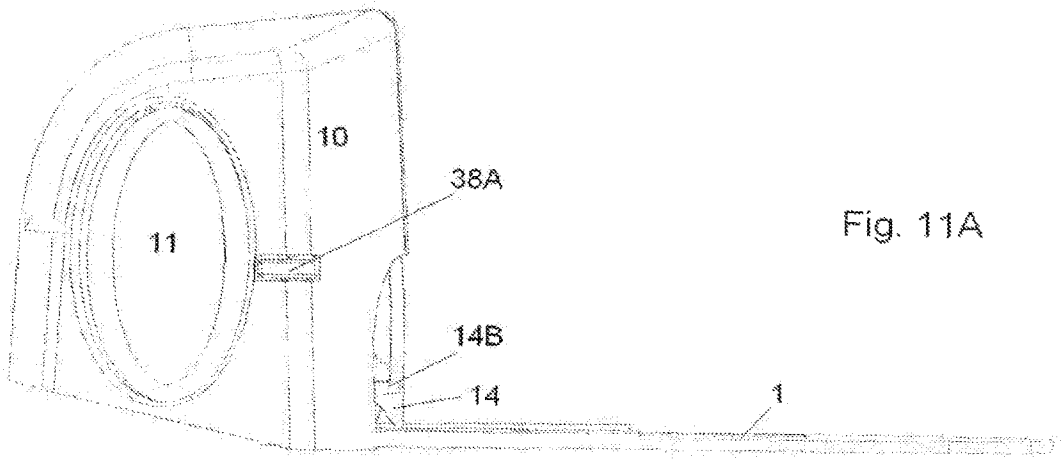

Fig. 11A

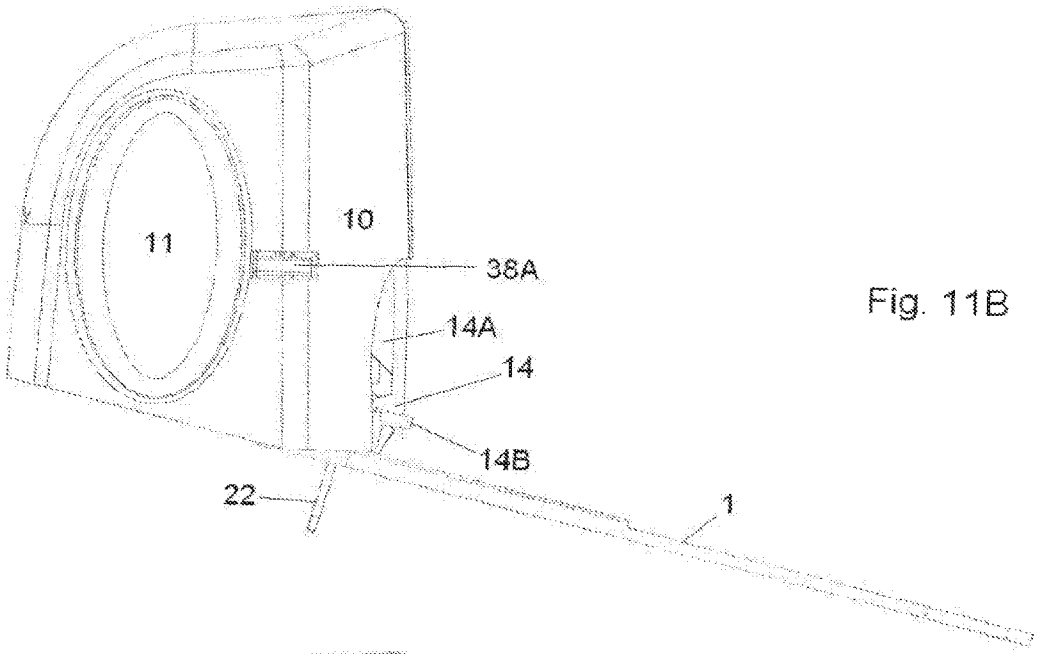

Fig. 11B

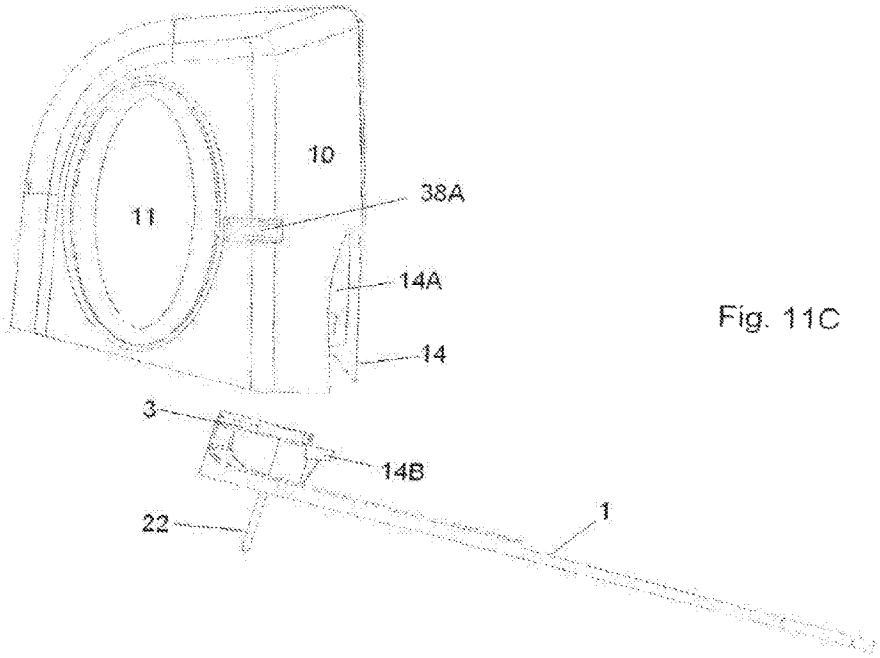

Fig. 11C

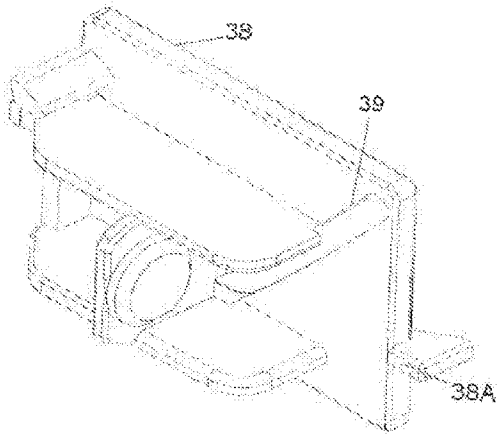

Fig. 12A

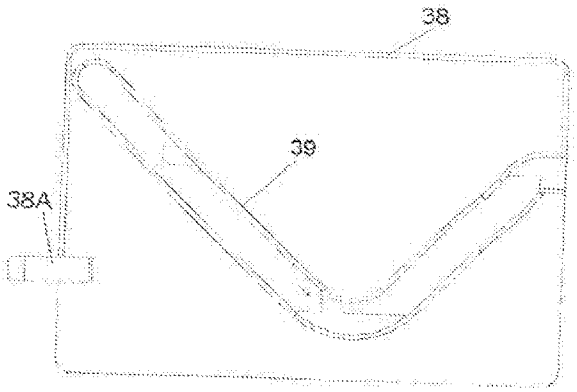

Fig. 12B

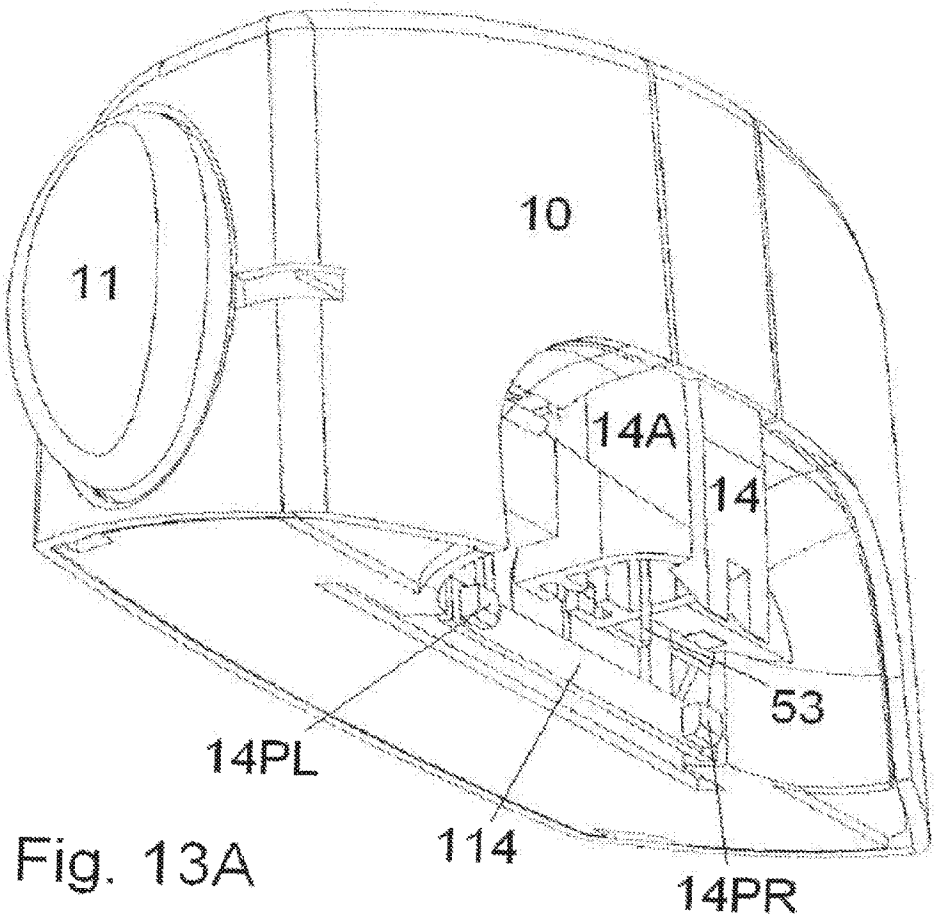

Fig. 13A

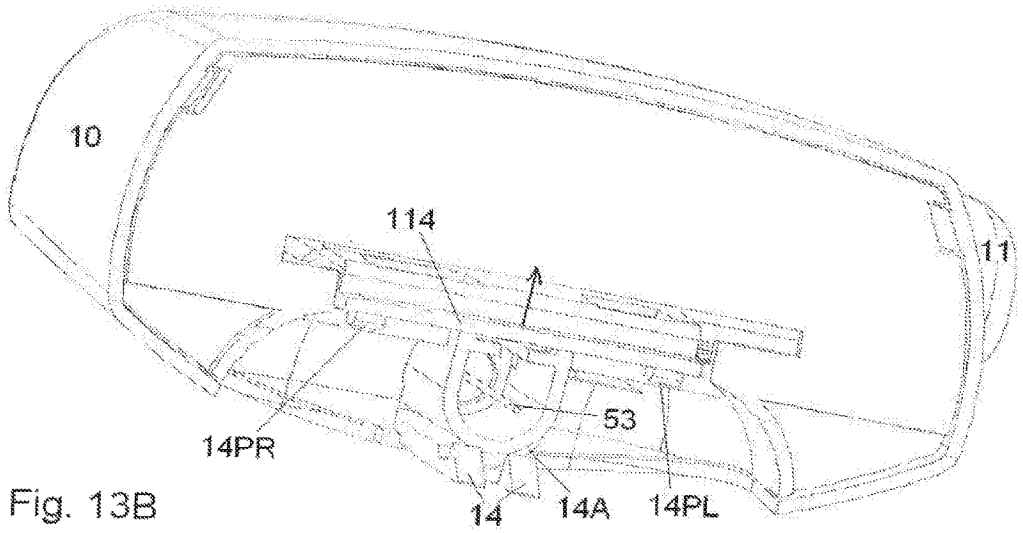

Fig. 13B

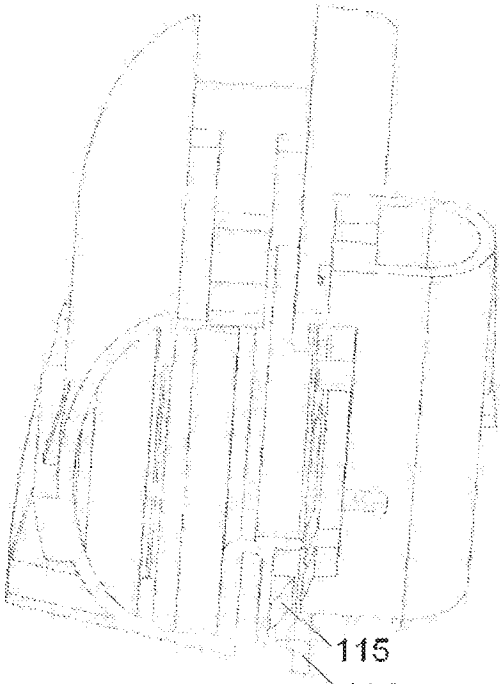

Fig. 14A

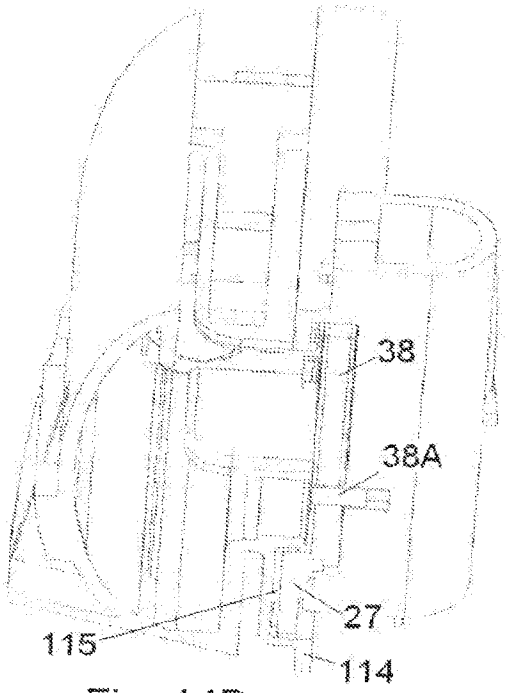

Fig. 14B

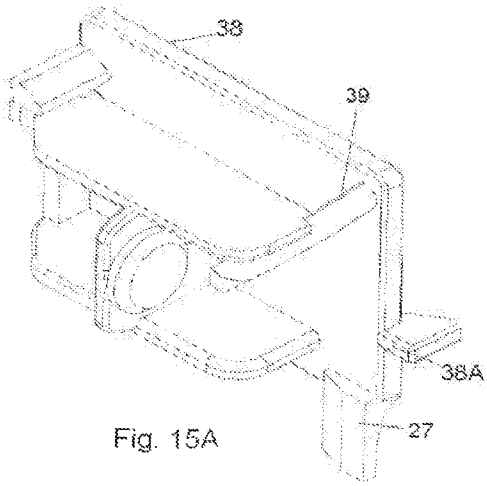

Fig. 15A

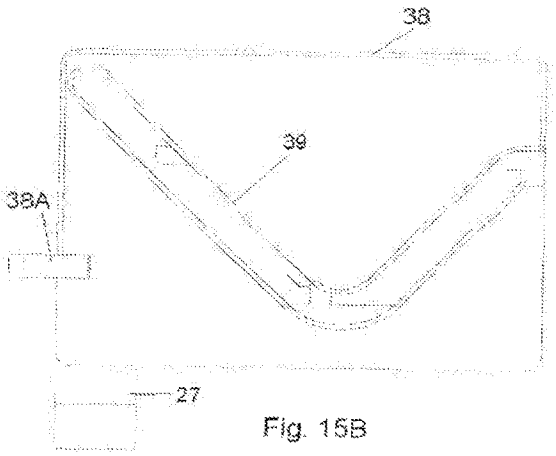

Fig. 15B

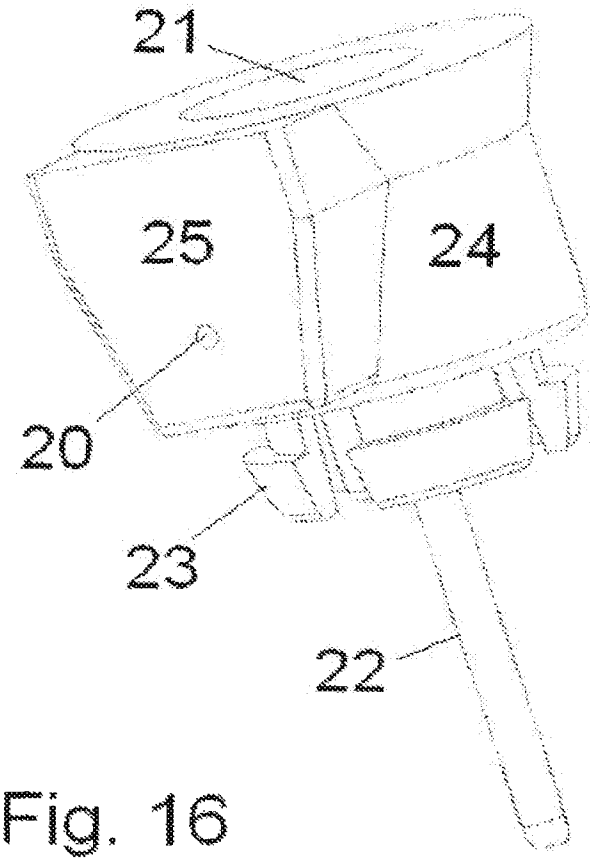

Fig. 16

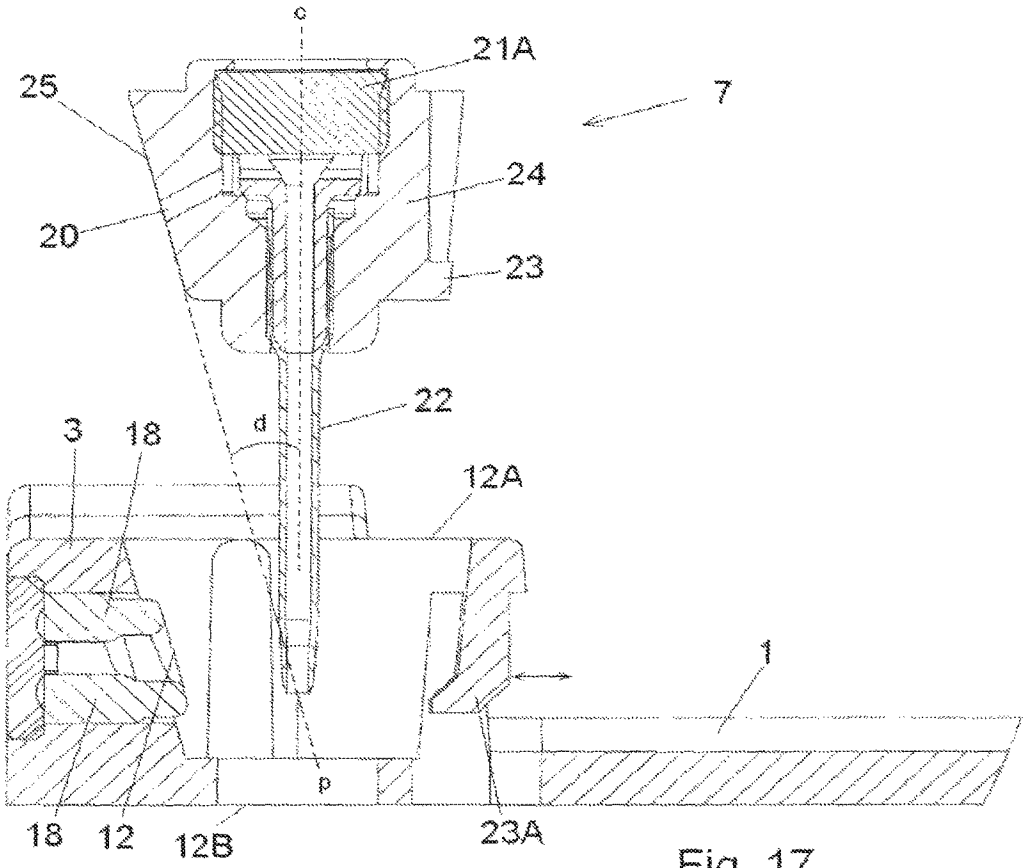

Fig. 17

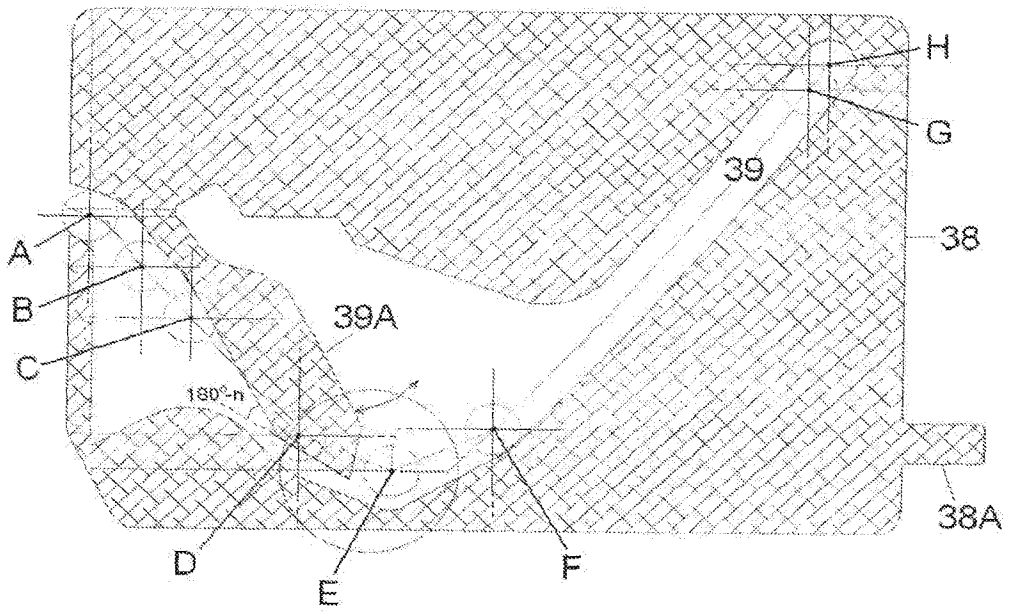

Fig. 18a

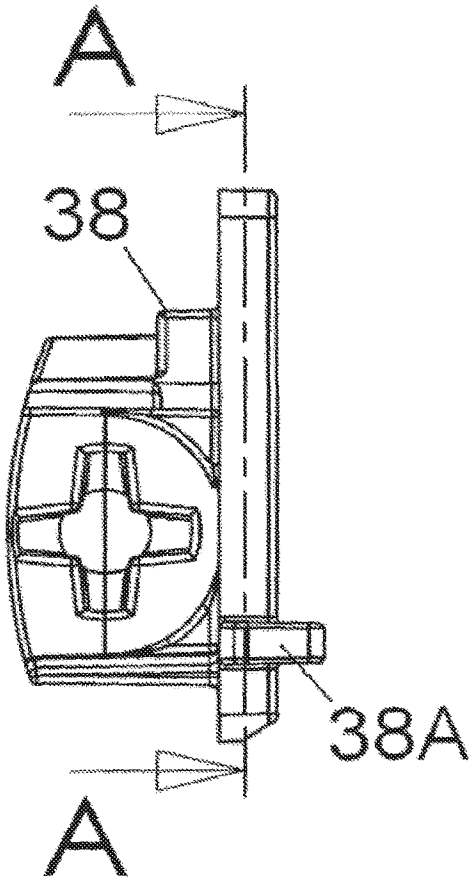

Fig. 18b

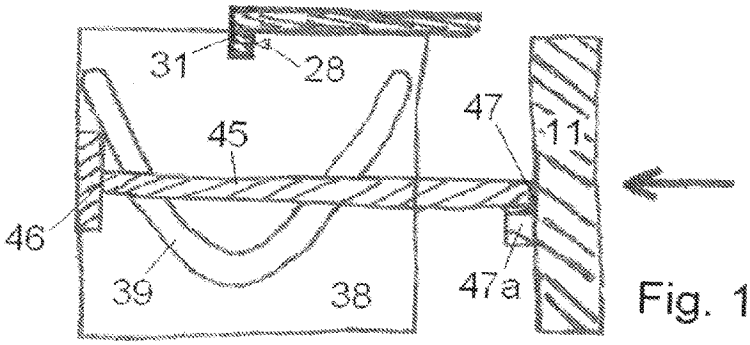

Fig. 19A

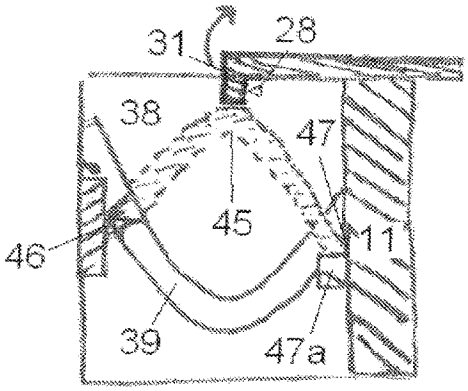

Fig. 19B

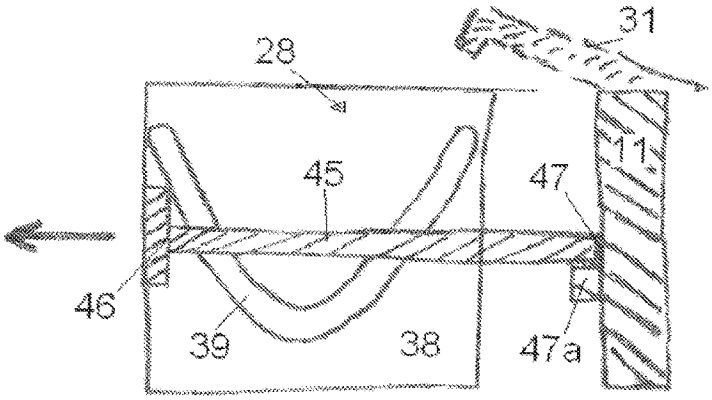

Fig. 19C

INSERTION DEVICE WITH HORIZONTALLY MOVING PART

This application claims the benefit under 35 U.S.C. §371 of International Application No. PCT/EP2009/051974, filed Feb. 19, 2009, which claims the benefit of U.S. Provisional Application Ser. No. 61/030,022, filed Feb. 20, 2008, Danish Patent Application No. PA 2008 00240, filed Feb. 21, 2008, and U.S. Provisional Application Ser. No. 61/095,379, filed Sep. 9, 2008.

TECHNICAL FIELD OF THE INVENTION

The invention concerns an insertion device for inserting a medical device or a part of medical device into the subcutaneous or intramuscular area of a patient.

BACKGROUND OF THE INVENTION

An insertion device (also called inserter or injector) is commonly used in the medical field for inserting medical devices, such as infusion sets and the like, through the skin of a patient in a more or less automated fashion.

Commonly, when using an inserter, the user, i.e. the patient or the treatment provider (e.g. nurse, doctor, relative, or the like) has to apply a force towards the surface of the skin of the patient in order to provide injection of the medical device (needle, cannula, sensor, and the like). This can cause physiological or psychological distress and/or discomfort, and may lead to inappropriate application of the medical device. Many people are afraid of sharp objects, such as injection needles and other penetrating devices, commonly used for medical treatment and therapy. This fear is often irrational, and it may hamper an appropriate medical treatment. For example in the case of self-medication, a lack of administration of an appropriate dose of a required medical composition can lead to complications, which may even be life-threatening. When treating diabetes, e.g. in juveniles, there is a risk that the required insulin-dose may not be self-administered due to irrational fear of the insertion needle, combined with a general lack of knowledge and awareness concerning the consequences of omitting the correct application of the device and dosage.

A further known issue with insertion of medical devices is the risk of contamination of the penetrating member before or during application. This can easily lead to the introduction of an infection to a patient, e.g. through a contaminated insertion needle. The longer such a needle is exposed, the higher the risk of accidental contamination, e.g. by touching the needle with a finger, bringing the needle in contact with an unclean surface, or by airborne contamination, aerosol contamination and the like. Depending on the nature of the contamination (e.g. comprising virus, bacteria, fungus, yeast and/or prion) combined with the general health status of the patient, the resulting infection can rapidly turn into a life threatening situation.

Finally, it is well known that contact with an infected, used needle especially in hospital environments can be life-threatening, and the risk of accidental exposure to contaminated material in the form of a used insertion needle must be minimized.

The document WO 2002/002165 discloses a needle device having a needle retraction mechanism retracting the needle upon removing the device from a skin surface. The needle device comprises a penetrating member N connected to transformation means (**44**), an actuator (**40**) comprising guiding means restricting the movement of the transformation means and guiding the penetrating member N from a first to a second position in the direction of insertion towards the injection site. Further, the needle device comprises a stationary housing (**20**) provided with guiding means restricting the movement of the actuator (**40**). The actuator (**40**) and the attached needle N move in the same direction namely the direction of insertion. According to the present invention the penetrating part moves relative to the moving part and the moving part is fully separated from the penetrating part after insertion. This makes it possible to push the moving part in one direction with a simple spring mechanism while the penetrating member is guided to the injection site in the insertion direction. Separating the units and the direction optimises the possibility of individual control of each part when it comes to e.g. velocity and acceleration.

Thus, there is an obvious need in the art for a robust, reliable, accurate, safe, hygienic, and user friendly insertion device, which addresses the issues discussed above.

SUMMARY OF THE INVENTION

The current invention provides an insertion device for subcutaneously introduction of a penetrating member, where a "penetrating member" is understood to be a needle, a cannula, a sensor or the like. The penetrating member is normally prior and during insertion kept in a position where it is not visible to the patient and where it can not get in contact with the user or the patient before it is actually inserted.

The object of the invention is to provide an insertion device comprising

- a penetrating member connected to transformation means,
- a moving part comprising guiding means which guiding means restrict the movement of the transformation means and guide the penetrating member from a first to a second position in a first direction, i.e. the direction of insertion, towards the injection site, and
- a stationary housing comprising guiding means which guiding means restrict the movement of the moving part, which guiding means guide the moving part in a second direction which is linear and different from the first direction i.e. the direction of insertion.

According to one embodiment the second direction is perpendicular to the first direction but the second direction could be in any angle relative to the first direction, normally in an angle deviating 40-90° from the first direction.

"A stationary housing" means that the housing does not move relative to the insertion site during insertion. Often the contact between the guiding means restricting the movement of the transformation means and the transformation means are "sliding", this indicates that the contact between guiding means and the unit to be guided is continuous i.e. it is not interrupted but keep in contact with the guiding means at all positions.

According to one embodiment the insertion device comprises guiding means which restricts the movement of the penetrating member to a linear movement in the first direction. These guiding means assures that the penetrating member passes into the patients skin in a direction linear to the insertion direction during insertion, the time period defining "during insertion" is the time period which starts when the part of the penetrating member which is to be inserted into the skin of the patient is just about to penetrate the skin surface at the injection site and ends when the part of the penetrating member which is to be inserted is fully inserted. If the guiding means are not present the linear

movement would be assured alone by regulation of the velocity of the penetrating member which is difficult especially when using simple and non-expensive components.

According to a further embodiment of the insertion device the first direction form an angle β to the surface in which the penetrating member is to be inserted, and where 30°≤β≤90°. The angle β is defined as the direction which the penetrating member moves in from the time just before the penetrating member touches the surface on which it is mounted and until the member is in its final position below the surface. This movement is linear. The penetrating member can be inserted at an inclined angle where β: 30°≤β<85° or 95°<β≤150°; normally an inclined angle will be around 45° i.e. 30°≤β<60° or 120°≤β<150°; or 40°≤β<50° or 130°≤β<140°; where said penetrating angle β is defined as the angle between the direction of penetrating movement of the penetrating member and surface on which it is mounted.

According to this embodiment of the insertion device the angle β can be essentially perpendicular to the surface on which it is mounted. That the penetrating direction is essentially perpendicular to the patients skin surface means that penetrating angle β=90°, normally a small deviation from 90° such as 85°≤β<95° would also be considered perpendicular to the skin surface.

According to a further embodiment of the insertion device the direction of the moving part during insertion is linear and essentially parallel to the surface on which it is mounted. That the direction is essentially parallel means that the angle between the direction of the moving part and the mounting surface at the insertion position is around 0°. There can be an inclination angle α: −45°<β<45°; wherein a positive inclination angle a indicates a movement inclined towards the skin surface, and a negative inclination angle indicates a movement inclined away from the skin surface. Normally there will be a deviation <10°, i.e. −10°<α<10°, between the surface of the patient's skin and the direction of the moving part. That the direction of the movement of the moving part is linear means that the moving part moves from a first point to a second point along a straight line.

According to a further embodiment of the insertion device a further movement of the moving part can provide a retraction movement of said holding means and/or an insertion needle. "A further movement" means that after a first movement i.e. the linear movement has ended at a second point, the forward movement of the moving part can continue to a third point where the forward movement of the moving part is stopped or alternatively the linear movement of the moving part can be reversed or take a second direction.

According to a further embodiment of the insertion device the insertion part can attached to a base part which base part can be fastened to the surface where the penetrating member is to be inserted and the penetrating member will be brought in contact with the base part upon insertion.

According to a further embodiment of the insertion device the penetrating member comprises a cannula, a body holding said cannula and retention means securing the body and the cannula at the surface of insertion. The cannula is held unreleasably by the body because the cannula is very small and difficult to handle by itself.

According to this embodiment of the insertion device the retention means can interact with interacting means on the base part upon insertion and retain the body of the penetrating member to the base part.

According to a further embodiment of the insertion device the guiding means of the moving part comprises a groove in which the transformation means of the penetrating member can slide. The groove can be essentially V- or U-shaped defining a starting point (**22***a*), a middle point (**22***b*) and an end point (**22***c*) for the penetrating member (**50**) or at least parts of the penetrating member (**50**). Further the slope of the groove from the starting point to the middle point together with the velocity with which the moving part moves forward defines velocity of insertion. The slope of the groove is defined in relation to a coordinate system where the x-axis is placed horizontally i.e. along the surface on which the base part is placed and in the direction of the line formed by the moving part's forward movement (the moving part moves along the x-axis towards −∞), the y-axis is placed perpendicular to this surface. In such a coordinate system the groove will have a negative slop between the middle point and the starting point and the nominal size of the slope will influence the velocity of the penetrating member during insertion, the steeper the slope the faster the insertion. The slope or the tangent to the slope if the groove is curved i.e. not a straight line will normally be between −1 and −2. Further the slope of the groove from the middle point to the end point together with the velocity with which the moving part (**38**) moves forward defines velocity of retraction. The groove will have a positive slop between the middle point and the end point and the nominal size of the slope will influence the velocity of the penetrating member during retraction of a separate insertion needle or other parts of the penetrating member, the steeper the slope the faster the retraction. The slope or the tangent to the slope will normally be between 1 and 2.

According to a further embodiment of the insertion device the moving part can be moved as a consequence of either direct or indirect user input. That means that a user either provides a direct force to the device i.e. the user pushes or pulls the moving part or the user activates a spring or the like which then pushes or pulls the moving part.

According to this embodiment the insertion device moving of the moving part can be initiated by activating an activation part and the activation part is in contact with an energy storing member and influences the state of the energy storing member upon activation. Further the energy storing member can be a spring, and said spring is in a relaxed or partially relaxed state before activation and in a biased or distorted state after actuation of the activation part.

According to this embodiment of the insertion device the energy storing member provides the energy required for moving the moving part from a start position to a stop position.

According to one embodiment of the insertion device the housing can comprise retention means retaining the moving part in a start position, the moving part comprises locking means interacting with the retaining means in the start position and the activation part comprises interaction means interacting with the locking means upon activation. The locking means can be released from a locked position through interaction of the interaction means of the activation part. Further the locking means can have the form of a hook provided with an inclined surface pointing in the direction opposite to the forward movement of the activation part and the retention means can be a part protruding from the housing which can be caught by the hook formed by the locking means.

According to these embodiments the forward movement of the activation part is stopped through contact between the interaction means of the activation part and the retention means for the moving part.

According to one embodiment of the invention the groove is provided with a flexible part (**39**A) between the starting

point (**22***a*) and the middle point (**22***b*) which flexible part (**39**A) can move in a direction opposite the direction of insertion. The flexible part (**39**A) can have the form of a protruding pivotable part (**39**A) having

- a contact surface which contact surface during movement is in contact with the transformation mean (**51**) of the cannula part (**7**) and pushes the cannula part (**7**) towards the injection site, and
- a non-contact surface opposite the contact surface which non-contact surface can move into an open room without getting into touch with other parts.

According to this embodiment the contact surface can have the form of two straight lines or flat surfaces connected in an angle n close to the point (D) (see FIG. **18***a*) where the cannula part (**7**) makes contact with the sealing of the surface plate (**1**), normally 10 degrees<n<45 degrees.

According to a further embodiment of the insertion device the moving part can be encompassed by the housing.

According to a further embodiment of the insertion device a base part can be fastened to the mounting surface and the insertion device can comprise means which means provide fastening of the insertion device to the base part before insertion and non-fastening of the insertion device to the base part upon insertion of the cannula.

According to this embodiment of the insertion device the means providing fastening and releasing of the insertion device from the base part comprise fastening means releasably locking the housing of the insertion device to the base part, and release means releasing the housing from the base part after insertion of the penetrating member. The release means can comprise an elastic member in a biased or distorted state which upon release of the fastening means pushes the housing of the insertion device away from the base part. The elastic member can have the form of a leaf spring which is positioned between the base part and the insertion device; the leaf spring will be distorted when the insertion device is locked to the base part.

According to these embodiments of the insertion device the fastening means which releasably lock the housing to the base part can have the form of a hook of a hard material being an integrated part of the housing catching a corresponding part of the base part. That the hook is an integrated part of the housing means that it forms part of the housing i.e. it is unreleasably locked to the housing and e.g. constructed as a part e.g. of a wall of the housing.

According to these embodiments of the insertion device the fastening means has the form of one or more protruding parts which protruding parts fit into corresponding openings in the base part. The one or more protruding parts can be removed from the corresponding openings in the base part by a rotating movement and the insertion device is mounted to the base part in such a distance from the surface in which the penetrating member is inserted that the distance allows for a rotating movement of the insertion device. The distance from the surface in which the penetrating member is inserted is obtained by constructing the insertion device with an inclining proximal surface which proximal surface as a result of the rotating movement gets parallel with the surface in which the penetrating member has been inserted.

According to these embodiments of the insertion device the fastening means can be flexibly connected to the stationary housing. The moving part can be provided with one or more protruding parts which upon movement of the moving part get in contact with the flexibly connected fastening means and through this contact release the insertion device from the base part.

According to a further embodiment of the insertion device the insertion device comprises means to perform the following operations upon actuation of an activation part:

(a) loading of a spring;

(b) movement of the moving part from a start position to a stop position; and

(c) transformation of said movement of the moving part to an insertion movement of a penetrating member, followed by a retraction movement of a holding means of the penetrating member.

This embodiment can further comprise means which can:

(d) release the housing from the base plate upon insertion of the penetrating member.

According to these embodiments of the insertion device the housing can be connected to the base plate via connection means. The connection means can comprise at least one hinge and at least one locking member.

According to these embodiments of the insertion device the housing can be released from the base plate by interaction of a releasing member with a part of a sidewall of the housing. Said part of a sidewall of the housing can be flexible, and can be twisted (pivoted) in relation to the remaining housing.

According to a further embodiment of the insertion device the penetrating member has a first position (i), and a second position (ii) relative to the stationary housing, where the penetrating member in the first position (i) is fully retracted and does not protrude from the housing of the insertion device; and in the second position (ii), a part of the penetrating member such as the cannula and/or insertion needle protrude maximally from the housing (**30**). The first retracted position is the position of the penetrating member before insertion and the second maximally protruding position is the position of the penetrating member just as the penetrating member has been fully inserted. The penetrating member can have a further third position (iii), where the cannula protrudes maximally from the housing, and the holding means and/or insertion needle are retracted into the housing and are no longer in contact with the body holding the cannula.

According to these embodiments of the insertion device the body of the penetrating member in the second position (ii) and in the third position (iii), is retained through interaction of said retention means of the body with interacting means on a base part.

According to a further embodiment of the insertion device the moving part can have a first position (i*), a second position (ii*), and optionally a third position (iii*) in relation to the housing and in the first position (i*) and the optionally third position (i*) the guiding means via the transformation means hold the holding means in a position retracted from the patients skin and in the second position (ii*) the guiding means hold the holding means in a position close to or in contact with the patient.

According to this embodiment of the insertion device the moving part is held in the first position (i*) by retention means unreleasably fastened to the housing, locking means unreleasably fastened to the moving part and interaction means unreleasably fastened to the activation part.

According to a further embodiment of the insertion device the kit further comprises a base part to which base part the insertion device is fastened at least before insertion and a delivery part which can be fastened to the base part and form a fluid path to a penetrating member inserted by the insertion device.

Definitions

"Parallel" or "essentially parallel" as used herein refers to a second movement in a direction, plane, item or the like defined in relation to a first or a reference plane or direction which reference plane or direction has a direction defined as the angle $\alpha=0°$; and the second plane or direction deviates at maximum ±10°; normally not more than ±5° from the first or reference direction α.

In the context of the application "horizontal" or "essentially horizontal" means that a movement in a direction, a direction, plane, item or the like is horizontal or essentially horizontal is parallel or essentially parallel to the surface of the skin of a patient as defined above. For example, the base part to which the insertion device is fastened can be horizontal, or essentially horizontal, parallel or essentially parallel to the skin.

"Perpendicular" or "essentially perpendicular" as used herein refers to a second movement in a direction, a direction, plane, item or the like defined in relation to a reference plane or direction which reference plane or direction has a position or a direction in the angle $\beta=0°$; and the second plane or direction deviates between 80-100°; normally between 85-95° from the first reference β.

In the context of the application "Transversal" or "essentially transversal" can be used interchangeably with perpendicular or essentially perpendicular as defined above.

"Means": As used herein, the expression means can comprise one or more means. This is irrespective, if with respect to grammar, the verb relating to said means indicates singular or plural.

BRIEF DESCRIPTION OF THE DRAWINGS

A detailed description of embodiments of the current invention will be made with reference to the accompanying figures, wherein like numerals designate corresponding parts in different figures.

FIGS. **1**A-C show a cross section of a first embodiment of an insertion device according to the invention in three states: A: before activation; B: just after insertion; C: after retraction of insertion needle.

FIGS. **2**A-F show a cross section of a second embodiment of an insertion device in six states. A: before activation; B: after activation, C: just after insertion, D: after retraction of insertion needle, E: after release of inserter housing and F: after removal of insertion device from base part.

FIG. **3** shows a first embodiment of an assembly comprising an insertion device according to the invention.

FIG. **4** shows a second embodiment of an assembly comprising an insertion device according to the invention.

FIGS. **5**A and **5**B show the second embodiment of the assembly, in FIG. **5**A the insertion device is mounted on the base part and in FIG. **5**B the insertion device has been removed from the base part.

FIG. **6** shows second embodiment of the assembly without the insertion device and having the delivery part separated from the base part A: seen from below; B: seen from above; C: seen from above and showing the connection part of the base part and D: showing the base part alone seen from above.

FIG. **7** shows a longitudinal cut through an assembly as shown in FIG. **3**-**6**, the cut is placed at the position of one of the fastening means for the insertion device.

FIG. **8** shows the insertion device without being attached to the base part.

FIG. **9** shows a third embodiment of an inserter to be used with the assembly in a state before insertion of a cannula part.

FIG. **10** shows the same embodiment of an inserter as FIG. **9** after insertion of a cannula part.

FIGS. **11**A-C show how the embodiment of the inserter shown in FIGS. **9** and **10** are being detached from a base part of an assembly according to the invention.

FIGS. **12**A and **12**B show an embodiment of a moving part to be used with an assembly as shown in FIG. **9**-**11**.

FIGS. **13**A and **13**B show a fourth embodiment of an inserter to be used with the assembly in a state after insertion of a cannula part.

FIGS. **14**A and **14**B show the internal parts of the inserter housing of the fourth embodiment of the inserter.

FIGS. **15**A and **15**B show an embodiment of a moving part to be used with an assembly as shown in FIG. **13**-**14**.

FIG. **16** shows one embodiment of a penetrating member which can be used with the assembly.

FIG. **17** shows a cut-through view of a second embodiment of a penetrating member which can be used with the assembly.

FIG. **18***a* shows an embodiment of a moving part having an increased tolerance. FIG. **18***b* shows how the moving part **38** is viewed in FIG. **18***a*.

FIG. **19** shows a driving mechanism comprising a flat spring which can be used to drive the moving part forward in any of the illustrated embodiments of the inserter

DETAILED DESCRIPTION OF THE INVENTION

FIGS. **1**A-**1**C shows one embodiment of an insertion device **1** for inserting a penetrating member **50** according to the present invention.

The insertion device **1** comprises a housing **30**, a base part **100**, a moving part **38** and a penetrating member **50**. For clarity, the moving part **38** is represented in a semi-transparent fashion. The FIGS. **1**A, **1**B and **1**C show the penetrating member **50** in three different positions relative to the moving part **38**.

The penetrating member **50** comprises holding means **52** holding the penetrating member **50**, transformation means **51** attached to the holding means **52** of the penetrating member **50**, a body **24**, a cannula **22**, and an insertion needle **53**. The cannula **22** is according to this embodiment a soft cannula which needs to be inserted with the help of an insertion needle **53** which is attached unreleasably to a part of the insertion device and not to the penetrating member **50**. The cannula **22** is attached unreleasably to the body **24**. Furthermore, the body **24** comprises retention means **23** for fastening of the cannula **22** to the base part **100** when the cannula **22** has been fully inserted. According to this embodiment the retention means **23** are formed as mechanical hooks which can be forced inward i.e. toward the centre where the cannula **22** is positioned. As the mechanical hooks are fastened to the body **24** in a flexible way the hooks will return to their original position after having been forced towards the centre, the flexibility will normally be due to the properties of the material used to produce the body, the hooks and the connection formed between them.

In another embodiment of the invention, the penetrating member **50** comprises a sensor or both a sensor and a cannula. In a further embodiment of the invention, the penetrating member **50** comprises more than one cannula **22** e.g. a plurality of cannula and/or a plurality of sensors.

The housing **30** comprises guiding means **32** for the moving part **38** and guiding means **33** for the penetrating member **50**. The guiding means **32** for the moving part **38** according to this embodiment comprises surfaces of the inner walls of the housing **30** along which the moving part **38** can slide and the guiding means **33** for the penetrating member **50** comprises an upright tube-like shape. The moving part **38** is provided with transformation means in the form of a V-shaped opening which is form to fit closely with the transformation means **51** of the penetrating member **50**. The housing **30** is releasably connected to the base part **100**, and can be disconnected from the base part **100** after the penetrating member **50** has been inserted. When connected, the housing **30** and the base part **100** encloses the penetrating member **50**, the moving part **38**, and the guiding means **32**, **33** for the moving part **38** and the penetrating member **50**, respectively thereby providing a unit.

The base part **100** comprises an opening **101**, which is dimensioned to allow passage or entering of the penetrating member **50** or at least a part of it, such as the cannula **22**, the injection needle **53** and the retention means **23**.

The base part **100** and the housing **30** are normally individual elements, which elements can be separated in a reversible or an irreversible fashion. According to the present embodiment the opening **101** comprises interaction means **102**, adapted to interact with the retention means **23** of the body of the penetrating member **50**. The opening **101** can be closed and/or protected by a seal **121** which seal **121** is either removable or can be penetrated by the penetrating member **50**. The seal **121** can cover a large area of the base part **100** and if the base part **100** is partly constituted by a mounting pad with an adhesive surface the seal **121** can be a release layer protecting the adhesive surface before use.

The guiding means **32** for the moving part **38** provides a directional controlled movement of the moving part **38** essentially within the housing **30**. In the depicted embodiment the moving part **38** can move essentially parallel, i.e. essentially horizontal relative to the base part **100**, guided by the guiding means **32**. Such a movement can be characterised as a sliding movement.

The movement performed by the moving part **38** is a longitudinal movement, i.e. a linear movement relative to the housing **30**. The means used to initiate and maintain the movement of the moving part **38** can either be provided directly by the user i.e. the user pushes or pulls the moving part **38** or it can be provided by mechanical means such as a spring which only has to be activated by the user

The guiding means **33** for the penetrating member **50** which are a part of or connected to the moving part **38** provide a movement of the penetrating member **50** in a direction different from the direction of movement of the moving part **38**. This feature has at least two advantages: 1. the user's actions when activating or pushing the moving part **38** is less likely to influence the actual insertion of the penetrating member **50**, and 2. the insertion device can be constructed in a smaller and more compact manner.

According to the embodiment of FIG. **1** the direction of movement of the penetrating member **50** is essentially perpendicularly to the direction of movement of the moving part **38**. The guiding means **33** for the penetrating member can comprise one or more parts which together provides a well defined track or tube along or in which the penetrating member can slide e.g. the guiding means **33** may comprise a hollow, cylindrical element fastened to the housing **30**, the penetrating member **50** can move inside the cylindrical element along the longitudinal axis of said cylindrical element, comparable to the movement of a piston in a cylinder. Such a movement can be described as a sliding movement as the contact between the inner surfaces of the cylindrical element and the outer surfaces of the penetrating member **50** provides the guiding. Alternatively, the guiding means **33** of the penetrating member **50** can comprise one or more bars, governing the direction of movement of the penetrating member **50**. As seen in FIG. **1**, the guiding means **33** for the penetrating member **50** according to this embodiment extend from the inner ceiling of the housing to the base part **100**. The guiding means **33** of the penetrating member **50** is not necessarily attached to the base part **100**. The guiding means **33** normally e.g. rest against and/or touch and/or are connected with the base part **100**. In the depicted embodiment, the guiding means **33** of the penetrating member **50** is connected to the housing **30** at the inside of the upper surface ("ceiling"), and at one or more side ("wall") of the housing **30**.

The guiding means **39** or the transformation means of the moving part **38** for the transformation means **51** of the penetrating member **50** defines a track. This track extends from a starting point **22***a* to a middle point **22***b* and ends at an end point **22***c*. As seen in FIG. **1**, this track is V-shaped, or essentially V-shaped. In the depicted embodiment, the guiding means **39** of the moving part **38** are provided as a continuous grove or through going opening within the moving part **38**. The middle point **22***b* is closer to the base part **100** than the starting point **22***a*, and also closer to the base part **100** than the end point **22***c*, also, the starting point **22***a* is closer to the base part **100** than the end point **22***c*.

It is not essential how the starting point **22***a* and the end point **22***c* varies relative to each other, i.e. it would be possible to have an embodiment where the end point **22***c* is closer to base part **100** than start point **22***a* or an embodiment where the starting point **22***a* and the end point **22***c* have the same distance to the base part **100**. It should though be assured that the starting point **22***a* is placed in a distance from the base part which is far enough to keep the end of the cannula **22** and the end of a separate insertion needle **53** inside the housing **30** before insertion.

According to the invention and as illustrated in FIG. **1A-1C**, the insertion device **1** is adapted to provide:

(i) a first state (FIG. **1**A), where the penetrating member **50** is in the starting position **22***a*, it is fully retracted and does not protrude from the housing **30** of the insertion device **1**, the moving part **38** is in a start position in the right side of the housing **30**;

(ii) a second state (FIG. **1**B), where the penetrating member **50** is in the middle point **22***b*, the part(s) of the penetrating member **50** which are to be inserted, such as the cannula **22** and/or an insertion needle **53**, fully protrude the housing **30** through the opening **101** in the base part **100**, and the moving part **38** has been moved forward to a middle position relative to the housing **30**. The stationary guiding means **33** of the penetrating member **50** prevent the penetrating member **50** from moving in the same direction as the moving part **38** and only allows a "vertical" movement of the penetrating member **50** i.e. vertical is here to be understood as being perpendicular to "horizontal"; and

(iii) a third position (FIG. **1**C), where the part(s) of the penetrating member **50** to be inserted still protrude the housing **30**, but the transformation means **51** together with the holding means **52** and the insertion needle **53** are at the end point **22***c* and the insertion needle has been retracted from the injection site. The moving part **38** has reached the end of its travel to the left in the stationary housing. In the second position (ii) and in the

third position (iii), the body **24** of the penetrating member **50** is retained through interaction between the retention means **23** of the body **24** of the penetrating member **50** and the interacting means **102** of the base part **100**.

As shown, the horizontally forward movement of the moving part **38** is transformed into an insertion movement of the penetrating member **50** followed by a retraction movement of one or more parts of the penetrating member **50**. This is achieved by the interaction of the guiding means **39** of the moving part **38** with the transformation means **51** of the penetrating member **50**.

In the first position (i), the transformation means **51** of the penetrating member **50** are at the starting point **22***a* of the track/guiding means **39**. When the moving part **38** is moved horizontally guided by its guiding means **32**, the penetrating member **50** is moved downwards, i.e. "vertically" towards the base part **100**. The speed of the movement of the moving part **38** and the slope of the guiding means **39** define the speed of the movement of the penetrating member **50**, thus the speed of insertion i.e. the steeper the slope of the guiding means **39** are, the shorter time will be used to guide the penetrating member **50** from the retracted start position to the inserted position.

In the second position (ii), the transformation means **51** of the penetrating member **50** have reached the middle point **22***b* of the guiding means **39**. At this point the direction of the slope of the guiding means **39** changes from downwards, i.e. towards the base part **100**, to upwards, i.e. away from the base part **100**. Thus the orientation of the slope of the guiding means **39** defines the direction of movement of the penetrating member **50**. Further the forward horizontal movement of the moving part **38** produces a retraction movement of the holding means **52** of the penetrating member **50** and the insertion needle **53**. If the cannula **22** is a hard self penetrating cannula there will be no need of a separate insertion needle **53** and also there will be no need to perform the last retraction part of the movement i.e. the last line of the V in the track **39** could be left out and the middle point **22***b* would be identical to the end point **22***c*.

In the third position (iii), the transformation means **51** of the penetrating member **50** have reached the end point **22***c* of the guiding means **39**, and the holding means **52** of penetrating member **50** and the insertion needle **53** are fully retracted.

As seen in FIG. **1**, the moving part **38** does not protrude the housing **30**. The arrow above the figure indicates the direction of movement of the moving part **38**.

FIG. **2**A-**2**F illustrates attachments means with an automatic release function. The insertion device **1** comprises a housing **30**, a base part **100**, a moving part **38**, an activation part **11**, and a penetrating member **50**. One embodiment of a penetrating member **50** is shown in these figures but a penetrating member **50** similar to the penetrating members described in FIG. **16**-**17** might also be used. For illustrative purposes means the moving part **38** are represented in a semi-transparent fashion.

The housing **30** comprises guiding means **32** for the moving part **38** which allows the moving part **38** to move between at least two positions, guiding means **33** for the penetrating member **50** which allows the penetrating member **50** to move between at least two positions, and guiding means **34** for the activation part **11** which allows the activation part to move between at least two positions. The housing **30** is attached to the base part **100**. According to this embodiment the attachment is releasable. The attachment is provided by parts of the housing **30** comprising a hinge **35** and fastening means **14** interacting with parts of the base part **100**, whereby the housing **30** and the base part **100** are releasably connected. The hinge **35** comprises an at least partly rounded surface of a wall of the housing **30** which can pivot in relation to the base part **100** as it is placed in a groove in the base part **100**. The fastening means **14** of the housing **30** interacts with locking means **108** of the base part **100**.

The letter "b" in FIG. **2**C indicates the height of the housing **30** of the insertion device **1**. The height "b" will expediently be in the range of 5-100 mm, and normally in the range 10-50 mm or more specifically 20-30 mm. The illustrated embodiment is 25 mm. In embodiments where the inserter is not removed after inserted the inserter should be as low as possible and normally not extend further from the patients skin than the delivery part **8**.

The housing **30** also comprises retention means **31**. The retention means **31** hold the moving part **38** in a start position by engaging with locking means **28** on the moving part **38**. According to this embodiment the retention means further provides a stop for the movement of the activation part **11**.

The guiding means **32** for the moving part **38** provides a directional controlled movement of the moving part **38** in relation to the housing **30**. The guiding means **32** are attached to or connected to or an integrated part of the inner surfaces of the housing **30** and will normally have the shape of longitudinal tracks corresponding to surfaces on the moving part **38** in order to make it possible for the moving part **38** to slide along the tracks. In the depicted embodiment, the moving part **38** can move parallel, i.e. horizontal to the base part **100**, guided by the guiding means **32**, the movement will normally be a sliding movement in a direction parallel to the surface of the base part **100**, i.e. the movement is a longitudinal movement or a linear movement.

The guiding means **33** for the penetrating member **50** which are a part of or connected to or integrated with the housing **30** provides that the penetrating member **50** can only be moved in a well defined direction which direction is different from the direction of the moving member **38**. In the embodiment the direction of movement of the penetrating member **50** is essentially perpendicularly to the direction of movement of the moving part **38**. The guiding means **33** for the penetrating member **50** will normally be formed by inner surfaces of the housing **30**, e.g. the guiding means **33** may comprise the inner surfaces of a hollow, cylindrical element wherein the penetrating member **50** can move between at least a forward and a retracted position along the longitudinal axis of said cylindrical element, comparable to the movement of a piston in a cylinder. If the penetrating member **50** has a rectangular cross-section the "cylindrical" element should of course be adapted to fit closely to the cross-section of the actually used penetrating member **50**. Such a movement will be a sliding movement as the continuous contact between the inner surfaces of the cylindrical elements and the outer surfaces of the penetrating member **50** provides the guiding. Alternatively, the guiding means **33** of the penetrating member **50** can comprise one or more bars, governing the direction of movement of the penetrating member **50**. As seen from the figures the guiding means **33** for the penetrating member **50** according to this embodiment can extend from the inner ceiling of the housing to the bottom part **100**. The guiding means **33** of the penetrating member **50** are not attached to the base part **100** but might reach down and touch it or e.g. provide a support for the base part **100**.

The guiding means **34** of the activation part **11** provides a directional controlled movement of the activation part **11** in relation to the housing **30**. The guiding means **34** are attached to or integrated with the housing **30**. In the depicted embodiment, the activation part **11** moves in parallel with, i.e. horizontal to the base part **100**, guided by the guiding means **34** which according to this embodiment is provided as parts of the inner surfaces of the housing. The guiding means **34** might be formed as longitudinal tracks leading the activation part **11** in a well defined direction or simply the inner surfaces of the walls of the housing **30**. Such a movement is normally a sliding movement as the guiding means **34** and the activation means are in continuous contact while moving in relation to each other. The movement will normally be a linear movement. The direction of movement of the activation part **11** is according to this embodiment identical to the direction of movement of the moving part **38** therefore the guiding means **34** of the activation part **11** can be the same as the guiding means **32** of the moving part **38** i.e. on set of guiding means **32**, **34** provides the well defined and at least partly simultaneous movement of the moving part **38** and the activation part **11**.

The moving part **38** is provided with transformation means **39** providing transformation of the movement of the moving part **38**, which according to this embodiment is horizontal, into a movement of the penetrating member **50** in the insertion direction followed by a movement of at least the insertion needle of the penetrating member **50** in a direction of retraction. According to this embodiment the transformation means are in the form of a protruding cylindrical part **51** on the penetrating member **50** corresponding to an open V-shaped track **39** in the moving part **38**. The V-shaped track **39** is sized to fit closely with the protruding part **51** of the penetrating member **50** in order to provide a well defined path of movement.

The moving part **38** comprises a releasing member **29** providing a separation of the housing **30**, or at least a part of the housing **30**, from the base part **100** by releasing the fastening means **14** of the housing from the locking means **108** of the base part **100**. Said release is provided by interaction of the releasing member **29** with a part of the housing **30**, according to this embodiment it is the inner wall of the housing **30** opposite the activation means **11** where the linear movement of the activation means **11** would end if continued to the inner wall of the housing **30**.

The housing comprises an elastic member **36** which upon release of the fastening means **14** of the housing initiates removal of the housing **30** from the base part **100**. According to the embodiment shown in FIG. **2** the elastic member **36** is an integrated part of the housing **30** i.e. it is fastened unreleasably to the housing **30**. The elastic member **36** is a leaf spring unreleasably fastened to the housing **30** at one end and pressed against the base part **100** at the opposite end. The flexibility of the elastic member **36** is defined by the material of which it is constructed and the physical dimensions of the material, according to the present embodiment the elastic member is constructed of the same material as the housing i.e. a hard plastic and normally formed during molding of the housing **30**, but it could also be constructed of a metal which after molding of the housing is fastened unreleasably to the housing **30**.

Insertion of the penetrating member **50** using the insertion device according to the invention **1** is initiated by activation of the activation part **11**. The activation part **11** is activated by pushing the part towards the housing **30**. The activation part **11** comprises interaction means **41**. The interaction means **41** interacts with the retention means **31** of the housing **30**, thereby arresting the forward movement of the activation part **11**. As can be seen in FIG. **2**A, the activation part **11** protrudes the housing **30** in the depicted, non-activated state. The letter "a" indicates the length of protrusion of the activation part **11** with respect to the housing **30**. The protrusion before activation of the activation part **11** will normally be in the range of 1-100 mm, or 5-50 mm, or 10-25 mm, or 15-20 mm. In the shown embodiment the protrusion is 17 mm. In another embodiment of the invention, the activation part **11** does not protrude the housing **30**, or protrudes the housing **30** only marginally.

The insertion device **1** is in a non-activated state before use, such as during transport or storage.

According to this embodiment a spring **45** is provided between the moving part **38** and the activation part **11**. Normally the spring **45** will be in a relaxed state during storing as this will normally prolong the time the product can be stored while still being fully functional, if the spring **45** is in a biased state during storing there is a risk that the performance of the product will rapidly decrease. As illustrated in FIG. **2**A-F the spring **45** can be a spiral spring, comprising two ends: a first end **46**, attached to, or placed in connection with the moving part **38** and a second end **47** attached to, or placed in connection with the activation part **11**. The spring **45** is positioned along the direction of movement for the activation part **11** which is being parallel to the upper surface of the base part **100**.

A function of the spring **45** is to provide energy for the penetration and/or retraction movement of the penetrating member **50** and/or parts of the penetrating member **50**. If this energy is not provided by a spring **45** it has to be directly provided by the user of the device as the user provides a horizontal movement of the activation part **11** by pushing the activation part **11** towards the housing **30** and thereby a horizontal movement of the moving part **38**.

The spring **45** of the illustrated embodiment stores energy from the movement of the actuation of the of the activation part **11** as the spring **45** is biased through this first movement. During actuation of the activation part **11** the moving part **38** is stationary. When the interaction means **41** of the activation part **11** gets into contact with the locking means **28**, the moving part **38** is released from the stationary position and moved in a direction defined by the guiding means **32**. The forward movement of the activation part **11** is stopped at the time where the interaction means **41** touches the retention means **31** of the housing **30**. According to the embodiment of FIG. **2** the direction of the moving part **38** is the same as the forward direction of the activation part **11**. When the moving part **38** pushed by the spring **45** hits the inner surface of the housing **30**, the spring **45** is biased enough to provide energy for the release of the releasable connection between the fastening means **14** of the housing **30** and the locking means **108** of the base part **100**. This is provided by making the wall or at least a part of the wall of the housing **30** so flexible that the wall can be bend outward and release the fastening means **14** from the locking means **108** of the base part **100**. When the locking connection is released the elastic member **36** pushes the housing **30** away from the base part **100** and the user will not need pull the insertion device away from the base part **100**.

FIG. **3** shows a first embodiment of an assembly comprising an inserter according to the invention together with a medication unit **8**. Only the side of the base part **100** can be seen as the whole of the upper surface of the base part **100** is covered by the medication unit **8**. The medication unit **8** will normally comprise both a reservoir for medication such as insulin and delivering parts in the form of pumping means

and e.g. dosing means which can see to that the patient has a prescribed dose of medication.

The FIGS. **4** and **5**A and B show a second embodiment of an assembly comprising an inserter **10** according to the invention, a delivery part **8** and a base part. The base part comprises a surface plate **1** attached to a contact surface. The surface plate **1** is in this embodiment constructed of a molded plastic material and the contact surface is the proximal side of a mounting pad **2** which mounting pad **2** is unreleasably fastened to the surface plate **1** during manufacturing of the device. "Proximal" means the side or surface closest to the patient when the mounting pad is adhered to the patient, "distal" means the end or surface furthest away from the patient when the device is in a position of use.

FIG. **4** shows the embodiment of the assembly seen from the side and FIG. **5** shows the same embodiment seen from above. The penetrating member of this embodiment is comprised in a cannula part **7** which is inserted into an opening **12**A of a connector part **3** of the base part, this cannula opening **12**A provides and opening which extends right through the base part. The cannula part **7** is provided with a penetrating member in the form of a cannula **22** which will penetrate the surface of the skin of the patient during the insertion and be positioned sub- or transcutaneously.

The inserter **10** holds the cannula part **7** before insertion and the insertion is initiated by pushing a handle **11**. FIG. **5** shows the direction the handle **11** has to be pushed in order to initiate insertion of the cannula part **7**. After insertion a not shown insertion needle can be retracted to the inside of the inserter **10**, afterwards the inserter **10** can be removed from the base part, leaving an inserted cannula **22** fastened to the surface plate **1**. If the cannula **22** of the cannula part **7** is a hard self penetrating cannula there will be no separate insertion needle and therefore no need to retract the insertion needle.

The connector part **3** is kept in position by the surface plate **1**. According to one embodiment the surface plate **1** and at least an outer cover of the connector part **3** is simply molded in one piece during manufacturing of the device. The connector part **3** forms a fluid path between e.g. a reservoir **6** of medication or a reservoir for liquid collected from the patient and a cannula part **7**. Therefore the connector part **3** is provided with at least two openings, one opening at each end of the fluid path where the first opening **13** is an inlet or outlet opening receiving or delivering fluid to a reservoir **6** and the second opening **12** is an inlet or outlet opening receiving or delivering fluid to a cannula part **7** (see FIG. **6**C-D). The connection part **3** might be provided with extra openings e.g. for injection of a second medication or nutrient or for letting the fluid in the fluid path get in contact with a sensor. In order to secure a fluid tight connection between the outlet opening **12** in the connection part **3** and the cannula part **7** the outlet opening **12** of the connection part **3** is provided with an elastic sealing **18** around the outlet opening **12**. When the cannula part **7** is inserted it will be press fitted into the cannula opening **12** and the elastic sealing **18** will provide a completely fluid tight gasket around the corresponding openings **12** and **20**. In order to improved the press-fitting and thereby the fluid tight connection between the cannula part **7** and the outlet of the fluid path, the cannula opening **12**A can be provided with a decreasing cross-section in a plane parallel to the cannula **22** when inserted and perpendicular to the surface where the outlet of the fluid path is positioned. The cannula part **7** will have a corresponding decreasing cross-section.

In the following the first opening **13** will be referred to as "inlet" and the second opening **12** will be referred to as "outlet" although the direction of the flow through the fluid path is not significant for the invention.

The connection part **3** is further provided with a cannula opening **12**A which accurately fits around a cannula part **7** i.e. the cannula opening **12**A has the same shape or profile as the cannula part **7** and is just big enough to let the cannula part **7** pass through and then fit into the opening. When the cannula part **7** is fully inserted into the base part and the patient, then the upper surface i.e. the distal surface of the cannula part **7** is normally at level with or at a lower level than the outer surface of the connection part **3** surrounding the cannula opening **12**A. When the cannula part **7** has been fully inserted into the connection part **3**, then an opening **20** in a side surface of the body of the cannula part **7** corresponds to the opening **12** of the fluid path of the connection part **3** and fluid can flow from one part to the other.

FIG. **5**B shows the embodiment of FIG. **5**A where the inserter has been removed. FIG. **5**B shows the device from the end which was covered by the inserter **10** before it was removed. From this end it is possible to see a part of the fastening means **14** which assure attachment of the inserter **10** to the base part before insertion. According to this embodiment the fastening means **14** comprise two openings **14**L and **14**R in the connector part **3**. These openings correspond to two protruding parts **14**PL and **14**PR (see FIGS. **7** and **8**) which protrude from the side of the inserter housing turned towards the base part and the connector part **3** with the corresponding opening. When the fastening means **14**L and **14**R on the base part is engaged with the corresponding fastening means **14**PL and **14**PR on the inserter **10**, the inserter **10** is prevented from moving in relation to the base part, at least in the direction perpendicular to the surface plate **1**. After insertion of the penetrating member where the penetrating member has been fully inserted into the base part, the inserter **10** can be removed or detached from the base part. When detaching the inserter **10** from the base part, the inserter **10** is moved in a direction horizontal to the patients skin i.e. the base part is not subjected to a force perpendicular to the patients skin i.e. a force pulling the base part away from the patient. Alternatively it would be possible to e.g. glue the inserter to the delivery part **8** before insertion along adjoining surfaces between the inserter **10** and the delivery part **8** which surfaces should be essentially perpendicular to the patient's skin in order to create a pull in a direction parallel to the patients skin when the inserter **10** is removed from the delivery part **8**.

FIGS. **6**A-D show the base part and the delivery part in a separated position from different angles. In FIG. **6**A the two parts are shown from below. This view shows an opening **12**B through which the penetrating member **7** can be inserted through the base part and through which opening **12**B the cannula **22** extends. From this view it is possible to see how the reservoir **6** can be positioned in the delivery part **8** and to see how two opposite positioned release handles **9** are placed at the edge of the delivery part **8**. Further a longitudinal track corresponding to longitudinal raised guiding means **4** on the base part can be seen.

The two release handles **9** are formed as s-shaped bands where one end is fastened hinge-like to the housing of the delivery part **8** and the first curve in the s-shape is slightly extending the outer surface of the housing of the delivery part whereas the second curve is free i.e. not attached to the housing of the delivery part **8** and is provided with a hook-like shape which can fold around a part **15** protruding from the distal surface of the base part. When the delivery part is locked to the base part both release handles **9** are

folded round a protruding part **15**, when the delivery part **8** is to be removed from the base part, the two opposite release handles **9** are pushed together whereby the hook-like parts of the release handles **9** are released from the protruding parts **15** of the base part, and the delivery part can be moved backwards i.e. in the direction away from the cannula part **7** and removed from the base part in this direction.

In FIG. **6**B the two parts are shown from above. This view shows how the delivery part **8** of this embodiment can be joined to the base part by pushing the delivery part **8** down toward the guiding means **4** which in this case is a longitudinal raised platform having e.g. a metal lining **5** fastened to the top surface. The delivery part **8** is provided with corresponding means e.g. comprising a track corresponding to the raised platform **4**. The corresponding means of the delivery part **8** can slide along the metal lining **5** of the raised platform **4** in the longitudinal direction. When the delivery part **8** arrives at its working position, the two release handles **9** engage respectively with the two protruding parts **15** protruding from the upper surface of the surface plate **1**. When the delivery part **8** is in its working position it is locked in all horizontal directions by the release handles **9**. The locking mechanisms make it possible to fasten and release the delivery device from the base part as often as needed i.e. a single-use base part can be combined with a multi-use delivery part.

In FIG. **6**C the two parts are shown from the end opposite of where the inserter was fastened before insertion of the penetrating member. From this side it is possible to see the inlet opening **13** in the connection part **3** through which e.g. medication from the reservoir **6** can enter, the inlet opening **13** is protected with a membrane to prevent contamination with microorganisms. According to one embodiment the connection part **3** is provided with both a connector needle (not shown as it is placed behind the bubble shaped membrane) and a bubble shaped self closing membrane **17** and the reservoir **6** can be provided with a bubble shaped self closing membrane. Hereby a fluid path is established providing transfer of medication e.g. insulin or nutrients from the reservoir to the connector part **3**. As both parts are provided with self closing membranes it will be possible to separate the two units from each other and rejoin them at a later time without the connection part **3** and thereby the patient being contaminated.

FIG. **7** shows a longitudinal cut through an assembly as shown in FIG. **4**-**6**. From this view it is possible to the how the fastening means **14** of respectively the connector part **3** of the base part and the inserter **10** are joined together.

FIG. **8** shows the inserter **10** removed from the rest of the assembly. From this side it is possible to see the fastening means **14**PR and **14**PL of the inserter.

FIGS. **9**-**11** show a third embodiment of an inserter, in FIGS. **9** and **10** the inserter is shown separated from the rest of the assembly. The inserter **10** comprises like the first and second embodiment of the inserter an actuator handle **11** which in FIG. **9** is shown in a pre-insertion state and in FIG. **10** is shown in an after-insertion state. The third embodiment of the inserter is provided with a moving part **38** as shown in FIG. **12** and this moving part is provided with a protruding member **38**A which is an integrated part of the moving part **38**. The moving part **38** is shown two different views in FIGS. **12**A and **12**B. That it is "an integrated part" means that it moves simultaneously with the moving part and is positioned stationary in relation to the moving part. Normally it will be molded together with the moving part and be of the same material, but it can also be made of a different material and attached to the moving part **38** after the moving part **38** has been produced.

The protruding part **38**A on the moving part **38** is provided with a ramp. The ramp is an inclined surface placed on the forward side of the protruding part **38**A in such a way that the front profile of the protruding part **38**A forms an arrowhead.

The fastening means of this embodiment comprises a hinged part **14** which in this embodiment is fastened to the housing of the inserter **10**, the hinged part could alternatively be fastened to an internal part of the inserter e.g. the same part as the protruding parts **14**PL and **14**PR is fastened to. In the shown embodiment the hinged part **14** is actually made as a part of the housing as the hinged part **14** is created by making two cuts in the full height of the housing. The housing is normally made of a hard, molded plastic such as polypropylene and the relatively long shape of the hinged part **14** makes it very flexible i.e. the hinged part **14** is very pliant and it will be easy to push it outward from the relaxed position, the inward movement is blocked by the presence of the guiding means **33** for the penetrating member which in this embodiment is a cannula part **7**. The hinged part **14** can also be made of a material which is different from the material of the housing of the inserter e.g. metal which are then attached to the housing in a rotatable manner.

The hinged part **14** is provided with two inward hooks ("inward" means that the hooks point toward the inside of the housing) at the lower or proximal end of the hinged part **14** and the two hooks lock the housing to the base part by catching a stationary protruding part **14**B of the base part. As the two hooks are turned inward they are released from their locked position by being pushed outward i.e.

away from the centre of the housing. The hinged part **14** is also provided with a contact member **14**A having the form of a rounded plate of a rigid material placed inwards from the hinged part **14** around the guiding means **33** for the cannula part **7**. When the moving part **38** moves from its start position to its end position the protruding member **38**A which is placed on the trailing edge of the moving part **38** will hit the contact member **14**A with the ramp surface and the contact member **14**A will be forced outward and so will the hinged part **14** as the contact member **14**A is attached unreleasably and rigidly to the hinged part **14**.

The housing of the inserter also comprises two protruding parts having the form of rounded hooks **14**PL and **14**PR on the inside surface of the wall opposite the inward hooks of the hinged part **14**. These protruding parts **14**PL and **14**PR fits into corresponding openings **14**L and **14**R of the base part close to the connector part **3**. The openings in the base part are shown in FIG. **16**A. When the fastening means in the form of the openings **14**L and **14**R on the base part is engaged with the corresponding fastening means in the form of the rounded hooks **14**PL and **14**PR on the inserter **10**, the inserter **10** is prevented from moving in relation to the base part, both in the direction parallel to the longitudinal direction of the base part as the protruding parts are rounded and form a grip around the opening, and also in the direction perpendicular to the surface plate **1** due to the insertion of the protruding part into the opening. After having fully inserted the penetrating member (FIG. **10**), the inserter **10** can be removed or detached from the base part.

In order to detach the inserter **10** from the base part, the inserter **10** is pivoted around an axis provided along the upper surface of the openings **14**L and **14**R. The upper (distal) surface of the openings **14**L and **14**R provide a contact surface for the rounded hooks **14**PL and **14**PR along

which contact surface the downward contact surface of the rounded hooks **14**PL and **14**PR can slide and thereby be forced out of the openings **14**L and **14**R when subjecting the inserter housing **30** to a rotational movement. After insertion the base part comprising the surface plate **1** and the inserted part **7** is completely stationary in relation to the surface in which the cannula or sensor has been inserted and the rotational movement is only provided by the inserter **10**.

The rotatable movement is made possible at the lower or proximal surface of the housing of the inserter is inclined in relation to the upper surface **1** of the base part and therefore leaves room for the displacement of the housing **30**, at the end of the rotational movement the lower (proximal), inclined surface of the inserter housing will normally rest against the patients skin.

FIG. **11**A shows the inserter in a position before insertion. In this state the inclined lower surface is lifted away from the patient's skin. The inward hooks of the hinged part **14** are locked around the protruding part **11** B on the base part.

FIG. **11**B shows the inserter after the cannula part has been inserted. In this state the inclined lower surface is parallel to the patient's skin and the inward hooks of the hinged part **14** have been released from the locked position.

FIG. **11**C shows the inserter after it has been removed from the base part.

FIGS. **12**A and **12**B show the moving part **38** of the third embodiment of the inserter shown in FIG. **9-11**. FIG. **12**A shows the "back side" i.e. the side turned away from the penetrating member and FIG. **12**B shows the "front side" i.e. the side turned toward the penetrating member. The figures show the protruding part **38**A placed at the trailing edge of the moving part **38** having the inclined side i.e. the ramp facing forward in the direction of movement, and the figures show the transformation means **39** in the shape of a longitudinal opening formed as a V where the start position is at the upper end of the first line in the V and the end position for the penetrating member is at the upper end of the second line in the V.

FIGS. **13** and **14** show a fourth embodiment of an inserter, this embodiment differs from the third embodiment by the fastening means **14** securing the inserter to the base part. The inserter **10** is in FIGS. **13** and **14** shown in an after-insertion state where it has been removed from the base part. The fourth embodiment has means to release to sets of functionally independent fastening means which are supporting each other.

Like the third embodiment the fourth embodiment of the inserter is provided with a moving part **38** (see FIGS. **15**A and **15**B) having a protruding member **38**A being an integrated part of the moving part **38**. The moving part **38** of the fourth embodiment is further provided with a second integrated part called the positioning means **27**. These positioning means **27** are attached to the lower trailing edge of the moving part **38**.

The fastening means of this embodiment comprises like the third embodiment of the inserter a hinged part **14** which is fastened to the housing of the inserter **10** and the hinged part **14** moves in the same way as described for the third embodiment of FIGS. **9** and **10**. The hinged part **14** of the fourth embodiment is also provided with two inward hooks at the lower or proximal end of the hinged part **14**. The two hooks lock the housing against the base part by catching a stationary protruding part **14**B of the base part having a downward or proximal contact surface. As the two hooks are turned inward they are released by being pushed outward i.e. away from the inside of the housing.

The hinged part **14** is also provided with a contact member **14**A having the form of a plate placed in a direction toward the centre of the inserter i.e. "inwards" from the hinged part **14** around the guiding means **33** for the cannula part **7**. When the moving part **38** moves from its start position to its end position the protruding member **38**A which is placed on the trailing edge of the moving part **38** will hit the contact member **14**A with the ramp surface of the protruding member **38**A and the contact member **14**A will be forced outward and so will the hinged part **14** as the contact member **14**A is attached unreleasably and rigidly to the hinged part **14**.

According to the fourth embodiment the protruding members **14**PL and **14**PR are positioned on a flexible member **114**. The protruding members **14**PL and **14**PR according to this embodiment have a rectangular profile but could also have e.g. a round or triangular profile. The protruding members **14**PL and **14**PR fits into openings **14**P and **14**L of the base part close to the connector part **3**. These openings correspond to the rectangular protruding members **14**PL and **14**PR. When the fastening means in the form of the openings **14**L and **14**R on the base part are engaged with the corresponding fastening means in the form of the protruding members **14**PL and **14**PR on the inserter **10**, the inserter **10** is prevented from moving in relation to the base part, both in the direction perpendicular to the surface plate **1** and in any direction parallel to the surface plate **1**.

The flexible member **114** is attached to the housing or a part being stationary in relation to the housing **30** in such a way that the flexible member can move between two positions, a first position where the inserter is locked to the base part, and a second position where the inserter is released from the base part. Both FIGS. **17**A and **17**B show the flexible member **114** in a relaxed locked position and an arrow in FIG. **17**B indicates the direction it moves in, in order to get to the second released position. According to the shown embodiment the flexible member **114** is made as an integrated part of the guiding means **32** for the moving part i.e. the flexible member **114** constitutes a part of the surfaces or walls along which the moving part **38** slides. The flexible member **114** is provided with a contact part **115** which according to this embodiment has a triangular profile with the sharpened edge pointing forward in the direction of movement during insertion. The contact part **115** is formed with a ramp shaped surface pointing in the direction opposite of the direction of movement of the moving part **38** during insertion.

In order to bring the flexible member **114** from a first relaxed and locked position into a second and released position the flexible has to be subjected to a force large enough to be able to move the flexible member **114** to the second position.

FIGS. **14**A and **14**B shows the internal parts of the inserter housing **30** which provide the guiding parts for the moving part and which are not visible when the surrounding housing is in place. FIGS. **14**A and **14**B show identical cuts through these internal housing parts but in FIG. **14**A the moving part **38** is removed in order to make the contact part **115** of the internal parts visible. The contact part **115** consists of a protruding ramped surface which will get in contact with the positioning means **27** of the moving part **38** when the moving part **38** is in its end or final position.

FIGS. **15**A and **15**B show the moving part **38** of the fourth embodiment of the inserter shown in FIG. **13-14**. FIG. **15**A shows the "back side" i.e. the side turned away from the penetrating member and FIG. **15**B shows the "front side" i.e. the side turned toward the penetrating member. The figures

show the protruding part **38**A placed at the trailing edge of the moving part **38** having the inclined side i.e. the ramp facing forward in the direction of movement, and the figures show the transformation means **39** in the shape of a longitudinal opening formed as a V where the start position is at the upper end of the first line in the V and the end position for the penetrating member is at the upper end of the second line in the V. The end position is placed lower than the start position. At the lower edge of the moving part **38** is shown positioning means **27** which assures the positioning of the moving part **38** in relation to the housing of the inserter when sliding along the guiding means **32** provided by the surrounding parts of the inserter housing but which main function is to force the flexible member **114** of the housing "backwards" when the moving part **38** and the integrated positioning means **27** passes by.

When the positioning means **27** of the moving part **38** touch the flexible member **114**, the flexible member **114** is pushed away from the connection part **3** of the base part, and the fastening means in the form of the protruding parts **14**PL and **14**PR are pulled out of the corresponding openings in the base part **14**L and **14**R. When the moving part **38** is in its end position, the integrated parts **38**A and **27** will be at positions where both the hinge part **14** and the flexible member are pushed away from their relaxed and locked position which means it will be possible to remove the inserter from the base part when the moving part **38** is in its end position.

FIG. **16** shows an enlargement of a cannula part **7** used with the embodiments of FIG. **1**-**2**. This embodiment comprises a body **24** provided with a cannula **22** and with a protruding front **25** having a flat surface provided with an opening **20**. The protruding front **25** of the cannula part **7** need not be flat; it can actually have any desired shape as long as it is possible to create a corresponding surface on the connection part **3** facing the cannula part **7**. In one embodiment the front **25** is inclined in such a way that the cross-section at the upper i.e. distal end of the cannula part **7** is larger than the cross-section at the proximal end of the front, i.e. the end closest to the patient after insertion. The opening **20** of the protruding front **25** is an inlet or outlet through which liquid can enter or exit the cannula part **7**. The body **24** is further provided with a top opening **21** which can be covered with a self closing membrane. The opening **21** need some kind of entrance protection as it is facing an outer surface which is in contact with the surroundings. The top opening **21** is primarily used when inserting the cannula part **7** if the cannula **22** is a soft cannula. That the cannula **22** is soft means that it is made of a relatively soft material which can not by it self penetrate the patients skin, in this case it is necessary to use a pointy insertion needle of a relatively hard material when inserting the cannula and this pointy needle can be inserted through the top opening **21**, pass through an inner hollow in the body **24** of the cannula part and further pass through the full length of the cannula **22** in such a way that the pointy end of the insertion needle stick out of the open end of the hollow cannula **22**. After insertion i.e. after the cannula **22** has been placed sub- or transcutaneous in the patient, then the insertion needle is retracted and the cannula **22** is left inside the patient. The cannula part **7** is also provided with fastening means **23** which in this embodiment has the form of a series of outward hooks **23** which are flexibly fastened to the body **24** in such a way that the hooks can pivot inwards toward the centre of the cannula part **7**. When the cannula part **7** is pressed toward the base part, the hooks **23** passes an edge which pushes them toward the centre as they passes the edge and when the hooks have passed the edge they return to their original position and as a upward surface of one or more of the hooks touch a downward surface of the edge the cannula part **7** is locked unreleasably against the edge.

FIG. **17** shows an enlargement of a second embodiment a cannula part **7**. This embodiment also comprises a body **24** provided with a cannula **22** and with a protruding front **25** having a flat surface provided with an opening **20** but according to this embodiment the protruding front **25** is inclined in order to reduce the force required to insert the cannula part and in order to reduce distortion of the sealing **18**. The inclination of the front **25** is defined by the angle d between the centre line c of the cannula **22** and a line parallel to the surface around the opening **20**. The angle d will be larger than 0° and smaller than 90°, normally d ϵ]0°, 30°] depending on the diameter of the sealing **18** or [60°, 90°[. The distance d_1 between at the distal end of the surface of the protruding part **25**, i.e. the end of the cannula part **7** which is furthest away from the patient after insertion, and the centre c of the cannula part **7** is larger than the distance d_2 between the surface of the protruding part **25** at the proximal end, i.e. the end closest to the patient after insertion, and the centre c of the cannula part **7**. Normally the distance d_2 will be so small that the proximal end of the protruding front **25** does not touch the sealing **18** of the connection part **3** during insertion.

In one embodiment (not shown) the angle d is close to 90° i.e. d=90°, such an embodiment would in a drawing corresponding to FIG. **11** appear to have an upward opening **12** of the connection part **3** fitting to a downward opening **20** of the cannula part **7**. This means that the force pushing the cannula part **7** toward the sealing **18** will be close to perpendicular to the contact surface of the sealing **18** and this will prevent that the sealing is distorted during insertion of the cannula part **7** by the cannula part **7** sliding along the sealing **18**. In another embodiment (shown in FIG. **16**) d=0° as the protruding front **25** and the centre line c are parallel. According to this embodiment the cannula part **7** will be in sliding contact with the protruding sealing **18** which can cause the sealing to be distorted.

As according to the embodiment of FIG. **16** the protruding front **25** of the cannula part **7** need not be flat; it can actually have any desired shape as long as it is possible to create a corresponding surface on the connection part **3** facing the cannula part **7**. Also the opening **20** of the protruding front **25** can be an inlet or an outlet depending on the purpose of the cannula part **7**. In FIG. **17** which is a cut-through view it is shown how the top opening **21** of the body **24** is covered with a self closing membrane **21**A. As according to the embodiment of FIG. **10** the top opening **21** is primarily used when inserting the cannula part **7** if the cannula **22** is a soft cannula but the top opening **21** can also be used to inject medication or nutrients other than the primary medication which could be e.g. insulin which the patient receive via the opening **20**.

This embodiment of the cannula part **7** is also provided with fastening means **23** and in this embodiment the fastening means **23** has the form of a protruding part **23** on the cannula part **7** which corresponds to a flexible part **23**A on the stationary base part. The flexible part **23**A can be pushed outward as indicated with an arrow at FIG. **17** when the protruding part **23** on the cannula part **7** passes during insertion of the cannula part **7**. After insertion the upward surface of the protruding part **23** of the cannula part **7** will be locked by the downward surface of the flexible part **23**A of the base part and it will not be possible to detach the cannula part **7** from the base part.

FIG. **18***a* shows another embodiment of the moving part **38** which moving part has an increased tolerance for deviations from the standard insertion depth. FIG. **18***a* shows the "back side" i.e. the side turned away from the penetrating member and when placed in an inserter the moving part would moved from the right to the left while the penetrating member of the inserter stays in a stationary horizontal position in which position it moves first down and then up. The figure shows the protruding part **38**A placed at the trailing edge of the moving part **38**, and the guiding means **39** for the transformation means placed within the boundaries of the moving part. According to this embodiment the guiding means **39** are defined by a cut-out having an outer limit encircling an open space in which the transformation means **51** of the penetrating member can move. The guiding means **39** also comprise a pivotable part **39**A which part can pivot around a stem through which is fastened to the body of the movable part **38**. The pivotable part **39**A provides a flexible upper limit as the movable part **38** moves from the right to the left according to FIG. **18***a* i.e. the pivotable parts **39**A swings upwards as the transformation means passes. When the pivotable part **39**A has passed the transformation means **51** of the penetrating member it swings back into its resting position.

The transformation means **51** has a start position relative to the movable part **38** at position A. As the movable part **38** moves to the left, the transformation means **51** of the penetrating member arrive at position B by sliding along the upper surface of the guiding means **39**, at position B the insertion needle **53** of the penetrating member touches the skin of the patient.

At position C the cannula **22** which is joined to or surrounding the insertion needle **53** touches the skin of the patient.

At position D the sealing start i.e. contact is made between the cannula part **7** and the surface plate **1**, and a retention click can be heard as an information to the user that the cannula **22** is in its correct position and that the retention means **23** on the stationary base part has locked the cannula part **7** to the base part.

As the transformation means **51** of the penetrating member passes from position A to position D it slides along the lower contact surface of the pivotable part **39**A. This contact surface drives the penetrating member down and it is therefore important that the surface is smooth and provides as little frictional resistance as possible.

At position E the penetrating member should be fully inserted. That the pivotable part **39**A can flex allows for the insertion depth to vary slightly i.e. within the range of ±0.5 mm.

At position G the insertion needle **53** is clear of the self closing membrane **21**A which might cover the top opening **21** of the cannula part **7** and at position H the insertion needle is in a safe position i.e. the insertion needle **53** is retracted relative to the housing of the inserter. Normally it will be retracted at least 1 mm relative to the housing.

As the transformation means **51** of the penetrating member passes from position E to position H it slides along the upward contact surface of the trail which forms the guiding means **39** of the moving part **38**. This contact surface drives the penetrating member back up and it should be smooth and provide as little frictional resistance as possible.

FIG. **18***b* shows a view of the moving part **38** seen from the side. The arrows marked A indicate the side shown in FIG. **18***a*.

FIGS. **19**A, B and C show an embodiment of a flat spring which can be used to drive the moving part forward in any of the illustrated embodiments of the inserter. According to this embodiment a spring **45** is provided between the moving part **38** and the activation part **11**. Normally the spring **45** will be in a relaxed state during storing as this will normally prolong the time the product can be stored while still being fully functional, if the spring **45** is in a biased state during storing there is a risk that the performance of the product will rapidly decrease. In this embodiment the spring **45** is a flat spring e.g. made of plastic material comprising two ends: a first end **46**, attached to, or placed in connection with the moving part **38** and a second end **47** attached to, or placed in connection with the activation part **11**. The second end of the spring **45** rests on a block **47***a*.

The spring **45** of the illustrated embodiment stores energy from the actuation of the of the activation part **11** as the spring **45** is biased through this first movement. A characteristic feature of a flat spring is that when the spring is biased it is bending describing a curve, the presence of the block **47***a* and the form of the block i.e. the length of the block **47***a* ensures that the spring **45** can only bend in one direction when it is biased. The not shown housing of the inserter comprises retention means **31**. The retention means **31** can have the form of a pivoting arm holding the moving part **38** in a start position by engaging with locking means **28** on the moving part **38**. The locking means **28** according to the embodiment illustrated in FIGS. **19**A-C has the form of protruding part with e.g. a triangular or round profile.

The deformation of the spring **45** due to biasing can be used to release the moving part **38** from the locked start position.

FIG. **19**A shows the embodiment in a start position. The spring is relaxed i.e. unbiased and the retention means **31** of the housing is in a locking position. In order to begin insertion it is necessary for the user o push the actuator **11**, by doing this the spring will become biased. During actuation of the activation part **11** the moving part **38** is stationary.

FIG. **19**B shows the embodiment in a loaded position. The spring **45** is fully biased and in this fully biased state the spring **45** is curved to such a degree that it touches the retention means **31** of the housing and pushes them away from the locking means **28** of the moving part **38** thereby releasing the moving part **38** from the housing.

FIG. **19**C shows the embodiment in a state where the moving part **38** has been moved to its end position. The actuator handle **11** is in the same position as in the fully loaded state of FIG. **19**B and the retention means **31** of the housing is in an unlocking position. In this state the penetrating member which was to be inserted will be inserted subcutaneously and the next step for the user will be to remove the inserter housing from the insertion site.

The invention claimed is:

1. An insertion device comprising

a penetrating member comprising an insertion needle connected to transformation member, the penetrating member before and during insertion is attached to a body holding a cannula or sensor at a surface of insertion after insertion has taken place,

a moving part comprising a first guide member, the first guide member is configured to restrict the movement of the transformation member and guide the penetrating member from a first to a second position in a first direction, the first direction is linear and towards an injection site, and

a stationary housing comprising a second guide member configured to restrict the movement of the moving part, the second guide member of the housing is configured to guide the moving part in a second direction which is

linear and substantially parallel to a surface on which the stationary housing is mounted during insertion,

wherein the insertion device further comprises a well-defined tube that restricts the movement of the penetrating member to a linear movement in the first direction, and wherein the transformation member of the penetrating member is movable in or along the well-defined tube.

2. An insertion device according to claim **1**, wherein the housing comprises a retention member retaining the moving part in a start position, the moving part comprises a locking member interacting with the retention member in the start position and an activation part comprises a protrusion interacting with the locking member upon activation.

3. An insertion device according to claim **2**, wherein a base part is fastened to a mounting surface and the insertion device comprises a fastener adapted to fasten the insertion device to the base part before insertion and to release the insertion device to the base part upon insertion of the cannula.

4. An insertion device according to claim **3**, wherein the fastener comprises:

fastening members releasably locking the housing of the insertion device to the base part, and

release members releasing the housing from the base part after insertion of the penetrating member.

5. An insertion device according to claim **4**, wherein the fastening members are flexibly connected to the stationary housing.

6. An insertion device according to claim **5**, wherein the moving part is provided with one or more protruding parts that contact with the flexibly connected fastening members and through this contact release the insertion device from the base part.

7. An insertion device according to claim **4**, wherein the release members comprise an elastic member in a biased or distorted state which upon release of the fastening member pushes the housing of the insertion device away from the base part.

8. An insertion device according to claim **2**, wherein the locking member comprises a hook provided with an inclined surface pointing in a direction opposite to the forward movement of the activation part and the retention member of the housing comprises a part protruding from the housing and is adapted to interact with the hook.

9. An insertion device according to claim **2**, wherein the forward movement of the activation part is stopped through contact between the protrusion of the activation part and the retention member for the moving part.

10. An insertion device according to claim **1**, wherein the insertion device before insertion of the penetrating member is attached to a base part, the base part can be fastened to the surface where the penetrating member is to be inserted and the penetrating member is brought in contact with or passes through the base part upon insertion.

11. An insertion device according to claim **10**, wherein the penetrating member is attached to the body holding the cannula, the body comprising a retention member securing the body and the cannula at the surface of insertion, the retention member interacts with a connector on the base part upon insertion and retains the body of the penetrating member to the base part.

12. An insertion device according to claim **1**, wherein the first guide member of the moving part comprises a groove in which the transformation member of the penetrating member can slide.

13. An insertion device according to claims **12**, wherein the groove is substantially V-or U-shaped defining a starting point, a middle point and an end point for at least a portion of the penetrating member.

14. An insertion device according to claim **1**, wherein the insertion device comprises means to perform the following operations upon actuation of an activation part:

loading of a spring;

movement of the moving part from a start position to a stop position; and

transformation of said movement of the moving part to an insertion movement of the penetrating member, followed by a retraction movement of a holding means of the penetrating member.

15. An insertion device according to claim **14**, further comprising a release member adapted to release the housing from a base part upon insertion of the penetrating member.

16. An insertion device according to claim **1**, where the first direction form an angle β to the surface in which the penetrating member is to be inserted, and where $30° < \beta < 90°$.

17. An insertion device according to claim **1**, wherein an energy storing member provides the energy required for moving the moving part from a start position to a stop position.

18. An insertion device according to claim **1** , wherein the distance from the surface in which the penetrating member is inserted, is obtained by constructing the insertion device comprising an inclining proximal surface.

* * * * *