US006175752B1

(12) **United States Patent**
Say et al.

(10) **Patent No.: US 6,175,752 B1**
(45) **Date of Patent: Jan. 16, 2001**

(54) **ANALYTE MONITORING DEVICE AND METHODS OF USE**

(75) Inventors: **James Say**, Alameda; **Michael F. Tomasco**, Cupertino, both of CA (US); **Adam Heller**, Austin, TX (US); **Yoram Gal**, Kibbutz Yagur (IL); **Behrad Aria**, Alameda, CA (US); **Ephraim Heller**, Oakland, CA (US); **Phillip John Plante**, Sunnyvale, CA (US); **Mark S. Vreeke**, Alameda, CA (US); **Keith A. Friedman**, Austin, TX (US); **Fredric C. Colman**, Berkeley, CA (US)

(73) Assignee: **Therasense, Inc.**, Alameda, CA (US)

(*) Notice: Under 35 U.S.C. 154(b), the term of this patent shall be extended for 0 days.

(21) Appl. No.: **09/070,677**

(22) Filed: **Apr. 30, 1998**

(51) **Int. Cl.**[7] **A61B 5/05**

(52) **U.S. Cl.** **600/345**; 600/365; 128/903

(58) **Field of Search** 600/300–301, 600/346, 306–309, 345–365, 372, 385–390; 604/174–180; 128/897–898, 903, 904, 920

(56) **References Cited**

U.S. PATENT DOCUMENTS

Re. 32,947	6/1989	Dormer et al. .
3,260,656	7/1966	Ross, Jr. .
3,653,841	4/1972	Klein .
3,719,564	3/1973	Lilly, Jr. et al. .
3,776,832	12/1973	Oswin et al. .
3,837,339	9/1974	Aisenberg et al. .
3,926,760	12/1975	Allen et al. .
3,972,320	8/1976	Kalman .
3,979,274	9/1976	Newman .
4,008,717	2/1977	Kowarski .
4,016,866	4/1977	Lawton .
4,055,175	10/1977	Clemens et al. .
4,059,406	11/1977	Fleet .
4,076,596	2/1978	Connery et al. .
4,098,574	7/1978	Dappen .
4,100,048	7/1978	Pompei et al. .

(List continued on next page.)

FOREIGN PATENT DOCUMENTS

227 029 A3	9/1985	(DD) .
29 03 216	8/1979	(DE) .

(List continued on next page.)

OTHER PUBLICATIONS

Abruna, H. D. et al., "Rectifying Interfaces Using Two–Layer, Films of Electrochemically Polymerized Vinylpyridine and Vinylbipyridine Complexes of Ruthenium and Iron on Electrodes," *J. Am. Chem. Soc.*, 103(1):1–5 (Jan. 14, 1981).

(List continued on next page.)

Primary Examiner—Cary O'Connor
Assistant Examiner—Michael Astorino
(74) *Attorney, Agent, or Firm*—Merchant & Gould P.C.

(57) **ABSTRACT**

An analyte monitor includes a sensor, a sensor control unit, and a display unit. The sensor has, for example, a substrate, a recessed channel formed in the substrate, and conductive material disposed in the recessed channel to form a working electrode. The sensor control unit typically has a housing adapted for placement on skin and is adapted to receive a portion of an electrochemical sensor. The sensor control unit also includes two or more conductive contacts disposed on the housing and configured for coupling to two or more contact pads on the sensor. A transmitter is disposed in the housing and coupled to the plurality of conductive contacts for transmitting data obtained using the sensor. The display unit has a receiver for receiving data transmitted by the transmitter of the sensor control unit and a display coupled to the receiver for displaying an indication of a level of an analyte. The analyte monitor may also be part of a drug delivery system to alter the level of the analyte based on the data obtained using the sensor.

94 Claims, 26 Drawing Sheets

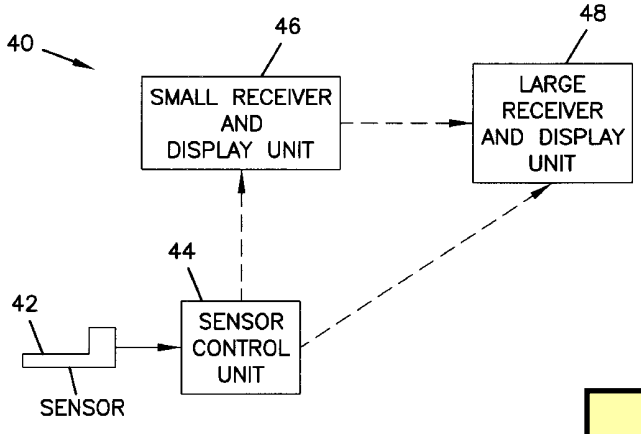

DEXCOM
EXHIBIT 1112

U.S. PATENT DOCUMENTS

4,151,845	5/1979	Clemens .
4,168,205	9/1979	Danninger et al. .
4,172,770	10/1979	Semersky et al. .
4,178,916	12/1979	McNamara .
4,206,755	6/1980	Klein .
4,224,125	9/1980	Nakamura et al. .
4,240,438	12/1980	Updike et al. .
4,247,297	1/1981	Berti et al. .
4,340,458	7/1982	Lerner et al. .
4,352,960	10/1982	Dormer et al. .
4,356,074	10/1982	Johnson .
4,365,637	12/1982	Johnson .
4,366,033	12/1982	Richter et al. .
4,375,399	3/1983	Havas et al. .
4,384,586	5/1983	Christiansen .
4,390,621	6/1983	Bauer .
4,401,122	8/1983	Clark, Jr. .
4,404,066	9/1983	Johnson .
4,418,148	11/1983	Oberhardt .
4,427,770	1/1984	Chen et al. .
4,431,004	2/1984	Bessman et al. .
4,436,094	3/1984	Cerami .
4,440,175	4/1984	Wilkins .
4,450,842	5/1984	Zick et al. .
4,458,686	7/1984	Clark, Jr. .
4,461,691	7/1984	Frank .
4,469,110	9/1984	Slarna .
4,477,314	10/1984	Richter et al. .
4,484,987	11/1984	Gough .
4,522,690	6/1985	Venkatsetty .
4,524,114	6/1985	Samuels et al. .
4,526,661	7/1985	Steckhan et al. .
4,534,356	8/1985	Papadakis .
4,538,616	9/1985	Rogoff .
4,543,955	10/1985	Schroeppel .
4,545,382	10/1985	Higgins et al. .
4,552,840	11/1985	Riffer .
4,560,534	12/1985	Kung et al. .
4,571,292	2/1986	Liu et al. .
4,573,994	3/1986	Fischell et al. .
4,581,336	4/1986	Malloy et al. .
4,595,011	6/1986	Phillips .
4,619,754	10/1986	Niki et al. .
4,627,445	12/1986	Garcia et al. .
4,627,908	12/1986	Miller .
4,633,878	1/1987	Bombardieri .
4,637,403	1/1987	Garcia et al. .
4,650,547	3/1987	Gough .
4,654,197	3/1987	Lilja et al. .
4,655,880	4/1987	Liu .
4,655,885	4/1987	Hill et al. .
4,671,288	6/1987	Gough .
4,679,562	7/1987	Luksha .
4,680,268	7/1987	Clark, Jr. .
4,682,602	7/1987	Prohaska .
4,684,537	8/1987	Graetzel et al. .
4,685,463	8/1987	Williams .
4,703,756	11/1987	Gough et al. .
4,711,245	12/1987	Higgins et al. .
4,717,673	1/1988	Wrighton et al. .
4,721,601	1/1988	Wrighton et al. .
4,721,677	1/1988	Clark, Jr. .
4,726,378	2/1988	Kaplan .
4,726,716	2/1988	McGuire .
4,757,022	7/1988	Shults et al. .
4,758,323	7/1988	Davis et al. .
4,759,371	7/1988	Franetzki .
4,759,828	7/1988	Young et al. .
4,764,416	8/1988	Ueyama et al. .
4,776,944	10/1988	Janata et al. .
4,781,798	11/1988	Gough .
4,784,736	11/1988	Lonsdale et al. .
4,795,707	1/1989	Niiyama et al. .
4,796,634	1/1989	Huntsman et al. .
4,805,624	2/1989	Yao et al. .
4,813,424	3/1989	Wilkins .
4,815,469	3/1989	Cohen et al. .
4,820,399	4/1989	Senda et al. .
4,822,337	4/1989	Newhouse et al. .
4,830,959	5/1989	McNeil et al. .
4,832,797	5/1989	Vadgama et al. .
4,840,893	6/1989	Hill et al. .
4,848,351	7/1989	Finch .
4,871,351	10/1989	Feingold .
4,871,440	10/1989	Nagata et al. .
4,874,500	10/1989	Madou et al. .
4,890,620	1/1990	Gough .
4,894,137	1/1990	Takizawa et al. .
4,897,162	1/1990	Lewandowski et al. .
4,897,173	1/1990	Nankai et al. .
4,909,908	3/1990	Ross et al. .
4,911,794	3/1990	Parce et al. .
4,917,800	4/1990	Lonsdale et al. .
4,919,141	4/1990	Zier et al. .
4,919,767	4/1990	Vadgama et al. .
4,923,586	5/1990	Katayama et al. .
4,927,516	5/1990	Yamaguchi et al. .
4,934,369	6/1990	Maxwell .
4,935,105	6/1990	Churchouse .
4,935,345	6/1990	Guilbeau et al. .
4,938,860	7/1990	Wogoman .
4,944,299	7/1990	Silvian .
4,950,378	8/1990	Nagara .
4,953,552 *	9/1990	DeMarzo 600/300
4,954,129	9/1990	Giuliani et al. .
4,969,468	11/1990	Byers et al. .
4,970,145	11/1990	Bennetto et al. .
4,974,929	12/1990	Curry .
4,986,271	1/1991	Wilkins .
4,994,167	2/1991	Shults et al. .
5,001,054	3/1991	Wagner .
5,050,612	9/1991	Matsumura .
5,058,592	10/1991	Whisler .
5,070,535	12/1991	Hochmair et al. .
5,082,550	1/1992	Rishpon et al. .
5,082,786	1/1992	Nakamoto .
5,089,112	2/1992	Skotheim et al. .
5,095,904	3/1992	Seligman et al. .
5,101,814	4/1992	Palti .
5,108,564	4/1992	Szuminsky et al. .
5,109,850	5/1992	Blanco et al. .
5,120,420	6/1992	Nankai et al. .
5,126,034	6/1992	Carter et al. .
5,133,856	7/1992	Yamaguchi et al. .
5,135,003	8/1992	Souma .
5,141,868	8/1992	Shanks et al. .
5,161,532	11/1992	Joseph .
5,165,407	11/1992	Wilson et al. .
5,174,291	12/1992	Schoonen et al. .
5,190,041	3/1993	Palti .
5,192,416	3/1993	Wang et al. .
5,198,367	3/1993	Aizawa et al. .
5,202,261	4/1993	Musho et al. .
5,205,920	4/1993	Oyama et al. .
5,208,154	5/1993	Weaver et al. .
5,209,229	5/1993	Gilli .
5,217,595	6/1993	Smith et al. .
5,229,282	7/1993	Yoshioka et al. .
5,250,439	10/1993	Musho et al. .
5,262,035	11/1993	Gregg et al. .
5,262,305	11/1993	Heller et al. .

5,264,103		11/1993	Yoshioka et al. .	
5,264,104		11/1993	Gregg et al. .	
5,264,106		11/1993	McAleer et al. .	
5,271,815		12/1993	Wong .	
5,279,294		1/1994	Anderson et al. .	
5,286,362		2/1994	Hoenes et al. .	
5,286,364		2/1994	Yacynych et al. .	
5,288,636		2/1994	Pollmann et al. .	
5,293,546		3/1994	Tadros et al. .	
5,320,098		6/1994	Davidson .	
5,320,725		6/1994	Gregg et al. .	
5,322,063	*	6/1994	Allen et al.	600/372
5,337,747		8/1994	Neftel .	
5,352,348		10/1994	Young et al. .	
5,356,348		10/1994	Young et al. .	
5,356,786		10/1994	Heller et al. .	
5,368,028		11/1994	Palti .	
5,372,133		12/1994	Hogen Esch .	
5,376,251		12/1994	Kaneko et al. .	
5,378,628		1/1995	Gratzel et al. .	
5,387,327		2/1995	Khan .	
5,390,671		2/1995	Lord et al. .	
5,391,250		2/1995	Cheney, II et al. .	
5,395,504		3/1995	Saurer et al. .	
5,400,782	*	3/1995	Beaubiah	600/309
5,411,647		5/1995	Johnson et al. .	
5,437,999		8/1995	Diebold et al. .	
5,469,846		11/1995	Khan .	
5,491,474	*	2/1996	Suni et al.	128/903
5,494,562		2/1996	Maley et al. .	
5,496,453		3/1996	Uenoyama et al. .	
5,497,772		3/1996	Schulman et al. .	
5,531,878		7/1996	Vadgama et al. .	
5,545,191		8/1996	Mann et al. .	
5,560,357		10/1996	Faupel et al. .	
5,562,713	*	10/1996	Silvian	128/903
5,565,085		10/1996	Ikeda et al. .	
5,567,302		10/1996	Song et al. .	
5,568,806		10/1996	Cheney, II et al. .	
5,569,186		10/1996	Lord et al. .	
5,582,184		12/1996	Erickson et al. .	
5,582,697		12/1996	Ikeda et al. .	
5,582,698		12/1996	Flaherty et al. .	
5,586,553		12/1996	Halili et al. .	
5,589,326		12/1996	Deng et al. .	
5,593,852		1/1997	Heller et al. .	
5,596,150		1/1997	Arndt et al. .	
5,617,851		4/1997	Lipkovker .	
5,628,890		5/1997	Carter et al. .	
5,651,869		7/1997	Yoshioka et al. .	
5,660,163		8/1997	Schulman et al. .	
5,670,031		9/1997	Hintsche et al. .	
5,680,858		10/1997	Hansen et al. .	
5,682,233		10/1997	Brinda .	
5,695,623		12/1997	Michel et al. .	
5,708,247		1/1998	McAleer et al. .	
5,711,297	*	1/1998	Iliff et al.	600/300
5,711,861	*	1/1998	Ward et al.	600/365
5,711,862		1/1998	Sakoda et al. .	
5,741,211		4/1998	Renirie et al. .	
5,771,001	*	6/1998	Cobb	128/903
5,791,344	*	8/1998	Schulman et al.	600/300
5,800,420	*	9/1998	Gross et al.	604/890.1
5,807,375		9/1998	Gross et al. .	
5,820,551	*	10/1998	Hill et al.	600/365
5,820,622	*	10/1998	Gross et al.	604/890.1
5,822,715		10/1998	Worthington et al. .	
5,827,184	*	10/1998	Netherly et al.	600/385
5,840,020		11/1998	Heinonen et al. .	
5,842,983	*	12/1998	Abel et al.	600/372
5,885,211	*	3/1999	Eppstein et al.	600/365
5,954,685	*	9/1999	Tierny	600/386
5,971,922	*	10/1999	Arita et al.	600/365

FOREIGN PATENT DOCUMENTS

3934299	10/1990	(DE) .
0 010 375 A1	4/1980	(EP) .
0 026 995 A1	4/1981	(EP) .
0 048 090 A2	3/1982	(EP) .
0 078 636 A1	5/1983	(EP) .
0 096 228 A1	12/1983	(EP) .
0 125 139 A2	11/1984	(EP) .
0 127 958 A2	12/1984	(EP) .
0 136 362 A1	4/1985	(EP) .
0 170 375 A2	2/1986	(EP) .
0 177 743 A2	4/1986	(EP) .
0 080 304 B1	5/1986	(EP) .
0 184 909 A2	6/1986	(EP) .
0 206 218 A2	12/1986	(EP) .
0 230 472 A1	8/1987	(EP) .
0 241 309 A3	10/1987	(EP) .
0 245 073 A2	11/1987	(EP) .
0 278 647 A2	8/1988	(EP) .
0 359 831 A1	3/1990	(EP) .
0 368 290 A1	10/1990	(EP) .
390 390 A1	10/1990	(EP) .
0 400 918 A1	12/1990	(EP) .
0 453 283 A1	10/1991	(EP) .
0 470 290 A1	2/1992	(EP) .
0 127 958 B2	3/1992	(EP) .
0 255 291 B1	6/1992	(EP) .
1394171	5/1975	(GB) .
1599241	9/1981	(GB) .
2 073 891	10/1981	(GB) .
2 154 003	2/1988	(GB) .
2 204 408	11/1988	(GB) .
2 254 436	10/1992	(GB) .
54-41191	4/1979	(JP) .
55-10581	1/1980	(JP) .
55-10583	1/1980	(JP) .
55-10584	1/1980	(JP) .
55-12406	1/1980	(JP) .
56-163447	12/1981	(JP) .
57-70448	4/1982	(JP) .
60-173457	9/1985	(JP) .
60-173458	9/1985	(JP) .
60-173459	9/1985	(JP) .
61-90050	5/1986	(JP) .
62-85855	4/1987	(JP) .
62-114747	5/1987	(JP) .
63-58149	3/1988	(JP) .
63-128252	5/1988	(JP) .
63-139246	6/1988	(JP) .
63-294799	12/1988	(JP) .
63-317757	12/1988	(JP) .
63-317758	12/1988	(JP) .
1-114746	5/1989	(JP) .
1-114747	5/1989	(JP) .
1-124060	5/1989	(JP) .
1-134244	5/1989	(JP) .
1-156658	6/1989	(JP) .
2-62958	3/1990	(JP) .
2-120655	5/1990	(JP) .
2-287145	11/1990	(JP) .
2-310457	12/1990	(JP) .
3-26956	2/1991	(JP) .
3-28752	2/1991	(JP) .
3-202764	9/1991	(JP) .
5-72171	3/1993	(JP) .
5-196595	8/1993	(JP) .
6-190050	7/1994	(JP) .
7-55757	3/1995	(JP) .

7-72585	3/1995	(JP) .
8-285814	11/1996	(JP) .
8-285815	11/1996	(JP) .
9-21778	1/1997	(JP) .
9-101280	4/1997	(JP) .
9-285459	11/1997	(JP) .
10-170471	6/1998	(JP) .
1281988 A1	1/1987	(SU) .
WO 89/05119	11/1985	(WO) .
WO 89/08713	9/1989	(WO) .
WO 90/05300	5/1990	(WO) .
WO 90/05910	5/1990	(WO) .
WO 91/01680	2/1991	(WO) .
WO 91/04704	4/1991	(WO) .
WO 91/15993	10/1991	(WO) .
WO 92/13271	8/1992	(WO) .
WO 94/20602	9/1994	(WO) .
WO 94/27140	11/1994	(WO) .
WO 96/30431	10/1996	(WO) .
WO 96/35370	11/1996	(WO) .
WO 97/02847	1/1997	(WO) .
WO 97/19344	5/1997	(WO) .
WO 97/42882	11/1997	(WO) .
WO 97/42883	11/1997	(WO) .
WO 97/42886	11/1997	(WO) .
WO 97/42888	11/1997	(WO) .
WO 97/43962	11/1997	(WO) .

OTHER PUBLICATIONS

Albery, W. J. et al., "Amperometric enzyme electrodes. Part II. Conducting salts as electrode materials for the oxidation of glucose oxidase," *J. Electroanal. Chem. Interfacial Electrochem.,* 194(2) (1 page—Abstract only) (1985).

Albery, W. J. et al., "Amperometric Enzyme Electrodes," *Phil. Trans. R Soc. Lond.* B316:107–119 (1987).

Alcock, S. J. et al., "Continuous Analyte Monitoring to Aid Clinical Practice," *IEEE Engineering in Medicine and Biology,* 319–325 (1994).

Anderson, L. B. et al., "Thin–Layer Electrochemistry: Steady–State Methods of Studying Rate Processes," *J. Electroanal. Chem.,* 10:295–395 (1965).

Bartlett, P. N. et al., "Covalent Binding of Electron Relays to Glucose Oxidation," *J. Chem. Soc. Chem. Commun.,* 1603–1604 (1987).

Bartlett, P. N. et al., "Modification of glucose oxidase by tetrathiafulvalene," *J. Chem. Soc., Chem. Commun.,* 16 (1 page—Abstract only) (1990).

Bartlett, P. N. et al., "Strategies for the Development of Amperometric Enzyme Electrodes," *Biosensors,* 3:359–379 (1987/88).

Bindra, D.S. et al., "Design and in Vitro Studies of a Needle–Type Glucose Sensor for Subcutaneous Monitoring", *Anal. Chem.,* 63(17):1692–1696 (Sep. 1, 1991).

Bobbioni–Harsch, E. et al., "Lifespan of subcutaneous glucose sensors and their performances during dynamic glycaemia changes in rats," *J. Biomed. Eng.* 15:457–463 (1993).

Brandt J. et al., "Covalent attachment of proteins to polysaccharide carriers by means of benzoquinone," *Biochim. Biophys. Acta,* 386(1) (1 page Abstract only) (1975).

Brownlee, M. et al., "A Glucose–Controlled Insulin–Delivery System: Semisynthetic Insulin Bound to Lectin", *Science,* 206(4423):1190–1191 (Dec. 7, 1979).

Cass, A.E.G. et al., "Ferricinum Ion As An Electron Acceptor for Oxido–Reductases," *J. Electroanal. Chem.,* 190:117–127 (1985).

Cass, A.E.G. et al., "Ferrocene–Mediated Enzyme Electrode for Amperometric Determination of Glucose", *Anal. Chem.,* 56(4):667–671 (Apr. 1984).

Castner, J. F. et al., "Mass Transport and Reaction Kinetic Parameters Determined Electrochemically for Immobilized Glucose Oxidase," *Biochemistry,* 23(10):2203–2210 (1984).

Claremont, D.J. et al., "Biosensors for Continuous In Vivo Glucose Monitoring", *IEEE Engineering in Medicine and Biology Society 10th Annual International Conference,* New Orleans, Louisiana, 3 pgs. (Nov. 4–7, 1988).

Clark L.C. et al., "Differential Anodic Enzyme Polarography for the Measurement of Glucose", *Oxygen Transport to Tissue: Instrumentation, Methods, and Physiology,* 127–132 (1973).

Clark, L.C., Jr. et al., "Electrode Systems for Continuous Monitoring in Cardiovascular Surgery," *Annals New York Academy of Sciences,* pp. 29–45 (1962).

Clark, L.C. et al., "Long–term Stability of Electroenzymatic Glucose Sensors Implanted in Mice," *Trans. Am. Soc. Artif. Intern. Organs,* XXXIV:259–265 (1988).

Clarke, W. L., et al., "Evaluating Clinical Accuracy of Systems for Self–Monitoring of Blood Glucose," *Diabetes Care,* 10(5):622–628 (Sep.–Oct. 1987).

Csöregi, E. et al., "Design, Characterization, and One–Point in Vivo Calibration of a Subcutaneously Implanted Glucose Electrode," *Anal. Chem.* 66(19):3131–3138 (Oct. 1, 1994).

Csöregi, E. et al., "Design and Optimization of a Selective Subcutaneously Implantable Glucose Electrode Based on "Wired" Glucose Oxidase," *Anal. Chem.* 67(7):1240–1244 (Apr. 1, 1995).

Csöregi, E. et al., "On–Line Glucose Monitoring by Using Microdialysis Sampling and Amperometric Detection Based on "Wired" Glucose Oxidase in Carbon Paste," *Mikrochim. Acta.* 121:31–40 (1995).

Davis, G., "Electrochemical Techniques for the Development of Amperometric Biosensors", *Biosensors,* 1:161–178 (1985).

Degani, Y. et al., "Direct Electrical Communication between Chemically Modified Enzymes and Metal Electrodes. 1. Electron Transfer from Glucose Oxidase to Metal Electrodes via Electron Relays, Bound Covalently to the Enzyme," *J. Phys. Chem.* 91(6):1285–1289 (1987).

Degani, Y. et al., "Direct Electrical Communication between Chemically Modified Enzymes and Metal Electrodes. 2. Methods for Bonding Electron–Transfer Relays to Glucose Oxidase and D–Amino–Acid Oxidase," *J. Am. Chem. Soc.,* 110(8):2615–2620 (1988).

Degani, Y. et al., "Electrical Communication between Redox Centers of Glucose Oxidase and Electrodes via Electrostatically and Covalently Bound Redox Polymers," *J. Am. Chem. Soc.,* 111:2357–2358 (1989).

Denisevich, P. et al., "Unidirectional Current Flow and Charge State Trapping at Redox Polymer Interfaces on Bilayer Electrodes: Principles, Experimental Demonstration, and Theory," *J. Am. Chem. Soc.,* 103(16):4727–4737 (1981).

Dicks, J. M., "Ferrocene modified polypyrrole with immobilised glucose oxidase and its application in amperometric glucose microbiosensors," *Ann. Biol. clin.,* 47:607–619 (1989).

Engstrom, R.C., "Electrochemical Pretreatment of Glassy Carbon Electrodes", *Anal. Chem.,* 54(13):2310–2314 (Nov. 1982).

Engstrom, R.C. et al., "Characterization of Electrochemically Pretreated Glassy Carbon Electrodes", *Anal. Chem.,* 56(2):136–141 (Feb. 1984).

Ellis, C. D., "Selectivity and Directed Charge Transfer through an Electroactive Metallopolymer Film," *J. Am. Chem. Soc.,* 103(25):7480–7483 (1981).

Feldman, B.J. et al., "Electron Transfer Kinetics at Redox Polymer/Solution Interfaces Using Microelectrodes and Twin Electrode Thin Layer Cells", *J. Electroanal. Chem.,* 194(1):63–81 (Oct. 10, 1985).

Fischer, H. et al., "Intramolecular Electron Transfer Mediated by 4,4'–Bipyridine and Related Bridging Groups", *J. Am. Chem. Soc.,* 98(18):5512–5517 (Sep. 1, 1976).

Foulds, N.C. et al., "Enzyme Entrapment in Electrically Conducting Polymers," *J. Chem. Soc., Faraday Trans 1.,* 82:1259–1264 (1986).

Foulds, N.C. et al., "Immobilization of Glucose Oxidase in Ferrocene–Modified Pyrrole Polymers," *Anal. Chem.,* 60(22):2473–2478 (Nov. 15, 1988).

Frew, J.E. et al., "Electron–Transfer Biosensors", *Phil. Trans. R Soc. Lond.,* B316:95–106 (1987).

Gorton, L. et al., "Selective detection in flow analysis based on the combination of immobilized enzymes and chemically modified electrodes," *Analytica Chimica Acta.,* 250:203–248 (1991).

Gregg, B. A. et al., "Cross–Linked Redox Gels Containing Glucose Oxidase for Amperometric Biosensor Applications," *Analytical Chemistry,* 62(3):258–263 (Feb. 1, 1990).

Gregg, B. A. et al., "Redox Polymer Films Containing Enzymes. 1. A Redox–Conducting Epoxy Cement: Synthesis, Characterization, and Electrocatalytic Oxidation of Hydroquinone," *J. Phys. Chem.,* 95(15):5970–5975 (1991).

Hale, P D et al., "A New Class of Amperometric Biosensor Incorporating a Polymeric Electron–Transfer Mediator," *J. Am. Chem. Soc.,* 111(9):3482–3484 (1989).

Harrison, D.J. et al., "Characterization of Perfluorosulfonic Acid Polymer Coated Enzyme Electrodes and a Miniaturized Integrated Potentiostat for Glucose Analysis in Whole Blood", *Anal. Chem.,* 60(19):2002–2007 (Oct. 1, 1988).

Hawkridge, F. M. et al., "Indirect Coulometric Titration of Biological Electron Transport Components," *Analytical Chemistry,* 45(7):1021–1027 (Jun. 1973).

Heller, A., "Amperometric biosensors based on three–dimensional hydrogel–forming epoxy networks," *Sensors and Actuators B.* 13–14:180–183 (1993).

Heller, A., "Electrical Connection of Enzyme Redox Centers to Electrodes," *J. Phys. Chem.,* 96(9):3579–3587 (1992).

Heller, A., "Electrical Wiring of Redox Enzymes," *Acc. Chem. Res.,* 23(5):129–134 (1990).

Ianniello, R.M. et al. "Immobilized Enzyme Chemically Modified Electrode as an Amperometric Sensor", *Anal. Chem.,* 53(13):2090–2095 (Nov. 1981).

Ianniello, R.M. et al., "Differential Pulse Voltammetric Study of Direct Electron Transfer in Glucose Oxidase Chemically Modified Graphite Electrodes", *Anal. Chem.,* 54(7):1098–1101 (Jun. 1981).

Ikeda, T. et al., "Glucose oxidase–immobilized benzoquinone–carbon paste electrode as a glucose sensor," *Agric. Biol. Chem.,* 49(2) (1 page—Abstract only) (1985).

Ikeda, T. et al., "Kinetics of Outer–Sphere Electron Transfers Between Metal Complexes in Solutions and Polymeric Films on Modified Electrodes", *J. Am. Chem. Soc.,* 103(25):7422–7425 (Dec. 16, 1981).

Johnson, J. M. et al., "Potential–Dependent Enzymatic Activity in an Enzyme Thin–Layer Cell," *Anal. Chem.* 54:1377–1383 (1982).

Johnson, K. W., "Reproducible Electrodeposition of Biomolecules for the Fabrication of Miniature Electroenzymatic Biosensors", *Sensors and Actuators B Chemical,* B5:85–89 (1991).

Jonsson, G. et al., "An Amperometric Glucose Sensor Made by Modification of a Graphite Electrode Surface With Immobilized Glucose Oxidase and Adsorbed Mediator", *Biosensors,* 1:355–368 (1985).

Josowicz, M. et al., "Electrochemical Pretreatment of Thin Film Platinum Electrodes", *J. Elecrochem. Soc.,* 135(1):112–115 (Jan. 1988).

Katakis, I. et al., "Electrostatic Control of the Electron Transfer Enabling Binding of Recombinant Glucose Oxidase and Redox Polyelectrolytes," *J. Am. Chem. Soc.,* 116(8):3617–3618 (1994).

Katakis, I. et al., "L–α–Glycerophosphate and L–Lactate Electrodes Based on the Electrochemical "Wiring" of Oxidases," *Analytical Chemistry,* 64(9):1008–1013 (May 1, 1992).

Kenausis, G. et al., "Wiring of glucose oxidase and lactate oxidase within a hydrogel made with poly(vinyl pyridine) complexed with $[Os(4,4'\text{–dimethoxy–}2,2'\text{–bipyridine})_2C1]^{+/2+}$," *J. Chem. Soc., Faraday Trans.,* 90(20):4131–4136 (1996).

Koudelka, M. et al., "In–Vivo Behaviour of Hypodermically Implanted Microfabricated Glucose Sensors", *Biosensors & Bioelectronics,* 6(1):31–36 (1991).

Kulys, J. et al., "Mediatorless peroxidase electrode and preparation of bienzyme sensors," *Bioelectrochemistry and Bioenergetics,* 24:305–311 (1990).

Lager, W. et al., "Implantable Electrocatalytic Glucose Sensor," *Horm. Metab. Res.,* 26:526–530 (Nov. 1994).

Lindner, E. et al. "Flexible (Kapton–Based) Microsensor Arrays of High Stability for Cardiovascular Applications", *J. Chem. Soc, Faraday Trans.,* 89(2):361–367 (Jan. 21, 1993).

Maidan, R. et al., "Elimination of Electrooxidizable Interferant–Produced Currents in Amperometric Biosensors," *Analytical Chemistry,* 64(23):2889–2896 (Dec. 1, 1992).

Mastrototaro, J.J. et al., "An Electroenzymatic Glucose Sensor Fabricated on a Flexible Substrate", *Sensors and Biosensors B Chemical,* B5:139–144 (1991).

McNeil, C. J. et al., "Thermostable Reduced Nicotinamide Adenine Dinucleotide Oxidase: Application to Amperometric Enzyme Assay," *Anal. Chem.,* 61(1):25–29 (Jan. 1, 1989).

Miyawaki, O. et al., "Electrochemical and Glucose Oxidase Coenzyme Activity of Flavin Adenine Dinucleotide Covalently Attached to Glassy Carbon at the Adenine Amino Group", *Biochimica et Biophysica Acta,* 838:60–68 (1985).

Moatti–Sirat, D. et al., "Evaluating in vitro and in vivo the inteference of ascorbate and acetaminophen on glucose detection by a needle–type glucose sensor," *Biosensors & Bioelectronics,* 7(5):345–352 (1992).

Moatti–Sirat, D. et al., "Reduction of acetaminophen interference in glucose sensors by a composite Nafion membrane: demonstration in rats and man," *Diabetologia,* 37(6) (1 page—Abstract only) (Jun. 1994).

Moatti–Sirat, D. et al., "Towards continuous glucose monitoring: in vivo evaluation of a miniaturized glucose sensor implanted for several days in rat subcutaneous tissue," *Diabetologia,* 35(3) (1 page—Abstract only) (Mar. 1992).

Nagy, G. et al., "A New Type of Enzyme Electrode: The Ascorbic Acid Eliminator Electrode," *Life Sciences,* 31(23):2611–2616 (1982).
Nakamura, S. et al., "Effect of Periodate Oxidation on the Structure and Properties of Glucose Oxidase," *Biochimica et Biophysica Acta.,* 445:294–308 (1976).
Narazimhan, K. et al., "p–Benzoquinone activation of metal oxide electrodes for attachment of enzymes," *Enzyme Microb. Technol.,* 7(6) (1 page—Abstract only) (1985).
Ohara, T. J. et al., "Glucose Electrodes Based on Cross–Linked $[Os(bpy)_2C1]^{+/2+}$ Complexed Poly(1–vinylimadazole) Films," *Analytical Chemistry,* 65(23):3512–3516 (Dec. 1, 1993).
Ohara, T. J., "Osmium Bipyridyl Redox Polymers Used in Enzyme Electrodes," *Platinum Metals Rev.,* 39(2):54–62 (Apr. 1995).
Ohara, T. J. et al., ""Wired" Enzyme Electrodes for Amperometric Determination of Glucose or Lactate in the Presence of Interfering Substances," *Analytical Chemistry,* 66(15):2451–2457 (Aug. 1, 1994).
Olievier, C. N. et al., "In vivo Measurement of Carbon Dioxide Tension with a Miniature Electrode," *Pflugers Arch.* 373:269–272 (1978).
Paddock, R. et al., "Electrocatalytic reduction of hydrogen peroxide via direct electron transfer from pyrolytic graphite electrodes to irreversibly adsorbed cytochrome c peroxidase," *J. Electroanal. Chem.,* 260:487–494 (1989).
Palleschi, G. et al., "A Study of Interferences in Glucose Measurements in Blood by Hydrogen Peroxide Based Glucose Probes", *Anal. Biochem.,* 159:114–121 (1986).
Pankramov, I. et al., "Sol–gel derived renewable–surface biosensors," *Journal of Electroanalytical Chemistry,* 393:35–41 (1995).
Pathak, C. P. et al., "Rapid Photopolymerization of Immunoprotective Gels in Contact with Cells and Tissue," *J. Am. Chem. Soc.,* 114(21):8311–8312 (1992).
Pickup, J., "Developing glucose sensors for in vivo use," *Tibtech,* 11:285–289 (Jul. 1993).
Pickup, J. C. et al., "In vivo molecular sensing in diabetes mellitus: an implantable glucose sensor with direct electron transfer," *Diabetologia,* 32(3):213–217 (1989).
Pickup, J. et al., "Potentially–implantable, amperometric glucose sensors with mediated electron transfer: improving the operating stability," *Biosensors,* 4(2) (1 page—Abstract only) (1989).
Pishko, M.V. et al., "Amperometric Glucose Microelectrodes Prepared Through Immobilization of Glucose Oxidase in Redox Hydrogels", *Anal. Chem.,* 63(20):2268–2272 (Oct. 15, 1991).
Poitout, V. et al., "A glucose monitoring system for on line estimation in man of blood glucose concentration using a miniaturized glucose sensor implanted in the subcutaneous tissue and a wearable control unit," *Diabetologia,* 36(7) (1 page—Abstract only) (Jul. 1993).
Poitout, V. et al., "Calibration in dogs of a subcutaneous miniaturized glucose sensor using a glucose meter for blood glucose determination," *Biosensors & Bioelectronics,* 7:587–592 (1992).
Poitout, V. et al., "In vitro and in vivo evaluation in dogs of a miniaturized glucose sensor," *ASAIO Transactions,* 37(3) (1 page—Abstract only) (Jul.–Sep. 1991).
Pollak, A. et al., "Enzyme immobilization by Condensation Copolymerization into Cross–Linked Polyacrylamide Gels," *J. Am. Chem. Soc.,* 102(20):6324–6336 (1980).
Reach, G. et al., "Can Continuous Glucose Monitoring Be Used for the Treatment of Diabetes?" *Analytical Chemistry,* 64(6):381–386 (Mar. 15, 1992).
Rebrin, K. et al., "Automated Feedback Control of subcutaneous Glucose Concentration in Diabetic Dogs", *Diabetologia,* 32(8):573–576 (Aug. 1989).
Sakakida, M. et al., "Ferrocene–mediate needle–type glucose sensor covered with newly designed biocompatible membrane," *Sensors and Actuators B,* 13–14:319–322 (1993).
Samuels, G. J. et al., "An Electrode–Supported Oxidation Catalyst Based on Ruthenium (IV). pH "Encapsulation" in a Polymer Film," *J. Am. Chem. Soc.,* 103(2):307–312 (1981).
Sasso, S.V. et al., "Electropolymerized 1,2–Diaminobenzene as a Means to Prevent Interferences and Fouling and to Stabilize Immobilized Enzyme in Electrochemical Biosensors", *Anal. Chem.,* 62(11):1111–1117 (Jun. 1, 1990).
Scheller, F. et al., "Enzyme electrodes and their application," *Phil. Trans. R Soc. Lond.,* B 316:85–94 (1987).
Schmehl, R.H. et al., "The Effect of Redox Site Concentration on the Rate of Mediated Oxidation of Solution Substrates by a Redox Copolymer Film", *J. Electroanal. Chem.,* 152:97–109 (Aug. 25, 1983).
Shichiri, M. et al., "Glycaemic Control in Pancrearetomized Dogs with a Wearable Artificial Endocrine Pancreas", *Diabetologia,* 24(3):179–184 (Mar. 1983).
Sirtampalam, G. et al., "Surface–Modified Electrochemical Detector for Liquid Chromatography", *Anal. Chem.,* 55(9):1608–1610 (Aug. 1983).
Soegijoko, S. et al., *Horm. Metabl. Res., Suppl. Ser.* 12 (1 page—Abstract only) (1982).
Sprules, S. D. et al., "Evaluation of a New Disposable Screen–Printed Sensor Strip for the Measurement of NADH and Its Modification to Produce a Lactate Biosensor Employing Microliter Volumes," *Electroanalysis,* 8(6):539–543 (1996).
Sternberg, F. et al., "Calibration Problems of Subcutaneous Glucosensors when Applied "In–Situ" in Man," *Horm. metabl. Res.* 26:524–525 (1994).
Sternberg, R. et al., "Covalent Enzyme Coupling on Cellulose Acetate Membranes for Glucose Sensor Development," *Analytical Chemistry,* 60(24):2781–2786 (Dec. 15, 1988).
Sternberg, R. et al., "Study and Development of Multilayer Needle–type Enzyme–based Glucose Microsensors," *Biosensors,* 4:27–40 (1988).
Suckane, M., "Immobilization of glucose isomerase," *Zeitschrift fur Allgemeine Mikrobiologie,* 22(8):565–576 (1982).
Tajima, S. et al., "Simultaneous Determination of Glucose and 1,5–Anydroglucitol", *Chemical Abstracts,* 111(25):394 111:228556g (Dec. 18, 1989).
Tarasevich, M.R. "Bioelectrocatalysis", *Comprehensive Treasige of Electrochemistry,* 10 (Ch. 4):231–295 (1985).
Tatsuma, T. et al., "Enzyme Monolayer– and Bilayer–Modified Tin Oxide Electrodes for the Determination of Hydrogen Peroxide and Glucose," *Anal. Chem.,* 61(21):2352–2355 (Nov. 1, 1989).
Taylor, C. et al., "'Wiring' of glucose oxidase within a hydrogel made with polyvinyl imidazole complexed with $[(Os–4,4'–dimethoxy–2,2'–bipyridine)C1]^{+/2+}$," *Journal of Electroanalytical Chemistry,* 396:511–515 (1995).

Trojanowicz, M. et al., "Enzyme Entrapped Polypyrrole Modified Electrode for Flow–Injection Determination of Glucose," *Biosensors & Bioelectronics,* 5:149–156 (1990).
Turner, A.P.F. et al., "Diabetes Mellitus: Biosensors for Research and Management", *Biosensors,* 1:85–115 (1985).
Turner, R.F.B. et al., "A Biocompatible Enzyme Electrode for Continuous in vivo Glucose Monitoring in Whole Blood," *Sensors and Actuators,* B1(1–6):561–564 (Jan. 1990).
Tuzhi, P. et al., "Constant Potential Pretreatment of Carbon Fiber Electrodes for In vivo Electrochemistry", *Analytical Letters,* 24(6):935–945 (1991).
Umaha, M., "Protein–Modified Electrochemically Active Biomaterial Surface," *U S. Army Research Office Report,* (12 pages) (Dec. 1988).
Urban, G. et al., "Miniaturized Thin–Film Biosensors Using Covalently Immobilized Glucose Oxidase", *Biosensors & Bioelectronics,* 6(7):555–562 (1991).
Velho, G. et al., "In Vitro and In Vivo Stability of Electrode Potentials in Needle–Type Glucose Sensors", *Diabetes,* 38(2):164–171 (Feb. 1989).
Velho, G. et al., "Strategies for calibrating a subcutaneous glucose sensor," *Biomed. Biochim. Acta,* 48(11/12);957–964 (1989).
Von Woedtke, T. et al., "In Situ Calibration of Implanted Electrochemical Glucose Sensors," *Biomed. Biochim. Acta,* 48(11/12):943–952 (1989).
Vrecke, M. S. et al., "Chapter 15: Hydrogen Peroxide Electrodes Based on Electrical Connection of Redox Centers of Various Peroxidases to Electrodes through a Three–Dimensional Electron–Relaying Polymer Network," *Diagnostic Biosensor Polymers,* 7 pgs. (Jul. 26, 1993).
Vrecke, M. et al., "Hydrogen Peroxide and β–Nicotinamide Adenine Dinucleotide Sensing Amperometric Electrodes Based on Electrical Connection of Horseradish Peroxidase Redox Centers to Electrodes through a Three–Dimensional Electron Relaying Polymer Network," *Analytical Chemistry,* 64(24):3084–3090 (Dec. 15, 1992).
Wang, J. et al., "Activation of Glassy Carbon Electrodes by Alternating Current Electrochemical Treatment", *Analytica Chimica Acta,* 167:325–334 (Jan. 1985).
Wang, J. et al., "Amperometric biosensing of organic peroxides with peroxidase–modified electrodes," *Analytica Chimica Acta.* 254:81–88 (1991).
Wang, D. L. et al., "Miniaturized Flexible Amperometric Lactate Probe," *Analytical Chemistry,* 65(8):1069–1073 (Apr. 15, 1993).
Wang, J. et al., "Screen–Printable Sol–Gel Enzyme–Containing Carbon Inks," *Analytical Chemistry,* 68(15):2705–2708 (Aug. 1, 1996).
Wang, J. et al., "Sol–Gel–Derived Metal–Dispersed Carbon Composite Amperometric Biosensors," *Electroanalysis,* 9(1):52–55 (1997).
Williams, D.L. et al., "Electrochemical–Enzymatic Analysis of Blood Glucose and Lactate", *Anal. Chem.,* 42(1):118–121 (Jan. 1970).
Wilson, G. S. et al., "Progress toward the Development of an Implantable Sensor for Glucose," *Clinical Chemistry,* 38(9):1613–1617 (1992).
Yabuki, S. et al., "Electro–conductive Enzyme Membrane," *J. Chem. Soc. Commun,* 945–946 (1989).
Yang, I. et al., "Determination of Oxidase Enzyme Substrates Using Cross–Flow Thin–Layer Amperometry," *Electroanalysis,* 8(8–9):716–721 (1996).
Yao, S.J. et al., "The Interference of Ascorbate and Urea in Low–Potential Electrochemical Glucose Sensing", *Proceedings of the Twelfth Annual International Conference of the IEEE Engineering in Medicine and Biology Society,* 12(2):487–489 (Nov. 1–4, 1990).
Yao, T. et al., "A Chemically–Modified Enzyme Membrane Electrode As An Amperometric Glucose Sensor," *Analytica Chimica Acta.,* 148:27–33 (1983).
Ye, L. et al., "High Current Density "Wired" Quinoprotein Glucose Dehydrogenase Electrode," *Anal. Chem.,* 65(3):238–241 (Feb. 1, 1993).
Yildiz, A. et al., "Evaluation of an Improved Thin–Layer Electrode," *Analytical Chemistry,* 40(70):1018–1024 (Jun. 1968).
Zamzow, K. et al., New Wearable Continuous Blood Glucose Monitor (BGM) and Artificial Pancreas (AP), *Diabetes,* 39:5A(20) (May 1990).
Zhang, Y. et al., "Application of cell culture toxicity tests to the development of implantable biosensors," *Biosensors & Bioelectronics,* 6:653–661 (1991).
Zhang, Y. et al., "Elimination of the Acetaminophen Interference in an Implantable Glucose Sensor," *Anal. Chem,* 66:1183–1188 (1994).

* cited by examiner

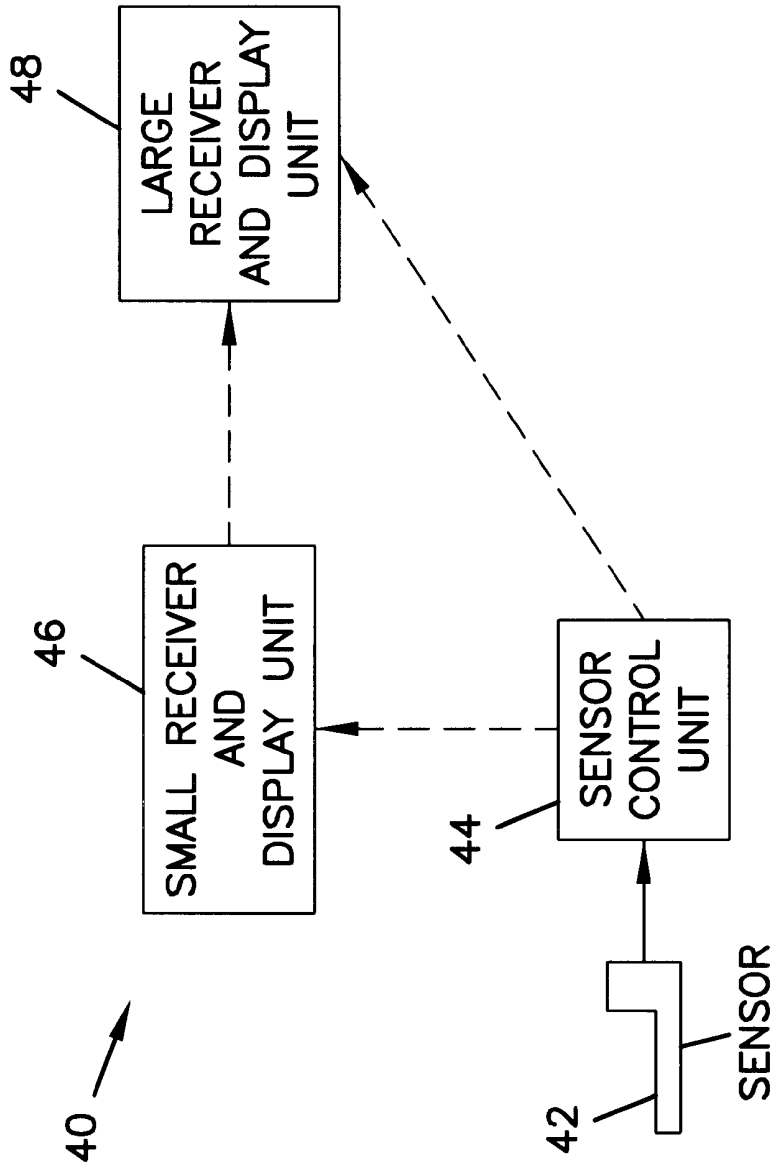
48
LARGE RECEIVER AND DISPLAY UNIT
46
SMALL RECEIVER AND DISPLAY UNIT
44
SENSOR CONTROL UNIT
40
42
SENSOR

FIG. 1

FIG. 2

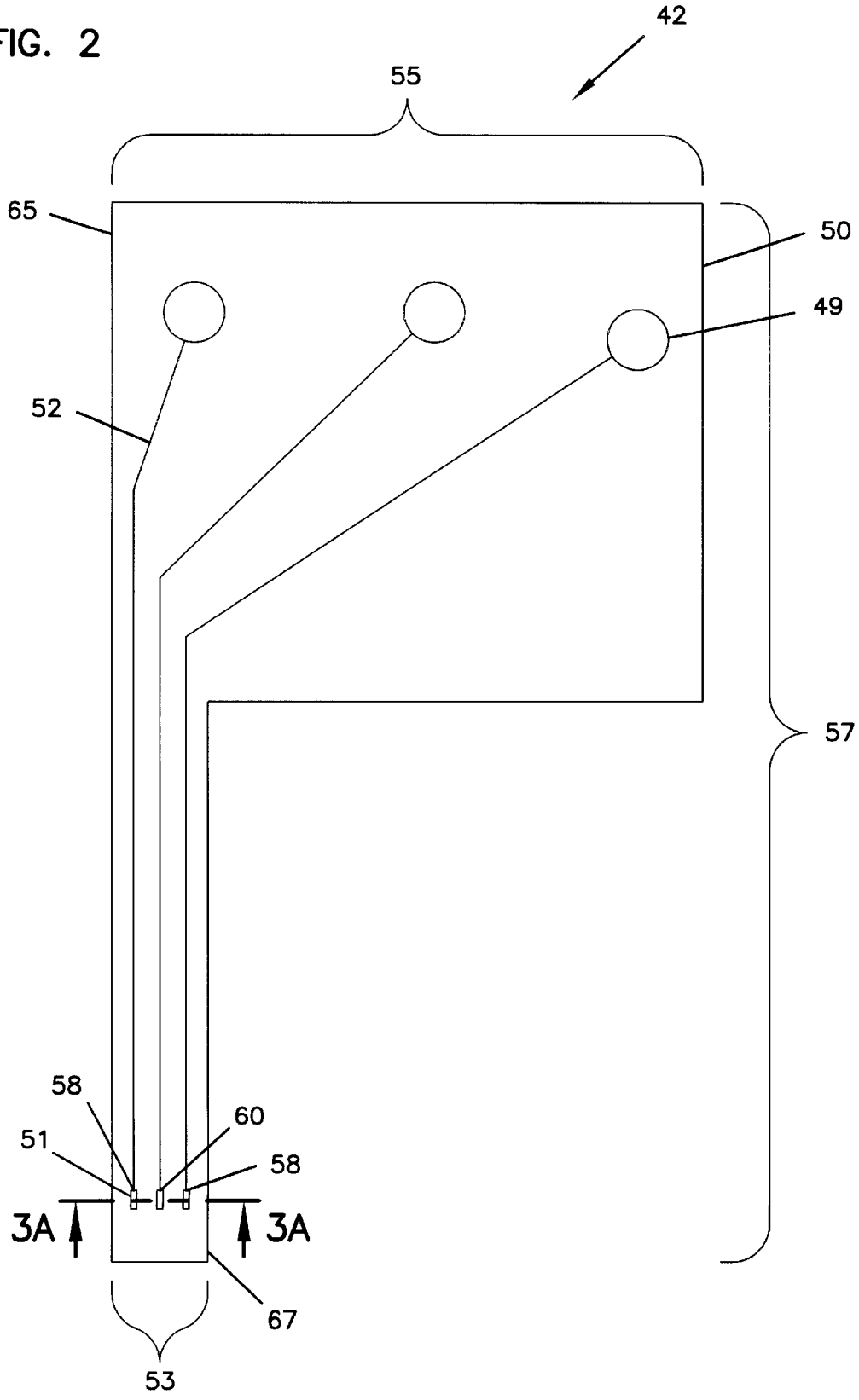

FIG. 3A

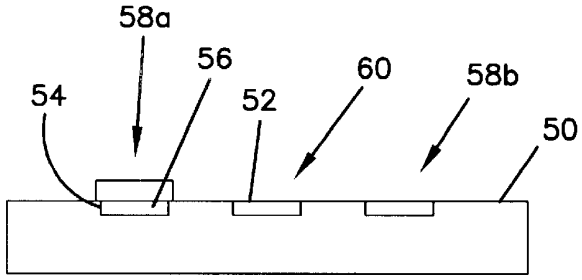

FIG. 3B

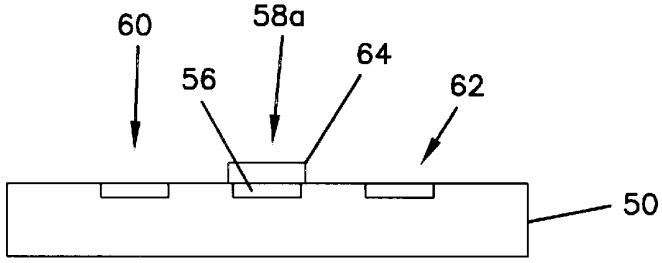

FIG. 9

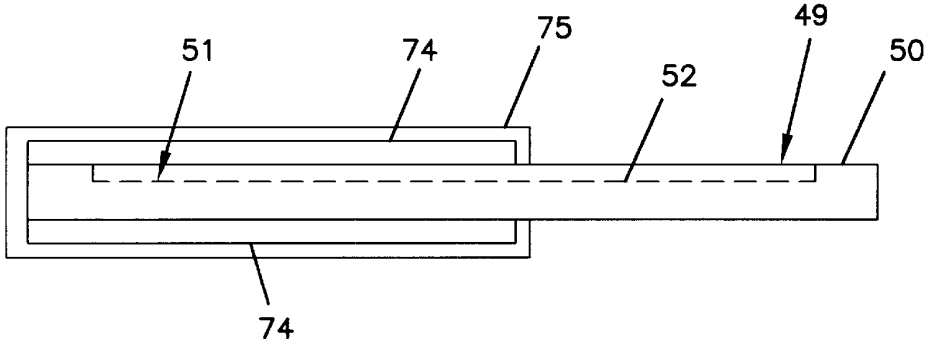

FIG. 4A

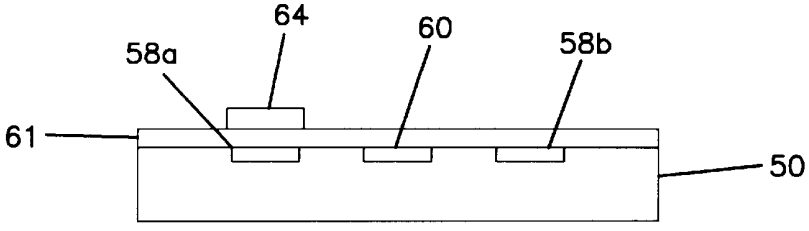

FIG. 4B

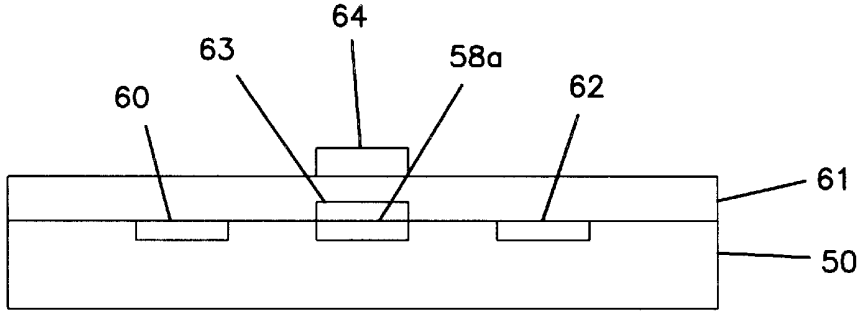

FIG. 5

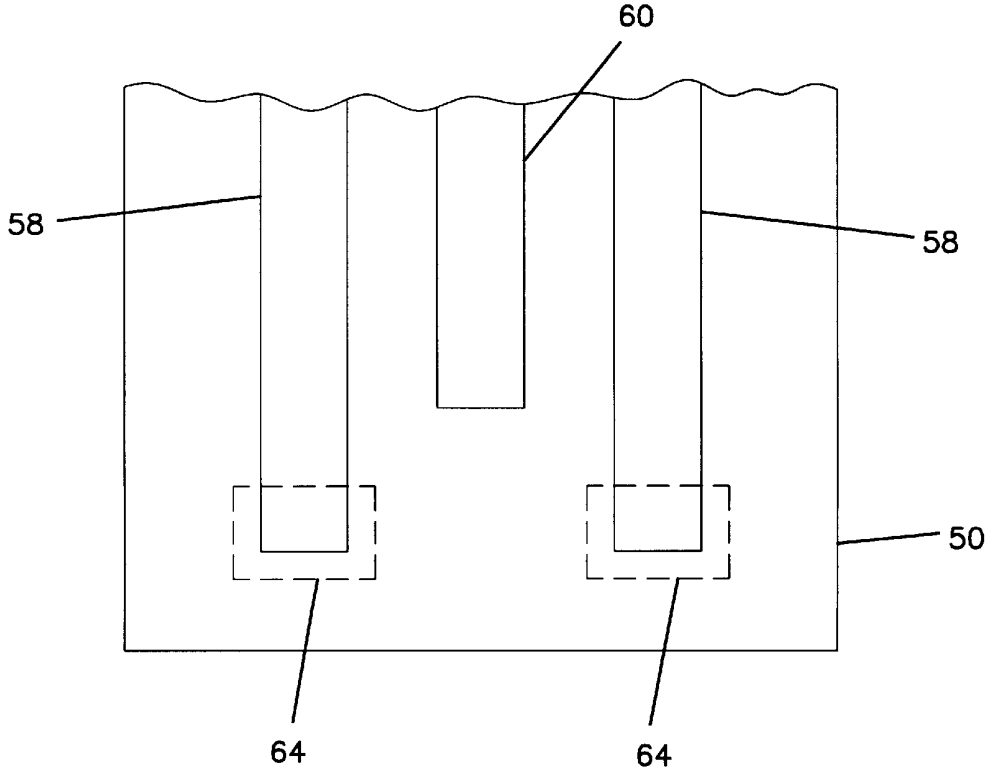

FIG. 6

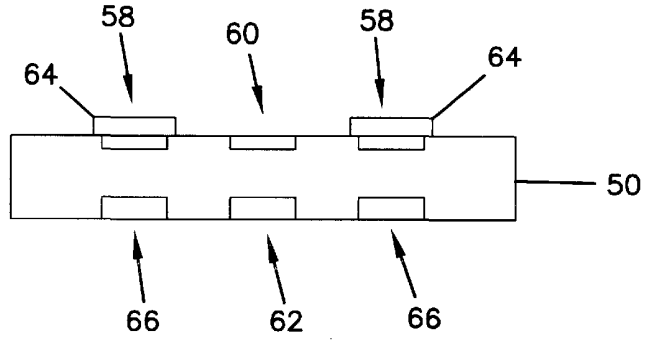

FIG. 7

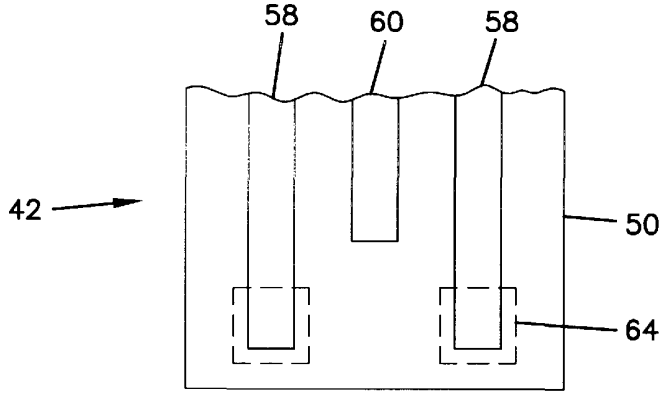

FIG. 8

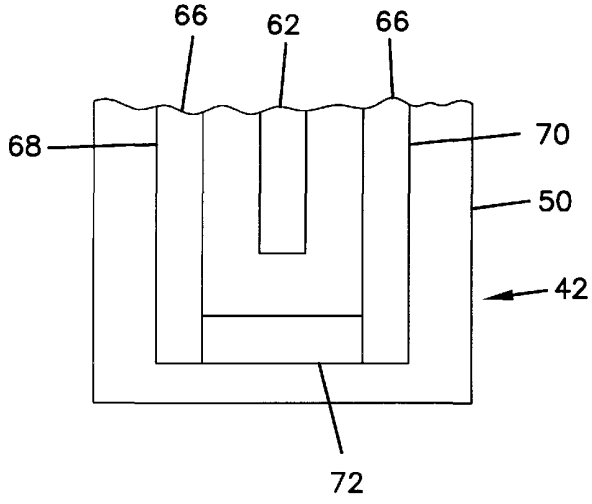

FIG. 10

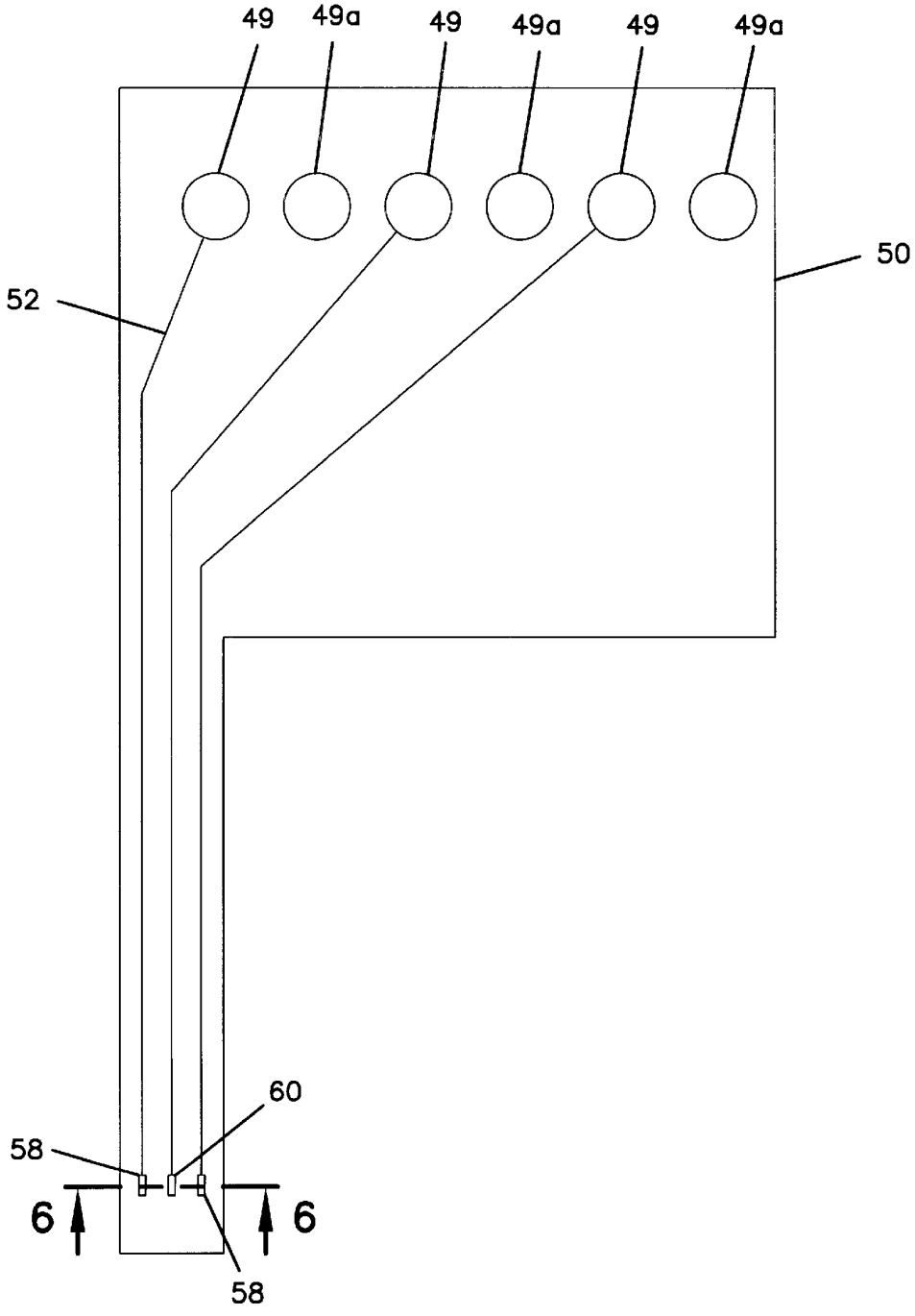

FIG. 11

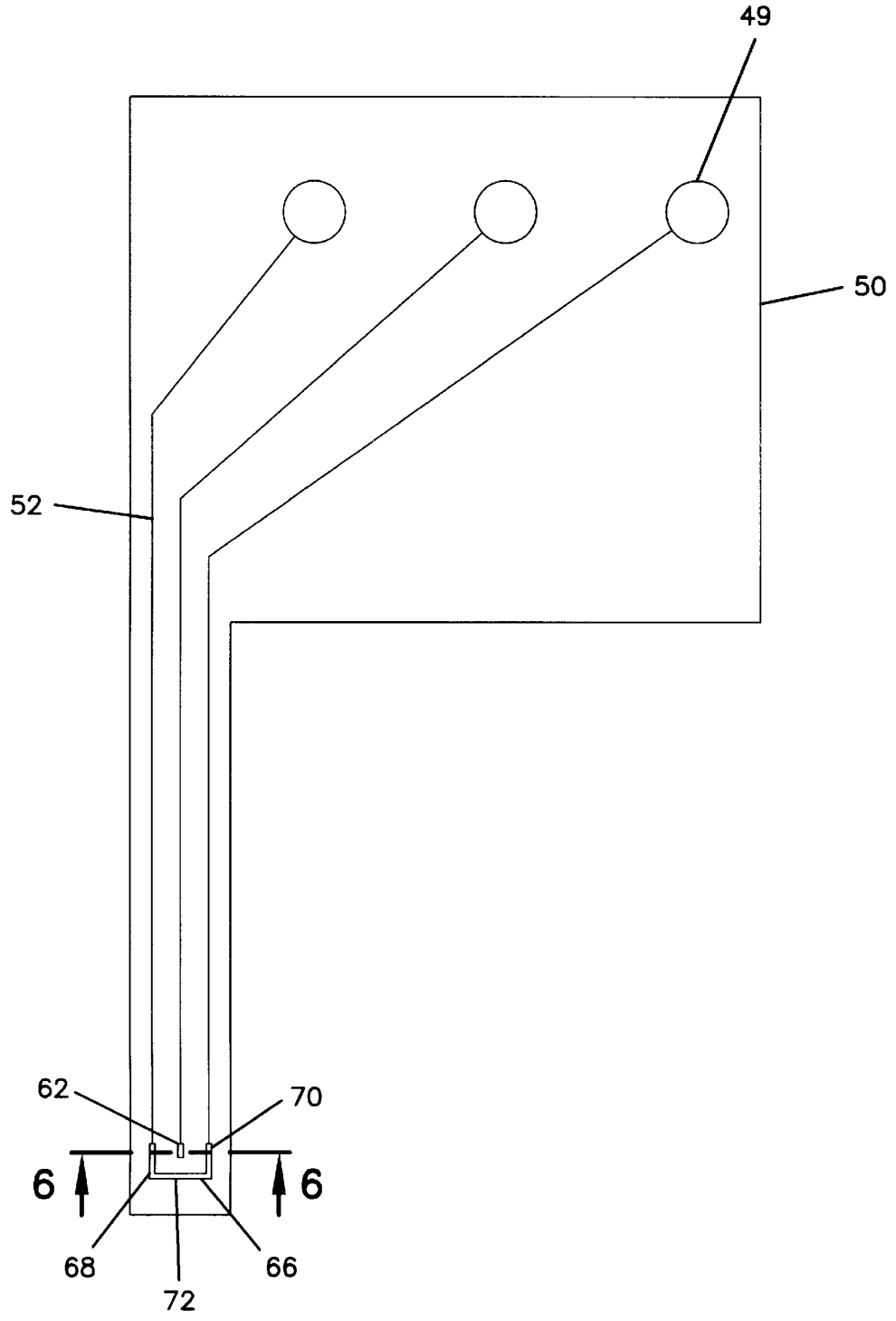

FIG. 12

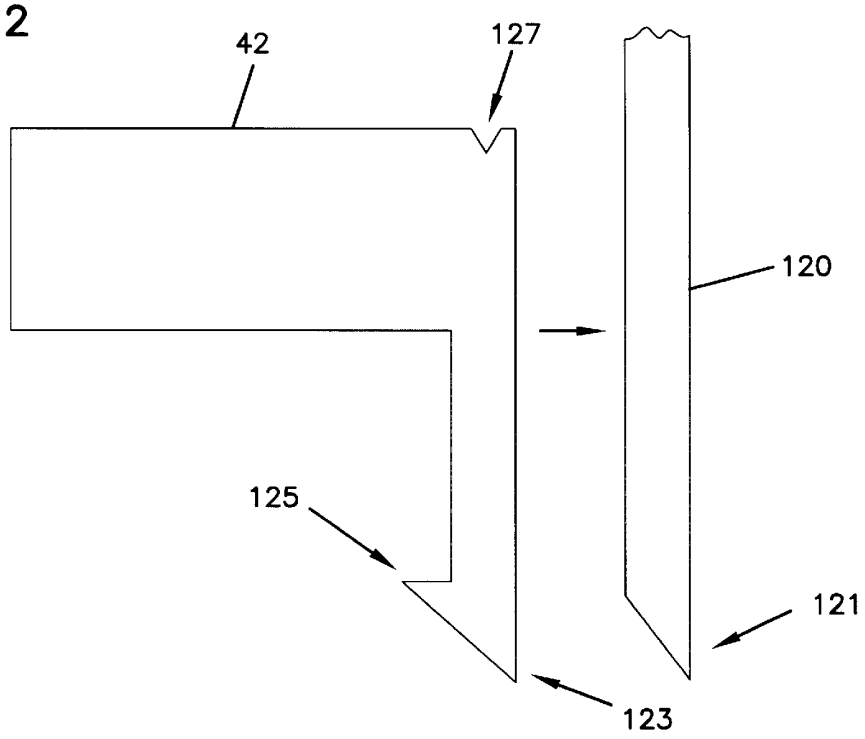

FIG. 13A

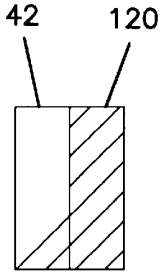

FIG. 13B

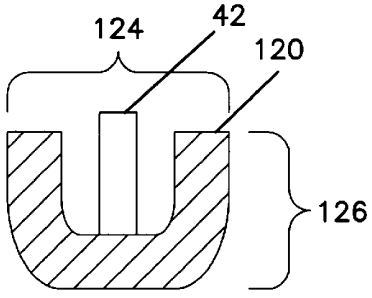

FIG. 13C

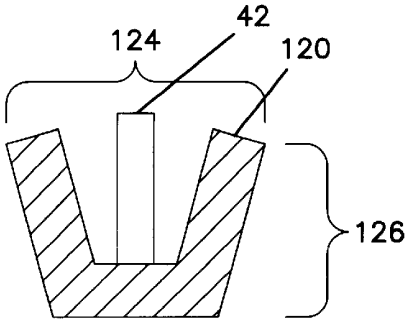

FIG. 15

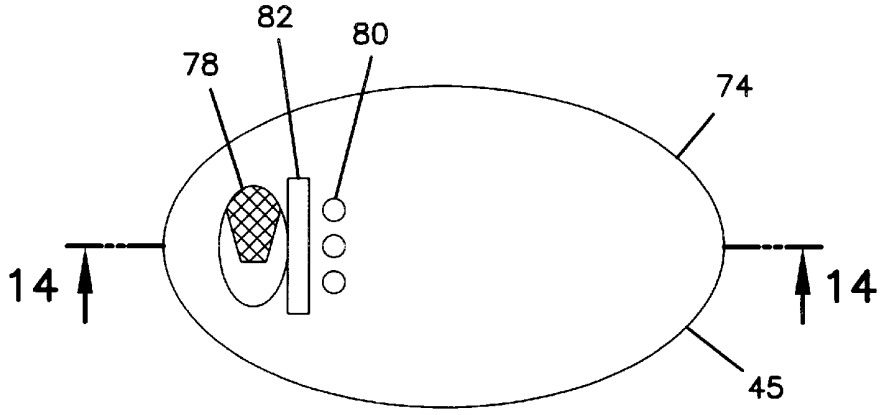

FIG. 16

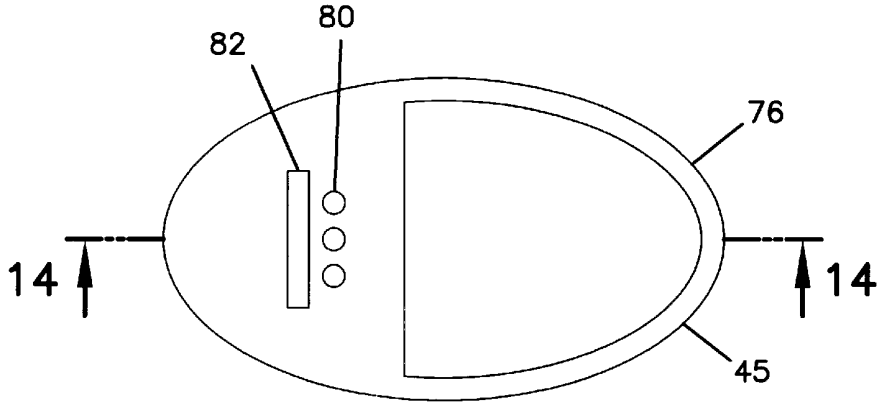

FIG. 14

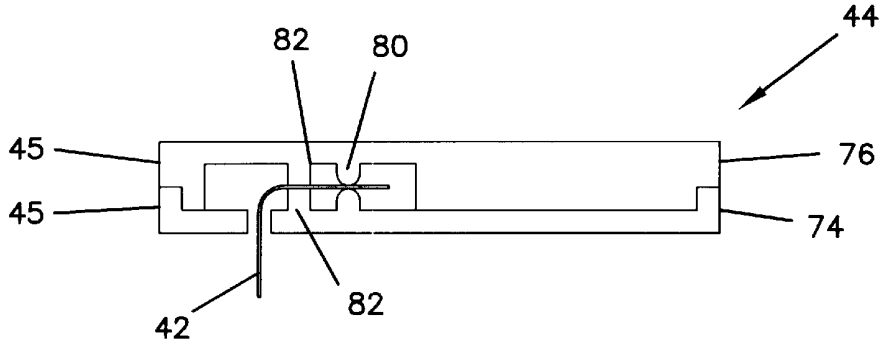

FIG. 17

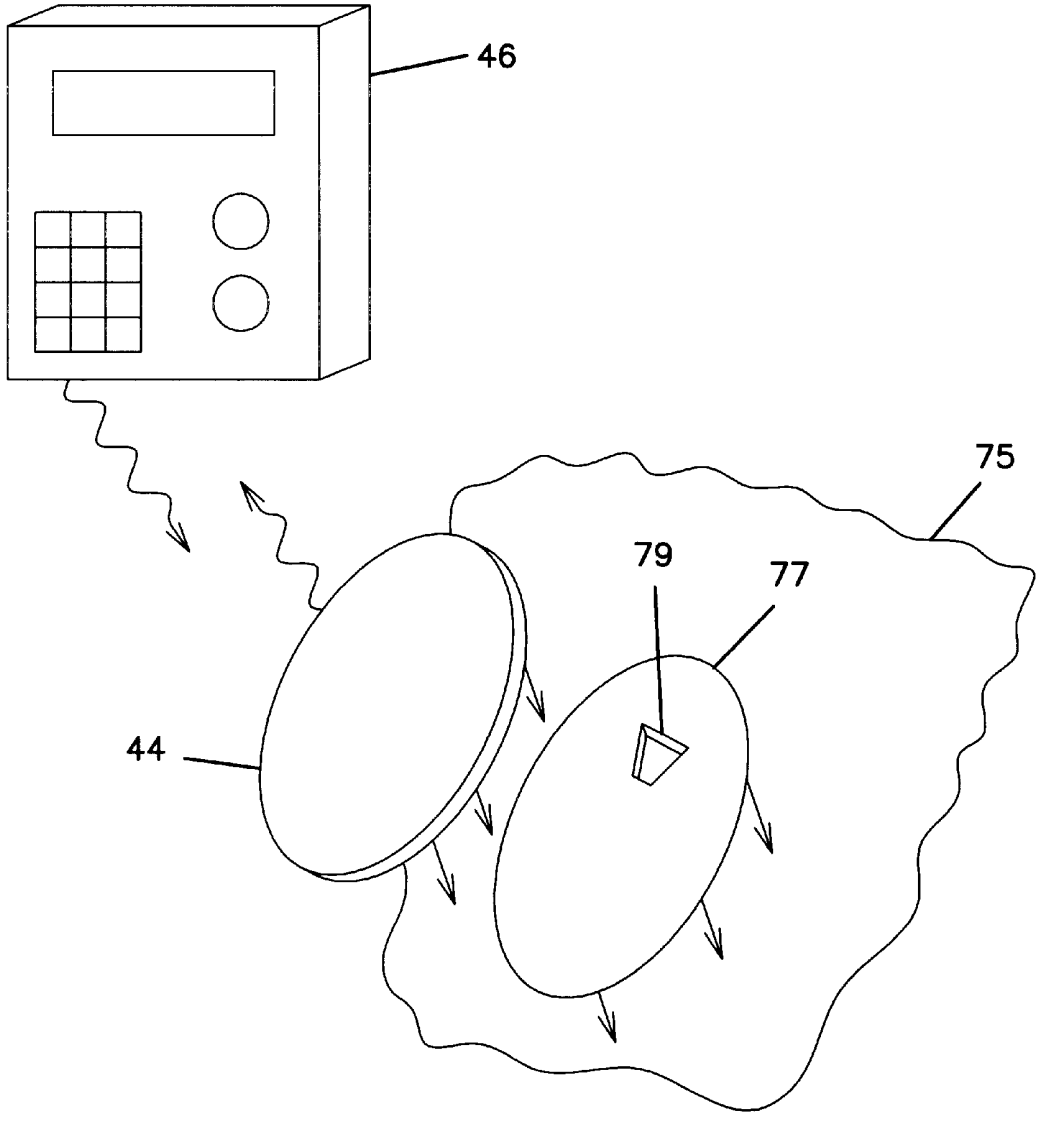

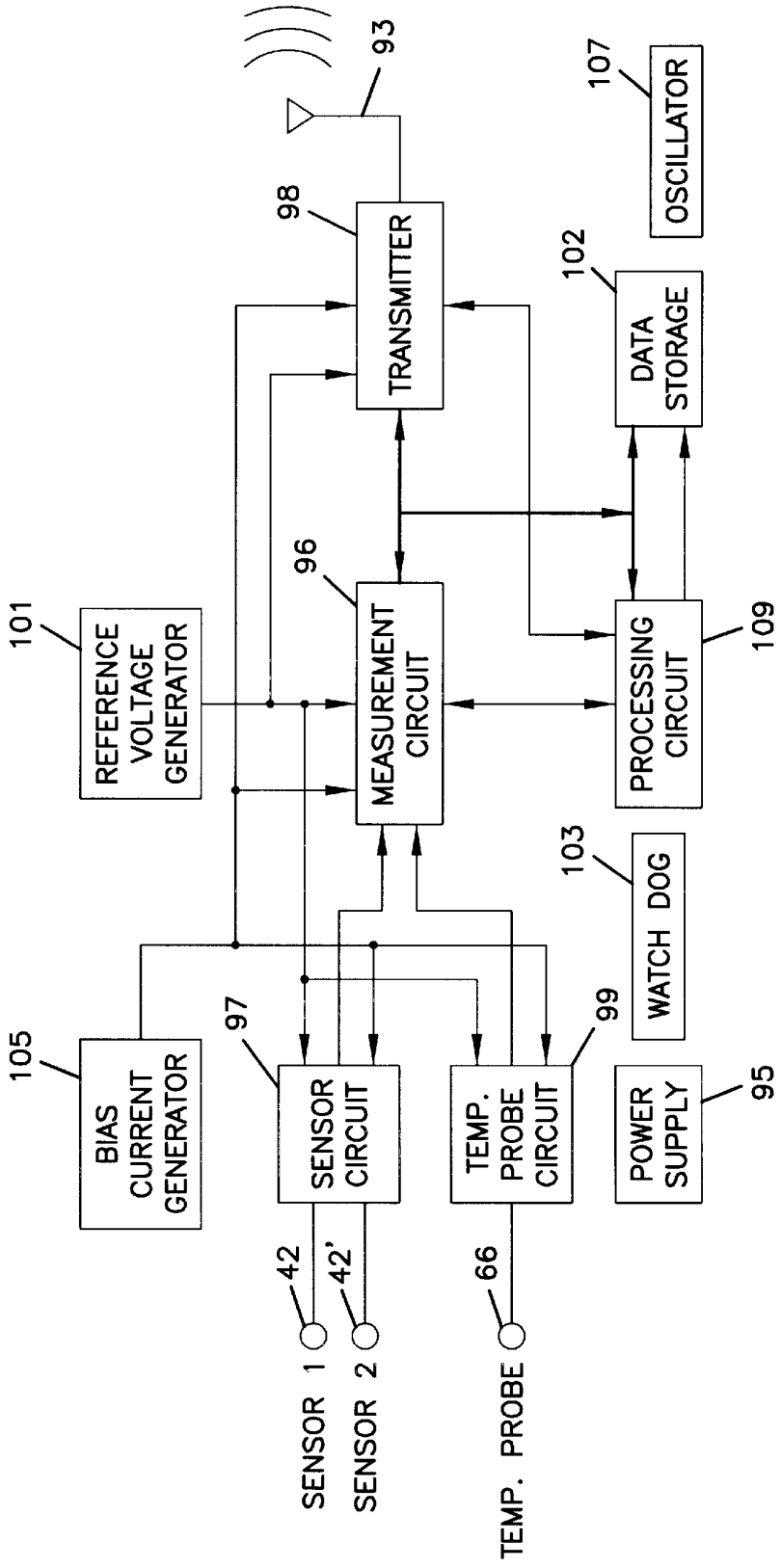
93
98
TRANSMITTER
107
OSCILLATOR
102
DATA STORAGE
96
MEASUREMENT CIRCUIT
101
REFERENCE VOLTAGE GENERATOR
PROCESSING CIRCUIT
109
103
WATCH DOG
105
BIAS CURRENT GENERATOR
97
SENSOR CIRCUIT
TEMP. PROBE CIRCUIT
99
POWER SUPPLY
95
42
42'
66
SENSOR 1
SENSOR 2
TEMP. PROBE

FIG. 18A

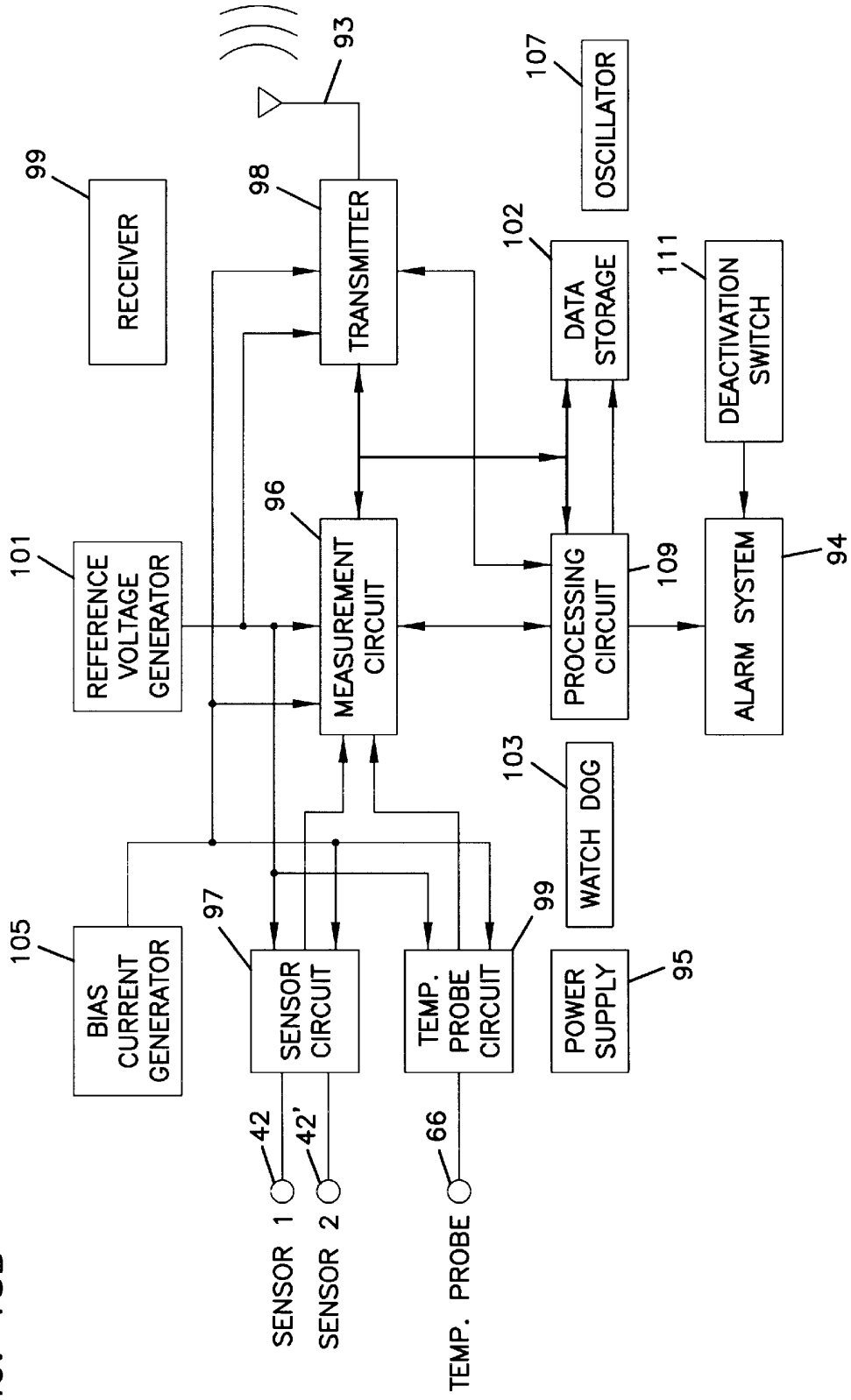
RECEIVER
99
TRANSMITTER
98
93
OSCILLATOR
107
DATA STORAGE
102
DEACTIVATION SWITCH
111
REFERENCE VOLTAGE GENERATOR
101
MEASUREMENT CIRCUIT
96
PROCESSING CIRCUIT
109
ALARM SYSTEM
94
WATCH DOG
103
BIAS CURRENT GENERATOR
105
SENSOR CIRCUIT
97
TEMP. PROBE CIRCUIT
99
POWER SUPPLY
95
42
42'
66
SENSOR 1
SENSOR 2
TEMP. PROBE

FIG. 18B

FIG. 19A

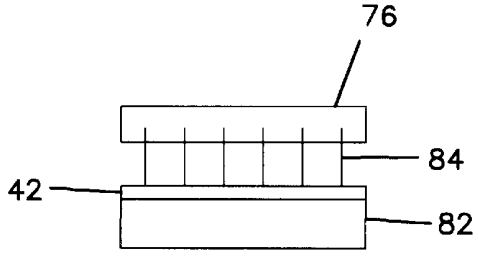

FIG. 19B

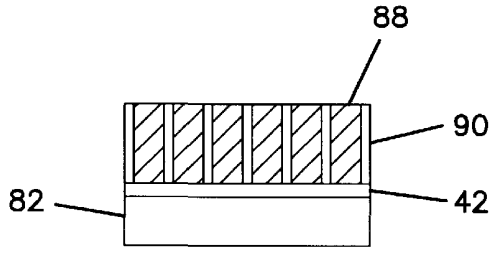

FIG. 19C

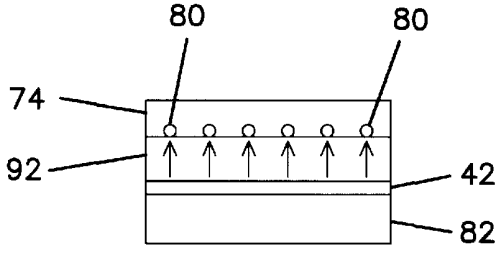

FIG. 19D

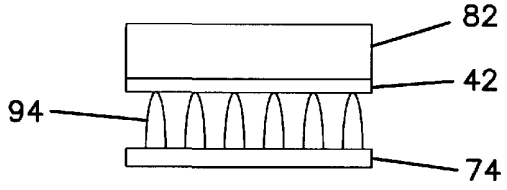

FIG. 19E

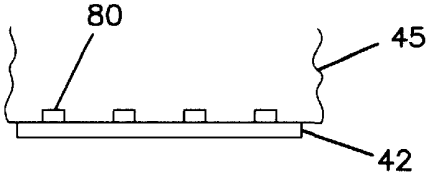

FIG. 19F

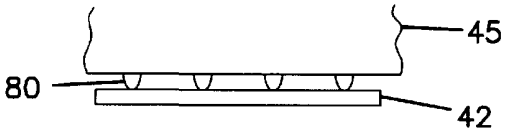

FIG. 20A

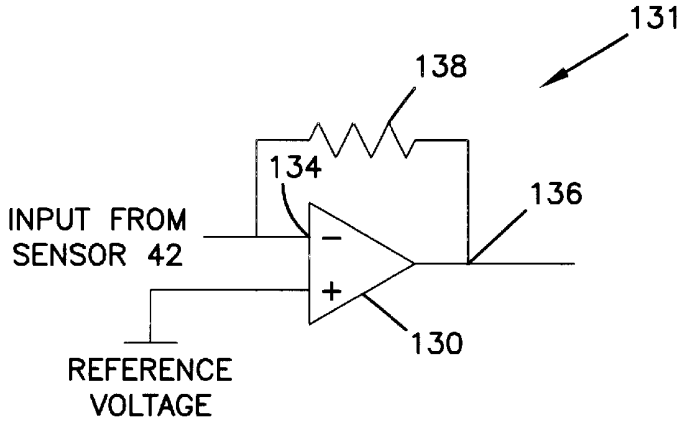

FIG. 20B

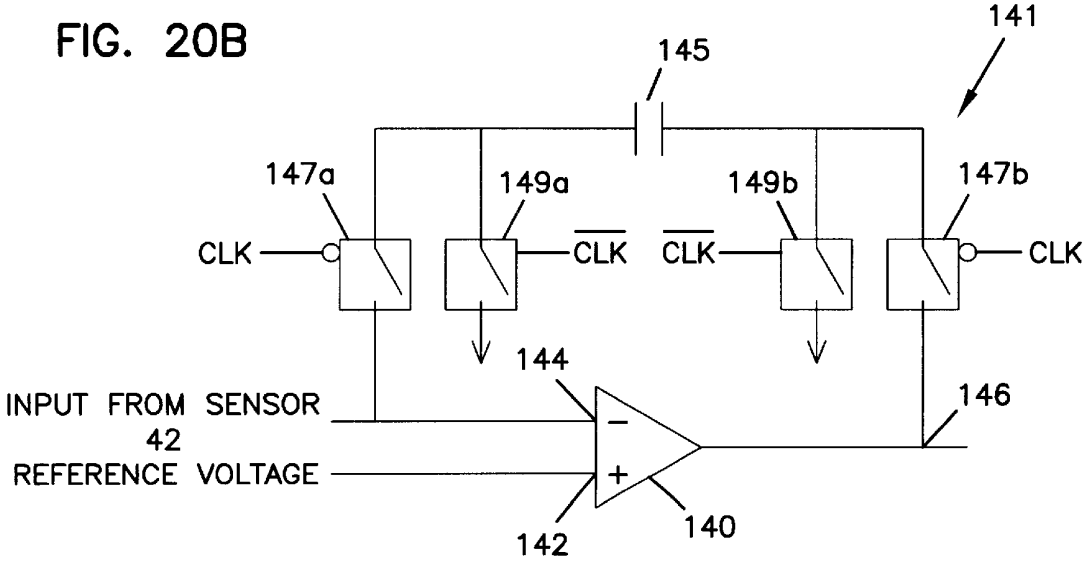

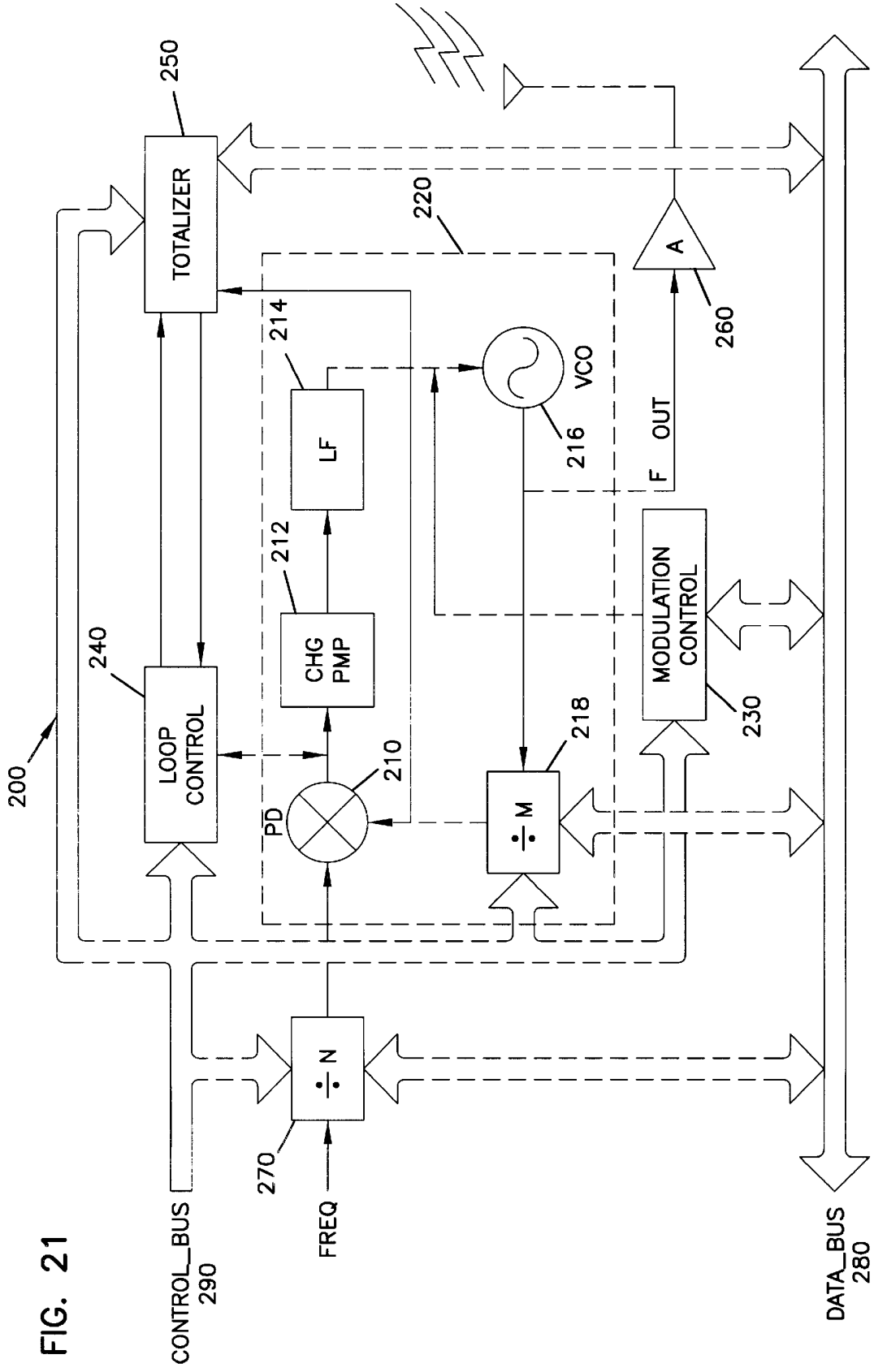
TOTALIZER
250
220
A
260
214
LF
VCO
216
F OUT
212
CHG PMP
MODULATION CONTROL
230
240
LOOP CONTROL
218
210
PD
÷ M
200
÷ N
270
FREQ
CONTROL_BUS 290
DATA_BUS 280

FIG. 21

FIG. 22

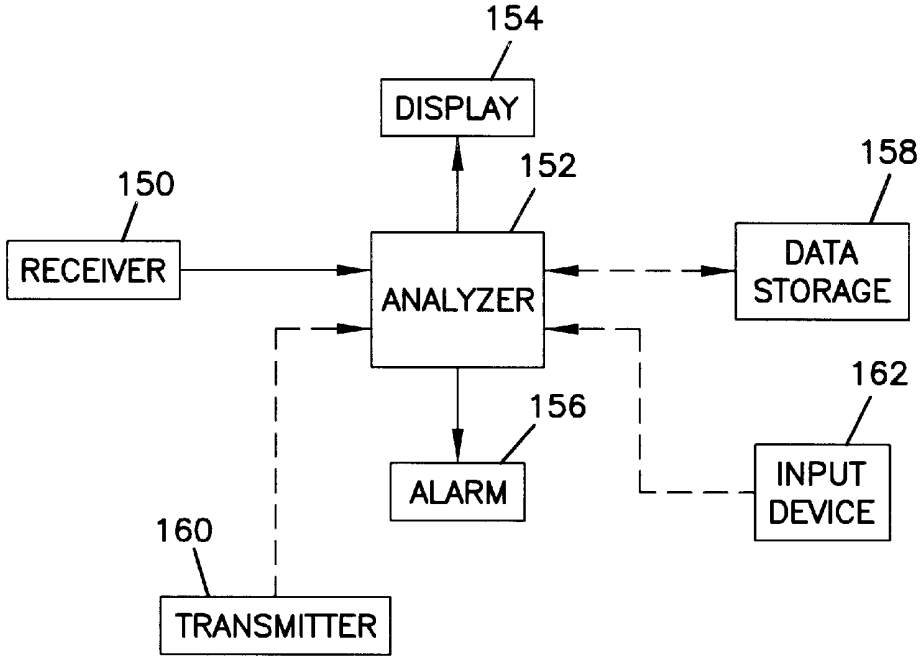
154
DISPLAY
152
158
150
RECEIVER
ANALYZER
DATA STORAGE
162
156
ALARM
INPUT DEVICE
160
TRANSMITTER

FIG. 23

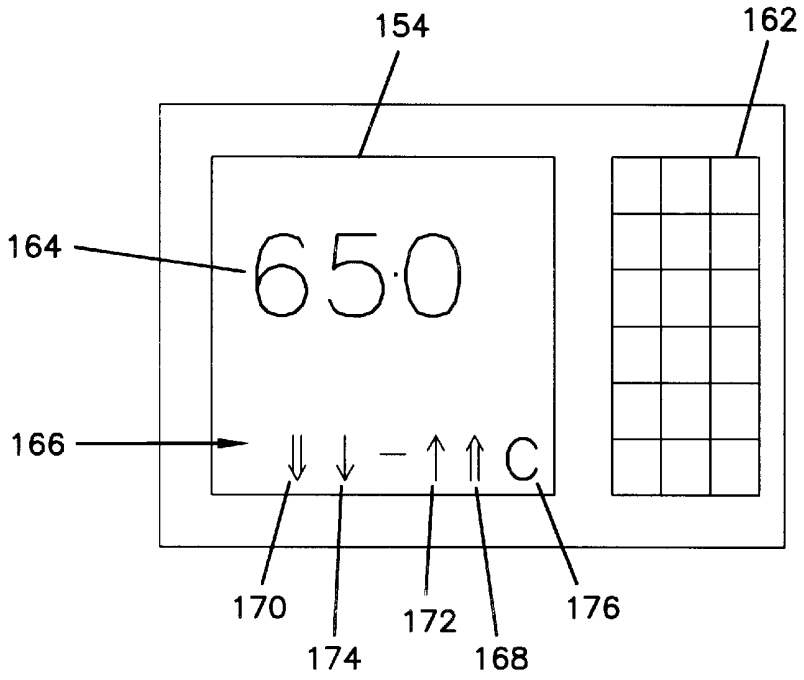

FIG. 24

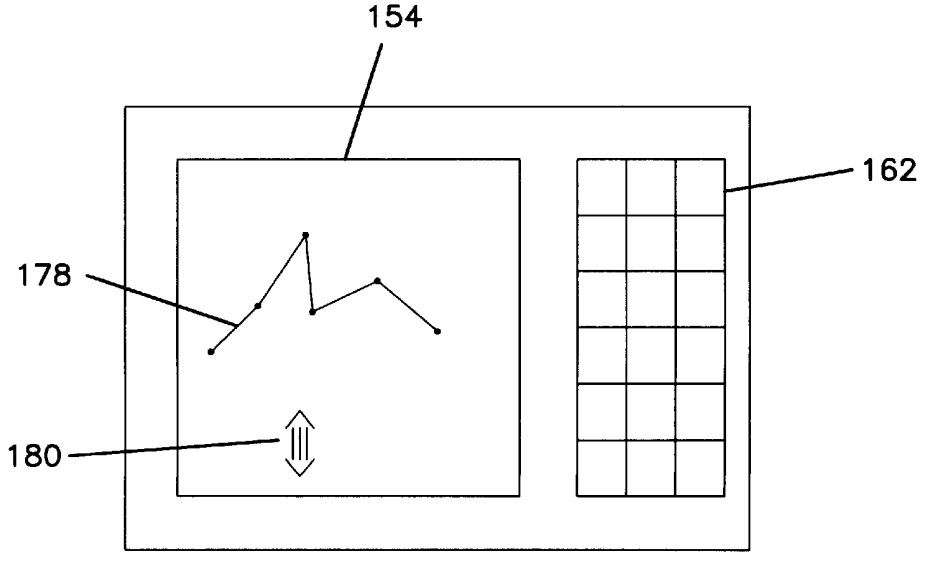

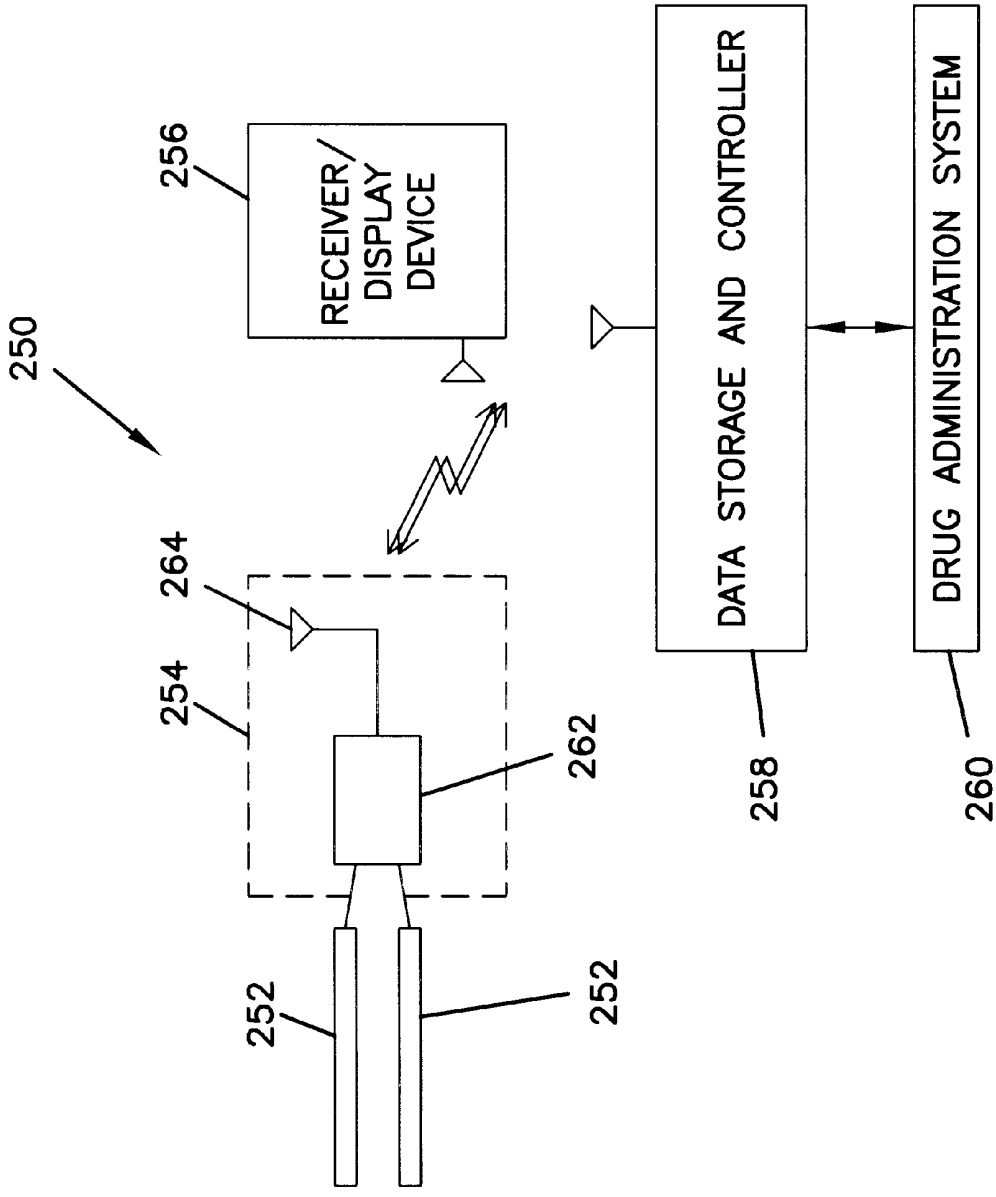
250
256
RECEIVER/
DISPLAY
DEVICE
264
254
262
252
252
DATA STORAGE AND CONTROLLER
DRUG ADMINISTRATION SYSTEM
258
260

FIG. 25

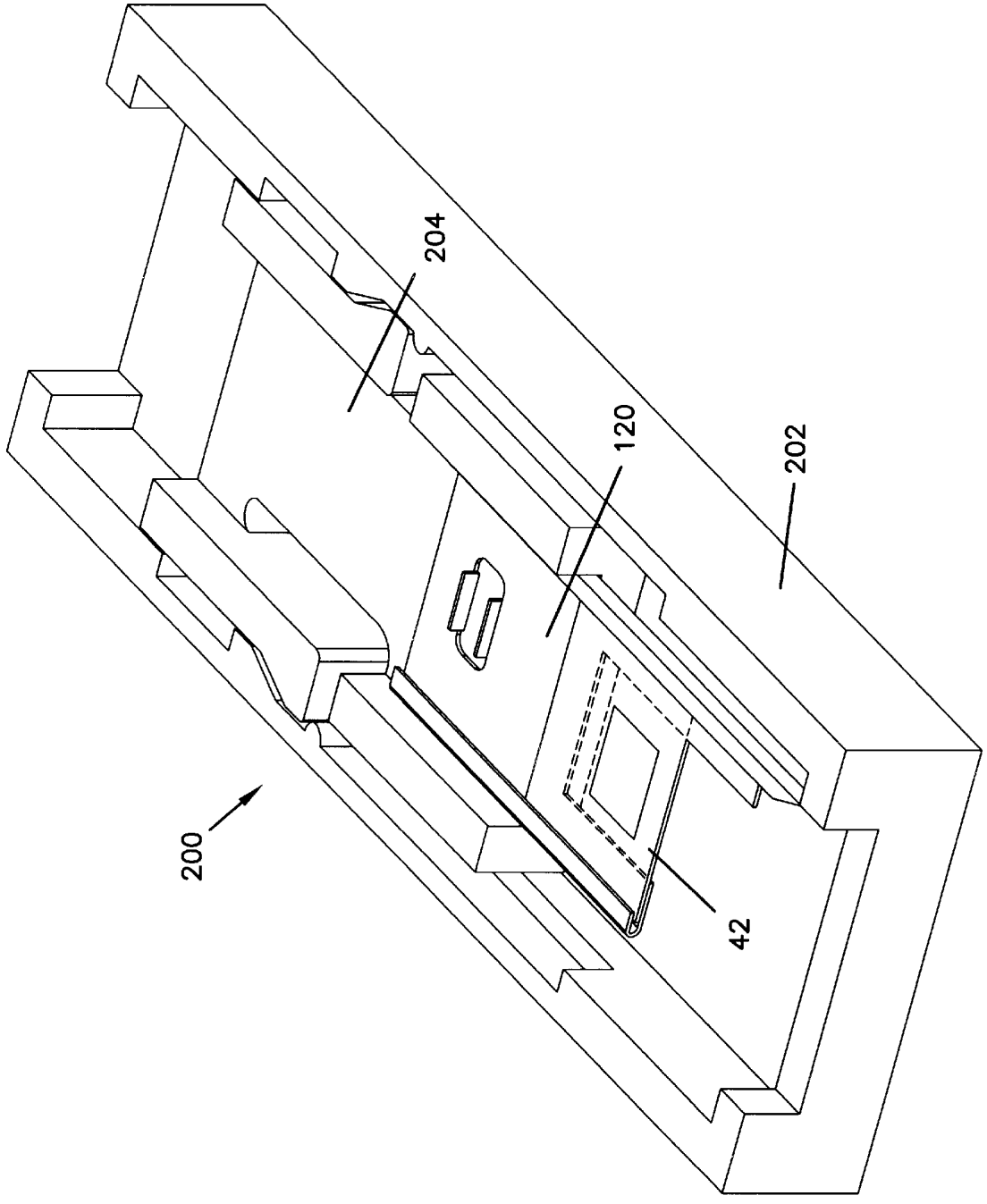

FIG. 26

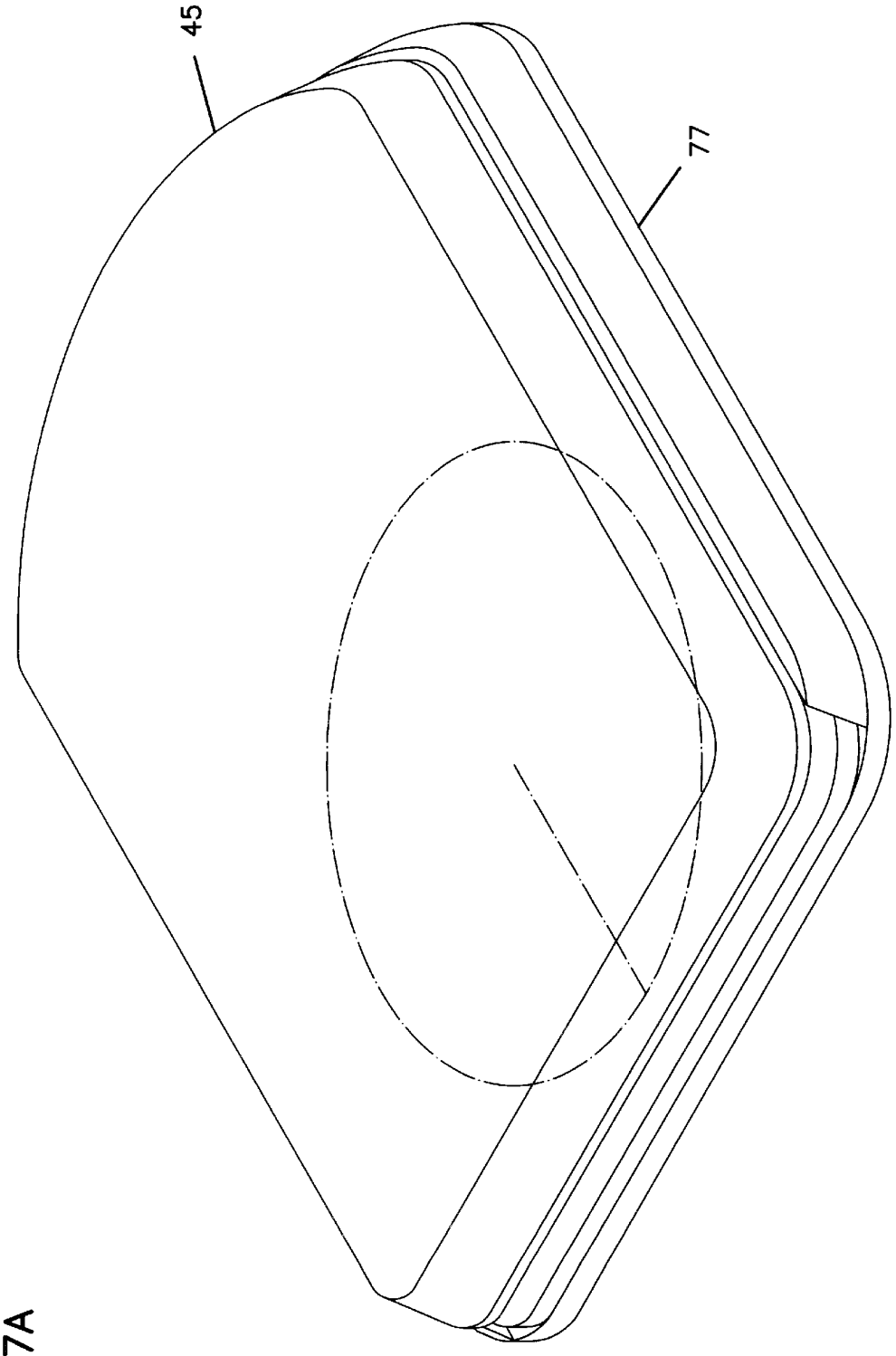

FIG. 27A

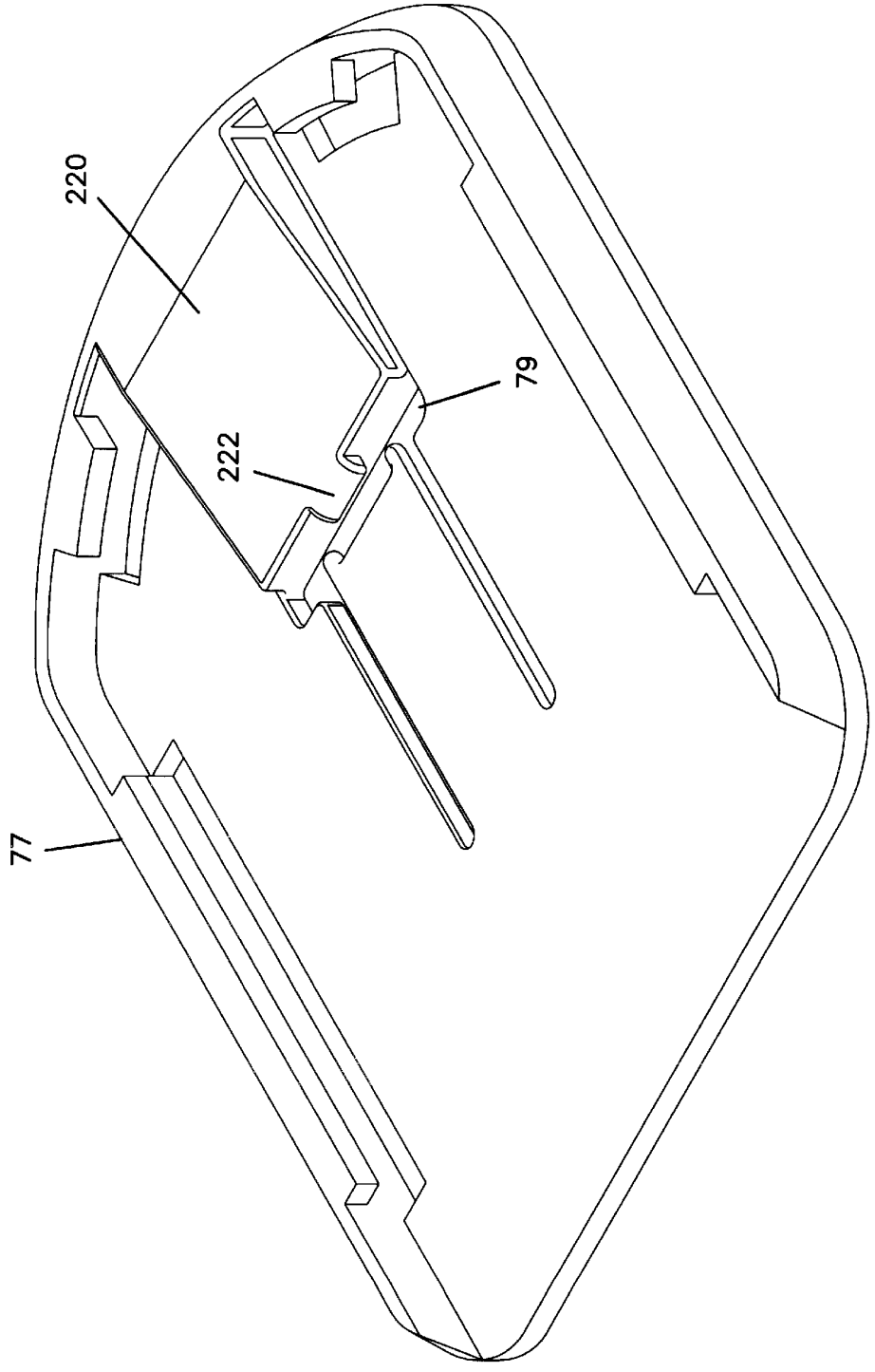

FIG. 27B

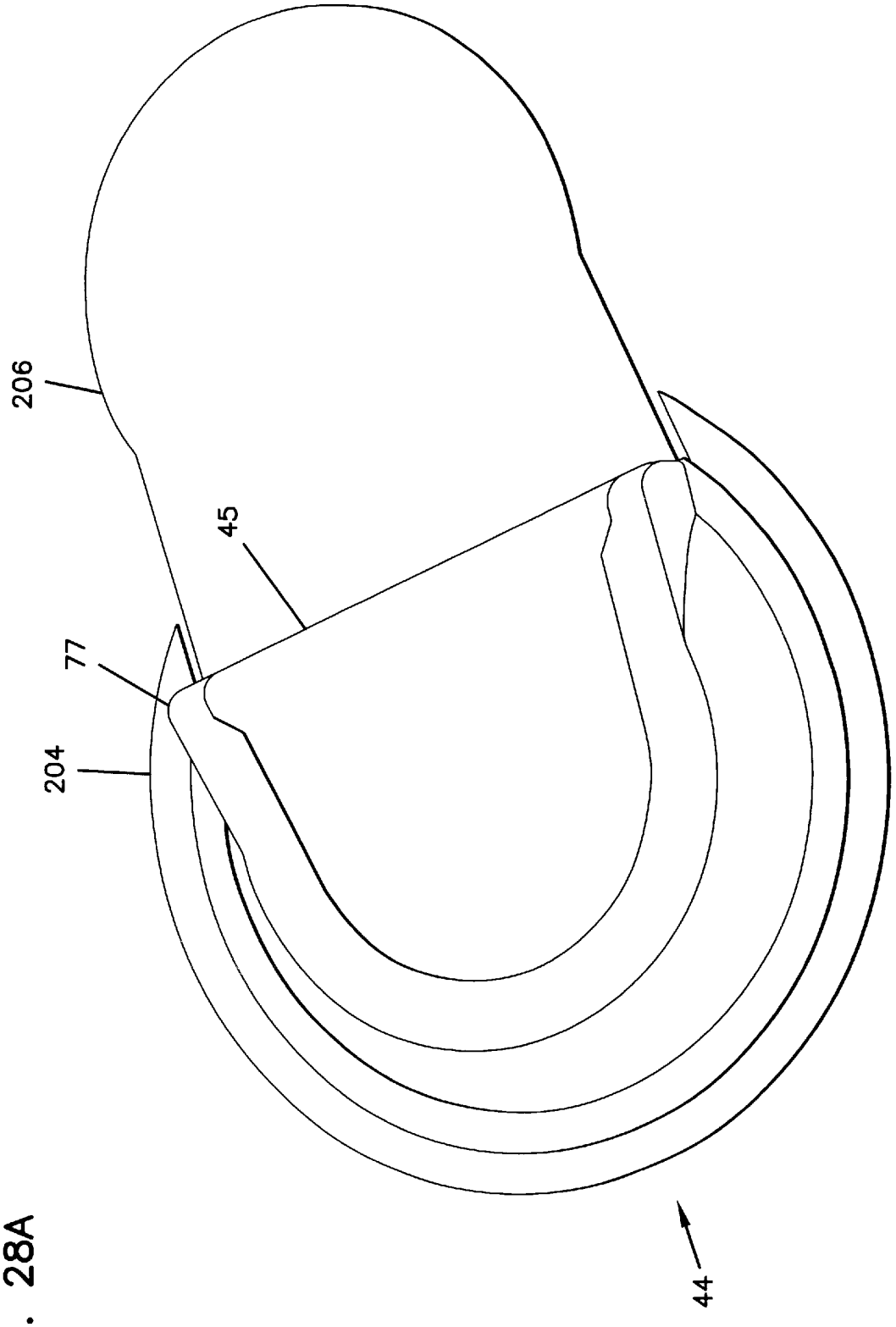

FIG. 28A

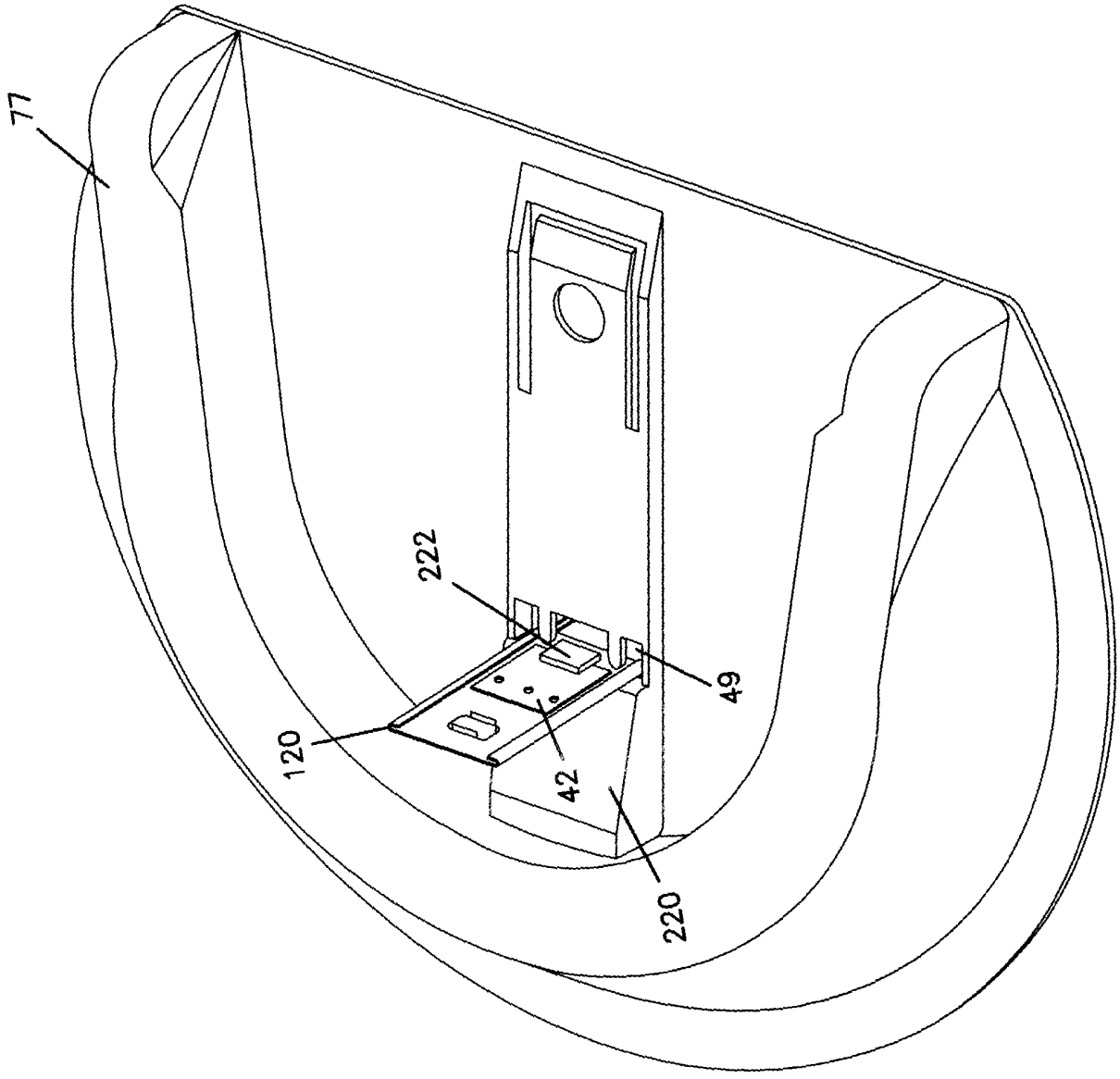

FIG. 28B

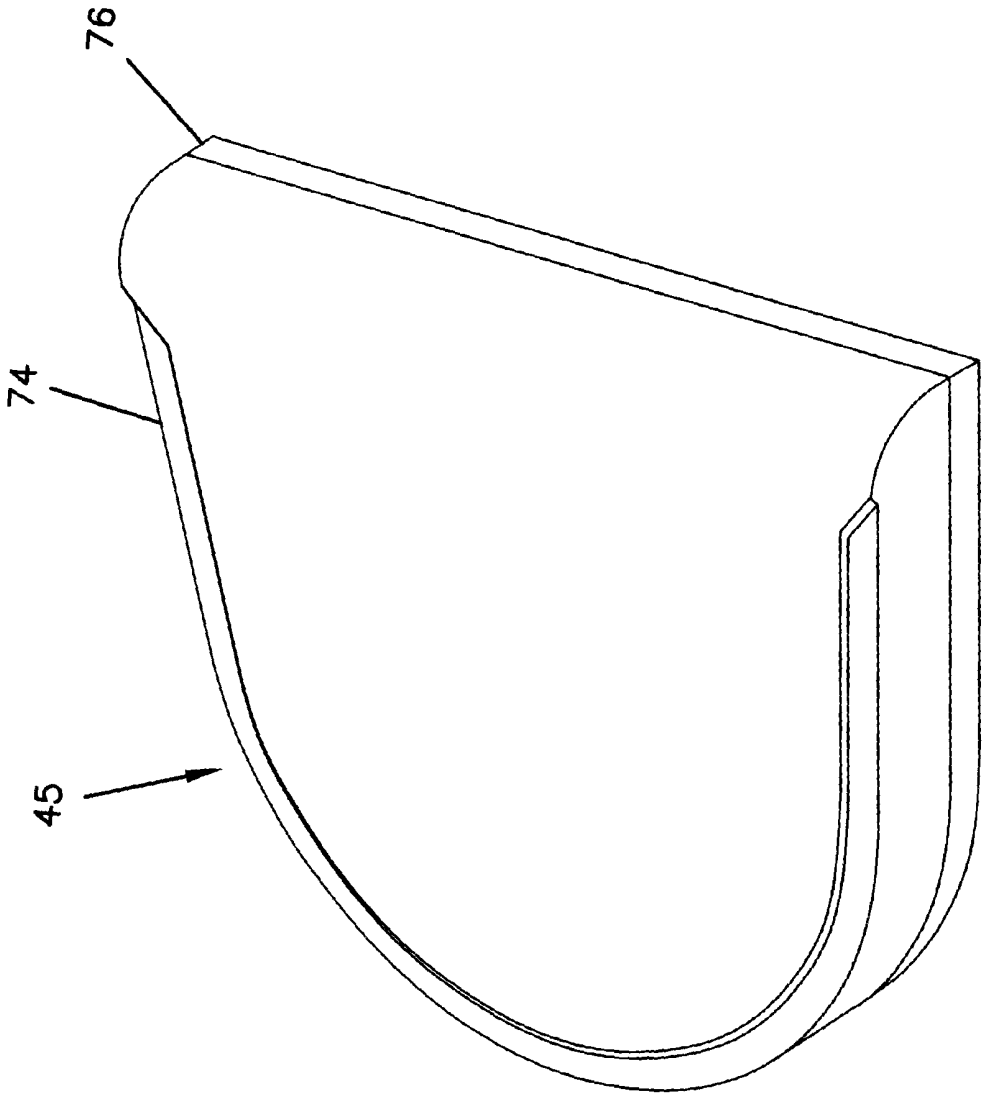

FIG. 28C

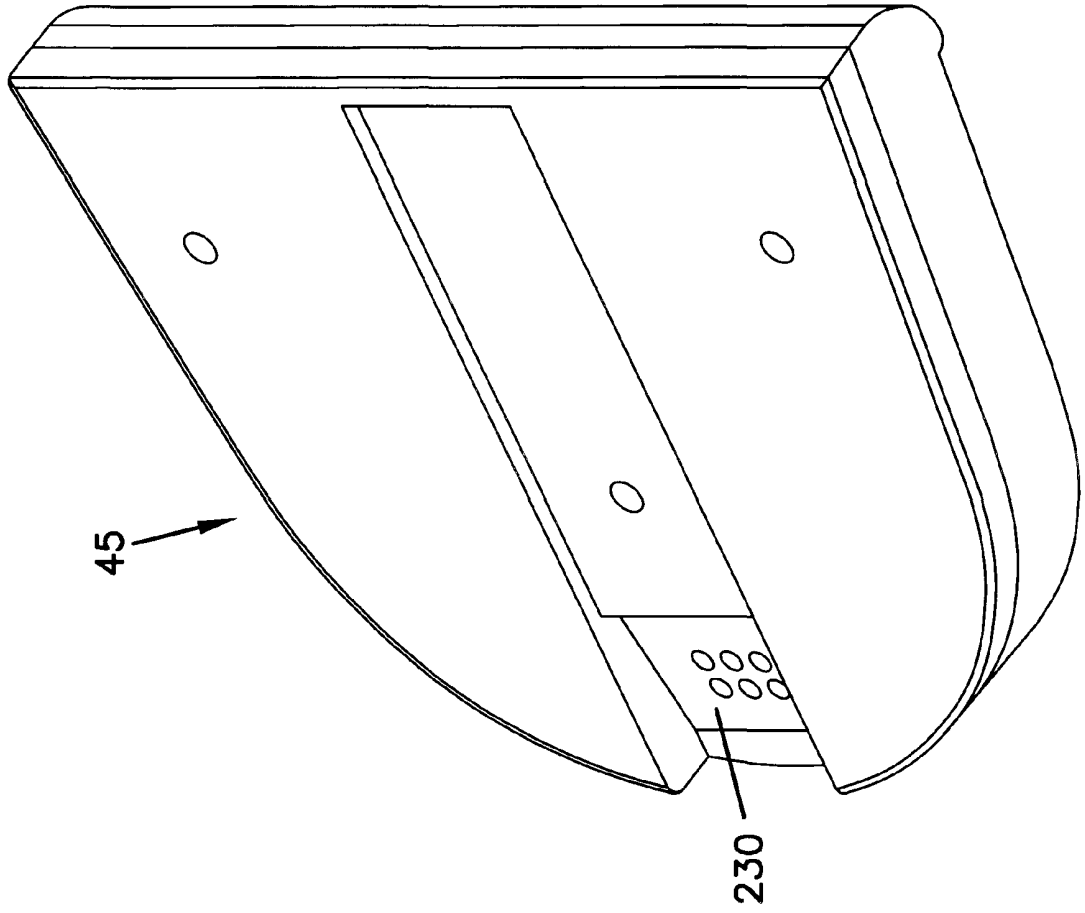

FIG. 28D

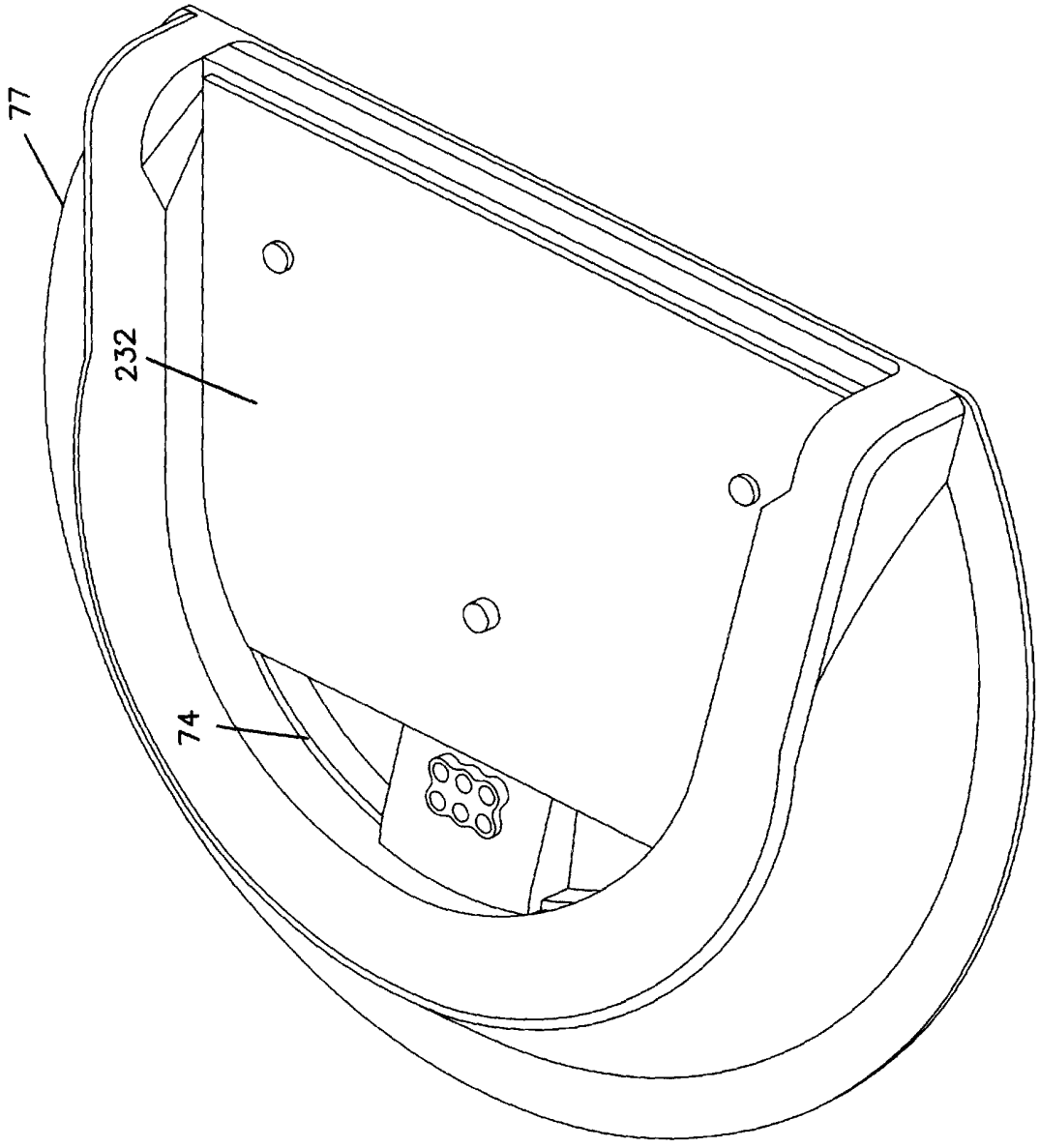

FIG. 28E

ANALYTE MONITORING DEVICE AND METHODS OF USE

FIELD OF THE INVENTION

The present invention is, in general, directed to devices and methods for the in vivo monitoring of an analyte, such as glucose or lactate. More particularly, the present invention relates to devices and methods for the in vivo monitoring of an analyte using an electrochemical sensor to provide information to a patient about the level of the analyte.

BACKGROUND OF THE INVENTION

The monitoring of the level of glucose or other analytes, such as lactate or oxygen, in certain individuals is vitally important to their health. High or low levels of glucose or other analytes may have detrimental effects. The monitoring of glucose is particularly important to individuals with diabetes, as they must determine when insulin is needed to reduce glucose levels in their bodies or when additional glucose is needed to raise the level of glucose in their bodies.

A conventional technique used by many diabetics for personally monitoring their blood glucose level includes the periodic drawing of blood, the application of that blood to a test strip, and the determination of the blood glucose level using calorimetric, electrochemical, or photometric detection. This technique does not permit continuous or automatic monitoring of glucose levels in the body, but typically must be performed manually on a periodic basis. Unfortunately, the consistency with which the level of glucose is checked varies widely among individuals. Many diabetics find the periodic testing inconvenient and they sometimes forget to test their glucose level or do not have time for a proper test. In addition, some individuals wish to avoid the pain associated with the test. These situations may result in hyperglycemic or hypoglycemic episodes. An in vivo glucose sensor that continuously or automatically monitors the individual's glucose level would enable individuals to more easily monitor their glucose, or other analyte, levels.

A variety of devices have been developed for continuous or automatic monitoring of analytes, such as glucose, in the blood stream or interstitial fluid. A number of these devices use electrochemical sensors which are directly implanted into a blood vessel or in the subcutaneous tissue of a patient. However, these devices are often difficult to reproducibly and inexpensively manufacture in large numbers. In addition, these devices are typically large, bulky, and/or inflexible, and many can not be used effectively outside of a controlled medical facility, such as a hospital or a doctor's office, unless the patient is restricted in his activities.

Some devices include a sensor guide which rests on or near the skin of the patient and may be attached to the patient to hold the sensor in place. These sensor guides are typically bulky and do not allow for freedom of movement. In addition, the sensor guides or the sensors include cables or wires for connecting the sensor to other equipment to direct the signals from the sensors to an analyzer. The size of the sensor guides and presence of cables and wires hinders the convenient use of these devices for everyday applications. There is a need for a small, compact device that can operate the sensor and provide signals to an analyzer without substantially restricting the movements and activities of a patient.

The patient's comfort and the range of activities that can be performed while the sensor is implanted are important considerations in designing extended-use sensors for continuous or automatic in vivo monitoring of the level of an analyte, such as glucose. There is a need for a small, comfortable device which can continuously monitor the level of an analyte, such as glucose, while still permitting the patient to engage in normal activities. Continuous and/or automatic monitoring of the analyte can provide a warning to the patient when the level of the analyte is at or near a threshold level. For example, if glucose is the analyte, then the monitoring device might be configured to warn the patient of current or impending hyperglycemia or hypoglycemia. The patient can then take appropriate actions.

SUMMARY OF THE INVENTION

Generally, the present invention relates to methods and devices for the continuous and/or automatic in vivo monitoring of the level of an analyte using a subcutaneously implantable sensor. Many of these devices are small and comfortable when used, thereby allowing a wide range of activities. One embodiment is a sensor control unit having a housing adapted for placement on skin. The housing is also adapted to receive a portion of an electrochemical sensor. The sensor control unit includes two or more conductive contacts disposed on the housing and configured for coupling to two or more contact pads on the sensor. A transmitter is disposed in the housing and coupled to the plurality of conductive contacts for transmitting data obtained using the sensor. The sensor control unit may also include a variety of optional components, such as, for example, adhesive for adhering to the skin, a mounting unit, a receiver, a processing circuit, a power supply (e.g., a battery), an alarm system, a data storage unit, a watchdog circuit, and a measurement circuit. Other optional components are described below.

Another embodiment of the invention is a sensor assembly that includes the sensor control unit described above. The sensor assembly also includes a sensor having at least one working electrode and at least one contact pad coupled to the working electrode or electrodes. The sensor may also include optional components, such as, for example, a counter electrode, a counter/reference electrode, a reference electrode, and a temperature probe. Other components and options for the sensor are described below.

A further embodiment of the invention is an analyte monitoring system that includes the sensor control unit described above. The analyte monitoring system also includes a sensor that has at least one working electrode and at least one contact pad coupled to the working electrode or electrodes. The analyte monitoring system also includes a display unit that has a receiver for receiving data from the sensor control unit and a display coupled to the receiver for displaying an indication of the level of an analyte. The display unit may optionally include a variety of components, such as, for example, a transmitter, an analyzer, a data storage unit, a watchdog circuit, an input device, a power supply, a clock, a lamp, a pager, a telephone interface, a computer interface, an alarm or alarm system, a radio, and a calibration unit. Further components and options for the display unit are described below. In addition, the analyte monitoring system or a component of the analyte monitoring system may optionally include a processor capable of determining a drug or treatment protocol and/or a drug delivery system.

Yet another embodiment of the invention is an insertion kit for inserting an electrochemical sensor into a patient. The insertion kit includes an inserter. A portion of the inserter has a sharp, rigid, planer structure adapted to support the sensor during insertion of the electrochemical sensor. The insertion kit also includes an insertion gun having a port configured to

accept the electrochemical sensor and the inserter. The insertion gun has a driving mechanism for driving the inserter and electrochemical sensor into the patient, and a retraction mechanism for removing the inserter while leaving the sensor within the patient.

Another embodiment is a method of using an electrochemical sensor. A mounting unit is adhered to skin of a patient. An insertion gun is aligned with a port on the mounting unit. The electrochemical sensor is disposed within the insertion gun and then the electrochemical sensor is inserted into the skin of the patient using the insertion gun. The insertion gun is removed and a housing of the sensor control unit is mounted on the mounting base. A plurality of conductive contacts disposed on the housing is coupled to a plurality of contact pads disposed on the electrochemical sensor to prepare the sensor for use.

One embodiment of the invention is a method for detecting failures in an implanted analyte-responsive sensor. An analyte-responsive sensor is implanted into a patient. The analyte-responsive sensor includes N working electrodes, where N is an integer and is two or greater, and a common counter electrode. Signals generated at one of the N working electrodes and at the common counter electrode are then obtained and the sensor is determined to have failed if the signal from the common counter electrode is not N times the signal from one of the working electrodes, within a predetermined threshold limit.

Yet another embodiment is a method of calibrating an electrochemical sensor having one or more working electrodes implanted in a patient. A signal is generated from each of the working electrodes. Several conditions are tested to determine if calibration is appropriate. First, the signals from each of the one or more working electrodes should differ by less than a first threshold amount. Second, the signals from each of the one or more working electrodes should be within a predetermined range. And, third, a rate of change of the signals from each of the one or more working electrodes should be less than a second threshold amount. A calibration value is found assaying a calibration sample of a patient's body fluid. The calibration value is then related to at least one of the signals from the one or more working electrodes if the conditions described above are met.

A further embodiment is a method for monitoring a level of an analyte. A sensor is inserted into a skin of a patient and a sensor control unit is attached to the skin of the patient. Two or more conductive contacts on the sensor control unit are coupled to contact pads on the sensor. Then, using the sensor control unit, data is collected regarding a level of an analyte from signals generated by the sensor. The collected data is transmitted to a display unit and an indication of the level of the analyte is displayed on the display unit.

The above summary of the present invention is not intended to describe each disclosed embodiment or every implementation of the present invention. The Figures and the detailed description which follow more particularly exemplify these embodiments.

BRIEF DESCRIPTION OF THE DRAWINGS

The invention may be more completely understood in consideration of the following detailed description of various embodiments of the invention in connection with the accompanying drawings, in which:

FIGS. **1**, **1**A, **1**B is a block diagram of one embodiment of a subcutaneous analyte monitor using a subcutaneously implantable analyte sensor, according to the invention;

FIG. **2** is a top view of one embodiment of an analyte sensor, according to the invention;

FIGS. **3**, **3**A is a cross-sectional view of the analyte sensor of FIG. **2**;

FIG. **3**B is a cross-sectional view of another embodiment of an analyte sensor, according to the invention;

FIG. **4**A is a cross-sectional view of a third embodiment of an analyte sensor, according to the invention;

FIG. **4**B is a cross-sectional view of a fourth embodiment of an analyte sensor, according to the invention;

FIGS. **5**A–**5**D is an expanded top view of a tip portion of the analyte sensor of FIG. **2**;

FIG. **6** is a cross-sectional view of a fifth embodiment of an analyte sensor, according to the invention;

FIG. **7** is an expanded top view of a tip-portion of the analyte sensor of FIG. **6**;

FIG. **8** is an expanded bottom view of a tip-portion of the analyte sensor of FIG. **6**;

FIG. **9** is a side view of the analyte sensor of FIG. **2**;

FIG. **10** is a top view of the analyte sensor of FIG. **6**;

FIG. **11** is a bottom view of the analyte sensor of FIG. **6**;

FIG. **12** is an expanded side view of one embodiment of a sensor and an insertion device, according to the invention;

FIGS. **13**A, **13**B, **13**C are cross-sectional views of three embodiments of the insertion device of FIG. **12**;

FIG. **14** is a cross-sectional view of one embodiment of a on-skin sensor control unit, according to the invention;

FIG. **15** is a top view of a base of the on-skin sensor control unit of FIG. **14**;

FIG. **16** is a bottom view of a cover of the on-skin sensor control unit of FIG. **14**;

FIG. **17** is a perspective view of the on-skin sensor control unit of FIG. **14** on the skin of a patient;

FIG. **18**A is a block diagram of one embodiment of an on-skin sensor control unit, according to the invention;

FIG. **18**B is a block diagram of another embodiment of an on-skin sensor control unit, according to the invention;

FIGS. **19**A, **19**B, **19**C, and **19**D are cross-sectional views of four embodiments of conductive contacts disposed on an interior surface of a housing of an on-skin sensor control unit, according to the invention;

FIGS. **19**E and **19**F are cross-sectional views of two embodiments of conductive contacts disposed on an exterior surface of a housing of an on-skin sensor control unit, according to the invention;

FIGS. **20**A and **20**B are schematic diagrams of two embodiments of a current-to-voltage converter for use in an analyte monitoring device, according to the invention;

FIG. **21** is a block diagram of one embodiment of an open loop modulation system for use in an analyte monitoring device, according to the invention;

FIG. **22** is a block diagram of one embodiment of a receiver/display unit, according to the invention;

FIG. **23** is a front view of one embodiment of a receiver/display unit;

FIG. **24** is a front view of a second embodiment of a receiver/display unit;

FIG. **25** is a block diagram of one embodiment of a drug delivery system, according to the invention;

FIG. **26** is a perspective view of the internal structure of an insertion gun, according to the invention;

FIG. **27**A is a top view of one embodiment of an on-skin sensor control unit, according to the invention;

FIG. **27**B is a top view of one embodiment of a mounting unit of the on-skin sensor control unit of FIG. **27**A;

FIG. **28**A is a top view of another embodiment of an on-skin sensor control unit after insertion of an insertion device and a sensor, according to the invention;

FIG. **28**B is a top view of one embodiment of a mounting unit of the on-skin sensor control unit of FIG. **28**A;

FIG. **28**C is a top view of one embodiment of a housing for at least a portion of the electronics of the on-skin sensor control unit of FIG. **28**A;

FIG. **28**D is a bottom view of the housing of FIG. **28**C; and

FIG. **28**E is a top view of the on-skin sensor control unit of FIG. **28**A with a cover of the housing removed.

While the invention is amenable to various modifications and alternative forms, specifics thereof have been shown by way of example in the drawings and will be described in detail. It should be understood, however, that the intention is not to limit the invention to the particular embodiments described. On the contrary, the intention is to cover all modifications, equivalents, and alternatives falling within the spirit and scope of the invention as defined by the appended claims.

DETAILED DESCRIPTION OF THE INVENTION

The present invention is applicable to an analyte monitoring system using an implantable sensor for the in vivo determination of a concentration of an analyte, such as glucose or lactate, in a fluid. The sensor can be, for example, subcutaneously implanted in a patient for the continuous or periodic monitoring an analyte in a patient's interstitial fluid. This can then be used to infer the glucose level in the patient's bloodstream. Other in vivo analyte sensors can be made, according to the invention, for insertion into a vein, artery, or other portion of the body containing fluid. The analyte monitoring system is typically configured for monitoring the level of the analyte over a time period which may range from days to weeks or longer.

The following definitions are provided for terms used herein:

A "counter electrode" refers to an electrode paired with the working electrode, through which passes a current equal in magnitude and opposite in sign to the current passing through the working electrode. In the context of the invention, the term "counter electrode" is meant to include counter electrodes which also function as reference electrodes (i.e., a counter/reference electrode).

An "electrochemical sensor" is a device configured to detect the presence and/or measure the level of an analyte in a sample via electrochemical oxidation and reduction reactions on the sensor. These reactions are transduced to an electrical signal that can be correlated to an amount, concentration, or level of an analyte in the sample.

"Electrolysis" is the electrooxidation or electroreduction of a compound either directly at an electrode or via one or more electron transfer agents.

A compound is "immobilized" on a surface when it is entrapped on or chemically bound to the surface.

A "non-leachable" or "non-releasable" compound or a compound that is "non-leachably disposed" is meant to define a compound that is affixed on the sensor such that it does not substantially diffuse away from the working surface of the working electrode for the period in which the sensor is used (e.g., the period in which the sensor is implanted in a patient or measuring a sample).

Components are "immobilized" within a sensor, for example, when the components are covalently, ionically, or coordinatively bound to constituents of the sensor and/or are entrapped in a polymeric or sol-gel matrix or membrane which precludes mobility.

An "electron transfer agent" is a compound that carries electrons between the analyte and the working electrode, either directly, or in cooperation with other electron transfer agents. One example of an electron transfer agent is a redox mediator.

A "working electrode" is an electrode at which the analyte (or a second compound whose level depends on the level of the analyte) is electrooxidized or electroreduced with or without the agency of an electron transfer agent.

A "working surface" is that portion of the working electrode which is coated with or is accessible to the electron transfer agent and configured for exposure to an analyte-containing fluid.

A "sensing layer" is a component of the sensor which includes constituents that facilitate the electrolysis of the analyte. The sensing layer may include constituents such as an electron transfer agent, a catalyst which catalyzes a reaction of the analyte to produce a response at the electrode, or both. In some embodiments of the sensor, the sensing layer is non-leachably disposed in proximity to or on the working electrode.

A "non-corroding" conductive material includes non-metallic materials, such as carbon and conductive polymers.

Analyte Sensor Systems

The analyte monitoring systems of the present invention can be utilized under a variety of conditions. The particular configuration of a sensor and other units used in the analyte monitoring system may depend on the use for which the analyte monitoring system is intended and the conditions under which the analyte monitoring system will operate. One embodiment of the analyte monitoring system includes a sensor configured for implantation into a patient or user. For example, implantation of the sensor may be made in the arterial or venous systems for direct testing of analyte levels in blood. Alternatively, a sensor may be implanted in the interstitial tissue for determining the analyte level in interstitial fluid. This level may be correlated and/or converted to analyte levels in blood or other fluids. The site and depth of implantation may affect the particular shape, components, and configuration of the sensor. Subcutaneous implantation may be preferred, in some cases, to limit the depth of implantation of the sensor. Sensors may also be implanted in other regions of the body to determine analyte levels in other fluids. Examples of suitable sensor for use in the analyte monitoring systems of the invention are described in U.S. patent application, Ser. No. 09/034,372, incorporated herein by reference.

One embodiment of the analyte monitoring system **40** for use with an implantable sensor **42**, and particularly for use with a subcutaneously implantable sensor, is illustrated in block diagram form in FIG. **1**. The analyte monitoring system **40** includes, at minimum, a sensor **42**, a portion of which is configured for implantation (e.g., subcutaneous, venous, or arterial implantation) into a patient, and a sensor control unit **44**. The sensor **42** is coupled to the sensor control unit **44** which is typically attached to the skin of a patient. The sensor control unit **44** operates the sensor **42**, including, for example, providing a voltage across the electrodes of the sensor **42** and collecting signals from the sensor **42**. The sensor control unit **44** may evaluate the signals from the sensor **42** and/or transmit the signals to one or more optional receiver/display units **46**, **48** for evaluation. The sensor control unit **44** and/or the receiver/display units

46, 48 may display or otherwise communicate the current level of the analyte. Furthermore, the sensor control unit 44 and/or the receiver/display units 46, 48 may indicate to the patient, via, for example, an audible, visual, or other sensory-stimulating alarm, when the level of the analyte is at or near a threshold level. In some embodiments, a electrical shock can be delivered to the patient as a warning through one of the electrodes or the optional temperature probe of the sensor. For example, if glucose is monitored then an alarm may be used to alert the patient to a hypoglycemic or hyperglycemic glucose level and/or to impending hypoglycemia or hyperglycemia.

The Sensor

A sensor 42 includes at least one working electrode 58 formed on a substrate 50, as shown in FIG. 2. The sensor 42 may also include at least one counter electrode 60 (or counter/reference electrode) and/or at least one reference electrode 62 (see FIG. 8). The counter electrode 60 and/or reference electrode 62 may be formed on the substrate 50 or may be separate units. For example, the counter electrode and/or reference electrode may be formed on a second substrate which is also implanted in the patient or, for some embodiments of the implantable sensors, the counter electrode and/or reference electrode may be placed on the skin of the patient with the working electrode or electrodes being implanted into the patient. The use of an on-the-skin counter and/or reference electrode with an implantable working electrode is described in U.S. Pat. No. 5,593, 852, incorporated herein by reference.

The working electrode or electrodes 58 are formed using conductive traces 52 disposed on the substrate 50. The counter electrode 60 and/or reference electrode 62, as well as other optional portions of the sensor 42, such as a temperature probe 66 (see FIG. 8), may also be formed using conductive traces 52 disposed on the substrate 50. These conductive traces 52 may be formed over a smooth surface of the substrate 50 or within channels 54 formed by, for example, embossing, indenting or otherwise creating a depression in the substrate 50.

A sensing layer 64 (see FIGS. 3A and 3B) is often formed proximate to or on at least one of the working electrodes 58 to facilitate the electrochemical detection of the analyte and the determination of its level in the sample fluid, particularly if the analyte can not be electrolyzed at a desired rate and/or with a desired specificity on a bare electrode. The sensing layer 64 may include an electron transfer agent to transfer electrons directly or indirectly between the analyte and the working electrode 58. The sensing layer 64 may also contain a catalyst to catalyze a reaction of the analyte. The components of the sensing layer may be in a fluid or gel that is proximate to or in contact with the working electrode 58. Alternatively, the components of the sensing layer 64 may be disposed in a polymeric or sol-gel matrix that is proximate to or on the working electrode 58. Preferably, the components of the sensing layer 64 are non-leachably disposed within the sensor 42. More preferably, the components of the sensor 42 are immobilized within the sensor 42.

In addition to the electrodes 58, 60, 62 and the sensing layer 64, the sensor 42 may also include a temperature probe 66 (see FIGS. 6 and 8), a mass transport limiting layer 74 (see FIG. 9), a biocompatible layer 75 (see FIG. 9), and/or other optional components, as described below. Each of these items enhances the functioning of and/or results from the sensor 42, as discussed below.

The Substrate

The substrate 50 may be formed using a variety of non-conducting materials, including, for example, polymeric or plastic materials and ceramic materials. Suitable materials for a particular sensor 42 may be determined, at least in part, based on the desired use of the sensor 42 and properties of the materials.

In some embodiments, the substrate is flexible. For example, if the sensor 42 is configured for implantation into a patient, then the sensor 42 may be made flexible (although rigid sensors may also be used for implantable sensors) to reduce pain to the patient and damage to the tissue caused by the implantation of and/or the wearing of the sensor 42. A flexible substrate 50 often increases the patient's comfort and allows a wider range of activities. Suitable materials for a flexible substrate 50 include, for example, non-conducting plastic or polymeric materials and other non-conducting, flexible, deformable materials. Examples of useful plastic or polymeric materials include thermoplastics such as polycarbonates, polyesters (e.g., Mylar™ and polyethylene terephthalate (PET)), polyvinyl chloride (PVC), polyurethanes, polyethers, polyamides, polyimides, or copolymers of these thermoplastics, such as PETG (glycol-modified polyethylene terephthalate).

In other embodiments, the sensors 42 are made using a relatively rigid substrate 50 to, for example, provide structural support against bending or breaking. Examples of rigid materials that may be used as the substrate 50 include poorly conducting ceramics, such as aluminum oxide and silicon dioxide. One advantage of an implantable sensor 42 having a rigid substrate is that the sensor 42 may have a sharp point and/or a sharp edge to aid in implantation of a sensor 42 without an additional insertion device.

It will be appreciated that for many sensors 42 and sensor applications, both rigid and flexible sensors will operate adequately. The flexibility of the sensor 42 may also be controlled and varied along a continuum by changing, for example, the composition and/or thickness of the substrate 50.

In addition to considerations regarding flexibility, it is often desirable that implantable sensors 42 should have a substrate 50 which is non-toxic. Preferably, the substrate 50 is approved by one or more appropriate governmental agencies or private groups for in vivo use.

The sensor 42 may include optional features to facilitate insertion of an implantable sensor 42, as shown in FIG. 12. For example, the sensor 42 may be pointed at the tip 123 to ease insertion. In addition, the sensor 42 may include a barb 125 which assists in anchoring the sensor 42 within the tissue of the patient during operation of the sensor 42. However, the barb 125 is typically small enough that little damage is caused to the subcutaneous tissue when the sensor 42 is removed for replacement.

Although the substrate 50 in at least some embodiments has uniform dimensions along the entire length of the sensor 42, in other embodiments, the substrate 50 has a distal end 67 and a proximal end 65 with different widths 53, 55, respectively, as illustrated in FIG. 2. In these embodiments, the distal end 67 of the substrate 50 may have a relatively narrow width 53. For sensors 42 which are implantable into the subcutaneous tissue or another portion of a patient's body, the narrow width 53 of the distal end 67 of the substrate 50 may facilitate the implantation of the sensor 42. Often, the narrower the width of the sensor 42, the less pain the patient will feel during implantation of the sensor and afterwards.

For subcutaneously implantable sensors 42 which are designed for continuous or periodic monitoring of the analyte during normal activities of the patient, a distal end 67 of the sensor 42 which is to be implanted into the patient has

a width **53** of 2 mm or less, preferably 1 mm or less, and more preferably 0.5 mm or less. If the sensor **42** does not have regions of different widths, then the sensor **42** will typically have an overall width of, for example, 2 mm, 1.5 mm, 1 mm, 0.5 mm, 0.25 mm, or less. However, wider or narrower sensors may be used. In particular, wider implantable sensors may be used for insertion into veins or arteries or when the movement of the patient is limited, for example, when the patient is confined in bed or in a hospital.

Returning to FIG. **2**, the proximal end **65** of the sensor **42** may have a width **55** larger than the distal end **67** to facilitate the connection between contact pads **49** of the electrodes and contacts on a control unit. The wider the sensor **42** at this point, the larger the contact pads **49** can be made. This may reduce the precision needed to properly connect the sensor **42** to contacts on the control unit (e.g., sensor control unit **44** of FIG. **1**). However, the maximum width of the sensor **42** may be constrained so that the sensor **42** remains small for the convenience and comfort of the patient and/or to fit the desired size of the analyte monitor. For example, the proximal end **65** of a subcutaneously implantable sensor **42**, such as the sensor **42** illustrated in FIG. **1**, may have a width **55** ranging from 0.5 mm to 15 mm, preferably from 1 mm to 10 mm, and more preferably from 3 mm to 7 mm. However, wider or narrower sensors may be used in this and other in vivo applications.

The thickness of the substrate **50** may be determined by the mechanical properties of the substrate material (e.g., the strength, modulus, and/or flexibility of the material), the desired use of the sensor **42** including stresses on the substrate **50** arising from that use, as well as the depth of any channels or indentations formed in the substrate **50**, as discussed below. Typically, the substrate **50** of a subcutaneously implantable sensor **42** for continuous or periodic monitoring of the level of an analyte while the patient engages in normal activities has a thickness of 50 to 500 μm and preferably 100 to 300 μm. However, thicker and thinner substrates **50** may be used, particularly in other types of in vivo sensors **42**.

The length of the sensor **42** may have a wide range of values depending on a variety of factors. Factors which influence the length of an implantable sensor **42** may include the depth of implantation into the patient and the ability of the patient to manipulate a small flexible sensor **42** and make connections between the sensor **42** and the sensor control unit **44**. A subcutaneously implantable sensor **42** for the analyte monitor illustrated in FIG. **1** may have a length ranging from 0.3 to 5 cm, however, longer or shorter sensors may be used. The length of the narrow portion of the sensor **42** (e.g., the portion which is subcutaneously inserted into the patient), if the sensor **42** has narrow and wide portions, is typically about 0.25 to 2 cm in length. However, longer and shorter portions may be used. All or only a part of this narrow portion may be subcutaneously implanted into the patient. The lengths of other implantable sensors **42** will vary depending, at least in part, on the portion of the patient into which the sensor **42** is to be implanted or inserted.

Conductive Traces

At least one conductive trace **52** is formed on the substrate for use in constructing a working electrode **58**. In addition, other conductive traces **52** may be formed on the substrate **50** for use as electrodes (e.g., additional working electrodes, as well as counter, counter/reference, and/or reference electrodes) and other components, such as a temperature probe. The conductive traces **52** may extend most of the distance along a length **57** of the sensor **50**, as illustrated in FIG. **2**, although this is not necessary. The placement of the conductive traces **52** may depend on the particular configuration of the analyte monitoring system (e.g., the placement of control unit contacts and/or the sample chamber in relation to the sensor **42**). For implantable sensors, particularly subcutaneously implantable sensors, the conductive traces typically extend close to the tip of the sensor **42** to minimize the amount of the sensor that must be implanted.

The conductive traces **52** may be formed on the substrate **50** by a variety of techniques, including, for example, photolithography, screen printing, or other impact or non-impact printing techniques. The conductive traces **52** may also be formed by carbonizing conductive traces **52** in an organic (e.g., polymeric or plastic) substrate **50** using a laser. A description of some exemplary methods for forming the sensor **42** is provided in U.S. patent application Ser. No. 09/034,422, incorporated herein by reference.

Another method for disposing the conductive traces **52** on the substrate **50** includes the formation of recessed channels **54** in one or more surfaces of the substrate **50** and the subsequent filling of these recessed channels **54** with a conductive material **56**, as shown in FIG. **3**A. The recessed channels **54** may be formed by indenting, embossing, or otherwise creating a depression in the surface of the substrate **50**. Exemplary methods for forming channels and electrodes in a surface of a substrate can be found in U.S. patent application Ser. No. 09/034,422. The depth of the channels is typically related to the thickness of the substrate **50**. In one embodiment, the channels have depths in the range of about 12.5 to 75 μm (0.5 to 3 mils), and preferably about 25 to 50 μm (1 to 2 mils).

The conductive traces are typically formed using a conductive material **56** such as carbon (e.g., graphite), a conductive polymer, a metal or alloy (e.g., gold or gold alloy), or a metallic compound (e.g., ruthenium dioxide or titanium dioxide). The formation of films of carbon, conductive polymer, metal, alloy, or metallic compound are well-known and include, for example, chemical vapor deposition (CVD), physical vapor deposition, sputtering, reactive sputtering, printing, coating, and painting. The conductive material **56** which fills the channels **54** is often formed using a precursor material, such as a conductive ink or paste. In these embodiments, the conductive material **56** is deposited on the substrate **50** using methods such as coating, painting, or applying the material using a spreading instrument, such as a coating blade. Excess conductive material between the channels **54** is then removed by, for example, running a blade along the substrate surface.

In one embodiment, the conductive material **56** is a part of a precursor material, such as a conductive ink, obtainable, for example, from Ercon, Inc. (Wareham, Mass.), Metech, Inc. (Elverson, Pa.), E.I. du Pont de Nemours and Co. (Wilmington, Del.), Emca-Remex Products (Montgomeryville, Pa.), or MCA Services (Melbourn, Great Britain). The conductive ink is typically applied as a semi-liquid or paste which contains particles of the carbon, metal, alloy, or metallic compound and a solvent or dispersant. After application of the conductive ink on the substrate **50** (e.g., in the channels **54**), the solvent or dispersant evaporates to leave behind a solid mass of conductive material **56**.

In addition to the particles of carbon, metal, alloy, or metallic compound, the conductive ink may also contain a binder. The binder may optionally be cured to further bind the conductive material **56** within the channel **54** and/or on the substrate **50**. Curing the binder increases the conductivity of the conductive material **56**. However, this is typically not necessary as the currents carried by the conductive material **56** within the conductive traces **52** are often rela-

tively low (usually less than 1 μA and often less than 100 nA). Typical binders include, for example, polyurethane resins, cellulose derivatives, elastomers, and highly fluorinated polymers. Examples of elastomers include silicones, polymeric dienes, and acrylonitrile-butadiene-styrene (ABS) resins. One example of a fluorinated polymer binder is Teflon® (DuPont, Wilmington, Del.). These binders are cured using, for example, heat or light, including ultraviolet (UV) light. The appropriate curing method typically depends on the particular binder which is used.

Often, when a liquid or semiliquid precursor of the conductive material **56** (e.g., a conductive ink) is deposited in the channel **54**, the precursor fills the channel **54**. However, when the solvent or dispersant evaporates, the conductive material **56** which remains may lose volume such that the conductive material **56** may or may not continue to fill the channel **54**. Preferred conductive materials **56** do not pull away from the substrate **50** as they lose volume, but rather decrease in height within the channel **54**. These conductive materials **56** typically adhere well to the substrate **50** and therefore do not pull away from the substrate **50** during evaporation of the solvent or dispersant. Other suitable conductive materials **56** either adhere to at least a portion of the substrate **50** and/or contain another additive, such as a binder, which adheres the conductive material **56** to the substrate **50**. Preferably, the conductive material **56** in the channels **54** is non-leachable, and more preferably immobilized on the substrate **50**. In some embodiments, the conductive material **56** may be formed by multiple applications of a liquid or semiliquid precursor interspersed with removal of the solvent or dispersant.

In another embodiment, the channels **54** are formed using a laser. The laser carbonizes the polymer or plastic material. The carbon formed in this process is used as the conductive material **56**. Additional conductive material **56**, such as a conductive carbon ink, may be used to supplement the carbon formed by the laser.

In a further embodiment, the conductive traces **52** are formed by pad printing techniques. For example, a film of conductive material is formed either as a continuous film or as a coating layer deposited on a carrier film. This film of conductive material is brought between a print head and the substrate **50**. A pattern on the surface of the substrate **50** is made using the print head according to a desired pattern of conductive traces **52**. The conductive material is transferred by pressure and/or heat from the film of conductive material to the substrate **50**. This technique often produces channels (e.g., depressions caused by the print head) in the substrate **50**. Alternatively, the conductive material is deposited on the surface of the substrate **50** without forming substantial depressions.

In other embodiments, the conductive traces **52** are formed by non-impact printing techniques. Such techniques include electrophotography and magnetography. In these processes, an image of the conductive traces **52** is electrically or magnetically formed on a drum. A laser or LED may be used to electrically form an image. A magnetic recording head may be used to magnetically form an image. A toner material (e.g., a conductive material, such as a conductive ink) is then attracted to portions of the drum according to the image. The toner material is then applied to the substrate by contact between the drum and the substrate. For example, the substrate may be rolled over the drum. The toner material may then be dried and/or a binder in the toner material may be cured to adhere the toner material to the substrate.

Another non-impact printing technique includes ejecting droplets of conductive material onto the substrate in a desired pattern. Examples of this technique include ink jet printing and piezo jet printing. An image is sent to the printer which then ejects the conductive material (e.g., a conductive ink) according to the pattern. The printer may provide a continuous stream of conductive material or the printer may eject the conductive material in discrete amounts at the desired points.

Yet another non-impact printing embodiment of forming the conductive traces includes an ionographic process. In the this process, a curable, liquid precursor, such as a photopolymerizable acrylic resin (e.g., Solimer 7501 from Cubital, Bad Kreuznach, Germany) is deposited over a surface of a substrate **50**. A photomask having a positive or negative image of the conductive traces **52** is then used to cure the liquid precursor. Light (e.g., visible or ultraviolet light) is directed through the photomask to cure the liquid precursor and form a solid layer over the substrate according to the image on the photomask. Uncured liquid precursor is removed leaving behind channels **54** in the solid layer. These channels **54** can then be filled with conductive material **56** to form conductive traces **52**.

Conductive traces **52** (and channels **54**, if used) can be formed with relatively narrow widths, for example, in the range of 25 to 250 μm, and including widths of, for example, 250 μm, 150 μm, 100 μm, 75 μm, 50 μm, 25 μm or less by the methods described above. In embodiments with two or more conductive traces **52** on the same side of the substrate **50**, the conductive traces **52** are separated by distances sufficient to prevent conduction between the conductive traces **52**. The edge-to-edge distance between the conductive traces is preferably in the range of 25 to 250 μm and may be, for example, 150 μm, 100 μm, 75 μm, 50 μm, or less. The density of the conductive traces **52** on the substrate **50** is preferably in the range of about 150 to 700 μm/trace and may be as small as 667 μm/trace or less, 333 μm/trace or less, or even 167 μm/trace or less.

The working electrode **58** and the counter electrode **60** (if a separate reference electrode is used) are often made using a conductive material **56**, such as carbon. Suitable carbon conductive inks are available from Ercon, Inc. (Wareham, Mass.), Metech, Inc. (Elverson, Pa.), E.I. du Pont de Nemours and Co. (Wilmington, Del.), Emca-Remex Products (Montgomeryville, Pa.), or MCA Services (Melbourn, Great Britain). Typically, the working surface **51** of the working electrode **58** is at least a portion of the conductive trace **52** that is in contact with the analyte-containing fluid (e.g., implanted in the patient).

The reference electrode **62** and/or counter/reference electrode are typically formed using conductive material **56** that is a suitable reference material, for example silver/silver chloride or a non-leachable redox couple bound to a conductive material, for example, a carbon-bound redox couple. Suitable silver/silver chloride conductive inks are available from Ercon, Inc. (Wareham, Mass.), Metech, Inc. (Elverson, Pa.), E.I. du Pont de Nemours and Co. (Wilmington, Del.), Emca-Remex Products (Montgomeryville, Pa.), or MCA Services (Melbourn, Great Britain). Silver/silver chloride electrodes illustrate a type of reference electrode that involves the reaction of a metal electrode with a constituent of the sample or body fluid, in this case, Cl^-.

Suitable redox couples for binding to the conductive material of the reference electrode include, for example, redox polymers (e.g., polymers having multiple redox centers.) It is preferred that the reference electrode surface be non-corroding so that an erroneous potential is not measured. Preferred conductive materials include less corrosive metals, such as gold and palladium. Most preferred

are non-corrosive materials including non-metallic conductors, such as carbon and conducting polymers. A redox polymer can be adsorbed on or covalently bound to the conductive material of the reference electrode, such as a carbon surface of a conductive trace **52**. Non-polymeric redox couples can be similarly bound to carbon or gold surfaces.

A variety of methods may be used to immobilize a redox polymer on an electrode surface. One method is adsorptive immobilization. This method is particularly useful for redox polymers with relatively high molecular weights. The molecular weight of a polymer may be increased, for example, by cross-linking.

Another method for immobilizing the redox polymer includes the functionalization of the electrode surface and then the chemical bonding, often covalently, of the redox polymer to the functional groups on the electrode surface. One example of this type of immobilization begins with a poly(4-vinylpyridine). The polymer's pyridine rings are, in part, complexed with a reducible/oxidizable species, such as $[Os(bpy)_2Cl]^{+/2+}$ where bpy is 2,2'-bipyridine. Part of the pyridine rings are quaternized by reaction with 2-bromoethylamine. The polymer is then crosslinked, for example, using a diepoxide, such as polyethylene glycol diglycidyl ether.

Carbon surfaces can be modified for attachment of a redox species or polymer, for example, by electroreduction of a diazonium salt. As an illustration, reduction of a diazonium salt formed upon diazotization of p-aminobenzoic acid modifies a carbon surface with phenylcarboxylic acid functional groups. These functional groups can then be activated by a carbodiimide, such as 1-ethyl-3-(3-dimethylaminopropyl)-carbodiimide hydrochloride. The activated functional groups are then bound with a amine-functionalized redox couple, such as the quaternized osmium-containing redox polymer described above or 2-aminoethylferrocene, to form the redox couple.

Similarly, gold can be functionalized by an amine, such as cystamine,. A redox couple such as $[Os(bpy)_2(\text{pyridine-4-carboxylate})Cl]^{0/+}$ is activated by 1-ethyl-3-(3-dimethylaminopropyl)-carbodiimide hydrochloride to form a reactive O-acylisourea which reacts with the gold-bound amine to form an amide.

In one embodiment, in addition to using the conductive traces **52** as electrodes or probe leads, two or more of the conductive traces **52** on the substrate **50** are used to give the patient a mild electrical shock when, for example, the analyte level exceeds a threshold level. This shock may act as a warning or alarm to the patient to initiate some action to restore the appropriate level of the analyte.

The mild electrical shock is produced by applying a potential between any two conductive traces **52** that are not otherwise connected by a conductive path. For example, two of the electrodes **58**, **60**, **62** or one electrode **58**, **60**, **62** and the temperature probe **66** may be used to provide the mild shock. Preferably, the working electrode **58** and the reference electrode **62** are not used for this purpose as this may cause some damage to the chemical components on or proximate to the particular electrode (e.g., the sensing layer on the working electrode or the redox couple on the reference electrode).

The current used to produce the mild shock is typically 0.1 to 1 mA. Higher or lower currents may be used, although care should be taken to avoid harm to the patient. The potential between the conductive traces is typically 1 to 10 volts. However, higher or lower voltages may be used depending, for example, on the resistance of the conductive traces **52**, the distance between the conductive traces **52** and the desired amount of current. When the mild shock is delivered, potentials at the working electrode **58** and across the temperature probe **66** may be removed to prevent harm to those components caused by unwanted conduction between the working electrode **58** (and/or temperature probe **66**, if used) and the conductive traces **52** which provide the mild shock.

Contact Pads

Typically, each of the conductive traces **52** includes a contact pad **49**. The contact pad **49** may simply be a portion of the conductive trace **52** that is indistinguishable from the rest of the trace **52** except that the contact pad **49** is brought into contact with the conductive contacts of a control unit (e.g., the sensor control unit **44** of FIG. **1**). More commonly, however, the contact pad **49** is a region of the conductive trace **52** that has a larger width than other regions of the trace **52** to facilitate a connection with the contacts on the control unit. By making the contact pads **49** relatively large as compared with the width of the conductive traces **52**, the need for precise registration between the contact pads **49** and the contacts on the control unit is less critical than with small contact pads.

The contact pads **49** are typically made using the same material as the conductive material **56** of the conductive traces **52**. However, this is not necessary. Although metal, alloys, and metallic compounds may be used to form the contact pads **49**, in some embodiments, it is desirable to make the contact pads **49** from a carbon or other non-metallic material, such as a conducting polymer. In contrast to metal or alloy contact pads, carbon and other non-metallic contact pads are not easily corroded if the contact pads **49** are in a wet, moist, or humid environment. Metals and alloys may corrode under these conditions, particularly if the contact pads **49** and contacts of the control unit are made using different metals or alloys. However, carbon and non-metallic contact pads **49** do not significantly corrode, even if the contacts of the control device are metal or alloy.

One embodiment of the invention includes a sensor **42** having contact pads **49** and a control unit **44** having conductive contacts (not shown). During operation of the sensor **42**, the contact pads **49** and conductive contacts are in contact with each other. In this embodiment, either the contact pads **49** or the conductive contacts are made using a non-corroding, conductive material. Such materials include, for example, carbon and conducting polymers. Preferred non-corroding materials include graphite and vitreous carbon. The opposing contact pad or conductive contact is made using carbon, a conducting polymer, a metal, such as gold, palladium, or platinum group metal, or a metallic compound, such as ruthenium dioxide. This configuration of contact pads and conductive contacts typically reduces corrosion. Preferably, when the sensor is placed in a 3 mM, and more preferably, in a 100 mM, NaCl solution, the signal arising due to the corrosion of the contact pads and/or conductive contacts is less than 3% of the signal generated by the sensor when exposed to concentration of analyte in the normal physiological range. For at least some subcutaneous glucose sensors, the current generated by analyte in a normal physiological range ranges from 3 to 500 nA.

Each of the electrodes **58**, **60**, **62**, as well as the two probe leads **68**, **70** of the temperature probe **66** (described below), are connected to contact pads **49** as shown in FIGS. **10** and **11**. In one embodiment (not shown), the contact pads **49** are on the same side of the substrate **50** as the respective electrodes or temperature probe leads to which the contact pads **49** are attached.

In other embodiments, the conductive traces **52** on at least one side are connected through vias in the substrate to contact pads **49***a* on the opposite surface of the substrate **50**, as shown in FIGS. **10** and **11**. An advantage of this configuration is that contact between the contacts on the control unit and each of the electrodes **58**, **60**, **62** and the probe leads **68**,**70** of the temperature probe **66** can be made from a single side of the substrate **50**.

In yet other embodiments (not shown), vias through the substrate are used to provide contact pads on both sides of the substrate **50** for each conductive trace **52**. The vias connecting the conductive traces **52** with the contact pads **49***a* can be formed by making holes through the substrate **50** at the appropriate points and then filling the holes with conductive material **56**.

Exemplary Electrode Configurations

A number of exemplary electrode configurations are described below, however, it will be understood that other configurations may also be used. In one embodiment, illustrated in FIG. **3**A, the sensor **42** includes two working electrodes **58***a*, **58***b* and one counter electrode **60**, which also functions as a reference electrode. In another embodiment, the sensor includes one working electrode **58***a*, one counter electrode **60**, and one reference electrode **62**, as shown in FIG. **3**B. Each of these embodiments is illustrated with all of the electrodes formed on the same side of the substrate **50**.

Alternatively, one or more of the electrodes may be formed on an opposing side of the substrate **50**. This may be convenient if the electrodes are formed using two different types of conductive material **56** (e.g., carbon and silver/silver chloride). Then, at least in some embodiments, only one type of conductive material **56** needs to be applied to each side of the substrate **50**, thereby reducing the number of steps in the manufacturing process and/or easing the registration constraints in the process. For example, if the working electrode **58** is formed using a carbon-based conductive material **56** and the reference or counter/reference electrode is formed using a silver/silver chloride conductive material **56**, then the working electrode and reference or counter/reference electrode may be formed on opposing sides of the substrate **50** for case of manufacture.

In another embodiment, two working electrodes **58** and one counter electrode **60** are formed on one side of the substrate **50** and one reference electrode **62** and a temperature probe **66** are formed on an opposing side of the substrate **50**, as illustrated in FIG. **6**. The opposing sides of the tip of this embodiment of the sensor **42** are illustrated in FIGS. **7** and **8**.

Sensing Layer

Some analytes, such as oxygen, can be directly electrooxidized or electroreduced on the working electrode **58**. Other analytes, such as glucose and lactate, require the presence of at least one electron transfer agent and/or at least one catalyst to facilitate the electrooxidation or electroreduction of the analyte. Catalysts may also be used for those analyte, such as oxygen, that can be directly electrooxidized or electroreduced on the working electrode **58**. For these analytes, each working electrode **58** has a sensing layer **64** formed proximate to or on a working surface of the working electrode **58**. Typically, the sensing layer **64** is formed near or on only a small portion of the working electrode **58**, often near a tip of the sensor **42**. This limits the amount of material needed to form the sensor **42** and places the sensing layer **64** in the best position for contact with the analyte-containing fluid (e.g., a body fluid, sample fluid, or carrier fluid).

The sensing layer **64** includes one or more components designed to facilitate the electrolysis of the analyte. The sensing layer **64** may include, for example, a catalyst to catalyze a reaction of the analyte and produce a response at the working electrode **58**, an electron transfer agent to indirectly or directly transfer electrons between the analyte and the working electrode **58**, or both.

The sensing layer **64** may be formed as a solid composition of the desired components (e.g., an electron transfer agent and/or a catalyst). These components are preferably non-leachable from the sensor **42** and more preferably are immobilized on the sensor **42**. For example, the components may be immobilized on a working electrode **58**. Alternatively, the components of the sensing layer **64** may be immobilized within or between one or more membranes or films disposed over the working electrode **58** or the components may be immobilized in a polymeric or sol-gel matrix. Examples of immobilized sensing layers are described in U.S. Pat. Nos. 5,262,035, 5,264,104, 5,264,105, 5,320,725, 5,593,852, and 5,665,222, U.S. patent application Ser. No. 08/540,789, and PCT Patent Application No. US98/02403 entitled "Soybean Peroxidase Electrochemical Sensor", filed on Feb. 11, 1998, incorporated herein by reference.

In some embodiments, one or more of the components of the sensing layer **64** may be solvated, dispersed, or suspended in a fluid within the sensing layer **64**, instead of forming a solid composition. The fluid may be provided with the sensor **42** or may be absorbed by the sensor **42** from the analyte-containing fluid. Preferably, the components which are solvated, dispersed, or suspended in this type of sensing layer **64** are non-leachable from the sensing layer. Non-leachability may be accomplished, for example, by providing barriers (e.g., the electrode, substrate, membranes, and/or films) around the sensing layer which prevent the leaching of the components of the sensing layer **64**. One example of such a barrier is a microporous membrane or film which allows diffusion of the analyte into the sensing layer **64** to make contact with the components of the sensing layer **64**, but reduces or eliminates the diffusion of the sensing layer components (e.g., a electron transfer agent and/or a catalyst) out of the sensing layer **64**.

A variety of different sensing layer configurations can be used. In one embodiment, the sensing layer **64** is deposited on the conductive material **56** of a working electrode **58***a*, as illustrated in FIGS. **3**A and **3**B. The sensing layer **64** may extend beyond the conductive material **56** of the working electrode **58***a*. In some cases, the sensing layer **64** may also extend over the counter electrode **60** or reference electrode **62** without degrading the performance of the glucose sensor. For those sensors **42** which utilize channels **54** within which the conductive material **56** is deposited, a portion of the sensing layer **64** may be formed within the channel **54** if the conductive material **56** does not fill the channel **54**.

A sensing layer **64** in direct contact with the working electrode **58***a* may contain an electron transfer agent to transfer electrons directly or indirectly between the analyte and the working electrode, as well as a catalyst to facilitate a reaction of the analyte. For example, a glucose, lactate, or oxygen electrode may be formed having a sensing layer which contains a catalyst, such as glucose oxidase, lactate oxidase, or laccase, respectively, and an electron transfer agent that facilitates the electrooxidation of the glucose, lactate, or oxygen, respectively.

In another embodiment, the sensing layer **64** is not deposited directly on the working electrode **58***a*. Instead, the sensing layer **64** is spaced apart from the working electrode **58***a*, as illustrated in FIG. **4**A, and separated from the working electrode **58***a* by a separation layer **61**. The sepa-

ration layer **61** typically includes one or more membranes or films. In addition to separating the working electrode **58***a* from the sensing layer **64**, the separation layer **61** may also act as a mass transport limiting layer or an interferent eliminating layer, as described below.

Typically, a sensing layer **64**, which is not in direct contact with the working electrode **58***a*, includes a catalyst that facilitates a reaction of the analyte. However, this sensing layer **64** typically does not include an electron transfer agent that transfers electrons directly from the working electrode **58***a* to the analyte, as the sensing layer **64** is spaced apart from the working electrode **58***a*. One example of this type of sensor is a glucose or lactate sensor which includes an enzyme (e.g., glucose oxidase or lactate oxidase, respectively) in the sensing layer **64**. The glucose or lactate reacts with a second compound (e.g., oxygen) in the presence of the enzyme. The second compound is then electrooxidized or electroreduced at the electrode. Changes in the signal at the electrode indicate changes in the level of the second compound in the fluid and are proportional to changes in glucose or lactate level and, thus, correlate to the analyte level.

In another embodiment, two sensing layers **63**, **64** are used, as shown in FIG. **4**B. Each of the two sensing layers **63**, **64** may be independently formed on the working electrode **58***a* or in proximity to the working electrode **58***a*. One sensing layer **64** is typically, although not necessarily, spaced apart from the working electrode **58***a*. For example, this sensing layer **64** may include a catalyst which catalyzes a reaction of the analyte to form a product compound. The product compound is then electrolyzed in the second sensing layer **63** which may include an electron transfer agent to transfer electrons between the working electrode **58***a* and the product compound and/or a second catalyst to catalyze a reaction of the product compound to generate a signal at the working electrode **58***a*.

For example, a glucose or lactate sensor may include a first sensing layer **64** which is spaced apart from the working electrode and contains an enzyme, for example, glucose oxidase or lactate oxidase. The reaction of glucose or lactate in the presence of the appropriate enzyme forms hydrogen peroxide. A second sensing layer **63** is provided directly on the working electrode **58***a* and contains a peroxidase enzyme and an electron transfer agent to generate a signal at the electrode in response to the hydrogen peroxide. The level of hydrogen peroxide indicated by the sensor then correlates to the level of glucose or lactate. Another sensor which operates similarly can be made using a single sensing layer with both the glucose or lactate oxidase and the peroxidase being deposited in the single sensing layer. Examples of such sensors are described in U.S. Pat. No. 5,593,852, U.S. patent application Ser. No. 08/540,789, and PCT Patent Application No. US98/02403 entitled "Soybean Peroxidase Electrochemical Sensor", filed on Feb. 11, 1998, incorporated herein by reference.

In some embodiments, one or more of the working electrodes **58***b* do not have a corresponding sensing layer **64**, as shown in FIGS. **3**A and **4**A, or have a sensing layer (not shown) which does not contain one or more components (e.g., an electron transfer agent or catalyst) needed to electrolyze the analyte. The signal generated at this working electrode **58***b* typically arises from interferents and other sources, such as ions, in the fluid, and not in response to the analyte (because the analyte is not electrooxidized or electroreduced). Thus, the signal at this working electrode **58***b* corresponds to a background signal. The background signal can be removed from the analyte signal obtained from other working electrodes **58***a* that are associated with fully-functional sensing layers **64** by, for example, subtracting the signal at working electrode **58***b* from the signal at working electrode **58***a*.

Sensors having multiple working electrodes **58***a* may also be used to obtain more precise results by averaging the signals or measurements generated at these working electrodes **58***a*. In addition, multiple readings at a single working electrode **58***a* or at multiple working electrodes may be averaged to obtain more precise data.

Electron Transfer Agent

In many embodiments, the sensing layer **64** contains one or more electron transfer agents in contact with the conductive material **56** of the working electrode **58**, as shown in FIGS. **3**A and **3**B. In some embodiments of the invention, there is little or no leaching of the electron transfer agent away from the working electrode **58** during the period in which the sensor **42** is implanted in the patient. A diffusing or leachable (i.e., releasable) electron transfer agent often diffuses into the analyte-containing fluid, thereby reducing the effectiveness of the electrode by reducing the sensitivity of the sensor over time. In addition, a diffusing or leaching electron transfer agent in an implantable sensor **42** may also cause damage to the patient. In these embodiments, preferably, at least 90%, more preferably, at least 95%, and, most preferably, at least 99%, of the electron transfer agent remains disposed on the sensor after immersion in the analyte-containing fluid for 24 hours, and, more preferably, for 72 hours. In particular, for an implantable sensor, preferably, at least 90%, more preferably, at least 95%, and most preferably, at least 99%, of the electron transfer agent remains disposed on the sensor after immersion in the body fluid at 37° C. for 24 hours, and, more preferably, for 72 hours.

In some embodiments of the invention, to prevent leaching, the electron transfer agents are bound or otherwise immobilized on the working electrode **58** or between or within one or more membranes or films disposed over the working electrode **58**. The electron transfer agent may be immobilized on the working electrode **58** using, for example, a polymeric or sol-gel immobilization technique. Alternatively, the electron transfer agent may be chemically (e.g., ionically, covalently, or coordinatively) bound to the working electrode **58**, either directly or indirectly through another molecule, such as a polymer, that is in turn bound to the working electrode **58**.

Application of the sensing layer **64** on a working electrode **58***a* is one method for creating a working surface for the working electrode **58***a*, as shown in FIGS. **3**A and **3**B. The electron transfer agent mediates the transfer of electrons to electrooxidize or electroreduce an analyte and thereby permits a current flow between the working electrode **58** and the counter electrode **60** via the analyte. The mediation of the electron transfer agent facilitates the electrochemical analysis of analytes which are not suited for direct electrochemical reaction on an electrode.

In general, the preferred electron transfer agents are electroreducible and electrooxidizable ions or molecules having redox potentials that are a few hundred millivolts above or below the redox potential of the standard calomel electrode (SCE). Preferably, the electron transfer agents are not more reducing than about −150 mV and not more oxidizing than about +400 mV versus SCE.

The electron transfer agent may be organic, organometallic, or inorganic. Examples of organic redox species are quinones and species that in their oxidized state have quinoid structures, such as Nile blue and indophenol.

Some quinones and partially oxidized quinhydrones react with functional groups of proteins such as the thiol groups of cysteine, the amine groups of lysine and arginine, and the phenolic groups of tyrosine which may render those redox species unsuitable for some of the sensors of the present invention because of the presence of the interfering proteins in an analyte-containing fluid. Usually substituted quinones and molecules with quinoid structure are less reactive with proteins and are preferred. A preferred tetrasubstituted quinone usually has carbon atoms in positions 1, 2, 3, and 4.

In general, electron transfer agents suitable for use in the invention have structures or charges which prevent or substantially reduce the diffusional loss of the electron transfer agent during the period of time that the sample is being analyzed. The preferred electron transfer agents include a redox species bound to a polymer which can in turn be immobilized on the working electrode. The bond between the redox species and the polymer may be covalent, coordinative, or ionic. Useful electron transfer agents and methods for producing them are described in U.S. Pat. Nos. 5,264,104; 5,356,786; 5,262,035; and 5,320,725, incorporated herein by reference. Although any organic or organometallic redox species can be bound to a polymer and used as an electron transfer agent, the preferred redox species is a transition metal compound or complex. The preferred transition metal compounds or complexes include osmium, ruthenium, iron, and cobalt compounds or complexes. The most preferred are osmium compounds and complexes. It will be recognized that many of the redox species described below may also be used, typically without a polymeric component, as electron transfer agents in a carrier fluid or in a sensing layer of a sensor where leaching of the electron transfer agent is acceptable.

One type of non-releasable polymeric electron transfer agent contains a redox species covalently bound in a polymeric composition. An example of this type of mediator is poly(vinylferrocene).

Another type of non-releasable electron transfer agent contains an ionically-bound redox species. Typically, this type of mediator includes a charged polymer coupled to an oppositely charged redox species. Examples of this type of mediator include a negatively charged polymer such as Nafion® (DuPont) coupled to a positively charged redox species such as an osmium or ruthenium polypyridyl cation. Another example of an ionically-bound mediator is a positively charged polymer such as quaternized poly(4-vinyl pyridine) or poly(1-vinyl imidazole) coupled to a negatively charged redox species such as ferricyanide or ferrocyanide. The preferred ionically-bound redox species is a highly charged redox species bound within an oppositely charged redox polymer.

In another embodiment of the invention, suitable non-releasable electron transfer agents include a redox species coordinatively bound to a polymer. For example, the mediator may be formed by coordination of an osmium or cobalt 2,2'-bipyridyl complex to poly(1-vinyl imidazole) or poly (4-vinyl pyridine).

The preferred electron transfer agents are osmium transition metal complexes with one or more ligands, each ligand having a nitrogen-containing heterocycle such as 2,2'-bipyridine, 1,10-phenanthroline, or derivatives thereof. Furthermore, the preferred electron transfer agents also have one or more ligands covalently bound in a polymer, each ligand having at least one nitrogen-containing heterocycle, such as pyridine, imidazole, or derivatives thereof. These preferred electron transfer agents exchange electrons rapidly between each other and the working electrodes **58** so that the complex can be rapidly oxidized and reduced.

One example of a particularly useful electron transfer agent includes (a) a polymer or copolymer having pyridine or imidazole functional groups and (b) osmium cations complexed with two ligands, each ligand containing 2,2'-bipyridine, 1,10-phenanthroline, or derivatives thereof, the two ligands not necessarily being the same. Preferred derivatives of 2,2'-bipyridine for complexation with the osmium cation are 4,4'-dimethyl-2,2'-bipyridine and mono-, di-, and polyalkoxy-2,2'-bipyridines, such as 4,4'-dimethoxy-2,2'-bipyridine. Preferred derivatives of 1,10-phenanthroline for complexation with the osmium cation are 4,7-dimethyl-1,10-phenanthroline and mono, di-, and polyalkoxy-1,10-phenanthrolines, such as 4,7-dimethoxy-1,10-phenanthroline. Preferred polymers for complexation with the osmium cation include polymers and copolymers of poly(1-vinyl imidazole) (referred to as "PVI") and poly(4-vinyl pyridine) (referred to as "PVP"). Suitable copolymer substituents of poly(1-vinyl imidazole) include acrylonitrile, acrylamide, and substituted or quaternized N-vinyl imidazole. Most preferred are electron transfer agents with osmium complexed to a polymer or copolymer of poly(1-vinyl imidazole).

The preferred electron transfer agents have a redox potential ranging from −100 mV to about +150 mV versus the standard calomel electrode (SCE). Preferably, the potential of the electron transfer agent ranges from −100 mV to +150 mV and more preferably, the potential ranges from −50 mV to +50 mV. The most preferred electron transfer agents have osmium redox centers and a redox potential ranging from +50 mV to −150 mV versus SCE.

Catalyst

The sensing layer **64** may also include a catalyst which is capable of catalyzing a reaction of the analyte. The catalyst may also, in some embodiments, act as an electron transfer agent. One example of a suitable catalyst is an enzyme which catalyzes a reaction of the analyte. For example, a catalyst, such as a glucose oxidase, glucose dehydrogenase (e.g., pyrroloquinoline quinone glucose dehydrogenase (PQQ)), or oligosaccharide dehydrogenase, may be used when the analyte is glucose. A lactate oxidase or lactate dehydrogenase may be used when the analyte is lactate. Laccase may be used when the analyte is oxygen or when oxygen is generated or consumed in response to a reaction of the analyte.

Preferably, the catalyst is non-leachably disposed on the sensor, whether the catalyst is part of a solid sensing layer in the sensor or solvated in a fluid within the sensing layer. More preferably, the catalyst is immobilized within the sensor (e.g., on the electrode and/or within or between a membrane or film) to prevent unwanted leaching of the catalyst away from the working electrode **58** and into the patient. This may be accomplished, for example, by attaching the catalyst to a polymer, cross linking the catalyst with another electron transfer agent (which, as described above, can be polymeric), and/or providing one or more barrier membranes or films with pore sizes smaller than the catalyst.

As described above, a second catalyst may also be used. This second catalyst is often used to catalyze a reaction of a product compound resulting from the catalyzed reaction of the analyte. The second catalyst typically operates with an electron transfer agent to electrolyze the product compound to generate a signal at the working electrode. Alternatively, the second catalyst may be provided in an interferent-eliminating layer to catalyze reactions that remove interferents, as described below.

One embodiment of the invention is an electrochemical sensor in which the catalyst is mixed or dispersed in the

conductive material **56** which forms the conductive trace **52** of a working electrode **58**. This may be accomplished, for example, by mixing a catalyst, such as an enzyme, in a carbon ink and applying the mixture into a channel **54** on the surface of the substrate **50**. Preferably, the catalyst is immobilized in the channel **53** so that it can not leach away from the working electrode **58**. This may be accomplished, for example, by curing a binder in the carbon ink using a curing technique appropriate to the binder. Curing techniques include, for example, evaporation of a solvent or dispersant, exposure to ultraviolet light, or exposure to heat. Typically, the mixture is applied under conditions that do not substantially degrade the catalyst. For example, the catalyst may be an enzyme that is heat-sensitive. The enzyme and conductive material mixture should be applied and cured, preferably, without sustained periods of heating. The mixture may be cured using evaporation or UV curing techniques or by the exposure to heat that is sufficiently short that the catalyst is not substantially degraded.

Another consideration for in vivo analyte sensors is the thermostability of the catalyst. Many enzymes have only limited stability at biological temperatures. Thus, it may be necessary to use large amounts of the catalyst and/or use a catalyst that is thermostable at the necessary temperature (e.g., 37° C. or higher for normal body temperature). A thermostable catalyst may be defined as a catalyst which loses less than 5% of its activity when held at 37° C. for at least one hour, preferably, at least one day, and more preferably at least three days. One example of a thermostable catalyst is soybean peroxidase. This particular thermostable catalyst may be used in a glucose or lactate sensor when combined either in the same or separate sensing layers with glucose or lactate oxidase or dehydrogenase. A further description of thermostable catalysts and their use in electrochemical inventions is found in U.S. Pat. No. 5,665,222 U.S. patent application Ser. No. 08/540,789, and PCT Application No. US98/02403 entitled "Soybean Peroxidase Electrochemical Sensor", filed on Feb. 11, 1998.

Electrolysis of the Analyte

To electrolyze the analyte, a potential (versus a reference potential) is applied across the working and counter electrodes **58**, **60**. The minimum magnitude of the applied potential is often dependent on the particular electron transfer agent, analyte (if the analyte is directly electrolyzed at the electrode), or second compound (if a second compound, such as oxygen or hydrogen peroxide, whose level is dependent on the analyte level, is directly electrolyzed at the electrode). The applied potential usually equals or is more oxidizing or reducing, depending on the desired electrochemical reaction, than the redox potential of the electron transfer agent, analyte, or second compound, whichever is directly electrolyzed at the electrode. The potential at the working electrode is typically large enough to drive the electrochemical reaction to or near completion.

The magnitude of the potential may optionally be limited to prevent significant (as determined by the current generated in response to the analyte) electrochemical reaction of interferents, such as urate, ascorbate, and acetaminophen. The limitation of the potential may be obviated if these interferents have been removed in another way, such as by providing an interferent-limiting barrier, as described below, or by including a working electrode **58***b* (see FIG. **3**A) from which a background signal may be obtained.

When a potential is applied between the working electrode **58** and the counter electrode **60**, an electrical current will flow. The current is a result of the electrolysis of the analyte or a second compound whose level is affected by the analyte. In one embodiment, the electrochemical reaction occurs via an electron transfer agent and the optional catalyst. Many analytes B are oxidized (or reduced) to products C by an electron transfer agent species A in the presence of an appropriate catalyst (e.g., an enzyme). The electron transfer agent A is then oxidized (or reduced) at the electrode. Electrons are collected by (or removed from) the electrode and the resulting current is measured. This process is illustrated by reaction equations (1) and (2) (similar equations may be written for the reduction of the analyte B by a redox mediator A in the presence of a catalyst):

$$nA(ox) + B \xrightarrow{\text{catalyst}} nA(red) + C \tag{1}$$

$$nA(red) \xrightarrow{\text{electrode}} nA(ox) + ne^- \tag{2}$$

As an example, an electrochemical sensor may be based on the reaction of a glucose molecule with two non-leachable ferricyanide anions in the presence of glucose oxidase to produce two non-leachable ferrocyanide anions, two hydrogen ions, and gluconolactone. The amount of glucose present is assayed by electrooxidizing the non-leachable ferrocyanide anions to non-leachable ferricyanide anions and measuring the current.

In another embodiment, a second compound whose level is affected by the analyte is electrolyzed at the working electrode. In some cases, the analyte D and the second compound, in this case, a reactant compound E, such as oxygen, react in the presence of the catalyst, as shown in reaction equation (3).

$$D + E \xrightarrow{\text{catalyst}} F + G \tag{3}$$

The reactant compound E is then directly oxidized (or reduced) at the working electrode, as shown in reaction equation (4)

$$nE(red) \xrightarrow{\text{electrode}} nE(ox) + ne^- \tag{4}$$

Alternatively, the reactant compound E is indirectly oxidized (or reduced) using an electron transfer agent H (optionally in the presence of a catalyst), that is subsequently reduced or oxidized at the electrode, as shown in reaction equations (5) and (6).

$$nH(ox) + E \rightarrow nH(red) + I \tag{5}$$

$$nH(red) \xrightarrow{\text{electrode}} nH(ox) + ne^- \tag{6}$$

In either case, changes in the concentration of the reactant compound, as indicated by the signal at the working electrode, correspond inversely to changes in the analyte (i.e., as the level of analyte increase then the level of reactant compound and the signal at the electrode decreases.)

In other embodiments, the relevant second compound is a product compound F, as shown in reaction equation (3). The product compound F is formed by the catalyzed reaction of analyte D and then be directly electrolyzed at the electrode or indirectly electrolyzed using an electron transfer agent and, optionally, a catalyst. In these embodiments, the signal arising from the direct or indirect electrolysis of the product compound F at the working electrode corresponds directly to the level of the analyte (unless there are other sources of the

product compound). As the level of analyte increases, the level of the product compound and signal at the working electrode increases.

Those skilled in the art will recognize that there are many different reactions that will achieve the same result; namely the electrolysis of an analyte or a compound whose level depends on the level of the analyte. Reaction equations (1) through (6) illustrate non-limiting examples of such reactions.

Temperature Probe

A variety of optional items may be included in the sensor. One optional item is a temperature probe **66** (FIGS. **8** and **11**). The temperature probe **66** may be made using a variety of known designs and materials. One exemplary temperature probe **66** is formed using two probe leads **68, 70** connected to each other through a temperature-dependent element **72** that is formed using a material with a temperature-dependent characteristic. An example of a suitable temperature-dependent characteristic is the resistance of the temperature-dependent element **72**.

The two probe leads **68, 70** are typically formed using a metal, an alloy, a semimetal, such as graphite, a degenerate or highly doped semiconductor, or a small-band gap semiconductor. Examples of suitable materials include gold, silver, ruthenium oxide, titanium nitride, titanium dioxide, indium doped tin oxide, tin doped indium oxide, or graphite. The temperature-dependent element **72** is typically made using a fine trace (e.g., a conductive trace that has a smaller cross-section than that of the probe leads **68, 70**) of the same conductive material as the probe leads, or another material such as a carbon ink, a carbon fiber, or platinum, which has a temperature-dependent characteristic, such as resistance, that provides a temperature-dependent signal when a voltage source is attached to the two probe leads **68, 70** of the temperature probe **66**. The temperature-dependent characteristic of the temperature-dependent element **72** may either increase or decrease with temperature. Preferably, the temperature dependence of the characteristic of the temperature-dependent element **72** is approximately linear with temperature over the expected range of biological temperatures (about 25 to 45° C.), although this is not required.

Typically, a signal (e.g., a current) having an amplitude or other property that is a function of the temperature can be obtained by providing a potential across the two probe leads **68, 70** of the temperature probe **66**. As the temperature changes, the temperature-dependent characteristic of the temperature-dependent element **72** increases or decreases with a corresponding change in the signal amplitude. The signal from the temperature probe **66** (e.g., the amount of current flowing through the probe) may be combined with the signal obtained from the working electrode **58** by, for example, scaling the temperature probe signal and then adding or subtracting the scaled temperature probe signal from the signal at the working electrode **58**. In this manner, the temperature probe **66** can provide a temperature adjustment for the output from the working electrode **58** to offset the temperature dependence of the working electrode **58**.

One embodiment of the temperature probe includes probe leads **68, 70** formed as two spaced-apart channels with a temperature-dependent element **72** formed as a cross-channel connecting the two spaced-apart channels, as illustrated in FIG. **8**. The two spaced-apart channels contain a conductive material, such as a metal, alloy, semimetal, degenerate semiconductor, or metallic compound. The cross-channel may contain the same material (provided the cross-channel has a smaller cross-section than the two spaced-apart channels) as the probe leads **68, 70**. In other embodiments, the material in the cross-channel is different than the material of the probe leads **68, 70**.

One exemplary method for forming this particular temperature probe includes forming the two spaced-apart channels and then filling them with the metallic or alloyed conductive material. Next, the cross-channel is formed and then filled with the desired material. The material in the cross-channel overlaps with the conductive material in each of the two spaced-apart channels to form an electrical connection.

For proper operation of the temperature probe **66**, the temperature-dependent element **72** of the temperature probe **66** can not be shorted by conductive material formed between the two probe leads **68, 70**. In addition, to prevent conduction between the two probe leads **68, 70** by ionic species within the body or sample fluid, a covering may be provided over the temperature-dependent element **72**, and preferably over the portion of the probe leads **68, 70** that is implanted in the patient. The covering may be, for example, a non-conducting film disposed over the temperature-dependent element **72** and probe leads **68, 70** to prevent the ionic conduction. Suitable non-conducting films include, for example, Kapton™ polyimide films (DuPont, Wilmington, Del.).

Another method for eliminating or reducing conduction by ionic species in the body or sample fluid is to use an ac voltage source connected to the probe leads **68, 70**. In this way, the positive and negative ionic species are alternately attracted and repelled during each half cycle of the ac voltage. This results in no net attraction of the ions in the body or sample fluid to the temperature probe **66**. The maximum amplitude of the ac current through the temperature-dependent element **72** may then be used to correct the measurements from the working electrodes **58**.

The temperature probe can be placed on the same substrate as the electrodes. Alternatively, a temperature probe may be placed on a separate substrate. In addition, the temperature probe may be used by itself or in conjunction with other devices.

Another embodiment of a temperature probe utilizes the temperature dependence of the conductivity of a solution (e.g., blood or interstitial fluid). Typically, the conductivity of an electrolyte-containing solution is dependent on the temperature of the solution, assuming that the concentration of electrolytes is relatively constant. Blood, interstitial fluid, and other bodily fluids are solutions with relatively constant levels of electrolytes. Thus, a sensor **42** can include two or more conductive traces (not shown) which are spaced apart by a known distance. A portion of these conductive traces is exposed to the solution and the conductivity between the exposed portions of the conductive traces is measured using known techniques (e.g., application of a constant or known current or potential and measurement of the resulting potential or current, respectively, to determine the conductivity).

A change in conductivity is related to a change in temperature. This relation can be modeled using linear, quadratic, exponential, or other relations. The parameters for this relationship typically do not vary significantly between most people. The calibration for the temperature probe can be determined by a variety of methods, including, for example, calibration of each sensor **42** using an independent method of determining temperature (e.g., a thermometer, an optical or electrical temperature detector, or the temperature probe **66**, described above) or calibrating one sensor **42** and using that calibration for all other sensors in a batch based on uniformity in geometry.

Biocompatible Layer

An optional film layer **75** is formed over at least that portion of the sensor **42** which is subcutaneously inserted into the patient, as shown in FIG. **9**. This optional film layer **74** may serve one or more functions. The film layer **74** prevents the penetration of large biomolecules into the electrodes. This is accomplished by using a film layer **74** having a pore size that is smaller than the biomolecules that are to be excluded. Such biomolecules may foul the electrodes and/or the sensing layer **64** thereby reducing the effectiveness of the sensor **42** and altering the expected signal amplitude for a given analyte concentration. The fouling of the working electrodes **58** may also decrease the effective life of the sensor **42**. The biocompatible layer **74** may also prevent protein adhesion to the sensor **42**, formation of blood clots, and other undesirable interactions between the sensor **42** and body.

For example, the sensor may be completely or partially coated on its exterior with a biocompatible coating. A preferred biocompatible coating is a hydrogel which contains at least 20 wt. % fluid when in equilibrium with the analyte-containing fluid. Examples of suitable hydrogels are described in U.S. Pat. No. 5,593,852, incorporated herein by reference, and include crosslinked polyethylene oxides, such as polyethylene oxide tetraacrylate.

Interferent-Eliminating Layer

An interferent-eliminating layer (not shown) may be included in the sensor **42**. The interferent-eliminating layer may be incorporated in the biocompatible layer **75** or in the mass transport limiting layer **74** (described below) or may be a separate layer. Interferents are molecules or other species that are electroreduced or electrooxidized at the electrode, either directly or via an electron transfer agent, to produce a false signal. In one embodiment, a film or membrane prevents the penetration of one or more interferents into the region around the working electrodes **58**. Preferably, this type of interferent-eliminating layer is much less permeable to one or more of the interferents than to the analyte.

The interferent-eliminating layer may include ionic components, such as Nafion®, incorporated into a polymeric matrix to reduce the permeability of the interferent-eliminating layer to ionic interferents having the same charge as the ionic components. For example, negatively charged compounds or compounds that form negative ions may be incorporated in the interferent-eliminating layer to reduce the permeation of negative species in the body or sample fluid.

Another example of an interferent-eliminating layer includes a catalyst for catalyzing a reaction which removes interferents. One example of such a catalyst is a peroxidase. Hydrogen peroxide reacts with interferents, such as acetaminophen, urate, and ascorbate. The hydrogen peroxide may be added to the analyte-containing fluid or may be generated in situ, by, for example, the reaction of glucose or lactate in the presence of glucose oxidase or lactate oxidase, respectively. Examples of interferent eliminating layers include a peroxidase enzyme crosslinked (a) using gluteraldehyde as a crosslinking agent or (b) oxidation of oligosaccharide groups in the peroxidase glycoenzyme with $NaIO_4$, followed by coupling of the aldehydes formed to hydrazide groups in a polyacrylamide matrix to form hydrazones are describe in U.S. Pat. Nos. 5,262,305 and 5,356,786, incorporated herein by reference.

Mass Transport Limiting Layer

A mass transport limiting layer **74** may be included with the sensor to act as a diffusion-limiting barrier to reduce the rate of mass transport of the analyte, for example, glucose or lactate, into the region around the working electrodes **58**. By limiting the diffusion of the analyte, the steady state concentration of the analyte in the proximity of the working electrode **58** (which is proportional to the concentration of the analyte in the body or sample fluid) can be reduced. This extends the upper range of analyte concentrations that can still be accurately measured and may also expand the range in which the current increases approximately linearly with the level of the analyte.

It is preferred that the permeability of the analyte through the film layer **74** vary little or not at all with temperature, so as to reduce or eliminate the variation of current with temperature. For this reason, it is preferred that in the biologically relevant temperature range from about 25° C. to about 45° C., and most importantly from 30° C. to 40° C., neither the size of the pores in the film nor its hydration or swelling change excessively. Preferably, the mass transport limiting layer is made using a film that absorbs less than 5 wt. % of fluid over 24 hours. This may reduce or obviate any need for a temperature probe. For implantable sensors, it is preferable that the mass transport limiting layer is made using a film that absorbs less than 5 wt. % of fluid over 24 hours at 37° C.

Particularly useful materials for the film layer **74** are membranes that do not swell in the analyte-containing fluid that the sensor tests. Suitable membranes include 3 to 20,000 nm diameter pores. Membranes having 5 to 500 nm diameter pores with well-defined, uniform pore sizes and high aspect ratios are preferred. In one embodiment, the aspect ratio of the pores is preferably two or greater and more preferably five or greater.

Well-defined and uniform pores can be made by track etching a polymeric membrane using accelerated electrons, ions, or particles emitted by radioactive nuclei. Most preferred are anisotropic, polymeric, track etched membranes that expand less in the direction perpendicular to the pores than in the direction of the pores when heated. Suitable polymeric membranes included polycarbonate membranes from Poretics (Livermore, Calif., catalog number 19401, 0.01 μm pore size polycarbonate membrane) and Corning Costar Corp. (Cambridge, Mass., Nucleopore™ brand membranes with 0.015 μm pore size). Other polyolefin and polyester films may be used. It is preferred that the permeability of the mass transport limiting membrane changes no more than 4%, preferably, no more than 3%, and, more preferably, no more than 2%, per ° C. in the range from 30° C. to 40° C. when the membranes resides in the subcutaneous interstitial fluid.

In some embodiments of the invention, the mass transport limiting layer **74** may also limit the flow of oxygen into the sensor **42**. This can improve the stability of sensors **42** that are used in situations where variation in the partial pressure of oxygen causes non-linearity in sensor response. In these embodiments, the mass transport limiting layer **74** restricts oxygen transport by at least 40%, preferably at least 60%, and more preferably at least 80%, than the membrane restricts transport of the analyte. For a given type of polymer, films having a greater density (e.g., a density closer to that of the crystalline polymer) are preferred. Polyesters, such as polyethylene terephthalate, are typically less permeable to oxygen and are, therefore, preferred over polycarbonate membranes.

Anticlotting Agent

An implantable sensor may also, optionally, have an anticlotting agent disposed on a portion the substrate which is implanted into a patient. This anticlotting agent may reduce or eliminate the clotting of blood or other body fluid

around the sensor, particularly after insertion of the sensor. Blood clots may foul the sensor or irreproducibly reduce the amount of analyte which diffuses into the sensor. Examples of useful anticlotting agents include heparin and tissue plasminogen activator (TPA), as well as other known anticlotting agents.

The anticlotting agent may be applied to at least a portion of that part of the sensor **42** that is to be implanted. The anticlotting agent may be applied, for example, by bath, spraying, brushing, or dipping. The anticlotting agent is allowed to dry on the sensor **42**. The anticlotting agent may be immobilized on the surface of the sensor or it may be allowed to diffuse away from the sensor surface. Typically, the quantities of anticlotting agent disposed on the sensor are far below the amounts typically used for treatment of medical conditions involving blood clots and, therefore, have only a limited, localized effect.

Sensor Lifetime

The sensor **42** may be designed to be a replaceable component in an in vivo analyte monitor, and particularly in an implantable analyte monitor. Typically, the sensor **42** is capable of operation over a period of days. Preferably, the period of operation is at least one day, more preferably at least three days, and most preferably at least one week. The sensor **42** can then be removed and replaced with a new sensor. The lifetime of the sensor **42** may be reduced by the fouling of the electrodes or by the leaching of the electron transfer agent or catalyst. These limitations on the longevity of the sensor **42** can be overcome by the use of a biocompatible layer **75** or non-leachable electron transfer agent and catalyst, respectively, as described above.

Another primary limitation on the lifetime of the sensor **42** is the temperature stability of the catalyst. Many catalysts are enzymes, which are very sensitive to the ambient temperature and may degrade at temperatures of the patient's body (e.g., approximately 37° C. for the human body). Thus, robust enzymes should be used where available. The sensor **42** should be replaced when a sufficient amount of the enzyme has been deactivated to introduce an unacceptable amount of error in the measurements.

Insertion Device

An insertion device **120** can be used to subcutaneously insert the sensor **42** into the patient, as illustrated in FIG. **12**. The insertion device **120** is typically formed using structurally rigid materials, such as metal or rigid plastic. Preferred materials include stainless steel and ABS (acrylonitrile-butadiene-styrene) plastic. In some embodiments, the insertion device **120** is pointed and/or sharp at the tip **121** to facilitate penetration of the skin of the patient. A sharp, thin insertion device may reduce pain felt by the patient upon insertion of the sensor **42**. In other embodiments, the tip **121** of the insertion device **120** has other shapes, including a blunt or flat shape. These embodiments may be particularly useful when the insertion device **120** does not penetrate the skin but rather serves as a structural support for the sensor **42** as the sensor **42** is pushed into the skin.

The insertion device **120** may have a variety of cross-sectional shapes, as shown in FIGS. **13**A, **13**B, and **13**C. The insertion device **120** illustrated in FIG. **13**A is a flat, planar, pointed strip of rigid material which may be attached or otherwise coupled to the sensor **42** to ease insertion of the sensor **42** into the skin of the patient, as well as to provide structural support to the sensor **42** during insertion. The insertion devices **120** of FIGS. **13**B and **13**C are U- or V-shaped implements that support the sensor **42** to limit the amount that the sensor **42** may bend or bow during insertion. The cross-sectional width **124** of the insertion devices **120** illustrated in FIGS. **13**B and **13**C is typically 1 mm or less, preferably 700 μm or less, more preferably 500 μm or less, and most preferably 300 μm or less. The cross-sectional height **126** of the insertion device **120** illustrated in FIGS. **13**B and **13**C is typically about 1 mm or less, preferably about 700 μm or less, and more preferably about 500 μm or less.

The sensor **42** itself may include optional features to facilitate insertion. For example, the sensor **42** may be pointed at the tip **123** to ease insertion, as illustrated in FIG. **12**. In addition, the sensor **42** may include a barb **125** which helps retain the sensor **42** in the subcutaneous tissue of the patient. The barb **125** may also assist in anchoring the sensor **42** within the subcutaneous tissue of the patient during operation of the sensor **42**. However, the barb **125** is typically small enough that little damage is caused to the subcutaneous tissue when the sensor **42** is removed for replacement. The sensor **42** may also include a notch **127** that can be used in cooperation with a corresponding structure (not shown) in the insertion device to apply pressure against the sensor **42** during insertion, but disengage as the insertion device **120** is removed. One example of such a structure in the insertion device is a rod (not shown) between two opposing sides of an insertion device **120** and at an appropriate height of the insertion device **120**.

In operation, the sensor **42** is placed within or next to the insertion device **120** and then a force is provided against the insertion device **120** and/or sensor **42** to carry the sensor **42** into the skin of the patient. In one embodiment, the force is applied to the sensor **42** to push the sensor into the skin, while the insertion device **120** remains stationary and provides structural support to the sensor **42**. Alternatively, the force is applied to the insertion device **120** and optionally to the sensor **42** to push a portion of both the sensor **42** and the insertion device **120** through the skin of the patient and into the subcutaneous tissue. The insertion device **120** is optionally pulled out of the skin and subcutaneous tissue with the sensor **42** remaining in the subcutaneous tissue due to frictional forces between the sensor **42** and the patient's tissue. If the sensor **42** includes the optional barb **125**, then this structure may also facilitate the retention of the sensor **42** within the interstitial tissue as the barb catches in the tissue.

The force applied to the insertion device **120** and/or the sensor **42** may be applied manually or mechanically. Preferably, the sensor **42** is reproducibly inserted through the skin of the patient. In one embodiment, an insertion gun is used to insert the sensor. One example of an insertion gun **200** for inserting a sensor **42** is shown in FIG. **26**. The insertion gun **200** includes a housing **202** and a carrier **204**. The insertion device **120** is typically mounted on the carrier **204** and the sensor **42** is pre-loaded into the insertion device **120**. The carrier **204** drives the sensor **42** and, optionally, the insertion device **120** into the skin of the patient using, for example, a cocked or wound spring, a burst of compressed gas, an electromagnet repelled by a second magnet, or the like, within the insertion gun **200**. In some instances, for example, when using a spring, the carrier **204** and insertion device may be moved, cocked, or otherwise prepared to be directed towards the skin of the patient.

After the sensor **42** is inserted, the insertion gun **200** may contain a mechanism which pulls the insertion device **120** out of the skin of the patient. Such a mechanism may use a spring, electromagnet, or the like to remove the insertion device **120**.

The insertion gun may be reusable. The insertion device **120** is often disposable to avoid the possibility of contami-

nation. Alternatively, the insertion device **120** may be sterilized and reused. In addition, the insertion device **120** and/or the sensor **42** may be coated with an anticlotting agent to prevent fouling of the sensor **42**.

In one embodiment, the sensor **42** is injected between 2 to 12 mm into the interstitial tissue of the patient for subcutaneous implantation. Preferably, the sensor is injected 3 to 9 mm, and more preferably 5 to 7 mm, into the interstitial tissue. Other embodiments of the invention, may include sensors implanted in other portions of the patient, including, for example, in an artery, vein, or organ. The depth of implantation varies depending on the desired implantation target.

Although the sensor **42** may be inserted anywhere in the body, it is often desirable that the insertion site be positioned so that the on-skin sensor control unit **44** can be concealed. In addition, it is often desirable that the insertion site be at a place on the body with a low density of nerve endings to reduce the pain to the patient. Examples of preferred sites for insertion of the sensor **42** and positioning of the on-skin sensor control unit **44** include the abdomen, thigh, leg, upper arm, and shoulder.

An insertion angle is measured from the plane of the skin (i.e., inserting the sensor perpendicular to the skin would be a 90° insertion angle). Insertion angles usually range from 10 to 90°, typically from 15 to 60°, and often from 30 to 45°.

On-Skin Sensor Control Unit

The on-skin sensor control unit **44** is configured to be placed on the skin of a patient. The on-skin sensor control unit **44** is optionally formed in a shape that is comfortable to the patient and which may permit concealment, for example, under a patient's clothing. The thigh, leg, upper arm, shoulder, or abdomen are convenient parts of the patient's body for placement of the on-skin sensor control unit **44** to maintain concealment. However, the on-skin sensor control unit **44** may be positioned on other portions of the patient's body. One embodiment of the on-skin sensor control unit **44** has a thin, oval shape to enhance concealment, as illustrated in FIGS. **14–16**. However, other shapes and sizes may be used.

The particular profile, as well as the height, width, length, weight, and volume of the on-skin sensor control unit **44** may vary and depends, at least in part, on the components and associated functions included in the on-skin sensor control unit **44**, as discussed below. For example, in some embodiments, the on-skin sensor control unit **44** has a height of 1.3 cm or less, and preferably 0.7 cm or less. In some embodiments, the on-skin sensor control unit **44** has a weight of 90 grams or less, preferably 45 grams or less, and more preferably 25 grams or less. In some embodiments, the on-skin sensor control unit **44** has a volume of about 15 cm^3 or less, preferably about 10 cm^3 or less, more preferably about 5 cm^3 or less, and most preferably about 2.5 cm^3 or less.

The on-skin sensor control unit **44** includes a housing **45**, as illustrated in FIGS. **14–16**. The housing **45** is typically formed as a single integral unit that rests on the skin of the patient. The housing **45** typically contains most or all of the electronic components, described below, of the on-skin sensor control unit **44**. The on-skin sensor control unit **44** usually includes no additional cables or wires to other electronic components or other devices. If the housing includes two or more parts, then those parts typically fit together to form a single integral unit.

The housing **45** of the on-skin sensor control unit **44**, illustrated in FIGS. **14–16**, may be formed using a variety of materials, including, for example, plastic and polymeric materials, particularly rigid thermoplastics and engineering thermoplastics. Suitable materials include, for example, polyvinyl chloride, polyethylene, polypropylene, polystyrene, ABS polymers, and copolymers thereof. The housing **45** of the on-skin sensor control unit **44** may be formed using a variety of techniques including, for example, injection molding, compression molding, casting, and other molding methods. Hollow or recessed regions may be formed in the housing **45** of the on-skin sensor control unit **44**. The electronic components of the on-skin sensor control unit **44**, described below, and/or other items, such as a battery or a speaker for an audible alarm, may be placed in the hollow or recessed areas.

In some embodiments, conductive contacts **80** are provided on the exterior of the housing **45**. In other embodiments, the conductive contacts **80** are provided on the interior of the housing **45**, for example, within a hollow or recessed region.

In some embodiments, the electronic components and/or other items are incorporated into the housing **45** of the on-skin sensor control unit **44** as the plastic or polymeric material is molded or otherwise formed. In other embodiments, the electronic components and/or other items are incorporated into the housing **45** as the molded material is cooling or after the molded material has been reheated to make it pliable. Alternatively, the electronic components and/or other items may be secured to the housing **45** using fasteners, such as screws, nuts and bolts, nails, staples, rivets, and the like or adhesives, such as contact adhesives, pressure sensitive adhesives, glues, epoxies, adhesive resins, and the like. In some cases, the electronic components and/or other items are not affixed to the housing **45** at all.

In some embodiments, the housing **45** of the on-skin sensor control unit **44** is a single piece. The conductive contacts **80** may be formed on the exterior of the housing **45** or on the interior of the housing **45** provided there is a port **78** in the housing **45** through which the sensor **42** can be directed to access the conductive contacts **80**.

In other embodiments, the housing **45** of the on-skin sensor control unit **44** is formed in at least two separate portions that fit together to form the housing **45**, for example, a base **74** and a cover **76**, as illustrated in FIGS. **14–16**. The two or more portions of the housing **45** may be entirely separate from each other. Alternatively, at least some of the two or more portions of the housing **45** may be connected together, for example, by a hinge, to facilitate the coupling of the portions to form the housing **45** of the on-skin sensor control unit **44**.

These two or more separate portions of the housing **45** of the on-skin sensor control unit **44** may have complementary, interlocking structures, such as, for example, interlocking ridges or a ridge on one component and a complementary groove on another component, so that the two or more separate components may be easily and/or firmly coupled together. This may be useful, particularly if the components are taken apart and fit together occasionally, for example, when a battery or sensor **42** is replaced. However, other fasteners may also be used to couple the two or more components together, including, for example, screws, nuts and bolts, nails, staples, rivets, or the like. In addition, adhesives, both permanent or temporary, may be used including, for example, contact adhesives, pressure sensitive adhesives, glues, epoxies, adhesive resins, and the like.

Typically, the housing **45** is at least water resistant to prevent the flow of fluids into contact with the components in the housing, including, for example, the conductive contacts **80**. Preferably, the housing is waterproof. In one

embodiment, two or more components of the housing **45**, for example, the base **74** and the cover **76**, fit together tightly to form a hermetic, waterproof, or water resistant seal so that fluids can not flow into the interior of the on-skin sensor control unit **44**. This may be useful to avoid corrosion currents and/or degradation of items within the on-skin sensor control unit **44**, such as the conductive contacts, the battery, or the electronic components, particularly when the patient engages in such activities as showering, bathing, or swimming.

Water resistant, as used herein, means that there is no penetration of water through a water resistant seal or housing when immersed in water at a depth of one meter at sea level. Waterproof, as used herein, means that there is no penetration of water through the waterproof seal or housing when immersed in water at a depth of ten meters, and preferably fifty meters, at sea level. It is often desirable that the electronic circuitry, power supply (e.g., battery), and conductive contacts of the on-skin sensor control unit, as well as the contact pads of the sensor, are contained in a water resistant, and preferably, a waterproof, environment.

In addition to the portions of the housing **45**, such as the base **74** and cover **76**, there may be other individually-formed pieces of the on-skin sensor control unit **44**, which may be assembled during or after manufacture. One example of an individually-formed piece is a cover for electronic components that fits a recess in the base **74** or cover **76**. Another example is a cover for a battery provided in the base **74** or cover **76**. These individually-formed pieces of the on-skin sensor control unit **44** may be permanently affixed, such as, for example, a cover for electronic components, or removably affixed, such as, for example, a removable cover for a battery, to the base **74**, cover **76**, or other component of the on-skin sensor control unit **44**. Methods for affixing these individually-formed pieces include the use of fasteners, such as screws, nuts and bolts, staples, nails, rivets, and the like, frictional fasteners, such as tongue and groove structures, and adhesives, such as contact adhesives, pressure sensitive adhesives, glues, epoxies, adhesive resins, and the like.

One embodiment of the on-skin sensor control unit **44** is a disposable unit complete with a battery for operating the unit. There are no portions of the unit that the patient needs to open or remove, thereby reducing the size of the unit and simplifying its construction. The on-skin sensor control unit **44** optionally remains in a sleep mode prior to use to conserve the battery's power. The on-skin sensor control unit **44** detects that it is being used and activates itself. Detection of use may be through a number of mechanisms. These include, for example, detection of a change in resistance across the electrical contacts, actuation of a switch upon mating the on-skin sensor control unit **44** with a mounting unit **77** (see FIGS. **27**A and **28**A). The on-skin sensor control unit **44** is typically replaced when it no longer operates within threshold limits, for example, if the battery or other power source does not generate sufficient power. Often this embodiment of the on-skin sensor control unit **44** has conductive contacts **80** on the exterior of the housing **45**. Once the sensor **42** is implanted in the patient, the sensor control unit **44** is placed over the sensor **42** with the conductive contacts **80** in contact with the contact pads **49** of the sensor **42**.

The on-skin sensor control unit **44** is typically attached to the skin **75** of the patient, as illustrated in FIG. **17**. The on-skin sensor control unit **44** may be attached by a variety of techniques including, for example, by adhering the on-skin sensor control unit **44** directly to the skin **75** of the patient with an adhesive provided on at least a portion of the housing **45** of the on-skin sensor control unit **44** which contacts the skin **75** or by suturing the on-skin sensor control unit **44** to the skin **75** through suture openings (not shown) in the sensor control unit **44**.

Another method of attaching the housing **45** of the on-skin sensor control unit **44** to the skin **75** includes using a mounting unit, **77**. The mounting unit **77** is often a part of the on-skin sensor control unit **44**. One example of a suitable mounting unit **77** is a double-sided adhesive strip, one side of which is adhered to a surface of the skin of the patient and the other side is adhered to the on-skin sensor control unit **44**. In this embodiment, the mounting unit **77** may have an optional opening **79** which is large enough to allow insertion of the sensor **42** through the opening **79**. Alternatively, the sensor may be inserted through a thin adhesive and into the skin.

A variety of adhesives may be used to adhere the on-skin sensor control unit **44** to the skin **75** of the patient, either directly or using the mounting unit **77**, including, for example, pressure sensitive adhesives (PSA) or contact adhesives. Preferably, an adhesive is chosen which is not irritating to all or a majority of patients for at least the period of time that a particular sensor **42** is implanted in the patient. Alternatively, a second adhesive or other skin-protecting compound may be included with the mounting unit so that a patient, whose skin is irritated by the adhesive on the mounting unit **77**, can cover his skin with the second adhesive or other skin-protecting compound and then place the mounting unit **77** over the second adhesive or other skin-protecting compound. This should substantially prevent the irritation of the skin of the patient because the adhesive on the mounting unit **77** is no longer in contact with the skin, but is instead in contact with the second adhesive or other skin-protecting compound.

When the sensor **42** is changed, the on-skin sensor control unit **44** may be moved to a different position on the skin **75** of the patient, for example, to avoid excessive irritation. Alternatively, the on-skin sensor control unit **44** may remain at the same place on the skin of the patient until it is determined that the unit **44** should be moved.

Another embodiment of a mounting unit **77** used in an on-skin sensor control unit **44** is illustrated in FIGS. **27**A and **27**B. The mounting unit **77** and a housing **45** of an on-skin sensor control unit **44** are mounted together in, for example, an interlocking manner, as shown in FIG. **27**A. The mounting unit **77** is formed, for example, using plastic or polymer materials, including, for example, polyvinyl chloride, polyethylene, polypropylene, polystyrene, ABS polymers, and copolymers thereof. The mounting unit **77** may be formed using a variety of techniques including, for example, injection molding, compression molding, casting, and other molding methods.

The mounting unit **77** typically includes an adhesive on a bottom surface of the mounting unit **77** to adhere to the skin of the patient or the mounting unit **77** is used in conjunction with, for example, double-sided adhesive tape or the like. The mounting unit **77** typically includes an opening **79** through which the sensor **42** is inserted, as shown in FIG. **27**B. The mounting unit **77** may also include a support structure **220** for holding the sensor **42** in place and against the conductive contacts **80** on the on-skin sensor control unit **42**. The mounting unit **77**, also, optionally, includes a positioning structure **222**, such as an extension of material from the mounting unit **77**, that corresponds to a structure (not shown), such as an opening, on the sensor **42** to facilitate proper positioning of the sensor **42**, for example, by aligning the two complementary structures.

In another embodiment, a coupled mounting unit **77** and housing **45** of an on-skin sensor control unit **44** is provided on an adhesive patch **204** with an optional cover **206** to protect and/or confine the housing **45** of the on-skin sensor control unit **44**, as illustrated in FIG. **28**A. The optional cover may contain an adhesive or other mechanism for attachment to the housing **45** and/or mounting unit **77**. The mounting unit **77** typically includes an opening **49** through which a sensor **42** is disposed, as shown in FIG. **28**B. The opening **49** may optionally be configured to allow insertion of the sensor **42** through the opening **49** using an insertion device **120** or insertion gun **200** (see FIG. **26**). The housing **45** of the on-skin sensor control unit **44** has a base **74** and a cover **76**, as illustrated in FIG. **28**C. A bottom view of the housing **45**, as shown in FIG. **28**D, illustrates ports **230** through which conductive contacts (not shown) extend to connect with contact pads on the sensor **42**. A board **232** for attachment of circuit components may optionally be provided within the on-skin sensor control unit **44**, as illustrated in FIG. **28**E.

In some embodiments, the adhesive on the on-skin sensor control unit **44** and/or on any of the embodiments of the mounting unit **77** is water resistant or waterproof to permit activities such as showering and/or bathing while maintaining adherence of the on-skin sensor control unit **44** to the skin **75** of the patient and, at least in some embodiments, preventing water from penetrating into the sensor control unit **44**. The use of a water resistant or waterproof adhesive combined with a water resistant or waterproof housing **45** protects the components in the sensor control unit **44** and the contact between the conductive contacts **80** and the sensor **42** from damage or corrosion. An example of a non-irritating adhesive that repels water is Tegaderm (3M, St. Paul, Minn.).

In one embodiment, the on-skin sensor control unit **44** includes a sensor port **78** through which the sensor **42** enters the subcutaneous tissue of the patient, as shown in FIGS. **14** to **16**. The sensor **42** may be inserted into the subcutaneous tissue of the patient through the sensor port **78**. The on-skin sensor control unit **44** may then be placed on the skin of the patient with the sensor **42** being threaded through the sensor port **78**. If the housing **45** of the sensor **42** has, for example, a base **74** and a cover **76**, then the cover **76** may be removed to allow the patient to guide the sensor **42** into the proper position for contact with the conductive contacts **80**.

Alternatively, if the conductive contacts **80** are within the housing **45** the patient may slide the sensor **42** into the housing **45** until contact is made between the contact pads **49** and the conductive contacts **80**. The sensor control unit **44** may have a structure which obstructs the sliding of the sensor **42** further into the housing once the sensor **42** is properly positioned with the contact pads **49** in contact with the conductive contacts **80**.

In other embodiments, the conductive contacts **80** are on the exterior of the housing **45** (see e.g., FIGS. **27**A–**27**B and **28**A–**28**E). In these embodiments, the patient guides the contacts pads **49** of the sensor **42** into contact with the conductive contacts **80**. In some cases, a guiding structure may be provided on the housing **45** which guides the sensor **42** into the proper position. An example of such a structure includes a set of guiding rails extending from the housing **45** and having the shape of the sensor **42**.

In some embodiments, when the sensor **42** is inserted using an insertion device **120** (see FIG. **12**), the tip of the insertion device **120** or optional insertion gun **200** (see FIG. **26**) is positioned against the skin or the mounting unit **77** at the desired insertion point. In some embodiments, the insertion device **120** is positioned on the skin without any guide. In other embodiments, the insertion device **120** or insertion gun **200** is positioned using guides (not shown) in the mounting unit **77** or other portion of the on-skin sensor control unit **44**. In some embodiments, the guides, opening **79** in the mounting unit **77** and/or sensor port **78** in the housing **45** of the on-skin sensor control unit **44** have a shape which is complementary to the shape of the tip of the insertion device **120** and/or insertion gun **200** to limit the orientation of the insertion device **120** and/or insertion gun **200** relative to the opening **79** and/or sensor port **78**. The sensor can then be subcutaneously inserted into the patient by matching the complementary shape of the opening **79** or sensor port **78** with the insertion device **120** and/or insertion gun **200**.

In some embodiments, the shapes of a) the guides, opening **79**, or sensor port **78**, and (b) the insertion device **120** or insertion gun **200** are configured such that the two shapes can only be matched in a single orientation. This aids in inserting the sensor **42** in the same orientation each time a new sensor is inserted into the patient. This uniformity in insertion orientation may be required in some embodiments to ensure that the contact pads **49** on the sensor **42** are correctly aligned with appropriate conductive contacts **80** on the on-skin sensor control unit **44**. In addition, the use of the insertion gun, as described above, may ensure that the sensor **42** is inserted at a uniform, reproducible depth.

The sensor **42** and the electronic components within the on-skin sensor control unit **44** are coupled via conductive contacts **80**, as shown in FIGS. **14**–**16**. The one or more working electrodes **58**, counter electrode **60** (or counter/reference electrode), optional reference electrode **62**, and optional temperature probe **66** are attached to individual conductive contacts **80**. In the illustrated embodiment of FIGS. **14**–**16**, the conductive contacts **80** are provided on the interior of the on-skin sensor control unit **44**. Other embodiments of the on-skin sensor control unit **44** have the conductive contacts disposed on the exterior of the housing **45**. The placement of the conductive contacts **80** is such that they are in contact with the contact pads **49** on the sensor **42** when the sensor **42** is properly positioned within the on-skin sensor control unit **44**.

In the illustrated embodiment of FIGS. **14**–**16**, the base **74** and cover **76** of the on-skin sensor control unit **44** are formed such that, when the sensor **42** is within the on-skin sensor control unit **44** and the base **74** and cover **76** are fitted together, the sensor **42** is bent. In this manner, the contact pads **49** on the sensor **42** are brought into contact with the conductive contacts **80** of the on-skin sensor control unit **44**. The on-skin sensor control unit **44** may optionally contain a support structure **82** to hold, support, and/or guide the sensor **42** into the correct position.

Non-limiting examples of suitable conductive contacts **80** are illustrated in FIGS. **19**A–**19**D. In one embodiment, the conductive contacts **80** are pins **84** or the like, as illustrated in FIG. **19**A, which are brought into contact with the contact pads **49** on the sensor **42** when the components of the on-skin sensor control unit **44**, for example, the base **74** and cover **76**, are fitted together. A support **82** may be provided under the sensor **42** to promote adequate contact between the contact pads **49** on the sensor **42** and the pins **84**. The pins are typically made using a conductive material, such as a metal or alloy, for example, copper, stainless steel, or silver. Each pin has a distal end that extends from the on-skin sensor control unit **44** for contacting the contact pads **49** on the sensor **42**. Each pin **84** also has a proximal end that is coupled to a wire or other conductive strip that is, in turn,

coupled to the rest of the electronic components (e.g., the voltage source **95** and measurement circuit **96** of FIGS. **18**A and **18**B) within the on-skin sensor control unit **44**. Alternatively, the pins **84** may be coupled directly to the rest of the electronics.

In another embodiment, the conductive contacts **80** are formed as a series of conducting regions **88** with interspersed insulating regions **90**, as illustrated in FIG. **19**B. The conducting regions **88** may be as large or larger than the contact pads **49** on the sensor **42** to alleviate registration concerns. However, the insulating regions **90** should have sufficient width so that a single conductive region **88** does not overlap with two contact pads **49** as determined based on the expected variation in the position of the sensor **42** and contact pads **49** with respect to the conductive contacts **80**. The conducting regions **88** are formed using materials such as metals, alloys, or conductive carbon. The insulating regions **90** may be formed using known insulating materials including, for example, insulating plastic or polymer materials.

In a further embodiment, a unidirectional conducting adhesive **92** may be used between the contact pads **49** on the sensor **42** and conductive contacts **80** implanted or otherwise formed in the on-skin sensor control unit **44**, as shown in FIG. **19**C.

In yet another embodiment, the conductive contacts **80** are conductive members **94** that extend from a surface of the on-skin sensor control unit **44** to contact the contact pads **49**, as shown in FIG. **19**D. A variety of different shapes may be used for these members, however, they should be electrically insulated from each other. The conductive members **94** may be made using metal, alloy, conductive carbon, or conducting plastics and polymers.

Any of the exemplary conductive contacts **80** described above may extend from either the upper surface of the interior of the on-skin sensor control unit **44**, as illustrated in FIG. **19**A–**19**C, or from the lower surface of the interior of the on-skin sensor control unit **44**, as illustrated in FIG. **19**D, or from both the upper and lower surfaces of the interior of the on-skin sensor control unit **44**, particularly when the sensor **42** has contact pads **49** on both sides of the sensor.

Conductive contacts **80** on the exterior of the housing **45** may also have a variety of shapes as indicated in FIGS. **19**E and **19**F. For example, the conductive contacts **80** may be embedded in (FIG. **19**E) or extending out of (FIG. **19**F) the housing **45**.

The conductive contacts **80** are preferably made using a material which will not corrode due to contact with the contact pads **49** of the sensor **42**. Corrosion may occur when two different metals are brought in contact. Thus, if the contact pads **49** are formed using carbon then the preferred conductive contacts **80** may be made using any material, including metals or alloys. However, if any of the contact pads **49** are made with a metal or alloy then the preferred conductive contacts **80** for coupling with the metallic contact pads are made using a non-metallic conductive material, such as conductive carbon or a conductive polymer, or the conductive contacts **80** and the contact pads **49** are separated by a non-metallic material, such as a unidirectional conductive adhesive.

In one embodiment, electrical contacts are eliminated between the sensor **42** and the on-skin sensor control unit **44**. Power is transmitted to the sensor via inductive coupling, using, for example, closely space antennas (e.g., facing coils) (not shown) on the sensor and the on-skin sensor control unit. Changes in the electrical characteristics of the sensor control unit **44** (e.g., current) induce a changing magnetic field in the proximity of the antenna. The changing magnetic field induces a current in the antenna of the sensor. The close proximity of the sensor and on-skin sensor control unit results in reasonably efficient power transmission. The induced current in the sensor may be used to power potentiostats, operational amplifiers, capacitors, integrated circuits, transmitters, and other electronic components built into the sensor structure. Data is transmitted back to the sensor control unit, using, for example, inductive coupling via the same or different antennas and/or transmission of the signal via a transmitter on the sensor. The use of inductive coupling can eliminate electrical contacts between the sensor and the on-skin sensor control unit. Such contacts are commonly a source of noise and failure. Moreover, the sensor control unit may then be entirely sealed which may increase the waterproofing of the on-skin sensor control unit.

An exemplary on-skin sensor control unit **44** can be prepared and used in the following manner. A mounting unit **77** having adhesive on the bottom is applied to the skin. An insertion gun **200** (see FIG. **26**) carrying the sensor **42** and the insertion device **120** is positioned against the mounting unit **77**. The insertion gun **200** and mounting unit **77** are optionally designed such that there is only one position in which the two properly mate. The insertion gun **200** is activated and a portion of the sensor **42** and optionally a portion of the insertion device **120** are driven through the skin into, for example, the subcutaneous tissue. The insertion gun **200** withdraws the insertion device **200**, leaving the portion of the sensor **42** inserted through the skin. The housing **45** of the on-skin control unit **44** is then coupled to the mounting unit **77**. Optionally, the housing **45** and the mounting unit **77** are formed such that there is only one position in which the two properly mate. The mating of the housing **45** and the mounting unit **77** establishes contact between the contact pads **49** (see e.g., FIG. **2**) on the sensor **42** and the conductive contacts **80** on the on-skin sensor control unit **44**. Optionally, this action activates the on-skin sensor control unit **44** to begin operation.

On-Skin Control Unit Electronics

The on-skin sensor control unit **44** also typically includes at least a portion of the electronic components that operate the sensor **42** and the analyte monitoring device system **40**. One embodiment of the electronics in the on-skin control unit **44** is illustrated as a block diagram in FIG. **18**A. The electronic components of the on-skin sensor control unit **44** typically include a power supply **95** for operating the on-skin control unit **44** and the sensor **42**, a sensor circuit **97** for obtaining signals from and operating the sensor **42**, a measurement circuit **96** that converts sensor signals to a desired format, and a processing circuit **109** that, at minimum, obtains signals from the sensor circuit **97** and/or measurement circuit **96** and provides the signals to an optional transmitter **98**. In some embodiments, the processing circuit **109** may also partially or completely evaluate the signals from the sensor **42** and convey the resulting data to the optional transmitter **98** and/or activate an optional alarm system **94** (see FIG. **18**B) if the analyte level exceeds a threshold. The processing circuit **109** often includes digital logic circuitry.

The on-skin sensor control unit **44** may optionally contain a transmitter **98** for transmitting the sensor signals or processed data from the processing circuit **109** to a receiver/display unit **46**, **48**; a data storage unit **102** for temporarily or permanently storing data from the processing circuit **109**; a temperature probe circuit **99** for receiving signals from and operating a temperature probe **66**; a reference voltage gen-

erator **101** for providing a reference voltage for comparison with sensor-generated signals; and/or a watchdog circuit **103** that monitors the operation of the electronic components in the on-skin sensor control unit **44**.

Moreover, the sensor control unit **44** often includes digital and/or analog components utilizing semiconductor devices, such as transistors. To operate these semiconductor devices, the on-skin control unit **44** may include other components including, for example, a bias control generator **105** to correctly bias analog and digital semiconductor devices, an oscillator **107** to provide a clock signal, and a digital logic and timing component **109** to provide timing signals and logic operations for the digital components of the circuit.

As an example of the operation of these components, the sensor circuit **97** and the optional temperature probe circuit **99** provide raw signals from the sensor **42** to the measurement circuit **96**. The measurement circuit **96** converts the raw signals to a desired format, using for example, a current-to-voltage converter, current-to-frequency converter, and/or a binary counter or other indicator that produces a signal proportional to the absolute value of the raw signal. This may be used, for example, to convert the raw signal to a format that can be used by digital logic circuits. The processing circuit **109** may then, optionally, evaluate the data and provide commands to operate the electronics.

FIG. **18**B illustrates a block diagram of another exemplary on-skin control unit **44** that also includes optional components such as a receiver **99** to receive, for example, calibration data; a calibration storage unit **100** to hold, for example, factory-set calibration data, calibration data obtained via the receiver **99** and/or operational signals received, for example, from a receiver/display unit **46**, **48** or other external device; an alarm system **104** for warning the patient; and a deactivation switch **111** to turn off the alarm system.

Functions of the analyte monitoring system **40** and the sensor control unit **44** may be implemented using either software routines, hardware components, or combinations thereof. The hardware components may be implemented using a variety of technologies, including, for example, integrated circuits or discrete electronic components. The use of integrated circuits typically reduces the size of the electronics, which in turn may result in a smaller on-skin sensor control unit **44**.

The electronics in the on-skin sensor control unit **44** and the sensor **42** are operated using a power supply **95**. One example of a suitable power supply **95** is a battery, for example, a thin circular battery, such as those used in many watches, hearing aids, and other small electronic devices. Preferably, the battery has a lifetime of at least 30 days, more preferably, a lifetime of at least three months, and most preferably, a lifetime of at least one year. The battery is often one of the largest components in the on-skin control unit **44**, so it is often desirable to minimize the size of the battery. For example, a preferred battery's thickness is 0.5 mm or less, preferably 35 mm or less, and most preferably 0.2 mm or less. Although multiple batteries may be used, it is typically preferred to use only one battery.

The sensor circuit **97** is coupled via the conductive contacts **80** of the sensor control unit **44** to one or more sensors **42**, **42'**. Each of the sensors represents, at minimum, a working electrode **58**, a counter electrode **60** (or counter/reference electrode), and an optional reference electrode **62**. When two or more sensors **42**, **42'** are used, the sensors typically have individual working electrodes **58**, but may share a counter electrode **60**, counter/reference electrode, and/or reference electrode **52**.

The sensor circuit **97** receives signals from and operates the sensor **42** or sensors **42**, **42'**. The sensor circuit **97** may obtain signals from the sensor **42** using amperometric, coulometric, potentiometric, voltammetric, and/or other electrochemical techniques. The sensor circuit **97** is exemplified herein as obtaining amperometric signals from the sensor **42**, however, it will be understood that the sensor circuit can be appropriately configured for obtaining signals using other electrochemical techniques. To obtain amperometric measurements, the sensor circuit **97** typically includes a potentiostat that provides a constant potential to the sensor **42**. In other embodiments, the sensor circuit **97** includes an amperostat that supplies a constant current to the sensor **42** and can be used to obtain coulometric or potentiometric measurements.

The signal from the sensor **42** generally has at least one characteristic, such as, for example, current, voltage, or frequency, which varies with the concentration of the analyte. For example, if the sensor circuit **97** operates using amperometry, then the signal current varies with analyte concentration. The measurement circuit **96** may include circuitry which converts the information-carrying portion of the signal from one characteristic to another. For example, the measurement circuit **96** may include a current-to-voltage or current-to-frequency converter. The purpose of this conversion may be to provide a signal that is, for example, more easily transmitted, readable by digital circuits, and/or less susceptible to noise contributions.

One example of a standard current-to-voltage converter is provided in FIG. **20**A. In this converter, the signal from the sensor **42** is provided at one input terminal **134** of an operational amplifier **130** ("op amp") and coupled through a resistor **138** to an output terminal **136**. This particular current-to-voltage converter **131** may, however, be difficult to implement in a small CMOS chip because resistors are often difficult to implement on an integrated circuit. Typically, discrete resistor components are used. However, the used of discrete components increases the space needed for the circuitry.

An alternative current-to-voltage converter **141** is illustrated in FIG. **20**B. This converter includes an op amp **140** with the signal from the sensor **42** provided at input terminal **144** and a reference potential provided at input terminal **142**. A capacitor **145** is placed between the input terminal **144** and the output terminal **146**. In addition, switches **147***a*, **147***b*, **149***a*, and **149***b* are provided to allow the capacitor to charge and discharge at a rate determined by a clock (CLK) frequency. In operation, during one half cycle, switches **147***a* and **147***b* close and switches **149***a* and **149***b* open allowing the capacitor **145** to charge due to the attached potential VI. During the other half cycle, switches **147***a* and **147***b* open and switches **149***a* and **149***b* close to ground and allow the capacitor **145** to partially or fully discharge. The reactive impedance of the capacitor **145** is analogous to the resistance of the resistor **138** (see FIG. **20**A), allowing the capacitor **145** to emulate a resistor. The value of this "resistor" depends on the capacitance of the capacitor **145** and the clock frequency. By altering the clock frequency, the reactive impedance ("resistance value") of the capacitor changes. The value of the impedance ("resistance") of the capacitor **145** may be altered by changing the clock frequency. Switches **147***a*, **147***b*, **149***a*, and **149***b* may be implemented in a CMOS chip using, for example, transistors.

A current-to-frequency converter may also be used in the measurement circuit **96**. One suitable current-to-frequency converter includes charging a capacitor using the signal

from the sensor **42**. When the potential across the capacitor exceeds a threshold value, the capacitor is allowed to discharge. Thus, the larger the current from the sensor **42**, the quicker the threshold potential is achieved. This results in a signal across the capacitor that has an alternating characteristic, corresponding to the charging and discharging of the capacitor, having a frequency which increases with an increase in current from the sensor **42**.

In some embodiments, the analyte monitoring system **40** includes two or more working electrodes **58** distributed over one or more sensors **42**. These working electrodes **58** may be used for quality control purposes. For example, the output signals and/or analyzed data derived using the two or more working electrodes **58** may be compared to determine if the signals from the working electrodes agree within a desired level of tolerance. If the output signals do not agree, then the patient may be alerted to replace the sensor or sensors. In some embodiments, the patient is alerted only if the lack of agreement between the two sensors persists for a predetermined period of time. The comparison of the two signals may be made for each measurement or at regular intervals. Alternatively or additionally, the comparison may be initiated by the patient or another person. Moreover, the signals from both sensors may be used to generate data or one signal may be discarded after the comparison.

Alternatively, if, for example, two working electrodes **58** have a common counter electrode **60** and the analyte concentration is measured by amperometry, then the current at the counter electrode **60** should be twice the current at each of the working electrodes, within a predetermined tolerance level, if the working electrodes are operating properly. If not, then the sensor or sensors should be replaced, as described above.

An example of using signals from only one working electrode for quality control includes comparing consecutive readings obtained using the single working electrode to determine if they differ by more than a threshold level. If the difference is greater than the threshold level for one reading or over a period of time or for a predetermined number of readings within a period of time then the patient is alerted to replace the sensor **42**. Typically, the consecutive readings and/or the threshold level are determined such that all expected excursions of the sensor signal are within the desired parameters (i.e., the sensor control unit **44** does not consider true changes in analyte concentration to be a sensor failure).

The sensor control unit **44** may also optionally include a temperature probe circuit **99**. The temperature probe circuit **99** provides a constant current through (or constant potential) across the temperature probe **66**. The resulting potential (or current) varies according to the resistance of the temperature dependent element **72**.

The output from the sensor circuit **97** and optional temperature probe circuit is coupled into a measurement circuit **96** that obtains signals from the sensor circuit **97** and optional temperature probe circuit **99** and, at least in some embodiments, provides output data in a form that, for example can be read by digital circuits. The signals from the measurement circuit **96** are sent to the processing circuit **109**, which in turn may provide data to an optional transmitter **98**. The processing circuit **109** may have one or more of the following functions: 1) transfer the signals from the measurement circuit **96** to the transmitter **98**, 2) transfer signals from the measurement circuit **96** to the data storage circuit **102**, 3) convert the information-carrying characteristic of the signals from one characteristic to another (when, for example, that has not been done by the measurement circuit **96**), using, for example, a current-to-voltage converter, a current-to-frequency converter, or a voltage-to-current converter, 4) modify the signals from the sensor circuit **97** using calibration data and/or output from the temperature probe circuit **99**, 5) determine a level of an analyte in the interstitial fluid, 6) determine a level of an analyte in the bloodstream based on the sensor signals obtained from interstitial fluid, 7) determine if the level, rate of change, and/or acceleration in the rate of change of the analyte exceeds or meets one or more threshold values, 8) activate an alarm if a threshold value is met or exceeded, 9) evaluate trends in the level of an analyte based on a series of sensor signals, 10) determine a dose of a medication, and 11) reduce noise and/or errors, for example, through signal averaging or comparing readings from multiple working electrodes **58**.

The processing circuit **109** may be simple and perform only one or a small number of these functions or the processing circuit **109** may be more sophisticated and perform all or most of these functions. The size of the on-skin sensor control unit **44** may increase with the increasing number of functions and complexity of those functions that the processing circuit **109** performs. Many of these functions may not be performed by a processing circuit **109** in the on-skin sensor control unit **44**, but may be performed by another analyzer **152** in the receiver/display units **46**, **48** (see FIG. **22**).

One embodiment of the measurement circuit **96** and/or processing circuit **109** provides as output data, the current flowing between the working electrode **58** and the counter electrode **60**. The measurement circuit **96** and/or processing circuit **109** may also provide as output data a signal from the optional temperature probe **66** which indicates the temperature of the sensor **42**. This signal from the temperature probe **66** may be as simple as a current through the temperature probe **66** or the processing circuit **109** may include a device that determines a resistance of the temperature probe **66** from the signal obtained from the measurement circuit **96** for correlation with the temperature of the sensor **42**. The output data may then be sent to a transmitter **98** that then transmits this data to at least one receiver/display device **46**,**48**.

Returning to the processing circuit **109**, in some embodiments processing circuit **109** is more sophisticated and is capable of determining the analyte concentration or some measure representative of the analyte concentration, such as a current or voltage value. The processing circuit **109** may incorporate the signal of the temperature probe to make a temperature correction in the signal or analyzed data from the working electrode **58**. This may include, for example, scaling the temperature probe measurement and adding or subtracting the scaled measurement to the signal or analyzed data from the working electrode **58**. The processing circuit **109** may also incorporate calibration data which has been received from an external source or has been incorporated into the processing circuit **109**, both of which are described below, to correct the signal or analyzed data from the working electrode **58**. Additionally, the processing circuit **109** may include a correction algorithm for converting interstitial analyte level to blood analyte level. The conversion of interstitial analyte level to blood analyte level is described, for example, in Schmidtke, et al., "Measurement and Modeling of the Transient Difference Between Blood and Subcutaneous Glucose Concentrations in the Rat after Injection of Insulin", Proc. of the Nat'l Acad. of Science, 95, 294–299 (1998) and Quinn, et al., "Kinetics of Glucose Delivery to Subcutaneous Tissue in Rats Measured with 0.3

mm Amperometric Microsensors", Am. J. Physiol., 269 (Endocrinol. Metab. 32), E155–E161 (1995), incorporated herein by reference.

In some embodiments, the data from the processing circuit **109** is analyzed and directed to an alarm system **94** (see FIG. **18**B) to warn the user. In at least some of these embodiments, a transmitter is not used as the sensor control unit performs all of the needed functions including analyzing the data and warning the patient.

However, in many embodiments, the data (e.g., a current signal, a converted voltage or frequency signal, or fully or partially analyzed data) from processing circuit **109** is transmitted to one or more receiver/display units **46**, **48** using a transmitter **98** in the on-skin sensor control unit **44**. The transmitter has an antenna **93**, such as a wire or similar conductor, formed in the housing **45**. The transmitter **98** is typically designed to transmit a signal up to about 2 meters or more, preferably up to about 5 meters or more, and more preferably up to about 10 meters or more, when transmitting to a small receiver/display unit **46**, such as a palm-size, belt-worn receiver. The effective range is longer when transmitting to a unit with a better antenna, such as a bedside receiver. As described in detail below, suitable examples of receiver/display units **46**, **48** include units that can be easily worn or carried or units that can be placed conveniently on, for example, a nightstand when the patient is sleeping.

The transmitter **98** may send a variety of different signals to the receiver/display units **46**, **48**, typically, depending on the sophistication of the processing circuit **109**. For example, the processing circuit **109** may simply provide raw signals, for example, currents from the working electrodes **58**, without any corrections for temperature or calibration, or the processing circuit **109** may provide converted signals which are obtained, for example, using a current-to-voltage converter **131** or **141** or a current-to-frequency converter. The raw measurements or converted signals may then be processed by an analyzer **152** (see FIG. **22**) in the receiver/display units **46**, **48** to determine the level of an analyte, optionally using temperature and calibration corrections. In another embodiment, the processing circuit **109** corrects the raw measurements using, for example, temperature and/or calibration information and then the transmitter **98** sends the corrected signal, and optionally, the temperature and/or calibration information, to the receiver/display units **46**, **48**. In yet another embodiment, the processing circuit **109** calculates the analyte level in the interstitial fluid and/or in the blood (based on the interstitial fluid level) and transmits that information to the one or more receiver/display units **46**, **48**, optionally with any of the raw data and/or calibration or temperature information. In a further embodiment, the processing circuit **109** calculates the analyte concentration, but the transmitter **98** transmits only the raw measurements, converted signals, and/or corrected signals.

One potential difficulty that may be experienced with the on-skin sensor control unit **44** is a change in the transmission frequency of the transmitter **98** over time. To overcome this potential difficulty, the transmitter may include optional circuitry that can return the frequency of the transmitter **98** to the desired frequency or frequency band. One example of suitable circuitry is illustrated in FIG. **21** as a block diagram of an open loop modulation system **200**. The open loop modulation system **200** includes a phase detector (PD) **210**, a charge pump (CHGPMP) **212**, a loop filter (L.F.) **214**, a voltage controlled oscillator (VCO) **216**, and a divide by M circuit (÷M) **218** to form the phase-locked loop **220**.

The analyte monitoring device **40** uses an open loop modulation system **200** for RF communication between the transmitter **98** and a receiver of, for example, the one or more receiver/display units **46**, **48**. This open loop modulation system **230** is designed to provide a high reliability RF link between a transmitter and its associated receiver. The system employs frequency modulation (FM), and locks the carrier center frequency using a conventional phase-locked loop (PLL) **220**. In operation, the phase-locked loop **220** is opened prior to the modulation. During the modulation the phase-locked loop **220** remains open for as long as the center frequency of the transmitter is within the receiver's bandwidth. When the transmitter detects that the center frequency is going to move outside of the receiver bandwidth, the receiver is signaled to stand by while the center frequency is captured. Subsequent to the capture, the transmission will resume. This cycle of capturing the center frequency, opening the phase-locked loop **220**, modulation, and recapturing the center frequency will repeat for as many cycles as required.

The loop control **240** detects the lock condition of the phase-locked loop **220** and is responsible for closing and opening the phase-locked loop **220**. The totalizer **250** in conjunction with the loop control **240**, detects the status of the center frequency. The modulation control **230** is responsible for generating the modulating signal. A transmit amplifier **260** is provided to ensure adequate transmit signal power. The reference frequency is generated from a very stable signal source (not shown), and is divided down by N through the divide by N block (÷N) **270**. Data and control signals are received by the open loop modulation system **200** via the DATA BUS **280**, and the CONTROL BUS **290**.

The operation of the open loop modulation system **200** begins with the phase-locked loop **220** in closed condition. When the lock condition is detected by the loop control **240**, the phase-locked loop **220** is opened and the modulation control **230** begins generating the modulating signal. The totalizer **250** monitors the VCO frequency (divided by M), for programmed intervals. The monitored frequency is compared to a threshold programmed in the totalizer **250**. This threshold corresponds to the **3**dB cut off frequencies of the receiver's intermediate frequency stage. When the monitored frequency approaches the thresholds, the loop control **240** is notified and a stand-by code is transmitted to the receiver and the phase-locked loop **220** is closed.

At this point the receiver is in the wait mode. The loop control **240** in the transmitter closes the phase-locked loop **220**. Then, modulation control **230** is taken off line, the monitored value of the totalizer **250** is reset, and the phase-locked loop **220** is locked. When the loop control **240** detects a lock condition, the loop control **240** opens the phase-locked loop **220**, the modulation control **230** is brought on line and the data transmission to the receiver will resume until the center frequency of the phase-locked loop **220** approaches the threshold values, at which point the cycle of transmitting the stand-by code begins. The ÷N **270** and ÷M **218** block set the frequency channel of the transmitter.

Accordingly, the open loop modulation system **200** provides a reliable low power FM data transmission for an analyte monitoring system. The open loop modulation system **200** provides a method of wide band frequency modulation, while the center frequency of the carrier is kept within receiver bandwidth. The effect of parasitic capacitors and inductors pulling the center frequency of the transmitter is corrected by the phase-locked loop **220**. Further, the totalizer **250** and loop control **240** provide a new method of center frequency drift detection. Finally, the open loop modulation system **200** is easily implemented in CMOS process.

The rate at which the transmitter **98** transmits data may be the same rate at which the sensor circuit **97** obtains signals and/or the processing circuit **109** provides data or signals to the transmitter **98**. Alternatively, the transmitter **98** may transmit data at a slower rate. In this case, the transmitter **98** may transmit more than one datapoint in each transmission. Alternatively, only one datapoint may be sent with each data transmission, the remaining data not being transmitted. Typically, data is transmitted to the receiver/display unit **46**, **48** at least every hour, preferably, at least every fifteen minutes, more preferably, at least every five minutes, and most preferably, at least every one minute. However, other data transmission rates may be used. In some embodiments, the processing circuit **109** and/or transmitter **98** are configured to process and/or transmit data at a faster rate when a condition is indicated, for example, a low level or high level of analyte or impending low or high level of analyte. In these embodiments, the accelerated data transmission rate is typically at least every five minutes and preferably at least every minute.

In addition to a transmitter **98**, an optional receiver **99** may be included in the on-skin sensor control unit **44**. In some cases, the transmitter **98** is a transceiver, operating as both a transmitter and a receiver. The receiver **99** may be used to receive calibration data for the sensor **42**. The calibration data may be used by the processing circuit **109** to correct signals from the sensor **42**. This calibration data may be transmitted by the receiver/display unit **46**, **48** or from some other source such as a control unit in a doctor's office. In addition, the optional receiver **99** may be used to receive a signal from the receiver/display units **46**, **48**, as described above, to direct the transmitter **98**, for example, to change frequencies or frequency bands, to activate or deactivate the optional alarm system **94** (as described below), and/or to direct the transmitter **98** to transmit at a higher rate.

Calibration data may be obtained in a variety of ways. For instance, the calibration data may simply be factory-determined calibration measurements which can be input into the on-skin sensor control unit **44** using the receiver **99** or may alternatively be stored in a calibration data storage unit **100** within the on-skin sensor control unit **44** itself (in which case a receiver **99** may not be needed). The calibration data storage unit **100** may be, for example, a readable or readable/writeable memory circuit.

Alternative or additional calibration data may be provided based on tests performed by a doctor or some other professional or by the patient himself. For example, it is common for diabetic individuals to determine their own blood glucose concentration using commercially available testing kits. The results of this test is input into the on-skin sensor control unit **44** either directly, if an appropriate input device (e.g., a keypad, an optical signal receiver, or a port for connection to a keypad or computer) is incorporated in the on-skin sensor control unit **44**, or indirectly by inputting the calibration data into the receiver/display unit **46**, **48** and transmitting the calibration data to the on-skin sensor control unit **44**.

Other methods of independently determining analyte levels may also be used to obtain calibration data. This type of calibration data may supplant or supplement factory-determined calibration values.

In some embodiments of the invention, calibration data may be required at periodic intervals, for example, every eight hours, once a day, or once a week, to confirm that accurate analyte levels are being reported. Calibration may also be required each time a new sensor **42** is implanted or if the sensor exceeds a threshold minimum or maximum value or if the rate of change in the sensor signal exceeds a threshold value. In some cases, it may be necessary to wait a period of time after the implantation of the sensor **42** before calibrating to allow the sensor **42** to achieve equilibrium. In some embodiments, the sensor **42** is calibrated only after it has been inserted. In other embodiments, no calibration of the sensor **42** is needed.

The on-skin sensor control unit **44** and/or a receiver/display unit **46**, **48** may include an auditory or visual indicator that calibration data is needed, based, for example, on a predetermined periodic time interval between calibrations or on the implantation of a new sensor **42**. The on-skin sensor control unit **44** and/or receiver display/units **46**, **48** may also include an auditory or visual indicator to remind the patient that information, such as analyte levels, reported by the analyte monitoring device **40**, may not be accurate because a calibration of the sensor **42** has not been performed within the predetermined periodic time interval and/or after implantation of a new sensor **42**.

The processing circuit **109** of the on-skin sensor control unit **44** and/or an analyzer **152** of the receiver/display unit **46**, **48** may determine when calibration data is needed and if the calibration data is acceptable. The on-skin sensor control unit **44** may optionally be configured to not allow calibration or to reject a calibration point if, for example, 1) a temperature reading from the temperature probe indicates a temperature that is not within a predetermined acceptable range (e.g., 30 to 42° C. or 32 to 40° C.) or that is changing rapidly (for example, 0.2° C./minute, 0.5° C./minute, or 0.7° C./minute or greater); 2) two or more working electrodes **58** provide uncalibrated signals that are not within a predetermined range(e.g., within 10% or 20%) of each other; 3) the rate of change of the uncalibrated signal is above a threshold rate (e.g., 0.25 mg/dL per minute or 0.5 mg/dL per minute or greater); 4) the uncalibrated signal exceeds a threshold maximum value (e.g., 5, 10, 20, or 40 nA) or is below a threshold minimum value (e.g., 0.05, 0.2, 0.5, or 1 nA); 5) the calibrated signal exceeds a threshold maximum value (e.g., a signal corresponding to an analyte concentration of 200 mg/dL, 250 mg/dL, or 300 mg/dL) or is below a threshold minimum value (e.g., a signal corresponding to an analyte concentration of 50 mg/dL, 65 mg/dL, or 80 mg/dL); and/or 6) an insufficient among of time has elapsed since implantation (e.g., 10 minutes or less, 20 minutes or less, or 30 minutes or less).

The processing circuit **109** or an analyzer **152** may also request another calibration point if the values determined using the sensor data before and after the latest calibration disagree by more than a threshold amount, indicating that the calibration may be incorrect or that the sensor characteristics have changed radically between calibrations. This additional calibration point may indicate the source of the difference.

The on-skin sensor control unit **44** may include an optional data storage unit **102** which may be used to hold data (e.g., measurements from the sensor or processed data) from the processing circuit **109** permanently or, more typically, temporarily. The data storage unit **102** may hold data so that the data can be used by the processing circuit **109** to analyze and/or predict trends in the analyte level, including, for example, the rate and/or acceleration of analyte level increase or decrease. The data storage unit **102** may also or alternatively be used to store data during periods in which a receiver/display unit **46**, **48** is not within range. The data storage unit **102** may also be used to store data when the transmission rate of the data is slower than the acquisition rate of the data. For example, if the data acqui-

sition rate is 10 points/min and the transmission is 2 transmissions/min, then one to five points of data could be sent in each transmission depending on the desired rate for processing datapoints. The data storage unit **102** typically includes a readable/writeable memory storage device and typically also includes the hardware and/or software to write to and/or read the memory storage device.

The on-skin sensor control unit **44** may include an optional alarm system **104** that, based on the data from the processing circuit **109**, warns the patient of a potentially detrimental condition of the analyte. For example, if glucose is the analyte, than the on-skin sensor control unit **44** may include an alarm system **104** that warns the patient of conditions such as hypoglycemia, hyperglycemia, impending hypoglycemia, and/or impending hyperglycemia. The alarm system **104** is triggered when the data from the processing circuit **109** reaches or exceeds a threshold value. Examples of threshold values for blood glucose levels are about 60, 70, or 80 mg/dL for hypoglycemia; about 70, 80, or 90 mg/dL for impending hypoglycemia; about 130, 150, 175, 200, 225, 250, or 275 mg/dL for impending hyperglycemia; and about 150, 175, 200, 225, 250, 275, or 300 mg/dL for hyperglycemia. The actual threshold values that are designed into the alarm system **104** may correspond to interstitial fluid glucose concentrations or electrode measurements (e.g., current values or voltage values obtained by conversion of current measurements) that correlate to the above-mentioned blood glucose levels. The analyte monitor device may be configured so that the threshold levels for these or any other conditions may be programmable by the patient and/or a medical professional.

A threshold value is exceeded if the datapoint has a value that is beyond the threshold value in a direction indicating a particular condition. For example, a datapoint which correlates to a glucose level of 200 mg/dL exceeds a threshold value for hyperglycemia of 180 mg/dL, because the datapoint indicates that the patient has entered a hyperglycemic state. As another example, a datapoint which correlates to a glucose level of 65 mg/dL exceeds a threshold value for hypoglycemia of 70 mg/dL because the datapoint indicates that the patient is hypoglycemic as defined by the threshold value. However, a datapoint which correlates to a glucose level of 75 mg/dL would not exceed the same threshold value for hypoglycemia because the datapoint does not indicate that particular condition as defined by the chosen threshold value.

An alarm may also be activated if the sensor readings indicate a value that is beyond a measurement range of the sensor **42**. For glucose, the physiologically relevant measurement range is typically about 50 to 250 mg/dL, preferably about 40–300 mg/dL and ideally 30–400 mg/dL, of glucose in the interstitial fluid.

The alarm system **104** may also, or alternatively, be activated when the rate of change or acceleration of the rate of change in analyte level increase or decrease reaches or exceeds a threshold rate or acceleration. For example, in the case of a subcutaneous glucose monitor, the alarm system might be activated if the rate of change in glucose concentration exceeds a threshold value which might indicate that a hyperglycemic or hypoglycemic condition is likely to occur.

The optional alarm system **104** may be configured to activate when a single data point meets or exceeds a particular threshold value. Alternatively, the alarm may be activated only when a predetermined number of datapoints spanning a predetermined amount of time meet or exceed the threshold value. As another alternative, the alarm may be activated only when the datapoints spanning a predetermined amount of time have an average value which meets or exceeds the threshold value. Each condition that can trigger an alarm may have a different alarm activation condition. In addition, the alarm activation condition may change depending on current conditions (e.g., an indication of impending hyperglycemia may alter the number of datapoints or the amount of time that is tested to determine hyperglycemia).

The alarm system **104** may contain one or more individual alarms. Each of the alarms may be individually activated to indicate one or more conditions of the analyte. The alarms may be, for example, auditory or visual. Other sensory-stimulating alarm systems may be used including alarm systems which heat, cool, vibrate, or produce a mild electrical shock when activated. In some embodiments, the alarms are auditory with a different tone, note, or volume indicating different conditions. For example, a high note might indicate hyperglycemia and a low note might indicate hypoglycemia. Visual alarms may use a difference in color, brightness, or position on the on-skin sensor control device **44** to indicate different conditions. In some embodiments, an auditory alarm system is configured so that the volume of the alarm increases over time until the alarm is deactivated.

In some embodiments, the alarm may be automatically deactivated after a predetermined time period. In other embodiments, the alarm may be configured to deactivate when the data no longer indicate that the condition which triggered the alarm exists. In these embodiments, the alarm may be deactivated when a single data point indicates that the condition no longer exists or, alternatively, the alarm may be deactivated only after a predetermined number of datapoints or an average of datapoints obtained over a given period of time indicate that the condition no longer exists.

In some embodiments, the alarm may be deactivated manually by the patient or another person in addition to or as an alternative to automatic deactivation. In these embodiments, a switch **101** is provided which when activated turns off the alarm. The switch **101** may be operatively engaged (or disengaged depending on the configuration of the switch) by, for example, operating an actuator on the on-skin sensor control unit **44** or the receiver/display unit **46**, **48**. In some cases, an actuator may be provided on two or more units **44**, **46**, **48**, any of which may be actuated to deactivate the alarm. If the switch **101** and or actuator is provided on the receiver/display unit **46**, **48** then a signal may be transmitted from the receiver/display unit **46**, **48** to the receiver **98** on the on-skin sensor control unit **44** to deactivate the alarm.

A variety of switches **101** may be used including, for example, a mechanical switch, a reed switch, a Hall effect switch, a Gigantic Magnetic Ratio (GMR) switch (the resistance of the GMR switch is magnetic field dependent) and the like. Preferably, the actuator used to operatively engage (or disengage) the switch is placed on the on-skin sensor control unit **44** and configured so that no water can flow around the button and into the housing. One example of such a button is a flexible conducting strip that is completely covered by a flexible polymeric or plastic coating integral to the housing. In an open position the flexible conducting strip is bowed and bulges away from the housing. When depressed by the patient or another person, the flexible conducting strip is pushed directly toward a metal contact and completes the circuit to shut off the alarm.

For a reed or GMR switch, a piece of magnetic material, such as a permanent magnet or an electromagnet, in a flexible actuator that is bowed or bulges away from the housing **45** and the reed or GMR switch is used. The reed or

GMR switch is activated (to deactivate the alarm) by depressing the flexible actuator bringing the magnetic material closer to the switch and causing an increase in the magnetic field within the switch.

In some embodiments of the invention, the analyte monitoring device **40** includes only an on-skin control unit **44** and a sensor **42**. In these embodiments, the processing circuit **109** of the on-skin sensor control unit **44** is able to determine a level of the analyte and activate an alarm system **104** if the analyte level exceeds a threshold. The on-skin control unit **44**, in these embodiments, has an alarm system **104** and may also include a display, such as those discussed below with respect to the receiver/display units **46**, **48**. Preferably, the display is an LCD or LED display. The on-skin control unit **44** may not have a transmitter, unless, for example, it is desirable to transmit data, for example, to a control unit in a doctor's office.

The on-skin sensor control unit **44** may also include a reference voltage generator **101** to provide an absolute voltage or current for use in comparison to voltages or currents obtained from or used with the sensor **42**. An example of a suitable reference voltage generator is a band-gap reference voltage generator that uses, for example, a semiconductor material with a known band-gap. Preferably, the band-gap is temperature insensitive over the range of temperatures that the semiconductor material will experience during operation. Suitable semiconductor materials includes gallium, silicon and silicates.

A bias current generator **105** may be provided to correctly bias solid-state electronic components. An oscillator **107** may be provided to produce a clock signal that is typically used with digital circuitry.

The on-skin sensor control unit **44** may also include a watchdog circuit **103** that tests the circuitry, particularly, any digital circuitry in the control unit **44** to determine if the circuitry is operating correctly. Non-limiting examples of watchdog circuit operations include: a) generation of a random number by the watchdog circuit, storage of the number in a memory location, writing the number to a register in the watchdog circuit, and recall of the number to compare for equality; b) checking the output of an analog circuit to determine if the output exceeds a predetermined dynamic range; c) checking the output of a timing circuit for a signal at an expected pulse interval. Other examples of functions of a watchdog circuit are known in the art. If the watchdog circuit detects an error that watchdog circuit may activate an alarm and/or shut down the device.

Receiver/Display Unit

One or more receiver/display units **46**, **48** may be provided with the analyte monitoring device **40** for easy access to the data generated by the sensor **42** and may, in some embodiments, process the signals from the on-skin sensor control unit **44** to determine the concentration or level of analyte in the subcutaneous tissue. Small receiver/display units **46** may be carried by the patient. These units **46** may be palm-sized and/or may be adapted to fit on a belt or within a bag or purse that the patient carries. One embodiment of the small receiver/display unit **46** has the appearance of a pager, for example, so that the user is not identified as a person using a medical device. Such receiver/display units may optionally have one-way or two-way paging capabilities.

Large receiver/display units **48** may also be used. These larger units **48** may be designed to sit on a shelf or nightstand. The large receiver/display unit **48** may be used by parents to monitor their children while they sleep or to awaken patients during the night. In addition, the large receiver/display unit **48** may include a lamp, clock, or radio for convenience and/or for activation as an alarm. One or both types of receiver/display units **46**, **48** may be used.

The receiver/display units **46**, **48**, as illustrated in block form at FIG. **22**, typically include a receiver **150** to receive data from the on-skin sensor control unit **44**, an analyzer **152** to evaluate the data, a display **154** to provide information to the patient, and an alarm system **156** to warn the patient when a condition arises. The receiver/display units **46**, **48** may also optionally include a data storage device **158**, a transmitter **160**, and/or an input device **162**. The receiver/display units **46**,**48** may also include other components (not shown), such as a power supply (e.g., a battery and/or a power supply that can receive power from a wall outlet), a watchdog circuit, a bias current generator, and an oscillator. These additional components are similar to those described above for the on-skin sensor control unit **44**.

In one embodiment, a receiver/display unit **48** is a bedside unit for use by a patient at home. The bedside unit includes a receiver and one or more optional items, including, for example, a clock, a lamp, an auditory alarm, a telephone connection, and a radio. The bedside unit also has a display, preferably, with large numbers and/or letters that can be read across a room. The unit may be operable by plugging into an outlet and may optionally have a battery as backup. Typically, the bedside unit has a better antenna than a small palm-size unit, so the bedside unit's reception range is longer.

When an alarm is indicated, the bedside unit may activate, for example, the auditory alarm, the radio, the lamp, and/or initiate a telephone call. The alarm may be more intense than the alarm of a small palm-size unit to, for example, awaken or stimulate a patient who may be asleep, lethargic, or confused. Moreover, a loud alarm may alert a parent monitoring a diabetic child at night.

The bedside unit may have its own data analyzer and data storage. The data may be communicated from the on-skin sensor unit or another receiver/display unit, such as a palm-size or small receiver/display unit. Thus, at least one unit has all the relevant data so that the data can be downloaded and analyzed without significant gaps.

Optionally, the beside unit has an interface or cradle into which a small receiver/display unit may be placed. The bedside unit may be capable of utilizing the data storage and analysis capabilities of the small receiver/display unit and/or receive data from the small receiver/display unit in this position. The bedside unit may also be capable of recharging a battery of the small receiver/display unit.

The receiver **150** typically is formed using known receiver and antenna circuitry and is often tuned or tunable to the frequency or frequency band of the transmitter **98** in the on-skin sensor control unit **44**. Typically, the receiver **150** is capable of receiving signals from a distance greater than the transmitting distance of the transmitter **98**. The small receiver/display unit **46** can typically receive a signal from an on-skin sensor control unit **44** that is up to 2 meters, preferably up to 5 meters, and more preferably up to 10 meters or more, away. A large receiver/display unit **48**, such as a bedside unit, can typically receive a receive a signal from an on-skin sensor control unit **44** that is up to 5 meters distant, preferably up to 10 meters distant, and more preferably up to 20 meters distant or more.

In one embodiment, a repeater unit (not shown) is used to boost a signal from an on-skin sensor control unit **44** so that the signal can be received by a receiver/display unit **46**, **48** that may be distant from the on-skin sensor control unit **44**. The repeater unit is typically independent of the on-skin

sensor control unit **44**, but, in some cases, the repeater unit may be configured to attach to the on-skin sensor control unit **44**. Typically, the repeater unit includes a receiver for receiving the signals from the on-skin sensor control unit **44** and a transmitter for transmitting the received signals. Often the transmitter of the repeater unit is more powerful than the transmitter of the on-skin sensor control unit, although this is not necessary. The repeater unit may be used, for example, in a child's bedroom for transmitting a signal from an on-skin sensor control unit on the child to a receiver/display unit in the parent's bedroom for monitoring the child's analyte levels. Another exemplary use is in a hospital with a display/receiver unit at a nurse's station for monitoring on-skin sensor control unit(s) of patients.

The presence of other devices, including other on-skin sensor control units, may create noise or interference within the frequency band of the transmitter **98**. This may result in the generation of false data. To overcome this potential difficulty, the transmitter **98** may also transmit a code to indicate, for example, the beginning of a transmission and/or to identify, preferably using a unique identification code, the particular on-skin sensor control unit **44** in the event that there is more than one on-skin sensor control unit **44** or other transmission source within range of the receiver/display unit **46, 48**. The provision of an identification code with the data may reduce the likelihood that the receiver/display unit **46, 48** intercepts and interprets signals from other transmission sources, as well as preventing "crosstalk" with different on-skin sensor control units **44**. The identification code may be provided as a factory-set code stored in the sensor control unit **44**. Alternatively, the identification code may be randomly generated by an appropriate circuit in the sensor control unit **44** or the receiver/display unit **46, 48** (and transmitted to the sensor control unit **44**) or the identification code may be selected by the patient and communicated to the sensor control unit **44** via a transmitter or an input device coupled to the sensor control unit **44**.

Other methods may be used to eliminate "crosstalk" and to identify signals from the appropriate on-skin sensor control unit **44**. In some embodiments, the transmitter **98** may use encryption techniques to encrypt the datastream from the transmitter **98**. The receiver/display unit **46, 48** contains the key to decipher the encrypted data signal. The receiver/display unit **46, 48** then determines when false signals or "crosstalk" signals are received by evaluation of the signal after it has been deciphered. For example, the analyzer **152** in the one or more receiver/display units **46, 48** compares the data, such as current measurements or analyte levels, with expected measurements (e.g., an expected range of measurements corresponding to physiologically relevant analyte levels). Alternatively, an analyzer in the receiver/display units **46, 48** searches for an identification code in the decrypted data signal.

Another method to eliminate "crosstalk", which is typically used in conjunction with the identification code or encryption scheme, includes providing an optional mechanism in the on-skin sensor control unit **44** for changing transmission frequency or frequency bands upon determination that there is "crosstalk". This mechanism for changing the transmission frequency or frequency band may be initiated by the receiver/display unit automatically, upon detection of the possibility of cross-talk or interference, and/or by a patient manually. For automatic initiation, the receiver/display unit **46, 48** transmits a signal to the optional receiver **99** on the on-skin sensor control unit **44** to direct the transmitter **98** of the on-skin sensor control unit **44** to change frequency or frequency band.

Manual initiation of the change in frequency or frequency band may be accomplished using, for example, an actuator (not shown) on the receiver/display unit **46, 48** and/or on the on-skin sensor control unit **44** which a patient operates to direct the transmitter **98** to change frequency or frequency band. The operation of a manually initiated change in transmission frequency or frequency band may include prompting the patient to initiate the change in frequency or frequency band by an audio or visual signal from the receiver/display unit **46, 48** and/or on-skin sensor control unit **44**.

Returning to the receiver **150**, the data received by the receiver **150** is then sent to an analyzer **152**. The analyzer **152** may have a variety of functions, similar to the processor circuit **109** of the on-skin sensor control unit **44**, including 1) modifying the signals from the sensor **42** using calibration data and/or measurements from the temperature probe **66**, 2) determining a level of an analyte in the interstitial fluid, 3) determining a level of an analyte in the bloodstream based on the sensor measurements in the interstitial fluid, 4) determining if the level, rate of change, and/or acceleration in the rate of change of the analyte exceeds or meets one or more threshold values, 5) activating an alarm system **156** and/or **94** if a threshold value is met or exceeded, 6) evaluating trends in the level of an analyte based on a series of sensor signals, 7) determine a dose of a medication, and 7) reduce noise or error contributions (e.g., through signal averaging or comparing readings from multiple electrodes). The analyzer **152** may be simple and perform only one or a small number of these functions or the analyzer **152** may perform all or most of these functions.

The output from the analyzer **152** is typically provided to a display **154**. A variety of displays **154** may be used including cathode ray tube displays (particularly for larger units), LED displays, or LCD displays. The display **154** may be monochromatic (e.g., black and white) or polychromatic (i.e., having a range of colors). The display **154** may contain symbols or other indicators that are activated under certain conditions (e.g., a particular symbol may become visible on the display when a condition, such as hyperglycemia, is indicated by signals from the sensor **42**). The display **154** may also contain more complex structures, such as LCD or LED alphanumeric structures, portions of which can be activated to produce a letter, number, or symbol. For example, the display **154** may include region **164** to display numerically the level of the analyte, as illustrated in FIG. **23**. In one embodiment, the display **154** also provides a message to the patient to direct the patient in an action. Such messages may include, for example, "Eat Sugar", if the patient is hypoglycemic, or "Take Insulin", if the patient is hyperglycemic.

One example of a receiver/display unit **46, 48** is illustrated in FIG. **23**. The display **154** of this particular receiver/display unit **46, 48** includes a portion **164** which displays the level of the analyte, for example, the blood glucose concentration, as determined by the processing circuit **109** and/or the analyzer **152** using signals from the sensor **42**. The display also includes various indicators **166** which may be activated under certain conditions. For example, the indicator **168** of a glucose monitoring device may be activated if the patient is hyperglycemic. Other indicators may be activated in the cases of hypoglycemia **(170)**, impending hyperglycemia **(172)**, impending hypoglycemia **(174)**, a malfunction, an error condition, or when a calibration sample is needed **(176)**. In some embodiments, color coded indicators may be used. Alternatively, the portion **164** which displays the blood glucose concentration may also include a

composite indicator **180** (see FIG. **24**), portions of which may be appropriately activated to indicate any of the conditions described above.

The display **154** may also be capable of displaying a graph **178** of the analyte level over a period of time, as illustrated in FIG. **24**. Examples of other graphs that may be useful include graphs of the rate of change or acceleration in the rate of change of the analyte level over time. In some embodiments, the receiver/display unit is configured so that the patient may choose the particular display (e.g., blood glucose concentration or graph of concentration versus time) that the patient wishes to view. The patient may choose the desired display mode by pushing a button or the like, for example, on an optional input device **162**.

The receiver/display units **46, 48** also typically include an alarm system **156**. The options for configuration of the alarm system **156** are similar to those for the alarm system **104** of the on-skin sensor control unit **44**. For example, if glucose is the analyte, than the on-skin sensor control unit **44** may include an alarm system **156** that warns the patient of conditions such as hypoglycemia, hyperglycemia, impending hypoglycemia, and/or impending hyperglycemia. The alarm system **156** is triggered when the data from the analyzer **152** reaches or exceeds a threshold value. The threshold values may correspond to interstitial fluid glucose concentrations or sensor signals (e.g., current or converted voltage values) which correlate to the above-mentioned blood glucose levels.

The alarm system **156** may also, or alternatively, be activated when the rate or acceleration of an increase or decrease in analyte level reaches or exceeds a threshold value. For example, in the case of a subcutaneous glucose monitor, the alarm system **156** might be activated if the rate of change in glucose concentration exceeds a threshold value which might indicate that a hyperglycemic or hypoglycemic condition is likely to occur.

The alarm system **156** may be configured to activate when a single data point meets or exceeds a particular threshold value. Alternatively, the alarm may be activated only when a predetermined number of datapoints spanning a predetermined amount of time meet or exceed the threshold value. As another alternative, the alarm may be activated only when the datapoints spanning a predetermined amount of time have an average value which meets or exceeds the threshold value. Each condition that can trigger an alarm may have a different alarm activation condition. In addition, the alarm activation condition may change depending on current conditions (e.g., an indication of impending hyperglycemia may alter the number of datapoints or the amount of time that is tested to determine hyperglycemia).

The alarm system **156** may contain one or more individual alarms. Each of the alarms may be individually activated to indicate one or more conditions of the analyte. The alarms may be, for example, auditory or visual. Other sensory-stimulating alarm systems by be used including alarm systems **156** that direct the on-skin sensor control unit **44** to heat, cool, vibrate, or produce a mild electrical shock. In some embodiments, the alarms are auditory with a different tone, note, or volume indicating different conditions. For example, a high note might indicate hyperglycemia and a low note might indicate hypoglycemia. Visual alarms may also use a difference in color or brightness to indicate different conditions. In some embodiments, an auditory alarm system might be configured so that the volume of the alarm increases over time until the alarm is deactivated.

In some embodiments, the alarms may be automatically deactivated after a predetermined time period. In other embodiments, the alarms may be configured to deactivate when the data no longer indicate that the condition which triggered the alarm exists. In these embodiments, the alarms may be deactivated when a single data point indicates that the condition no longer exists or, alternatively, the alarm may be deactivated only after a predetermined number of datapoints or an average of datapoints obtained over a given period of time indicate that the condition no longer exists.

In yet other embodiments, the alarm may be deactivated manually by the patient or another person in addition to or as an alternative to automatic deactivation. In these embodiments, a switch is provided which when activated turns off the alarm. The switch may be operatively engaged (or disengaged depending on the configuration of the switch) by, for example, pushing a button on the receiver/display unit **46, 48**. One configuration of the alarm system **156** has automatic deactivation after a period of time for alarms that indicate an impending condition (e.g., impending hypoglycemia or hyperglycemia) and manual deactivation of alarms which indicate a current condition (e.g., hypoglycemia or hyperglycemia).

The receiver/display units **46, 48** may also include a number of optional items. One item is a data storage unit **158**. The data storage unit **158** may be desirable to store data for use if the analyzer **152** is configured to determine trends in the analyte level. The data storage unit **158** may also be useful to store data that may be downloaded to another receiver/display unit, such as a large display unit **48**. Alternatively, the data may be downloaded to a computer or other data storage device in a patient's home, at a doctor's office, etc. for evaluation of trends in analyte levels. A port (not shown) may be provided on the receiver/display unit **46, 48** through which the stored data may be transferred or the data may be transferred using an optional transmitter **160**. The data storage unit **158** may also be activated to store data when a directed by the patient via, for example, the optional input device **162**. The data storage unit **158** may also be configured to store data upon occurrence of a particular event, such as a hyperglycemic or hypoglycemic episode, exercise, eating, etc. The storage unit **158** may also store event markers with the data of the particular event. These event markers may be generated either automatically by the display/receiver unit **46, 48** or through input by the patient.

The receiver/display unit **46, 48** may also include an optional transmitter **160** which can be used to transmit 1) calibration information, 2) a signal to direct the transmitter **98** of the on-skin sensor control unit **44** to change transmission frequency or frequency bands, and/or 3) a signal to activate an alarm system **104** on the on-skin sensor control unit **44**, all of which are described above. The transmitter **160** typically operates in a different frequency band than the transmitter **98** of the on-skin sensor control unit **44** to avoid cross-talk between the transmitters **98, 160**. Methods may be used to reduce cross-talk and the reception of false signals, as described above in connection with the transmitter **100** of the on-skin sensor control unit **44**. In some embodiments, the transmitter **160** is only used to transmit signals to the sensor control unit **44** and has a range of less than one foot, and preferably less than six inches. This then requires the patient or another person to hold the receiver/display unit **46** near the sensor control unit **44** during transmission of data, for example, during the transmission of calibration information. Transmissions may also be performed using methods other than rf transmission, including optical or wire transmission.

In addition, in some embodiments of the invention, the transmitter **160** may be configured to transmit data to

another receiver/display unit **46**, **48** or some other receiver. For example, a small receiver/display unit **46** may transmit data to a large receiver/display unit **48**, as illustrated in FIG. **1**. As another example, a receiver/display unit **46**, **48** may transmit data to a computer in the patient's home or at a doctor's office. Moreover, the transmitter **160** or a separate transmitter may direct a transmission to another unit or to a telephone or other communications device that alerts a doctor or other individual when an alarm is activated and/or if, after a predetermined time period, an activated alarm has not been deactivated, suggesting that the patient may require assistance. In some embodiments, the receiver/display unit is capable of one-way or two-way paging and/or is coupled to a telephone line to send and/or receive messages from another, such as a health professional monitoring the patient.

Another optional component for the receiver/display unit **46**, **48** is an input device **162**, such as a keypad or keyboard. The input device **162** may allow numeric or alphanumeric input. The input device **162** may also include buttons, keys, or the like which initiate functions of and/or provide input to the analyte monitoring device **40**. Such functions may include initiating a data transfer, manually changing the transmission frequency or frequency band of the transmitter **98**, deactivating an alarm system **104**, **156**, inputting calibration data, and/or indicating events to activate storage of data representative of the event.

Another embodiment of the input device **162** is a touch screen display. The touch screen display may be incorporated into the display **154** or may be a separate display. The touch screen display is activated when the patient touches the screen at a position indicated by a "soft button" which corresponds to a desired function. Touch screen displays are well known.

In addition, the analyte monitoring device **40** may include password protection to prevent the unauthorized transmission of data to a terminal or the unauthorized changing of settings for the device **40**. A patient may be prompted by the display **154** to input the password using the input device **152** whenever a password-protected function is initiated.

Another function that may be activated by the input device **162** is a deactivation mode. The deactivation mode may indicate that the receiver/display unit **46**, **48** should no longer display a portion or all of the data. In some embodiments, activation of the deactivation mode may even deactivate the alarm systems **104**, **156**. Preferably, the patient is prompted to confirm this particular action. During the deactivation mode, the processing circuit **109** and/or analyzer **152** may stop processing data or they may continue to process data and not report it for display and may optionally store the data for later retrieval.

Alternatively, a sleep mode may be entered if the input device **162** has not been activated for a predetermined period of time. This period of time may be adjustable by the patient or another individual. In this sleep mode, the processing circuit **109** and/or analyzer **152** typically continue to obtain measurements and process data, however, the display is not activated. The sleep mode may be deactivated by actions, such as activating the input device **162**. The current analyte reading or other desired information may then be displayed.

In one embodiment, a receiver/display unit **46** initiates an audible or visual alarm when the unit **46** has not received a transmission from the on-skin sensor control unit within a predetermined amount of time. The alarm typically continues until the patient responds and/or a transmission is received. This can, for example, remind a patient if the receiver/display unit **46** is inadvertently left behind.

In another embodiment, the receiver/display unit **46**, **48** is integrated with a calibration unit (not shown). For example, the receiver/display unit **46**, **48** may, for example, include a conventional blood glucose monitor. Another useful calibration device utilizing electrochemical detection of analyte concentration is described in U.S. patent application Ser. No. 08/795,767, incorporated herein by reference. Other devices may be used including those that operate using, for example, electrochemical and colorimetric blood glucose assays, assays of interstitial or dermal fluid, and/or non-invasive optical assays. When a calibration of the implanted sensor is needed, the patient uses the integrated in vitro monitor to generate a reading. The reading may then, for example, automatically be sent by the transmitter **160** of the receiver/display unit **46**, **48** to calibrate the sensor **42**.

Integration With a Drug Administration System

FIG. **25** illustrates a block diagram of a sensor-based drug delivery system **250** according to the present invention. The system may provide a drug to counteract the high or low level of the analyte in response to the signals from one or more sensors **252**. Alternatively, the system monitors the drug concentration to ensure that the drug remains within a desired therapeutic range. The drug delivery system includes one or more (and preferably two or more) subcutaneously implanted sensors **252**, an on-skin sensor control unit **254**, a receiver/display unit **256**, a data storage and controller module **258**, and a drug administration system **260**. In some cases, the receiver/display unit **256**, data storage and controller module **258**, and drug administration system **260** may be integrated in a single unit. The sensor-based drug delivery system **250** uses data form the one or more sensors **252** to provide necessary input for a control algorithm/mechanism in the data storage and controller module **252** to adjust the administration of drugs. As an example, a glucose sensor could be used to control and adjust the administration of insulin.

In FIG. **25**, sensor **252** produces signals correlated to the level of the drug or analyte in the patient. The level of the analyte will depend on the amount of drug delivered by the drug administration system. A processor **262** in the on-skin sensor control unit **254**, as illustrated in FIG. **25**, or in the receiver/display unit **256** determines the level of the analyte, and possibly other information, such as the rate or acceleration of the rate in the increase or decrease in analyte level. This information is then transmitted to the data storage and controller module **252** using a transmitter **264** in the on-skin sensor control unit **254**, as illustrated in FIG. **25**, or a non-integrated receiver/display unit **256**.

If the drug delivery system **250** has two or more sensors **252**, the data storage and controller module **258** may verify that the data from the two or more sensors **252** agrees within predetermined parameters before accepting the data as valid. This data may then be processed by the data storage and controller module **258**, optionally with previously obtained data, to determine a drug administration protocol. The drug administration protocol is then executed using the drug administration system **260**, which may be an internal or external infusion pump, syringe injector, transdermal delivery system (e.g., a patch containing the drug placed on the skin), or inhalation system. Alternatively, the drug storage and controller module **258** may provide a the drug administration protocol so that the patient or another person may provide the drug to the patient according to the profile.

In one embodiment of the invention, the data storage and controller module **258** is trainable. For example, the data storage and controller module **258** may store glucose readings over a predetermined period of time, e.g., several weeks. When an episode of hypoglycemia or hyperglycemia is encountered, the relevant history leading to such event

may be analyzed to determine any patterns which might improve the system's ability to predict future episodes. Subsequent data might be compared to the known patterns to predict hypoglycemia or hyperglycemia and deliver the drug accordingly. In another embodiment, the analysis of trends is performed by an external system or by the processing circuit **109** in the on-skin sensor control unit **254** or the analyzer **152** in the receiver/display unit **256** and the trends are incorporated in the data storage and controller **258**.

In one embodiment, the data storage and controller module **258**, processing circuit **109**, and/or analyzer **152** utilizes patient-specific data from multiple episodes to predict a patient's response to future episodes. The multiple episodes used in the prediction are typically responses to a same or similar external or internal stimulus. Examples of stimuli include periods of hypoglycemia or hyperglycemia (or corresponding conditions for analytes other than glucose), treatment of a condition, drug delivery (e.g., insulin for glucose), food intake, exercise, fasting, change in body temperature, elevated or lowered body temperature (e.g., fever), and diseases, viruses, infections, and the like. By analyzing multiple episodes, the data storage and controller module **258**, processing circuit **109**, and/or analyzer **152** can predict the coarse of a future episode and provide, for example, a drug administration protocol or administer a drug based on this analysis. An input device (not shown) may be used by the patient or another person to indicate when a particular episode is occurring so that, for example, the data storage and controller module **258**, processing circuit **109**, and/or analyzer **152** can tag the data as resulting from a particular episode, for use in further analyses.

In addition, the drug delivery system **250** may be capable of providing on-going drug sensitivity feedback. For example, the data from the sensor **252** obtained during the administration of the drug by the drug administration system **260** may provide data about the individual patient's response to the drug which can then be used to modify the current drug administration protocol accordingly, both immediately and in the future. An example of desirable data that can be extracted for each patient includes the patient's characteristic time constant for response to drug administration (e.g., how rapidly the glucose concentration falls when a known bolus of insulin is administered). Another example is the patient's response to administration of various amounts of a drug (e.g., a patient's drug sensitivity curve). The same information may be stored by the drug storage and controller module and then used to determine trends in the patient's drug response, which may be used in developing subsequent drug administration protocols, thereby personalizing the drug administration process for the needs of the patient.

The present invention should not be considered limited to the particular examples described above, but rather should be understood to cover all aspects of the invention as fairly set out in the attached claims. Various modifications, equivalent processes, as well as numerous structures to which the present invention may be applicable will be readily apparent to those of skill in the art to which the present invention is directed upon review of the instant specification. The claims are intended to cover such modifications and devices.

We claim:

1. A sensor control unit comprising:

a housing adapted for placement on skin and adapted to receive a portion of an electrochemical sensor extending out of the skin having a plurality of contact pads;

a plurality of conductive contacts disposed on the housing and configured for coupling to the plurality of contact pads on the electrochemical sensor; and

an rf transmitter disposed in the housing and coupled to the plurality of conductive contacts for transmitting data obtained using the electrochemical sensor.

2. The sensor control unit of claim **1**, further comprising adhesive for adhering the sensor control unit to skin.

3. The sensor control unit of claim **1**, further comprising a mounting unit adapted for coupling with the housing.

4. The sensor control unit of claim **3**, wherein the mounting unit is configured for placement between the housing and the skin of the patient.

5. The sensor control unit of claim **3**, wherein adhesive is disposed on a surface of the mounting unit for adhering the mounting unit and housing to the skin of the patient.

6. The sensor control unit of claim **3**, further comprising a support structure disposed on the mounting unit for aligning the contact pads of the sensor with the conductive contacts of the sensor control unit.

7. The sensor control unit of claim **3**, further comprising an opening in the mounting unit configured for guiding insertion of the electrochemical sensor into the patient.

8. The sensor control unit of claim **1**, wherein the housing comprises a base and a cover.

9. The sensor control unit of claim **8**, wherein the base and cover are configured to form a water resistant seal when coupled.

10. The sensor control unit of claim **1**, wherein the housing is water resistant.

11. The sensor control unit of claim **1**, wherein the conductive contacts are disposed on an interior surface of the housing.

12. The sensor control unit of claim **11**, wherein the housing comprises a port adapted for penetration by the sensor.

13. The sensor control unit of claim **1**, wherein the plurality of conductive contacts are disposed on an exterior surface of the housing.

14. The sensor control unit of claim **1**, wherein a volume of the housing is about 10 cm^3 or less.

15. The sensor control unit of claim **1**, wherein a height of the housing is about 0.7 cm or less.

16. The sensor control unit of claim **1**, wherein a weight of the housing is about 90 grams or less.

17. The sensor control unit of claim **1**, further comprising a battery disposed in the housing.

18. The sensor control unit of claim **17**, wherein the battery is sealed within the housing of the sensor control unit.

19. The sensor control unit of claim **17**, wherein the battery is removable from the housing.

20. The sensor control unit of claim **1**, further comprising an alarm to indicate at least one of hypoglycemia, impending hypoglycemia, hyperglycemia, or impending hyperglycemia.

21. The sensor control unit of claim **20**, further comprising a switch for deactivating the alarm.

22. The sensor control unit of claim **20**, wherein the alarm produces an audible signal when activated.

23. The sensor control unit of claim **22**, wherein a loudness of the alarm increases over time when the alarm is activated.

24. The sensor control unit of claim **20**, wherein the alarm produces a vibration when activated.

25. The sensor control unit of claim **20**, wherein the alarm is configured to indicate at least two of hypoglycemia, impending hypoglycemia, hyperglycemia, or impending hyperglycemia.

26. The sensor control unit of claim **1**, further comprising a receiver disposed in the housing.

27. The sensor control unit of claim 1, further comprising a processing circuit disposed in the housing and coupled to the conductive contacts, the processing circuit is configured for determining a level of an analyte from a signal generated by the sensor.

28. The sensor control unit of claim 27, wherein the processing circuit is configured for determining the level of the analyte in blood from a sensor that is subcutaneously implanted in the patient.

29. The sensor control unit of claim 27, wherein the processing circuit is configured for adjusting the data for temperature using a signal from a temperature probe of the sensor.

30. The sensor control unit of claim 1, wherein the plurality of conductive contacts of the sensor control unit comprise conductive carbon.

31. The sensor control unit of claim 1, further comprising a data storage unit disposed in the housing for keeping data for a period of time.

32. A sensor assembly, comprising:

a sensor having a substrate, at least one recessed channel formed in a surface of the substrate, conductive material disposed in the at least one recessed channel to form at least one working electrode and an individual contact pad for each of the at least one working electrodes; and

a sensor control unit for placement on a skin of an animal, the sensor control unit including

a housing having a port through which the sensor penetrates the housing, and

a plurality of conductive contacts disposed in the housing and configured for coupling with the contact pads of the sensor.

33. A sensor assembly, comprising:

a sensor comprising a flexible substrate with at least one working electrode, at least one counter electrode, and at least one contact pad coupled to each of the working and counter electrodes, the sensor being adapted for implantation of a portion of the sensor comprising the working and counter electrodes through skin; and

a sensor control unit comprising

a housing adapted for placement on skin;

a plurality of conductive contacts disposed on the housing and configured for coupling to the contact pads of the sensor; and

an rf transmitter disposed in the housing and coupled to the plurality of conductive contacts for transmitting data obtained using the sensor.

34. A sensor assembly, comprising:

a sensor comprising at least one working electrode and at least one contact pad coupled to the at least one working electrode; and

the sensor control unit of claim 1.

35. The sensor assembly of claim 34, wherein the plurality of conductive contacts, the plurality of contact pads, or both comprise conductive carbon.

36. The sensor assembly of claim 35, wherein a signal generated by corrosion of the plurality of conductive contacts and the plurality of contact pads when immersed in a 1 mM NaCl solution is 3% or less of a signal generated by the working electrode when exposed to an analyte having a concentration within an expected physiological range.

37. The sensor assembly of claim 35, wherein a signal generated by corrosion of the plurality of conductive contacts and the plurality of contact pads when immersed in a 100 mM NaCl solution is 3% or less of a signal generated by the working electrode when exposed to an analyte having a concentration within an expected physiological range.

38. The sensor assembly of claim 34, further comprising a mounting unit adapted for coupling with the housing.

39. An analyte monitoring system comprising:

a sensor comprising at least one working electrode and at least one contact pad coupled to the at least one working electrode, the sensor being adapted for implantation of a portion of the sensor comprising the working electrode through skin;

the sensor control unit of claim 1; and

a display unit comprising an rf receiver for receiving data from the sensor control unit, and a display coupled to the rf receiver for displaying an indication of the level of an analyte.

40. The analyte monitoring system of claim 39, further comprising a mounting unit adapted for coupling with the housing.

41. The analyte monitoring system of claim 39, wherein the sensor control unit further comprises an rf receiver disposed in the housing and the display unit further comprises an rf transmitter for transmitting to the rf receiver of the sensor control unit.

42. The analyte monitoring system of claim 39, wherein the display unit further comprises an analyzer coupled to the display and the rf receiver for analyzing data from the rf receiver and providing analyzed data to the display.

43. The analyte monitoring system of claim 39, wherein the display unit further comprises a battery coupled to the receiver and display.

44. The analyte monitoring system of claim 39, wherein the display unit further comprises an input device coupled to the display.

45. The analyte monitoring system of claim 39, further comprising a calibrator for providing a calibration value to at least one of the display unit and the sensor control unit.

46. The analyte monitoring system of claim 45, wherein the calibrator is coupled to the receiver of the display unit for providing the calibration value to the sensor control unit.

47. The analyte monitoring system of claim 45, wherein the calibrator provides a calibration value using 1 microliter or less of body fluid.

48. The analyte monitoring system of claim 45, wherein the calibrator comprises a device configured for non-invasive optical assay of analyte.

49. The analyte monitoring system of claim 39, wherein the display unit is portable.

50. The analyte monitoring system of claim 49, wherein the display unit is configured for wearing on a piece of clothing.

51. The analyte monitoring system of claim 49, further comprising a secondary display unit having a power cord for connecting to an electrical outlet, a receiver for receiving data transmitted by the transmitter, and a display coupled to the receiver for displaying the level of the analyte.

52. The analyte monitoring system of claim 51, wherein the display unit and the secondary display unit are configured for exchanging data.

53. The analyte monitoring system of claim 39, wherein the display unit is configured for connection to an electrical outlet.

54. The analyte monitoring system of claim 53, wherein the display unit further comprises at least one of a lamp, a radio, a clock, an interface to a telephone system, an interface to a computer, or a battery backup system.

55. The analyte monitoring system of claim 39, wherein the display unit further comprises an alarm configured for

activation if a signal from the transmitter of the sensor control unit is not received with a predetermined time interval.

56. The analyte monitoring system of claim **39**, wherein the display unit comprises a pager receiver for receiving pages from an external paging system.

57. The analyte monitoring system of claim **56**, wherein the display unit comprises a pager transmitter for sending pages to the external paging system, wherein the pager transmitter is activated when at least one of hypoglycemia, impending hypoglycemia, hyperglycemia, or impending hyperglycemia is indicated.

58. The analyte monitoring system of claim **39**, wherein the display unit is configured for coupling to an external download device to transfer data from the display unit.

59. The analyte monitoring system of claim **39**, further comprising at least one alarm disposed in the display unit and configured to indicate when a level of an analyte exceeds a threshold level.

60. The analyte monitoring system of claim **59**, wherein the alarm is configured to indicate when a level of an analyte is near a threshold level.

61. The analyte monitoring system of claim **60**, wherein the alarm is configured to indicate at least one of hypoglycemia, impending hypoglycemia, hyperglycemia, or impending hyperglycemia.

62. The analyte monitoring system of claim **61**, wherein the alarm is configured to indicate impending hypoglycemia and is deactivated if an impending hypoglycemia condition does not exist.

63. The analyte monitoring system of claim **61**, wherein the alarm is configured to indicate hypoglycemia and is only manually deactivatable.

64. The analyte monitoring system of claim **61**, wherein the alarm is configured to indicate hypoglycemia and the alarm, when activated, produces an audible signal that increases in loudness over time.

65. The analyte monitoring system of claim **59**, wherein the analyte monitoring system comprises at least two alarms, each alarm producing an audible signal, wherein the signals of the at least two alarms are distinguishable.

66. The analyte monitoring system of claim **39**, further comprising a processing circuit in the display unit, the processing circuit being configured to analyze patient-specific data from multiple episodes to predict a patient's response to future episodes.

67. The analyte monitoring system of claim **66**, wherein the patient-specific data comprises a response to a treatment.

68. The analyte monitoring system of claim **67**, wherein the analyte is glucose and the treatment is an administration of insulin.

69. The analyte monitoring system of claim **67**, wherein the display unit further comprises an input device for indicating when a treatment is administered.

70. The analyte monitoring system of claim **66**, wherein the processing circuit is configured to determine a drug administration protocol in response to the patient-specific data.

71. The analyte monitoring system of claim **66**, wherein the patient-specific data is a dosage dependence of a response to a drug.

72. The analyte monitoring system of claim **66**, wherein the display unit further comprises an input device for indicating when food has been injested.

73. The analyte monitoring system of claim **72**, where the input device is configured for indicating an approximate caloric content of the food.

74. The analyte monitoring system of claim **39**, further comprising a temperature measurement device to correct data obtained from the sensor.

75. The analyte monitoring system of claim **74**, wherein the temperature measurement device comprises a temperature probe disposed on the substrate.

76. The analyte monitoring system of claim **39**, wherein the analyte monitoring system further comprises a drug administration system which dispenses a drug based on the level of the analyte.

77. The analyte monitoring system of claim **76**, wherein the drug administration system comprises a receiver for receiving data from at least one of the sensor control unit or display unit to direct dispensing of the drug.

78. The analyte monitoring system of claim **76**, wherein the drug administration system comprises at least one of a needle, syringe, pump, catheter, inhaler, or transdermal patch to administer the drug.

79. The analyte monitoring system of claim **76**, wherein the drug is insulin.

80. A method for monitoring a level of an analyte using the analyte monitoring system of claim **39**, the method comprising:

inserting the sensor into skin of a patient;

attaching the sensor control unit to the skin of the patient;

coupling a plurality of conductive contacts disposed in the sensor control unit to a plurality of contact pads disposed on the sensor;

collecting data, using the sensor control unit, regarding a level of an analyte from signals generated by the sensor;

transmitting the collected data to the display unit using the rf transmitter of the sensor control unit; and

displaying an indication of the level of the analyte on the display of the display unit.

81. The method of claim **80**, wherein collecting data comprises generating signals from the sensor and processing the signals into data.

82. The method of claim **80**, wherein the data comprises the signals from the sensor.

83. The method of claim **80**, further comprising activating an alarm if the data indicates an alarm condition.

84. The method of claim **80**, further comprising administering a drug in response to the data.

85. The method of claim **80**, further comprising obtaining a calibration value from a calibration device to calibrate the data.

86. The method of claim **85**, wherein the calibration device is coupled to the display unit.

87. The method of claim **86**, further comprising transmitting the calibration value from a transmitter in the display unit to a receiver in the sensor control unit.

88. An analyte monitoring system comprising:

(a) a sensor comprising at least one working electrode and at least one contact pad coupled to the at least one working electrode, the sensor being adapted for implantation of a portion of the sensor comprising the working electrode through skin;

(b) a sensor control unit comprising,

(i) a housing adapted for placement on skin and adapted to receive a portion of an electrochemical sensor having a plurality of contact pads;

(ii) a plurality of conductive contacts disposed on the housing and configured for coupling to the plurality of contact pads on the electrochemical sensor; and

(iii) an rf transmitter disposed in the housing and coupled to the plurality of conductive contacts for transmitting data obtained using the electrochemical sensor; and

(c) a display unit comprising a receiver for receiving data from the sensor control unit, and a display coupled to the receiver for displaying an indication of the level of an analyte, wherein the transmitter of the sensor control unit and the receiver of the display unit are capable of transmitting and receiving data when separated by a distance of two meters.

89. A sensor control unit comprising:

a housing adapted for placement on skin and adapted to receive a portion of an independent electrochemical sensor extending out of the skin and having at least one contact pad;

at least one conductive contact configured for coupling to the at least one contact pad on the independent electrochemical sensor; and

an rf transmitter disposed in the housing and coupled to the at least one conductive contact for transmitting data obtained using the independent electrochemical sensor.

90. A method for monitoring a level of an analyte using the analyte monitoring system of claim **39**, the method comprising:

inserting the sensor into skin of a patient;

attaching the sensor control unit to the skin of the patient;

coupling a plurality of conductive contacts disposed in the sensor control unit to a plurality of contact pads disposed on the sensor;

collecting data, using the sensor control unit, regarding a level of an analyte from signals generated by the sensor;

transmitting the collected data to the display unit using the rf transmitter of the sensor control unit;

displaying an indication of the level of the analyte on the display of the display unit; and

replacing the sensor with a new sensor after a period of use.

91. The analyte monitoring system of claim **74**, wherein the analyte monitoring system if configured and arranged to determine a temperature near the sensor using two electrodes of the sensor.

92. The analyte monitoring system of claim **39**, wherein the sensor further comprises an enzyme non-leachably disposed on the at least one working electrode.

93. The analyte monitoring system of claim **39**, wherein the working electrode comprises a mixture of conductive material and an analyte-responsive enzyme.

94. The analyte monitoring system of claim **39**, wherein the sensor further comprises a mass transport limiting membrane disposed over the working electrode, the mass transport limiting member maintaining a rate of permeation of the analyte through the mass transport limiting membrane with a variation of no more than 3% per ° C. at temperatures ranging from 30° C. to 40° C.

* * * * *

UNITED STATES PATENT AND TRADEMARK OFFICE

CERTIFICATE OF CORRECTION

PATENT NO. : 6,175,752 B1
DATED : January 16, 2001
INVENTOR(S) : Say et al.

It is certified that error appears in the above-identified patent and that said Letters Patent is hereby corrected as shown below:

Title page,
Item [75] (Inventors:), delete "Behrad Aria, Alameda, CA (US)" and "Fredric C. Colman, Berkeley, CA (US)".

Signed and Sealed this

Twenty-fifth Day of September, 2001

Attest:

Nicholas P. Godici

NICHOLAS P. GODICI
Acting Director of the United States Patent and Trademark Office

Attesting Officer

UNITED STATES PATENT AND TRADEMARK OFFICE

CERTIFICATE OF CORRECTION

PATENT NO. : 6,175,752 C1
APPLICATION NO. : 90/009497
DATED : December 14, 2010
INVENTOR(S) : James Say et al.

It is certified that error appears in the above-identified patent and that said Letters Patent is hereby corrected as shown below:

AT COL 2, LINE 1:

Please replace -- The patentability of claims 35, 36, 52, 55, 56, 57 and 87 is confirmed. -- with -- The patentability of claims 36, 37, 52, 55, 56, 57 and 87 is confirmed. --

AT COL 2, LINE 4:

Please replace -- Claims 1-34, 37-51, 53-54, 58-86 and 88-94 were not reexamined. -- with -- Claims 1-35, 38-51, 53, 54, 58-86, and 88-94 were not reexamined. --

Signed and Sealed this
Twenty-sixth Day of July, 2011

David J. Kappos

David J. Kappos
Director of the United States Patent and Trademark Office

US006175752C1

(12) **EX PARTE REEXAMINATION CERTIFICATE** (7929th)

United States Patent

Say et al.

(10) **Number: US 6,175,752 C1**

(45) **Certificate Issued: Dec. 14, 2010**

(54) **ANALYTE MONITORING DEVICE AND METHODS OF USE**

(75) Inventors: **James Say**, Alameda, CA (US); **Michael F. Tomasco**, Cupertino, CA (US); **Adam Heller**, Austin, TX (US); **Yoram Gal**, Kibbutz Yagur, IL (US); **Behrad Aria**, Alameda, CA (US); **Ephriam Heller**, Oakland, CA (US); **Phillip John Plante**, Sunnyvale, CA (US); **Mark S. Vreeke**, Alameda, CA (US); **Keith A Friedman**, Austin, TX (US); **Fredric C. Colman**, Berkeley, CA (US)

(73) Assignee: **Therasense, Inc.**, Alameda, CA (US)

Reexamination Request:
No. 90/009,497, Jun. 17, 2009

Reexamination Certificate for:

Patent No.:	**6,175,752**
Issued:	**Jan. 16, 2001**
Appl. No.:	**09/070,677**
Filed:	**Apr. 30, 1998**

Certificate of Correction issued Sep. 25, 2001.

(51) **Int. Cl.**
A61B 5/00 (2006.01)

(52) **U.S. Cl.** **600/345**; 600/365; 128/903

(58) **Field of Classification Search** ..... None
See application file for complete search history.

(56) **References Cited**

U.S. PATENT DOCUMENTS

2,402,306	A	6/1946	Turkel
3,132,123	A	5/1964	Harris, Jr. et al.
3,219,533	A	11/1965	Mullins
3,260,656	A	7/1966	Ross, Jr.
3,282,875	A	11/1966	Connolly et al.
3,304,413	A	2/1967	Lehman et al.
3,310,606	A	3/1967	Fritz
3,397,191	A	8/1968	Beckerbauer
3,635,926	A	1/1972	Gresham et al.
3,651,318	A	3/1972	Czekajewski
3,653,841	A	4/1972	Klein
3,698,386	A	10/1972	Fried
3,719,564	A	3/1973	Lilly et al.
3,768,014	A	10/1973	Smith et al.
3,775,182	A	11/1973	Patton et al.
3,776,832	A	12/1973	Oswin et al.
3,785,939	A	1/1974	Hsu
3,837,339	A	9/1974	Aisenberg et al.
3,851,018	A	11/1974	Kelly
3,898,984	A	8/1975	Mandel et al.
3,919,051	A	11/1975	Koch et al.
3,926,760	A	12/1975	Allen et al.
3,929,971	A	12/1975	Roy
3,930,889	A	1/1976	Ruggiero et al.
3,933,593	A	1/1976	Sternberg
3,943,918	A	3/1976	Lewis
3,964,974	A	6/1976	Banauch et al.
3,966,580	A	6/1976	Janata et al.
3,972,320	A	8/1976	Kalman
3,979,274	A	9/1976	Newman
4,008,717	A	2/1977	Kowarski
4,016,866	A	4/1977	Lawton
4,024,312	A	5/1977	Korpman
4,032,729	A	6/1977	Koistinen
4,036,749	A	7/1977	Anderson
4,040,908	A	8/1977	Clark, Jr.
4,055,175	A	10/1977	Clemens et al.
4,059,406	A	11/1977	Fleet
4,059,708	A	11/1977	Heiss, Jr. et al.
4,068,536	A	1/1978	Stackhouse
4,073,713	A	2/1978	Newman
4,076,596	A	2/1978	Connery et al.
4,076,656	A	2/1978	White et al.
4,098,574	A	7/1978	Dappen
4,100,048	A	7/1978	Pompei et al.
4,101,814	A	7/1978	Haferl
4,129,128	A	12/1978	McFarlane
4,151,845	A	5/1979	Clemens
4,154,231	A	5/1979	Russell
4,168,205	A	9/1979	Danninger et al.
4,172,770	A	10/1979	Semersky et al.
4,178,916	A	12/1979	McNamara
4,193,982	A	3/1980	Avrameas et al.
4,197,840	A	4/1980	Beck et al.
4,206,755	A	6/1980	Klein
4,215,703	A	8/1980	Willson
4,224,125	A	9/1980	Nakamura et al.

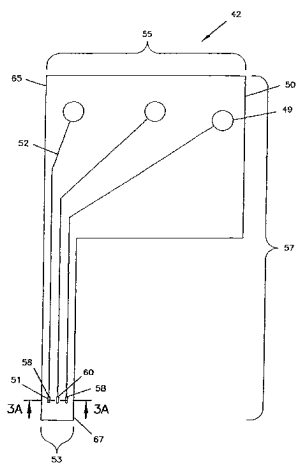

4,240,438 A 12/1980 Updike et al.
4,240,889 A 12/1980 Yoda et al.
4,241,438 A 12/1980 Kern
4,245,634 A 1/1981 Albisser et al.
4,247,297 A 1/1981 Berti et al.
4,255,500 A 3/1981 Hooke
4,259,540 A 3/1981 Sabia
4,271,449 A 6/1981 Grogan
4,275,225 A 6/1981 Krespan
4,318,784 A 3/1982 Higgins et al.
4,324,257 A 4/1982 Albarda et al.
4,327,725 A 5/1982 Cortese et al.
4,331,869 A 5/1982 Rollo
4,335,255 A 6/1982 Krespan
4,340,458 A 7/1982 Lerner et al.
4,344,438 A 8/1982 Schultz
4,352,960 A 10/1982 Dormer et al.
4,353,888 A 10/1982 Sefton
4,356,074 A 10/1982 Johnson
4,357,282 A 11/1982 Anderson et al.
4,365,637 A 12/1982 Johnson
4,366,033 A 12/1982 Richter et al.
4,374,013 A 2/1983 Enfors
4,375,399 A 3/1983 Havas et al.
4,384,586 A 5/1983 Christiansen
4,388,166 A 6/1983 Suzuki et al.
4,390,621 A 6/1983 Bauer
4,392,933 A 7/1983 Nakamura et al.
4,401,122 A 8/1983 Clark, Jr.
4,404,066 A 9/1983 Johnson
4,407,288 A 10/1983 Langer et al.
4,407,959 A 10/1983 Tsuji et al.
4,415,666 A 11/1983 D'Orazio et al.
4,417,588 A 11/1983 Houghton et al.
4,418,148 A 11/1983 Oberhardt
4,420,564 A 12/1983 Tsuji et al.
4,425,920 A 1/1984 Bourland et al.
4,427,004 A 1/1984 Miller
4,427,770 A 1/1984 Chen et al.
4,431,004 A 2/1984 Bessman et al.
4,431,507 A 2/1984 Nankai et al.
4,436,094 A 3/1984 Cerami
4,440,175 A 4/1984 Wilkins
4,443,218 A 4/1984 DeCant, Jr. et al.
4,444,892 A 4/1984 Malmros
4,450,842 A 5/1984 Zick et al.
4,458,686 A 7/1984 Clark, Jr.
4,461,691 A 7/1984 Frank
4,467,811 A 8/1984 Clark, Jr.
4,469,110 A 9/1984 Slama
4,476,003 A 10/1984 Frank et al.
4,477,314 A 10/1984 Richter et al.
4,478,976 A 10/1984 Goertz et al.
4,483,924 A 11/1984 Tsuji et al.
4,484,987 A 11/1984 Gough
4,494,950 A 1/1985 Fischell
4,499,249 A 2/1985 Nakagawa et al.
4,506,680 A 3/1985 Stokes
4,512,348 A 4/1985 Uchigaki et al.
4,522,690 A 6/1985 Venkatasetty
4,524,114 A 6/1985 Samuels et al.
4,526,661 A 7/1985 Steckhan et al.
4,526,948 A 7/1985 Resnick
4,527,240 A 7/1985 Kvitash
4,530,696 A 7/1985 Bisera et al.
4,534,356 A 8/1985 Papadakis
4,538,616 A 9/1985 Rogoff
4,543,955 A 10/1985 Schroeppel
4,544,869 A 10/1985 Pittaway
4,545,382 A 10/1985 Higgins et al.
4,552,840 A 11/1985 Riffer
4,560,534 A 12/1985 Kung et al.
4,561,443 A 12/1985 Hogrefe et al.
4,569,589 A 2/1986 Neufeld
4,571,292 A 2/1986 Liu et al.
4,573,994 A 3/1986 Fischell et al.
4,577,642 A 3/1986 Stokes
4,581,336 A 4/1986 Malloy et al.
4,595,011 A 6/1986 Phillips
4,595,479 A 6/1986 Kimura et al.
4,614,760 A 9/1986 Homan et al.
4,619,754 A 10/1986 Niki et al.
4,619,793 A 10/1986 Lee
4,627,445 A 12/1986 Garcia et al.
4,627,908 A 12/1986 Miller
4,633,878 A 1/1987 Bombardieri
4,633,881 A 1/1987 Moore et al.
4,637,403 A 1/1987 Garcia et al.
RE32,361 E 2/1987 Duggan
4,648,408 A 3/1987 Hutcheson et al.
4,650,547 A 3/1987 Gough
4,653,513 A 3/1987 Dombrowski
4,654,197 A 3/1987 Lilja et al.
4,655,880 A 4/1987 Liu
4,655,885 A 4/1987 Hill et al.
4,658,463 A 4/1987 Sugita et al.
4,663,824 A 5/1987 Kenmochi
4,671,288 A 6/1987 Gough
4,674,652 A 6/1987 Aten et al.
4,679,562 A 7/1987 Luksha
4,680,268 A 7/1987 Clark, Jr.
4,681,111 A 7/1987 Silvian
4,682,602 A 7/1987 Prohaska
4,684,537 A 8/1987 Graetzel et al.
4,685,463 A 8/1987 Williams
4,686,624 A 8/1987 Blum et al.
4,695,011 A 9/1987 Komatsubara et al.
4,698,582 A 10/1987 Braun et al.
4,703,756 A 11/1987 Gough et al.
4,711,245 A 12/1987 Higgins et al.
4,711,251 A 12/1987 Stokes
4,714,462 A 12/1987 DiDomenico
4,717,673 A 1/1988 Wrighton et al.
4,718,893 A 1/1988 Dorman et al.
4,721,601 A 1/1988 Wrighton et al.
4,721,677 A 1/1988 Clark, Jr.
4,726,378 A 2/1988 Kaplan
4,726,716 A 2/1988 McGuire
4,731,051 A 3/1988 Fischell
4,731,726 A 3/1988 Allen, III
4,747,828 A 5/1988 Tseo
4,749,985 A 6/1988 Corsberg
4,750,496 A 6/1988 Reinhart et al.
4,753,652 A 6/1988 Langer et al.
4,757,022 A 7/1988 Shults et al.
4,758,323 A 7/1988 Davis et al.
4,759,371 A 7/1988 Franetzki
4,759,828 A 7/1988 Young et al.
4,764,416 A 8/1988 Ueyama et al.
4,776,944 A 10/1988 Janata et al.
4,777,953 A 10/1988 Ash et al.
4,779,618 A 10/1988 Mund et al.
4,781,798 A 11/1988 Gough
4,784,736 A 11/1988 Lonsdale et al.
4,787,398 A 11/1988 Garcia et al.
4,795,707 A 1/1989 Niiyama et al.
4,796,634 A 1/1989 Huntsman et al.
4,803,243 A 2/1989 Fujimoto et al.
4,803,625 A 2/1989 Fu et al.
4,803,726 A 2/1989 Levine et al.
4,805,624 A 2/1989 Yao et al.
4,805,625 A 2/1989 Wyler

4,810,470 A 3/1989 Burkhardt et al.
4,813,424 A 3/1989 Wilkins
4,815,469 A 3/1989 Cohen et al.
4,820,399 A 4/1989 Senda et al.
4,822,337 A 4/1989 Newhouse et al.
4,830,959 A 5/1989 McNeil et al.
4,832,797 A 5/1989 Vadgama et al.
4,835,372 A 5/1989 Gombrich et al.
RE32,947 E 6/1989 Dormer et al.
4,837,049 A 6/1989 Byers et al.
4,838,887 A 6/1989 Idriss
4,840,893 A 6/1989 Hill et al.
RE32,974 E 7/1989 Porat et al.
4,844,076 A 7/1989 Lesho et al.
4,845,035 A 7/1989 Fanta et al.
4,848,351 A 7/1989 Finch
4,849,458 A 7/1989 Reed et al.
4,854,322 A 8/1989 Ash et al.
4,856,340 A 8/1989 Garrison
4,857,713 A 8/1989 Brown
4,858,617 A 8/1989 Sanders
4,870,561 A 9/1989 Love et al.
4,871,351 A 10/1989 Feingold
4,871,440 A 10/1989 Nagata et al.
4,874,499 A 10/1989 Smith et al.
4,874,500 A 10/1989 Madou et al.
4,889,744 A 12/1989 Quaid
4,890,620 A 1/1990 Gough
4,890,621 A 1/1990 Hakky
4,894,137 A 1/1990 Takizawa et al.
4,896,142 A 1/1990 Aycox et al.
4,897,162 A 1/1990 Lewandowski et al.
4,897,173 A 1/1990 Nankai et al.
4,897,457 A 1/1990 Nakamura et al.
4,899,839 A 2/1990 Dessertine et al.
4,909,908 A 3/1990 Ross et al.
4,911,794 A 3/1990 Parce et al.
4,917,800 A 4/1990 Lonsdale et al.
4,919,141 A 4/1990 Zier et al.
4,919,767 A 4/1990 Vadgama et al.
4,920,969 A 5/1990 Suzuki et al.
4,920,977 A 5/1990 Haynes
4,923,586 A 5/1990 Katayama et al.
4,924,127 A 5/1990 Boireau et al.
4,925,268 A 5/1990 Iyer et al.
4,927,407 A 5/1990 Dorman
4,927,516 A 5/1990 Yamaguchi et al.
4,931,795 A 6/1990 Gord
4,934,369 A 6/1990 Maxwell
4,935,105 A 6/1990 Churchouse
4,935,345 A 6/1990 Guilbeau et al.
4,936,956 A 6/1990 Wrighton
4,938,860 A 7/1990 Wogoman
4,944,299 A 7/1990 Silvian
4,945,045 A 7/1990 Forrest et al.
4,950,378 A 8/1990 Nagata
4,953,552 A 9/1990 DeMarzo
4,954,129 A 9/1990 Giuliani et al.
4,955,861 A 9/1990 Enegren et al.
4,957,115 A 9/1990 Selker
4,958,632 A 9/1990 Duggan
4,963,595 A 10/1990 Ward et al.
4,968,400 A 11/1990 Shimomura et al.
4,969,468 A 11/1990 Byers et al.
4,970,145 A 11/1990 Bennetto et al.
4,974,929 A 12/1990 Curry
4,979,509 A 12/1990 Hakky
4,984,929 A 1/1991 Rock et al.
4,986,271 A 1/1991 Wilkins
4,986,671 A 1/1991 Sun et al.
4,990,845 A 2/1991 Gord
4,991,582 A 2/1991 Byers et al.
4,994,068 A 2/1991 Hufnagle
4,994,167 A 2/1991 Shults et al.
4,995,402 A 2/1991 Smith et al.
5,001,054 A 3/1991 Wagner
5,002,054 A 3/1991 Ash et al.
5,002,572 A 3/1991 Picha
5,007,427 A 4/1991 Suzuki et al.
5,007,929 A 4/1991 Quaid
5,016,172 A 5/1991 Dessertine
5,016,201 A 5/1991 Bryan et al.
5,016,631 A 5/1991 Hogrefe
5,019,974 A 5/1991 Beckers
5,030,333 A 7/1991 Clark, Jr.
5,034,112 A 7/1991 Murase et al.
5,034,192 A 7/1991 Wrighton et al.
5,035,860 A 7/1991 Kleingeld et al.
5,036,860 A 8/1991 Leigh et al.
5,036,861 A 8/1991 Sembrowich et al.
5,037,527 A 8/1991 Hayashi et al.
5,049,487 A 9/1991 Phillips et al.
5,050,612 A 9/1991 Matsumura
5,055,171 A 10/1991 Peck
5,058,592 A 10/1991 Whisler
5,059,654 A 10/1991 Hou et al.
5,063,081 A 11/1991 Cozzette et al.
5,067,491 A 11/1991 Taylor, II et al.
5,068,536 A 11/1991 Rosenthal
5,070,535 A 12/1991 Hochmair et al.
5,073,500 A 12/1991 Saito et al.
5,074,977 A 12/1991 Cheung et al.
5,077,476 A 12/1991 Rosenthal
5,078,854 A 1/1992 Burgess et al.
5,082,550 A 1/1992 Rishpon et al.
5,082,786 A 1/1992 Nakamoto
5,084,828 A 1/1992 Kaufman et al.
5,088,981 A 2/1992 Howson et al.
5,089,112 A 2/1992 Skotheim et al.
5,094,951 A 3/1992 Rosenberg
5,095,904 A 3/1992 Seligman et al.
5,096,560 A 3/1992 Takai et al.
5,096,836 A 3/1992 Macho et al.
5,097,834 A 3/1992 Skrabal
5,101,814 A 4/1992 Palti
5,106,365 A 4/1992 Hernandez
5,108,564 A 4/1992 Szuminsky et al.
5,109,850 A 5/1992 Blanco et al.
5,111,539 A 5/1992 Hiruta et al.
5,111,818 A 5/1992 Suzuki et al.
5,114,678 A 5/1992 Crawford et al.
5,120,420 A 6/1992 Nankai et al.
5,120,421 A 6/1992 Glass et al.
5,126,034 A 6/1992 Carter et al.
5,126,247 A 6/1992 Palmer et al.
5,130,009 A 7/1992 Marsoner et al.
5,131,441 A 7/1992 Simpson et al.
5,133,069 A 7/1992 Asato et al.
5,133,856 A 7/1992 Yamaguchi et al.
5,134,391 A 7/1992 Okada
5,135,003 A 8/1992 Souma
5,139,023 A 8/1992 Stanley et al.
5,140,393 A 8/1992 Hijikihigawa et al.
5,140,985 A 8/1992 Schroeder et al.
5,141,868 A 8/1992 Shanks et al.
5,147,725 A 9/1992 Pinchuk
5,153,827 A 10/1992 Coutre et al.
5,161,532 A 11/1992 Joseph
5,165,407 A 11/1992 Wilson et al.
5,168,046 A 12/1992 Hamamoto et al.
5,171,689 A 12/1992 Kawaguri et al.
5,174,291 A 12/1992 Schoonen et al.

5,176,644 A 1/1993 Srisathapat et al.
5,176,662 A 1/1993 Bartholomew et al.
5,182,707 A 1/1993 Cooper et al.
5,184,359 A 2/1993 Tsukamura et al.
5,185,256 A 2/1993 Nankai et al.
5,190,041 A 3/1993 Palti
5,191,744 A 3/1993 Bowes
5,192,415 A 3/1993 Yoshioka et al.
5,192,416 A 3/1993 Wang et al.
5,193,539 A 3/1993 Schulman et al.
5,193,540 A 3/1993 Schulman et al.
5,197,322 A 3/1993 Indravudh
5,198,367 A 3/1993 Aizawa et al.
5,198,771 A 3/1993 Fidler et al.
5,200,051 A 4/1993 Cozzette et al.
5,202,261 A 4/1993 Musho et al.
5,205,920 A 4/1993 Oyama et al.
5,206,145 A 4/1993 Cattell
5,208,154 A 5/1993 Weaver et al.
5,209,229 A 5/1993 Gilli
5,215,887 A 6/1993 Saito
5,216,597 A 6/1993 Beckers
5,217,011 A 6/1993 Bisch
5,217,442 A 6/1993 Davis
5,217,595 A 6/1993 Smith et al.
5,227,042 A 7/1993 Zawodzinski et al.
5,229,282 A 7/1993 Yoshioka et al.
5,232,668 A 8/1993 Grant et al.
5,235,003 A 8/1993 Ward et al.
5,242,848 A 9/1993 Yeh
5,243,983 A 9/1993 Tarr et al.
5,246,867 A 9/1993 Lakowicz et al.
5,249,576 A 10/1993 Goldberger et al.
5,250,439 A 10/1993 Musho et al.
5,251,126 A 10/1993 Kahn et al.
5,257,971 A 11/1993 Lord et al.
5,257,980 A 11/1993 Van Antwerp et al.
5,259,769 A 11/1993 Cruise et al.
5,261,401 A 11/1993 Baker et al.
5,262,035 A 11/1993 Gregg et al.
5,262,305 A 11/1993 Heller et al.
5,264,103 A 11/1993 Yoshioka et al.
5,264,104 A 11/1993 Gregg et al.
5,264,106 A 11/1993 McAleer et al.
5,265,888 A 11/1993 Yamamoto et al.
5,266,179 A 11/1993 Nankai et al.
5,269,212 A 12/1993 Peters et al.
5,271,736 A 12/1993 Picha
5,271,815 A 12/1993 Wong
5,272,060 A 12/1993 Hamamoto et al.
5,275,159 A 1/1994 Griebel
5,276,610 A 1/1994 Maeda et al.
5,278,079 A 1/1994 Gubinski et al.
5,279,294 A 1/1994 Anderson et al.
5,282,848 A 2/1994 Schmitt
5,282,950 A 2/1994 Dietze et al.
5,284,156 A 2/1994 Schramm et al.
5,284,570 A 2/1994 Savage et al.
5,284,748 A 2/1994 Mroczkowski et al.
5,285,513 A 2/1994 Kaufman et al.
5,285,792 A 2/1994 Sjoquist et al.
5,286,362 A 2/1994 Hoenes et al.
5,286,364 A 2/1994 Yacynych et al.
5,288,636 A 2/1994 Pollmann et al.
5,291,887 A 3/1994 Stanley et al.
5,293,546 A 3/1994 Tadros et al.
5,299,571 A 4/1994 Mastrototaro
5,304,127 A 4/1994 Kawahara et al.
5,304,468 A 4/1994 Phillips et al.
5,307,263 A 4/1994 Brown
5,309,919 A 5/1994 Snell et al.
5,310,469 A 5/1994 Cunningham et al.
5,310,885 A 5/1994 Maier et al.
5,312,361 A 5/1994 Zadini et al.
5,312,446 A 5/1994 Holschbach et al.
5,314,450 A 5/1994 Thompson
5,314,471 A 5/1994 Brauker et al.
5,318,521 A 6/1994 Slettenmark
5,318,583 A 6/1994 Rabenau et al.
5,320,098 A 6/1994 Davidson
5,320,725 A 6/1994 Gregg et al.
5,322,063 A 6/1994 Allen et al.
5,324,303 A 6/1994 Strong et al.
5,324,316 A 6/1994 Schulman et al.
5,326,356 A 7/1994 Della Valle et al.
5,326,449 A 7/1994 Cunningham
5,328,460 A 7/1994 Lord et al.
5,330,521 A 7/1994 Cohen
5,330,634 A 7/1994 Wong et al.
5,331,966 A 7/1994 Bennett et al.
5,337,258 A 8/1994 Dennis
5,337,747 A 8/1994 Neftel
5,340,722 A 8/1994 Wolfbeis et al.
5,342,409 A 8/1994 Mullett
5,342,789 A 8/1994 Chick et al.
5,343,869 A 9/1994 Pross et al.
5,344,454 A 9/1994 Clarke et al.
5,348,788 A 9/1994 White
5,350,392 A 9/1994 Purcell et al.
5,350,407 A 9/1994 McClure et al.
5,350,412 A 9/1994 Hoegnelid et al.
5,352,348 A 10/1994 Young et al.
5,352,351 A 10/1994 White et al.
5,354,319 A 10/1994 Wyborny et al.
5,356,348 A 10/1994 Bellio et al.
5,356,786 A 10/1994 Heller et al.
5,358,514 A 10/1994 Schulman et al.
5,364,797 A 11/1994 Olson et al.
5,366,609 A 11/1994 White et al.
5,368,028 A 11/1994 Palti
5,368,562 A 11/1994 Blomquist et al.
5,370,622 A 12/1994 Livingston et al.
5,371,687 A 12/1994 Holmes, II et al.
5,372,133 A 12/1994 Hogen Esch
5,372,719 A 12/1994 Afeyan et al.
5,373,336 A 12/1994 Sugita
5,375,604 A 12/1994 Kelly et al.
5,376,070 A 12/1994 Purvis et al.
5,376,251 A 12/1994 Kaneko et al.
5,377,258 A 12/1994 Bro
5,378,628 A 1/1995 Gratzel et al.
5,379,238 A 1/1995 Stark
5,380,422 A 1/1995 Negishi et al.
5,380,536 A 1/1995 Hubbell et al.
5,382,346 A 1/1995 Uenoyama et al.
5,384,028 A 1/1995 Ito
5,387,327 A 2/1995 Khan
5,390,671 A 2/1995 Lord et al.
5,391,250 A 2/1995 Cheney, II et al.
5,393,903 A 2/1995 Gratzel et al.
5,395,504 A 3/1995 Saurer et al.
5,397,848 A 3/1995 Yang et al.
5,399,823 A 3/1995 McCusker
5,400,782 A 3/1995 Beaubiah
5,408,999 A 4/1995 Singh et al.
5,410,471 A 4/1995 Alyfuku et al.
5,410,474 A 4/1995 Fox
5,411,536 A 5/1995 Armstrong
5,411,647 A 5/1995 Johnson et al.
5,413,690 A 5/1995 Kost et al.
5,422,246 A 6/1995 Koopal et al.
5,426,032 A 6/1995 Phillips et al.

5,429,129 A 7/1995 Lovejoy et al.
5,431,160 A 7/1995 Wilkins
5,431,691 A 7/1995 Snell et al.
5,431,921 A 7/1995 Thombre
5,433,710 A 7/1995 VanAntwerp et al.
5,437,973 A 8/1995 Vadgama et al.
5,437,999 A 8/1995 Diebold et al.
5,438,984 A 8/1995 Schoendorfer
5,445,611 A 8/1995 Eppstein et al.
5,445,920 A 8/1995 Saito
5,451,260 A 9/1995 Versteeg et al.
5,452,173 A 9/1995 Brannon et al.
5,453,199 A 9/1995 Afeyan et al.
5,453,278 A 9/1995 Chan et al.
5,456,692 A 10/1995 Smith, Jr. et al.
5,456,940 A 10/1995 Funderburk
5,458,140 A 10/1995 Eppstein et al.
5,460,618 A 10/1995 Harreld
5,462,051 A 10/1995 Oka et al.
5,462,064 A 10/1995 D'Angelo et al.
5,462,525 A 10/1995 Srisathapat et al.
5,462,645 A 10/1995 Albery et al.
5,466,218 A 11/1995 Srisathapat et al.
5,469,846 A 11/1995 Khan
5,472,317 A 12/1995 Field et al.
5,476,460 A 12/1995 Montalvo
5,477,855 A 12/1995 Schindler et al.
5,482,473 A 1/1996 Lord et al.
5,484,404 A 1/1996 Schulman et al.
5,487,751 A 1/1996 Radons et al.
5,491,474 A 2/1996 Suni et al.
5,494,562 A 2/1996 Maley et al.
5,496,453 A 3/1996 Uenoyama et al.
5,497,772 A 3/1996 Schulman et al.
5,501,665 A 3/1996 Jhuboo et al.
5,501,956 A 3/1996 Wada et al.
5,505,709 A 4/1996 Funderburk et al.
5,505,713 A 4/1996 Van Antwerp
5,507,288 A 4/1996 Bocker et al.
5,508,171 A 4/1996 Walling et al.
5,509,410 A 4/1996 Hill et al.
5,514,103 A 5/1996 Srisathapat et al.
5,514,253 A 5/1996 Davis et al.
5,518,006 A 5/1996 Mawhirt et al.
5,520,787 A 5/1996 Hanagan et al.
5,522,865 A 6/1996 Schulman et al.
5,525,511 A 6/1996 D'Costa et al.
5,526,120 A 6/1996 Jina et al.
5,527,307 A 6/1996 Srisathapat et al.
5,529,676 A 6/1996 Maley et al.
5,531,878 A 7/1996 Vadgama et al.
5,532,686 A 7/1996 Urbas et al.
5,538,007 A 7/1996 Gorman
5,538,511 A 7/1996 Van Antwerp
5,540,828 A 7/1996 Yacynych
5,545,143 A 8/1996 Fischell
5,545,152 A 8/1996 Funderburk et al.
5,545,191 A 8/1996 Mann et al.
5,545,220 A 8/1996 Andrews et al.
5,545,223 A 8/1996 Neuenfeldt et al.
5,549,113 A 8/1996 Halleck et al.
5,549,115 A 8/1996 Morgan et al.
5,549,675 A 8/1996 Neuenfeldt et al.
5,552,027 A 9/1996 Birkle et al.
5,554,166 A 9/1996 Lange et al.
5,556,524 A 9/1996 Albers
5,560,357 A 10/1996 Faupel et al.
5,562,713 A 10/1996 Silvian
5,564,439 A 10/1996 Picha
5,565,085 A 10/1996 Ikeda et al.
5,567,302 A 10/1996 Song et al.
5,568,806 A 10/1996 Cheney, II et al.
5,569,186 A 10/1996 Lord et al.
5,569,212 A 10/1996 Brown
5,569,462 A 10/1996 Martinson et al.
5,571,395 A 11/1996 Park et al.
5,573,506 A 11/1996 Vasko
5,573,647 A 11/1996 Maley et al.
5,575,895 A 11/1996 Ikeda et al.
5,575,930 A 11/1996 Tietje Girault et al.
5,580,527 A 12/1996 Bell et al.
5,580,794 A 12/1996 Allen
5,582,184 A 12/1996 Erickson et al.
5,582,593 A 12/1996 Hultman
5,582,697 A 12/1996 Ikeda et al.
5,582,698 A 12/1996 Flaherty et al.
5,584,813 A 12/1996 Livingston et al.
5,584,876 A 12/1996 Bruchman et al.
5,586,553 A 12/1996 Halili et al.
5,587,273 A 12/1996 Yan et al.
5,589,326 A 12/1996 Deng et al.
5,589,563 A 12/1996 Ward et al.
5,590,651 A 1/1997 Shaffer et al.
5,593,440 A 1/1997 Brauker et al.
5,593,852 A 1/1997 Heller et al.
5,594,906 A 1/1997 Holmes, II et al.
5,596,150 A 1/1997 Arndt et al.
5,596,994 A 1/1997 Bro
5,601,435 A 2/1997 Quy
5,601,694 A 2/1997 Maley et al.
5,605,152 A 2/1997 Slate et al.
5,607,565 A 3/1997 Azarnia et al.
5,611,900 A 3/1997 Worden et al.
5,615,671 A 4/1997 Schoonen et al.
5,616,222 A 4/1997 Maley et al.
5,617,851 A 4/1997 Lipkovker
5,623,925 A 4/1997 Swenson et al.
5,624,537 A 4/1997 Turner et al.
5,628,309 A 5/1997 Brown
5,628,310 A 5/1997 Rao et al.
5,628,890 A 5/1997 Carter et al.
5,629,981 A 5/1997 Nerlikar
5,634,468 A 6/1997 Platt et al.
5,637,095 A 6/1997 Nason et al.
5,640,764 A 6/1997 Strojnik
5,640,954 A 6/1997 Pfeiffer et al.
5,643,212 A 7/1997 Coutre et al.
5,647,853 A 7/1997 Feldmann et al.
5,649,296 A 7/1997 MacLellan et al.
5,650,062 A 7/1997 Ikeda et al.
5,651,767 A 7/1997 Schulman et al.
5,651,869 A 7/1997 Yoshioka et al.
5,653,735 A 8/1997 Chen et al.
5,653,756 A 8/1997 Clarke et al.
5,653,863 A 8/1997 Genshaw et al.
5,658,250 A 8/1997 Blomquist et al.
5,658,330 A 8/1997 Carlisle et al.
5,660,163 A 8/1997 Schulman et al.
5,662,694 A 9/1997 Lidman et al.
5,665,065 A 9/1997 Colman et al.
5,667,983 A 9/1997 Abel et al.
5,670,031 A 9/1997 Hintsche et al.
5,678,571 A 10/1997 Brown
5,679,690 A 10/1997 Andre et al.
5,680,858 A 10/1997 Hansen et al.
5,682,233 A 10/1997 Brinda
5,686,717 A 11/1997 Knowles et al.
5,686,829 A 11/1997 Girault
5,695,473 A 12/1997 Olsen
5,695,623 A 12/1997 Michel et al.
5,695,949 A 12/1997 Galen et al.
5,701,894 A 12/1997 Cherry et al.

5,704,354 A 1/1998 Preidel et al.
5,704,922 A 1/1998 Brown
5,706,807 A 1/1998 Picha
5,707,502 A 1/1998 McCaffrey et al.
5,708,247 A 1/1998 McAleer et al.
5,710,630 A 1/1998 Essenpreis et al.
5,711,001 A 1/1998 Bussan et al.
5,711,297 A 1/1998 Iliff
5,711,861 A 1/1998 Ward et al.
5,711,862 A 1/1998 Sakoda et al.
5,711,868 A 1/1998 Maley et al.
5,713,888 A 2/1998 Neuenfeldt et al.
5,714,123 A 2/1998 Sohrab
5,718,234 A 2/1998 Warden et al.
5,720,733 A 2/1998 Brown
5,720,862 A 2/1998 Hamamoto et al.
5,721,783 A 2/1998 Anderson
5,722,397 A 3/1998 Eppstein
5,724,030 A 3/1998 Urbas et al.
5,727,548 A 3/1998 Hill et al.
5,730,124 A 3/1998 Yamauchi
5,730,654 A 3/1998 Brown
5,735,273 A 4/1998 Kurnik et al.
5,735,285 A 4/1998 Albert et al.
5,741,211 A 4/1998 Renirie et al.
5,741,330 A 4/1998 Brauker et al.
5,741,688 A 4/1998 Oxenbøll et al.
5,743,262 A 4/1998 Lepper, Jr. et al.
5,746,217 A 5/1998 Erickson et al.
5,748,103 A 5/1998 Flach et al.
5,749,907 A 5/1998 Mann
5,750,926 A 5/1998 Schulman et al.
5,756,632 A 5/1998 Ward et al.
5,770,028 A 6/1998 Maley et al.
5,771,001 A 6/1998 Cobb
5,771,890 A 6/1998 Tamada
5,772,586 A 6/1998 Heinonen et al.
5,777,060 A 7/1998 Van Antwerp
5,779,665 A 7/1998 Mastrototaro et al.
5,782,814 A 7/1998 Brown et al.
5,782,912 A 7/1998 Brauker et al.
5,785,681 A 7/1998 Indravudh
5,786,439 A 7/1998 Van Antwerp et al.
5,786,584 A 7/1998 Button et al.
5,787,900 A 8/1998 Butler et al.
5,788,678 A 8/1998 Van Antwerp
5,791,344 A 8/1998 Schulman et al.
5,792,117 A 8/1998 Brown
5,795,774 A 8/1998 Matsumoto et al.
5,798,065 A 8/1998 Picha
5,800,387 A 9/1998 Duffy et al.
5,800,420 A 9/1998 Gross
5,800,529 A 9/1998 Brauker et al.
5,804,048 A 9/1998 Wong et al.
5,807,315 A 9/1998 Van Antwerp et al.
5,807,375 A 9/1998 Gross et al.
5,807,406 A 9/1998 Brauker et al.
5,811,487 A 9/1998 Schulz, Jr. et al.
5,814,599 A 9/1998 Mitragotri et al.
5,820,551 A 10/1998 Hill et al.
5,820,570 A 10/1998 Erickson et al.
5,820,622 A 10/1998 Gross et al.
5,822,715 A 10/1998 Worthington et al.
5,825,488 A 10/1998 Kohl et al.
5,827,179 A 10/1998 Lichter et al.
5,827,183 A 10/1998 Kurnik et al.
5,827,184 A 10/1998 Netherly et al.
5,828,943 A 10/1998 Brown
5,830,341 A 11/1998 Gilmartin
5,832,448 A 11/1998 Brown
5,833,603 A 11/1998 Kovacs et al.
5,834,224 A 11/1998 Ruger et al.
5,836,887 A 11/1998 Oka et al.
5,836,989 A 11/1998 Shelton
5,837,454 A 11/1998 Cozzette et al.
5,837,546 A 11/1998 Allen et al.
5,837,728 A 11/1998 Purcell
5,840,020 A 11/1998 Heinonen et al.
5,840,240 A 11/1998 Stenoien et al.
5,842,983 A 12/1998 Abel et al.
5,843,140 A 12/1998 Strojnik
5,846,702 A 12/1998 Deng et al.
5,846,744 A 12/1998 Athey et al.
5,851,197 A 12/1998 Marano et al.
5,854,078 A 12/1998 Asher et al.
5,854,189 A 12/1998 Kruse et al.
5,857,967 A 1/1999 Frid et al.
5,857,983 A 1/1999 Douglas et al.
5,860,917 A 1/1999 Comanor et al.
5,861,009 A 1/1999 Armstrong et al.
5,861,019 A 1/1999 Sun et al.
5,862,803 A 1/1999 Besson et al.
5,871,465 A 2/1999 Vasko
5,871,514 A 2/1999 Wiklund et al.
5,872,713 A 2/1999 Douglas et al.
5,872,820 A 2/1999 Upadrasta
5,876,484 A 3/1999 Raskin et al.
5,879,163 A 3/1999 Brown et al.
5,879,311 A 3/1999 Duchon et al.
5,879,373 A 3/1999 Roper et al.
5,880,829 A 3/1999 Kauhaniemi et al.
5,882,494 A 3/1999 Van Antwerp
5,885,211 A 3/1999 Eppstein et al.
5,885,245 A 3/1999 Lynch et al.
5,887,133 A 3/1999 Brown et al.
5,895,371 A 4/1999 Levitas et al.
5,897,493 A 4/1999 Brown
5,897,578 A 4/1999 Wiklund et al.
5,898,025 A 4/1999 Burg et al.
5,899,855 A 5/1999 Brown
5,899,931 A 5/1999 Deschamp et al.
5,904,708 A 5/1999 Goedeke
5,913,310 A 6/1999 Brown
5,913,827 A 6/1999 Gorman
5,913,998 A 6/1999 Butler et al.
5,914,026 A 6/1999 Blubaugh, Jr. et al.
5,916,445 A 6/1999 Hjerten et al.
5,917,346 A 6/1999 Gord
5,918,603 A 7/1999 Brown
5,919,215 A 7/1999 Wiklund et al.
5,925,021 A 7/1999 Castellano et al.
5,928,130 A 7/1999 Schmidt
5,931,791 A 8/1999 Saltzstein et al.
5,931,814 A 8/1999 Alex et al.
5,933,136 A 8/1999 Brown
5,935,099 A 8/1999 Peterson et al.
5,935,785 A 8/1999 Reber et al.
5,940,801 A 8/1999 Brown
5,942,979 A 8/1999 Luppino
5,945,345 A 8/1999 Blatt et al.
5,947,749 A 9/1999 Rathburn
5,947,921 A 9/1999 Johnson et al.
5,948,512 A 9/1999 Kubota et al.
5,950,632 A 9/1999 Reber et al.
5,951,300 A 9/1999 Brown
5,951,492 A 9/1999 Douglas et al.
5,951,521 A 9/1999 Mastrototaro et al.
5,951,836 A 9/1999 McAleer et al.
5,954,643 A 9/1999 VanAntwerp et al.
5,954,685 A 9/1999 Tierney
5,954,700 A 9/1999 Kovelman
5,956,501 A 9/1999 Brown

5,957,854	A	9/1999	Besson et al.
5,957,890	A	9/1999	Mann et al.
5,957,903	A	9/1999	Mirzaee et al.
5,957,958	A	9/1999	Schulman et al.
5,959,050	A	9/1999	Mosbach et al.
5,960,403	A	9/1999	Brown
5,961,451	A	10/1999	Reber et al.
5,964,804	A	10/1999	Brauker et al.
5,964,993	A	10/1999	Blubaugh, Jr. et al.
5,965,380	A	10/1999	Heller et al.
5,968,839	A	10/1999	Blatt et al.
5,971,922	A	10/1999	Arita et al.
5,971,941	A	10/1999	Simons et al.
5,974,124	A	10/1999	Schlueter, Jr. et al.
5,120,420	A	11/1999	Nakai et al.
5,976,085	A	11/1999	Kimball et al.
5,977,476	A	11/1999	Guha et al.
5,981,294	A	11/1999	Blatt et al.
5,985,129	A	11/1999	Gough et al.
5,987,352	A	11/1999	Klein et al.
5,989,409	A	11/1999	Kurnik et al.
5,994,476	A	11/1999	Shin et al.
5,995,860	A	11/1999	Sun et al.
5,997,476	A	12/1999	Brown
5,999,848	A	12/1999	Gord et al.
5,999,849	A	12/1999	Gord et al.
6,001,067	A	12/1999	Shults et al.
6,001,471	A	12/1999	Bries et al.
6,002,954	A	12/1999	Van Antwerp et al.
6,002,961	A	12/1999	Mitragotri et al.
6,004,441	A	12/1999	Fujiwara et al.
6,007,845	A	12/1999	Domb et al.
6,011,984	A	1/2000	Van Antwerp et al.
6,013,113	A	1/2000	Mika
6,014,577	A	1/2000	Henning et al.
6,016,448	A	1/2000	Busacker et al.
6,017,328	A	1/2000	Fischell et al.
6,017,435	A	1/2000	Hassard et al.
6,018,678	A	1/2000	Mitragotri et al.
6,023,629	A	2/2000	Tamada
6,024,699	A	2/2000	Surwit et al.
6,026,320	A	2/2000	Carlson et al.
6,027,459	A	2/2000	Shain et al.
6,027,692	A	2/2000	Galen et al.
6,032,059	A	2/2000	Henning et al.
6,032,199	A	2/2000	Lim et al.
6,033,866	A	3/2000	Guo et al.
6,035,237	A	3/2000	Schulman et al.
6,040,194	A	3/2000	Chick et al.
6,041,253	A	3/2000	Kost et al.
6,043,437	A	3/2000	Schulman et al.
6,048,691	A	4/2000	Maracas
6,049,727	A	4/2000	Crothall
6,051,372	A	4/2000	Bayerl et al.
6,056,718	A	5/2000	Funderburk et al.
6,057,377	A	5/2000	Sasaki et al.
6,059,946	A	5/2000	Yukawa et al.
6,063,459	A	5/2000	Velte
6,063,637	A	5/2000	Arnold et al.
6,066,083	A	5/2000	Slater et al.
6,066,243	A	5/2000	Anderson et al.
6,066,448	A	5/2000	Wohlstadter et al.
6,067,474	A	5/2000	Schulman et al.
6,068,615	A	5/2000	Brown et al.
6,071,249	A	6/2000	Cunningham et al.
6,071,251	A	6/2000	Cunningham et al.
6,071,294	A	6/2000	Simons et al.
6,071,391	A	6/2000	Gotoh et al.
6,071,406	A	6/2000	Tsou
6,073,049	A	6/2000	Alt et al.
6,081,735	A	6/2000	Diab et al.
6,081,736	A	6/2000	Colvin et al.
6,083,710	A	7/2000	Heller et al.
6,088,608	A	7/2000	Schulman et al.
6,091,975	A	7/2000	Daddona et al.
6,091,976	A	7/2000	Pfeiffer et al.
6,091,987	A	7/2000	Thompson
6,093,156	A	7/2000	Cunningham et al.
6,093,167	A	7/2000	Houben et al.
6,093,172	A	7/2000	Funderburk et al.
6,097,831	A	8/2000	Wieck et al.
6,099,484	A	8/2000	Douglas et al.
6,101,478	A	8/2000	Brown
6,103,033	A	8/2000	Say et al.
6,103,533	A	8/2000	Hassard et al.
6,106,780	A	8/2000	Douglas et al.
6,107,083	A	8/2000	Collins et al.
6,110,148	A	8/2000	Brown et al.
6,110,152	A	8/2000	Kovelman
4,407,288	A	9/2000	Langer et al.
6,113,578	A	9/2000	Brown
6,115,634	A	9/2000	Donders et al.
6,117,290	A	9/2000	Say et al.
6,119,028	A	9/2000	Schulman et al.
6,120,676	A	9/2000	Heller et al.
6,121,009	A	9/2000	Heller et al.
6,122,351	A	9/2000	Schlueter, Jr. et al.
6,122,536	A	9/2000	Sun et al.
6,125,978	A	10/2000	Ando et al.
6,130,623	A	10/2000	MacLellan et al.
6,134,461	A	10/2000	Say et al.
6,134,504	A	10/2000	Douglas et al.
6,135,978	A	10/2000	Houben et al.
6,139,718	A	10/2000	Kurnik et al.
6,141,573	A	10/2000	Kurnik et al.
6,142,939	A	11/2000	Eppstein et al.
6,142,972	A	11/2000	Cheikh
6,143,164	A	11/2000	Heller et al.
6,144,837	A	11/2000	Quy
6,144,869	A	11/2000	Berner et al.
6,144,922	A	11/2000	Douglas et al.
6,148,094	A	11/2000	Kinsella
6,150,128	A	11/2000	Uretsky
6,151,586	A	11/2000	Brown
6,153,062	A	11/2000	Saito et al.
6,153,069	A	11/2000	Pottgen et al.
6,154,675	A	11/2000	Juran et al.
6,156,050	A	12/2000	Davis et al.
6,159,147	A	12/2000	Lichter et al.
6,161,095	A	12/2000	Brown
6,162,611	A	12/2000	Heller et al.
6,162,639	A	12/2000	Douglas
6,167,362	A	12/2000	Brown et al.
6,167,614	B1	1/2001	Tuttle et al.
6,168,563	B1	1/2001	Brown
6,170,318	B1	1/2001	Lewis
6,175,752	B1	1/2001	Say et al.
6,180,416	B1	1/2001	Kurnik et al.
6,186,145	B1	2/2001	Brown
6,187,062	B1	2/2001	Oweis et al.
6,189,536	B1	2/2001	Martinez et al.
6,192,891	B1	2/2001	Gravel et al.
6,193,873	B1	2/2001	Ohara et al.
6,196,970	B1	3/2001	Brown
6,198,957	B1	3/2001	Green
6,200,265	B1	3/2001	Walsh et al.
6,200,772	B1	3/2001	Vadgama et al.
6,201,979	B1	3/2001	Kurnik et al.
6,201,980	B1	3/2001	Darrow et al.
6,201,993	B1	3/2001	Kruse et al.
6,206,841	B1	3/2001	Cunningham et al.
6,206,856	B1	3/2001	Mahurkar

6,207,400	B1	3/2001	Kwon
6,208,894	B1	3/2001	Schulman et al.
6,210,272	B1	4/2001	Brown
6,210,976	B1	4/2001	Sabbadini
6,212,416	B1	4/2001	Ward et al.
6,212,424	B1	4/2001	Robinson
6,214,185	B1	4/2001	Offenbacher et al.
6,219,565	B1	4/2001	Cupp et al.
6,223,083	B1	4/2001	Rosar
6,223,471	B1	5/2001	Barber
6,224,745	B1	5/2001	Baltruschat
6,229,454	B1	5/2001	Heikkilä et al.
6,230,059	B1	5/2001	Duffin
6,231,879	B1	5/2001	Li et al.
6,232,130	B1	5/2001	Wolf
6,232,370	B1	5/2001	Kubota et al.
6,232,783	B1	5/2001	Merrill
6,233,080	B1	5/2001	Brenner et al.
6,233,471	B1	5/2001	Berner et al.
6,233,539	B1	5/2001	Brown
6,239,925	B1	5/2001	Ardrey et al.
6,241,704	B1	6/2001	Peterson et al.
6,241,862	B1	6/2001	McAleer et al.
6,241,863	B1	6/2001	Monbouquette
6,246,330	B1	6/2001	Nielsen
6,246,992	B1	6/2001	Brown
6,248,065	B1	6/2001	Brown
6,248,067	B1	6/2001	Causey, III et al.
6,248,093	B1	6/2001	Moberg
6,251,260	B1	6/2001	Heller et al.
6,251,280	B1	6/2001	Dai et al.
6,252,032	B1	6/2001	Van Antwerp et al.
6,253,804	B1	7/2001	Safabash
6,254,586	B1	7/2001	Mann et al.
6,256,522	B1	7/2001	Schultz
6,256,643	B1	7/2001	Cork et al.
6,259,587	B1	7/2001	Sheldon et al.
6,259,937	B1	7/2001	Schulman et al.
6,260,022	B1	7/2001	Brown
6,264,825	B1	7/2001	Blackburn et al.
6,266,645	B1	7/2001	Simpson
6,267,724	B1	7/2001	Taylor
6,268,161	B1	7/2001	Han et al.
6,268,913	B1	7/2001	Rising
6,270,445	B1	8/2001	Dean, Jr. et al.
6,272,364	B1	8/2001	Kurnik
6,272,480	B1	8/2001	Tresp et al.
6,274,285	B1	8/2001	Gries et al.
6,274,686	B1	8/2001	Mosbach et al.
6,275,717	B1	8/2001	Gross et al.
6,275,737	B1	8/2001	Mann
6,280,416	B1	8/2001	Van Antwerp et al.
6,280,587	B1	8/2001	Matsumoto
6,281,006	B1	8/2001	Heller et al.
6,283,943	B1	9/2001	Dy et al.
6,284,126	B1	9/2001	Kurnik et al.
6,284,478	B1	9/2001	Heller et al.
6,285,897	B1	9/2001	Kilcoyne et al.
6,289,238	B1	9/2001	Besson et al.
6,293,925	B1	9/2001	Safabash et al.
6,294,281	B1	9/2001	Heller
6,295,463	B1	9/2001	Stenzler
6,295,506	B1	9/2001	Heinonen et al.
6,298,254	B2	10/2001	Tamada
6,299,578	B1	10/2001	Kurnik et al.
6,299,757	B1	10/2001	Feldman et al.
6,300,002	B1	10/2001	Webb et al.
6,301,499	B1	10/2001	Carlson et al.
6,304,766	B1	10/2001	Colvin, Jr.
6,309,351	B1	10/2001	Kurnik et al.
6,309,384	B1	10/2001	Harrington et al.
6,309,526	B1	10/2001	Fujiwara et al.
6,309,884	B1	10/2001	Cooper et al.
6,310,110	B1	10/2001	Markowitz et al.
6,315,721	B2	11/2001	Schulman et al.
6,315,738	B1	11/2001	Nishikawa et al.
6,319,540	B1	11/2001	Van Antwerp et al.
6,319,566	B1	11/2001	Polanyi et al.
6,320,357	B1	11/2001	Peters et al.
6,324,428	B1	11/2001	Weinberg et al.
6,325,978	B1	12/2001	Labuda et al.
6,325,979	B1	12/2001	Hahn et al.
6,326,160	B1	12/2001	Dunn et al.
6,329,161	B1	12/2001	Heller et al.
6,329,929	B1	12/2001	Weijand et al.
6,330,426	B2	12/2001	Brown et al.
6,330,464	B1	12/2001	Colvin, Jr. et al.
6,331,518	B2	12/2001	Hemm et al.
6,334,778	B1	1/2002	Brown
6,336,900	B1	1/2002	Alleckson et al.
6,338,790	B1	1/2002	Feldman et al.
6,340,421	B1	1/2002	Vachon et al.
6,341,232	B1	1/2002	Conn et al.
6,343,225	B1	1/2002	Clark, Jr.
6,356,776	B1	3/2002	Berner et al.
6,358,237	B1	3/2002	Paukovits, Jr. et al.
6,360,888	B1	3/2002	McIvor et al.
6,363,282	B1	3/2002	Nichols et al.
6,365,670	B1	4/2002	Fry
6,366,793	B1	4/2002	Bell et al.
6,366,794	B1	4/2002	Moussy et al.
6,368,141	B1	4/2002	VanAntwerp et al.
6,368,274	B1	4/2002	Van Antwerp et al.
6,370,410	B2	4/2002	Kurnik et al.
6,379,301	B1	4/2002	Worthington et al.
6,379,317	B1	4/2002	Kintzig et al.
6,383,767	B1	5/2002	Polak
6,387,048	B1	5/2002	Schulman et al.
6,391,643	B1	5/2002	Chen et al.
6,393,318	B1	5/2002	Conn et al.
6,398,562	B1	6/2002	Butler et al.
6,398,727	B1	6/2002	Bui et al.
6,402,689	B1	6/2002	Scarantino et al.
6,402,691	B1	6/2002	Peddicord et al.
6,405,066	B1	6/2002	Essenpreis et al.
6,406,066	B1	6/2002	Uegane
6,406,426	B1	6/2002	Reuss et al.
6,409,674	B1	6/2002	Brockway et al.
6,413,393	B1	7/2002	Van Antwerp et al.
6,416,471	B1	7/2002	Kumar et al.
6,418,332	B1	7/2002	Mastrototaro et al.
6,418,346	B1	7/2002	Nelson et al.
6,424,847	B1	7/2002	Mastrototaro et al.
6,424,867	B1	7/2002	Snell et al.
6,427,088	B1	7/2002	Bowman, IV et al.
6,434,409	B1	8/2002	Pfeiffer et al.
6,438,414	B1	8/2002	Conn et al.
6,440,068	B1	8/2002	Brown et al.
6,442,433	B1	8/2002	Linberg
6,442,637	B1	8/2002	Hawkins et al.
6,443,942	B2	9/2002	Van Antwerp et al.
6,447,448	B1	9/2002	Ishikawa et al.
6,447,542	B1	9/2002	Weadock
6,454,710	B1	9/2002	Ballerstadt et al.
6,459,917	B1	10/2002	Gowda et al.
6,461,496	B1	10/2002	Feldman et al.
6,462,162	B2	10/2002	Van Antwerp et al.
6,464,687	B1	10/2002	Ishikawa et al.
6,464,848	B1	10/2002	Matsumoto
6,466,810	B1	10/2002	Ward et al.
6,468,222	B1	10/2002	Mault et al.
6,469,526	B1	10/2002	Franklin

6,471,645	B1	10/2002	Warkentin et al.
6,471,689	B1	10/2002	Joseph et al.
6,472,122	B1	10/2002	Schulman et al.
6,475,180	B2	11/2002	Peterson et al.
6,475,750	B1	11/2002	Han et al.
6,477,392	B1	11/2002	Honigs et al.
6,477,395	B2	11/2002	Schulman et al.
6,478,736	B1	11/2002	Mault
6,480,730	B2	11/2002	Darrow et al.
6,481,440	B2	11/2002	Gielen et al.
6,482,158	B2	11/2002	Mault
6,482,604	B2	11/2002	Kwon
6,484,045	B1	11/2002	Holker et al.
6,484,046	B1	11/2002	Say et al.
6,485,138	B1	11/2002	Kubota et al.
6,485,465	B2	11/2002	Moberg et al.
6,494,830	B1	12/2002	Wessel
6,496,728	B2	12/2002	Li et al.
6,496,729	B2	12/2002	Thompson
6,498,043	B1	12/2002	Schulman et al.
6,498,941	B1	12/2002	Jackson
6,505,059	B1	1/2003	Kollias et al.
6,512,939	B1	1/2003	Colvin et al.
6,513,532	B2	2/2003	Mault et al.
6,514,718	B2	2/2003	Heller et al.
6,515,593	B1	2/2003	Stark et al.
6,520,326	B2	2/2003	McIvor et al.
6,520,997	B1	2/2003	Pekkarinen et al.
6,526,298	B1	2/2003	Khalil et al.
6,527,729	B1	3/2003	Turcott
6,528,584	B2	3/2003	Kennedy et al.
6,529,755	B2	3/2003	Kurnik et al.
6,529,772	B2	3/2003	Carlson et al.
6,530,915	B1	3/2003	Eppstein et al.
6,534,322	B1	3/2003	Sabbadini
6,534,323	B1	3/2003	Sabbadini
6,535,753	B1	3/2003	Raskas
6,537,243	B1	3/2003	Henning et al.
6,537,318	B1	3/2003	Ita et al.
6,540,675	B2	4/2003	Aceti et al.
6,541,107	B1	4/2003	King et al.
6,544,212	B2	4/2003	Galley et al.
6,545,085	B2	4/2003	Kilgour et al.
6,546,268	B1	4/2003	Ishikawa et al.
6,546,269	B1	4/2003	Kurnik
6,547,839	B2	4/2003	Zhang et al.
6,549,796	B2	4/2003	Sohrab
6,551,276	B1	4/2003	Mann et al.
6,551,494	B1	4/2003	Heller et al.
6,551,496	B1	4/2003	Moles et al.
6,553,244	B2	4/2003	Lesho et al.
6,554,798	B1	4/2003	Mann et al.
6,558,320	B1	5/2003	Causey, III et al.
6,558,321	B1	5/2003	Burd et al.
6,558,351	B1	5/2003	Steil et al.
6,560,471	B1	5/2003	Heller et al.
6,561,978	B1	5/2003	Conn et al.
6,562,001	B2	5/2003	Lebel et al.
6,564,105	B2	5/2003	Starkweather et al.
6,565,509	B1	5/2003	Say et al.
6,569,521	B1	5/2003	Sheridan et al.
6,571,128	B2	5/2003	Lebel et al.
6,571,200	B1	5/2003	Mault
6,572,545	B2	6/2003	Knobbe et al.
6,574,490	B2	6/2003	Abbink et al.
6,575,905	B2	6/2003	Knobbe et al.
6,576,101	B1	6/2003	Heller et al.
6,576,117	B1	6/2003	Iketaki et al.
6,577,899	B2	6/2003	Lebel et al.
6,579,498	B1	6/2003	Eglise
6,579,690	B1	6/2003	Bonnecaze et al.
6,584,335	B1	6/2003	Haar et al.
6,585,644	B2	7/2003	Lebel et al.
6,585,675	B1	7/2003	O'Mahony et al.
6,585,763	B1	7/2003	Keilman et al.
6,587,705	B1	7/2003	Kim et al.
6,588,644	B2	7/2003	Simon
6,589,205	B1	7/2003	Meadows
6,589,229	B1	7/2003	Connelly et al.
6,591,125	B1	7/2003	Buse et al.
6,591,126	B2	7/2003	Roeper et al.
6,594,514	B2	7/2003	Berner et al.
6,595,919	B2	7/2003	Berner et al.
6,595,929	B2	7/2003	Stivoric et al.
6,602,678	B2	8/2003	Kwon et al.
6,602,909	B1	8/2003	Jarowski
6,605,072	B2	8/2003	Struys et al.
6,605,200	B1	8/2003	Mao et al.
6,605,201	B1	8/2003	Mao et al.
6,607,509	B2	8/2003	Bobroff et al.
6,607,658	B1	8/2003	Heller et al.
6,610,012	B2	8/2003	Mault
6,612,306	B1	9/2003	Mault
6,612,984	B1	9/2003	Kerr, II
6,613,379	B2	9/2003	Ward et al.
6,615,078	B1	9/2003	Burson et al.
6,616,819	B1	9/2003	Liamos et al.
6,618,603	B2	9/2003	Varalli et al.
6,618,934	B1	9/2003	Feldman et al.
6,620,106	B2	9/2003	Mault
6,620,137	B2	9/2003	Kirchhofer et al.
6,627,058	B1	9/2003	Chan
6,629,776	B2	10/2003	Bell et al.
6,629,934	B2	10/2003	Mault et al.
6,633,772	B2	10/2003	Ford et al.
6,635,014	B2	10/2003	Starkweather et al.
6,635,167	B1	10/2003	Batman et al.
6,641,533	B2	11/2003	Causey, III et al.
6,642,015	B2	11/2003	Vachon et al.
6,644,321	B1	11/2003	Behm
6,645,142	B2	11/2003	Braig et al.
6,645,181	B1	11/2003	Lavi et al.
6,648,821	B2	11/2003	Lebel et al.
6,653,091	B1	11/2003	Dunn et al.
6,654,625	B1	11/2003	Say et al.
6,659,948	B2	12/2003	Lebel et al.
6,668,196	B1	12/2003	Villegas et al.
6,671,554	B2	12/2003	Gibson et al.
6,673,596	B1	1/2004	Sayler et al.
6,673,625	B2	1/2004	Satcher, Jr. et al.
6,682,938	B1	1/2004	Satcher, Jr. et al.
6,683,040	B2	1/2004	Bragulla et al.
6,683,535	B1	1/2004	Utke
6,687,522	B2	2/2004	Tamada
6,687,546	B2	2/2004	Lebel et al.
6,689,056	B1	2/2004	Kilcoyne et al.
6,689,091	B2	2/2004	Bui et al.
6,689,265	B2	2/2004	Heller et al.
6,693,069	B2	2/2004	Korber et al.
6,694,158	B2	2/2004	Polak
6,694,191	B2	2/2004	Starkweather et al.
6,695,860	B1	2/2004	Ward et al.
6,699,218	B2	3/2004	Flaherty et al.
6,699,383	B2	3/2004	Lemire et al.
6,702,857	B2	3/2004	Brauker et al.
6,704,587	B1	3/2004	Kumar et al.
6,705,883	B1	3/2004	Ku
6,708,049	B1	3/2004	Berson et al.
6,711,423	B2	3/2004	Colvin, Jr.
6,721,587	B2	4/2004	Gough
6,723,046	B2	4/2004	Lichtenstein et al.
6,728,560	B2	4/2004	Kollias et al.

6,730,200	B1	5/2004	Stewart et al.
6,731,976	B2	5/2004	Penn et al.
6,733,446	B2	5/2004	Lebel et al.
6,734,162	B2	5/2004	Van Antwerp et al.
6,735,183	B2	5/2004	O'Toole et al.
6,736,777	B2	5/2004	Kim et al.
6,737,401	B2	5/2004	Kim et al.
6,738,654	B2	5/2004	Sohrab
6,740,075	B2	5/2004	Lebel et al.
6,741,163	B1	5/2004	Roberts
6,741,876	B1	5/2004	Scecina et al.
6,741,877	B1	5/2004	Shults et al.
6,749,587	B2	6/2004	Flaherty
6,750,311	B1	6/2004	Van Antwerp et al.
6,758,810	B2	7/2004	Lebel et al.
6,766,183	B2	7/2004	Walsh et al.
6,766,201	B2	7/2004	Von Arx et al.
6,768,425	B2	7/2004	Flaherty et al.
6,770,030	B1	8/2004	Schaupp et al.
6,770,729	B2	8/2004	Van Antwerp
6,771,995	B2	8/2004	Kurnik et al.
6,773,563	B2	8/2004	Matsumoto
6,773,565	B2	8/2004	Ono et al.
6,780,297	B2	8/2004	Matsumoto et al.
6,780,871	B2	8/2004	Glick et al.
6,784,274	B2	8/2004	Van Antwerp et al.
6,790,178	B1	9/2004	Mault et al.
6,793,802	B2	9/2004	Lee et al.
6,794,195	B2	9/2004	Colvin, Jr.
6,799,149	B2	9/2004	Hartlaub
6,800,451	B2	10/2004	Nikolaitchik et al.
6,801,041	B2	10/2004	Karinka et al.
6,801,420	B2	10/2004	Talbot et al.
6,802,957	B2	10/2004	Jung et al.
6,804,544	B2	10/2004	Van Antwerp et al.
6,809,507	B2	10/2004	Morgan et al.
6,809,653	B1	10/2004	Mann et al.
6,810,290	B2	10/2004	Lebel et al.
6,811,533	B2	11/2004	Lebel et al.
6,811,534	B2	11/2004	Bowman, IV et al.
6,811,659	B2	11/2004	Vachon et al.
6,812,031	B1	11/2004	Carlsson
6,813,516	B2	11/2004	Ujhelyi et al.
6,813,519	B2	11/2004	Lebel et al.
6,815,186	B2	11/2004	Clark, Jr.
6,816,742	B2	11/2004	Kim et al.
6,835,553	B2	12/2004	Han et al.
RE38,681	E	1/2005	Kurnik et al.
6,840,912	B2	1/2005	Kloepfer et al.
6,840,922	B2	1/2005	Nielsen et al.
6,844,023	B2	1/2005	Schulman et al.
6,849,237	B2	2/2005	Housefield et al.
6,850,790	B2	2/2005	Berner et al.
6,852,500	B1	2/2005	Hoss et al.
6,852,694	B2	2/2005	Van Antwerp et al.
6,853,854	B1	2/2005	Proniewicz et al.
6,855,115	B2	2/2005	Fonseca et al.
6,856,928	B2	2/2005	Harmon
6,858,403	B2	2/2005	Han et al.
6,862,465	B2	3/2005	Shults et al.
6,862,466	B2	3/2005	Ackerman
6,872,200	B2	3/2005	Mann et al.
6,873,268	B2	3/2005	Lebel et al.
6,875,386	B1	4/2005	Ward et al.
6,879,849	B2	4/2005	Begic
6,881,551	B2	4/2005	Heller et al.
6,882,940	B2	4/2005	Potts et al.
6,885,883	B2	4/2005	Parris et al.
6,891,317	B2	5/2005	Pei et al.
6,892,085	B2	5/2005	McIvor et al.
6,893,552	B1	5/2005	Wang et al.
6,895,263	B2	5/2005	Shin et al.
6,899,683	B2	5/2005	Mault et al.
6,899,684	B2	5/2005	Mault et al.
6,902,905	B2	6/2005	Burson et al.
6,904,301	B2	6/2005	Raskas
6,907,127	B1	6/2005	Kravitz et al.
6,915,147	B2	7/2005	Lebel et al.
6,918,874	B1	7/2005	Hatch et al.
6,922,578	B2	7/2005	Eppstein et al.
6,922,584	B2	7/2005	Wang et al.
RE38,775	E	8/2005	Kurnik et al.
6,923,764	B2	8/2005	Aceti et al.
6,923,936	B2	8/2005	Swanson et al.
6,927,246	B2	8/2005	Noronha et al.
6,931,327	B2	8/2005	Goode, Jr. et al.
6,932,084	B2	8/2005	Estes et al.
6,932,894	B2	8/2005	Mao et al.
6,936,006	B2	8/2005	Sabra
6,936,029	B2	8/2005	Mann et al.
6,940,590	B2	9/2005	Colvin, Jr. et al.
6,941,163	B2	9/2005	Ford et al.
6,946,996	B2	9/2005	Koyama
6,950,708	B2	9/2005	Bowman, IV et al.
6,952,603	B2	10/2005	Gerber et al.
6,954,673	B2	10/2005	Von Arx et al.
6,955,650	B2	10/2005	Mault et al.
6,957,102	B2	10/2005	Silver et al.
6,957,107	B2	10/2005	Rogers et al.
6,958,705	B2	10/2005	Lebel et al.
6,965,791	B1	11/2005	Hitchcock et al.
6,968,294	B2	11/2005	Gutta et al.
6,968,375	B1	11/2005	Brown
6,973,706	B2	12/2005	Say et al.
6,974,437	B2	12/2005	Lebel et al.
6,978,182	B2	12/2005	Mazar et al.
6,979,326	B2	12/2005	Mann et al.
6,990,366	B2	1/2006	Say et al.
6,991,096	B2	1/2006	Gottlieb et al.
6,997,907	B2	2/2006	Safabash et al.
6,997,920	B2	2/2006	Mann et al.
6,998,247	B2	2/2006	Monfre et al.
6,999,810	B2	2/2006	Berner et al.
7,003,336	B2	2/2006	Holker et al.
7,003,341	B2	2/2006	Say et al.
7,004,901	B2	2/2006	Fish
7,005,857	B2	2/2006	Stiene et al.
7,011,630	B2	3/2006	Desai et al.
7,016,721	B2	3/2006	Lee et al.
7,018,366	B2	3/2006	Easter
7,018,568	B2	3/2006	Tierney
7,022,072	B2	4/2006	Fox et al.
7,024,236	B2	4/2006	Ford et al.
7,024,245	B2	4/2006	Lebel et al.
7,025,743	B2	4/2006	Mann et al.
7,029,444	B2	4/2006	Shin et al.
7,039,810	B1	5/2006	Nichols
7,041,468	B2	5/2006	Drucker et al.
7,049,277	B2	5/2006	Bragulla et al.
7,052,472	B1	5/2006	Miller et al.
7,052,483	B2	5/2006	Wojcik
7,056,302	B2	6/2006	Douglas
7,070,580	B2	7/2006	Nielsen
7,072,718	B2	7/2006	Von Arx et al.
7,072,802	B2	7/2006	Hartlaub
7,074,307	B2	7/2006	Simpson et al.
7,081,195	B2	7/2006	Simpson et al.
7,082,334	B2	7/2006	Boute et al.
7,098,803	B2	8/2006	Mann et al.
7,108,778	B2	9/2006	Simpson et al.
7,109,878	B2	9/2006	Mann et al.
7,110,803	B2	9/2006	Shults et al.

7,113,821	B1	9/2006	Sun et al.
7,115,884	B1	10/2006	Walt et al.
7,133,710	B2	11/2006	Acosta et al.
7,134,999	B2	11/2006	Brauker et al.
7,136,689	B2	11/2006	Shults et al.
7,137,964	B2	11/2006	Flaherty
7,150,975	B2	12/2006	Tamada et al.
7,163,511	B2	1/2007	Conn et al.
7,166,074	B2	1/2007	Reghabi et al.
7,171,274	B2	1/2007	Starkweather et al.
7,177,690	B2	2/2007	Woods et al.
7,183,068	B2	2/2007	Burson et al.
7,183,102	B2	2/2007	Monfre et al.
7,187,528	B2	3/2007	Talbot et al.
7,189,341	B2	3/2007	Li et al.
7,190,988	B2	3/2007	Say et al.
7,192,450	B2	3/2007	Brauker et al.
7,198,606	B2	4/2007	Boecker et al.
7,203,549	B2	4/2007	Schommer et al.
7,207,974	B2	4/2007	Safabash et al.
7,226,978	B2	6/2007	Tapsak et al.
7,228,163	B2	6/2007	Ackerman
7,233,817	B2	6/2007	Yen
7,248,929	B2	7/2007	Meadows et al.
7,261,691	B1	8/2007	Asomani
7,267,665	B2	9/2007	Steil et al.
7,276,029	B2	10/2007	Goode, Jr. et al.
7,295,867	B2	11/2007	Berner et al.
7,310,544	B2	12/2007	Brister et al.
7,318,816	B2	1/2008	Bobroff et al.
7,329,239	B2	2/2008	Safabash et al.
7,602,310	B2	10/2009	Mann et al.
2001/0011224	A1	8/2001	Brown
2001/0016310	A1	8/2001	Brown et al.
2001/0016682	A1	8/2001	Berner et al.
2001/0016683	A1	8/2001	Darrow et al.
2001/0020124	A1	9/2001	Tamada
2001/0029340	A1	10/2001	Mault et al.
2001/0032278	A1	10/2001	Brown et al.
2001/0037060	A1	11/2001	Thompson et al.
2001/0037069	A1	11/2001	Carlson et al.
2001/0039504	A1	11/2001	Linberg et al.
2001/0041830	A1	11/2001	Varalli et al.
2001/0044581	A1	11/2001	Mault
2001/0044588	A1	11/2001	Mault
2001/0047125	A1	11/2001	Quy
2001/0049096	A1	12/2001	Brown
2001/0049470	A1	12/2001	Mault et al.
2002/0002326	A1	1/2002	Causey et al.
2002/0002328	A1	1/2002	Tamada
2002/0004640	A1	1/2002	Conn et al.
2002/0009810	A1	1/2002	O'Connor et al.
2002/0010414	A1	1/2002	Coston et al.
2002/0016530	A1	2/2002	Brown
2002/0019022	A1	2/2002	Dunn et al.
2002/0019330	A1	2/2002	Murray et al.
2002/0019586	A1	2/2002	Teller et al.
2002/0019748	A1	2/2002	Brown
2002/0022883	A1	2/2002	Burg
2002/0023852	A1	2/2002	Mcivor et al.
2002/0026111	A1	2/2002	Ackerman
2002/0026937	A1	3/2002	Mault
2002/0027164	A1	3/2002	Mault et al.
2002/0028995	A1	3/2002	Mault
2002/0040208	A1	4/2002	Flaherty et al.
2002/0042090	A1	4/2002	Heller et al.
2002/0042561	A1	4/2002	Schulman et al.
2002/0045808	A1	4/2002	Ford et al.
2002/0047867	A1	4/2002	Mault et al.
2002/0053637	A1	5/2002	Conn et al.
2002/0062069	A1	5/2002	Mault
2002/0063060	A1	5/2002	Gascoyne et al.
2002/0065453	A1	5/2002	Lesho et al.
2002/0068858	A1	6/2002	Braig et al.
2002/0068860	A1	6/2002	Clark
2002/0072858	A1	6/2002	Cheng
2002/0077765	A1	6/2002	Mault
2002/0077766	A1	6/2002	Mault
2002/0081599	A1	6/2002	Brown et al.
2002/0083461	A1	6/2002	Hutcheson et al.
2002/0087056	A1	7/2002	Aceti et al.
2002/0091312	A1	7/2002	Berner et al.
2002/0099282	A1	7/2002	Knobbe et al.
2002/0099997	A1	7/2002	Piret
2002/0103425	A1	8/2002	Mault
2002/0107433	A1	8/2002	Mault
2002/0107476	A1	8/2002	Mann et al.
2002/0109600	A1	8/2002	Mault et al.
2002/0111547	A1	8/2002	Knobbe et al.
2002/0119711	A1	8/2002	VanAntwerp et al.
2002/0124017	A1	9/2002	Mault
2002/0128594	A1	9/2002	Das et al.
2002/0130042	A1	9/2002	Moerman et al.
2002/0133378	A1	9/2002	Mault et al.
2002/0151796	A1	10/2002	Koulik
2002/0151816	A1	10/2002	Rich et al.
2002/0155615	A1	10/2002	Novikov et al.
2002/0161286	A1	10/2002	Gerber et al.
2002/0161288	A1	10/2002	Shin et al.
2002/0177764	A1	11/2002	Sohrab
2002/0182241	A1	12/2002	Borenstein et al.
2002/0193885	A1	12/2002	Legeay et al.
2002/0198513	A1	12/2002	Lebel et al.
2003/0004457	A1	1/2003	Andersson
2003/0006669	A1	1/2003	Pei et al.
2003/0023171	A1	1/2003	Sato et al.
2003/0023182	A1	1/2003	Mault et al.
2003/0023317	A1	1/2003	Brauker et al.
2003/0028089	A1	2/2003	Galley et al.
2003/0028120	A1	2/2003	Mault et al.
2003/0032077	A1	2/2003	Itoh et al.
2003/0032867	A1	2/2003	Crothall et al.
2003/0032868	A1	2/2003	Graskov et al.
2003/0032874	A1	2/2003	Rhodes et al.
2003/0040683	A1	2/2003	Rule et al.
2003/0042137	A1	3/2003	Mao et al.
2003/0050537	A1	3/2003	Wessel
2003/0050546	A1	3/2003	Desai et al.
2003/0059631	A1	3/2003	Al Larnee et al.
2003/0065254	A1	4/2003	Schulman et al.
2003/0065257	A1	4/2003	Mault et al.
2003/0065273	A1	4/2003	Mault et al.
2003/0065274	A1	4/2003	Mault et al.
2003/0065275	A1	4/2003	Mault et al.
2003/0065308	A1	4/2003	Lebel et al.
2003/0076082	A1	4/2003	Morgan et al.
2003/0078481	A1	4/2003	McIvor et al.
2003/0078560	A1	4/2003	Miller et al.
2003/0097082	A1	5/2003	Purdy et al.
2003/0100040	A1	5/2003	Bonnecaze et al.
2003/0100821	A1	5/2003	Heller et al.
2003/0105407	A1	6/2003	Pearce et al.
2003/0108976	A1	6/2003	Braig et al.
2003/0125612	A1	7/2003	Fox et al.
2003/0125613	A1	7/2003	Enegren et al.
2003/0130616	A1	7/2003	Steil et al.
2003/0134347	A1	7/2003	Heller et al.
2003/0135100	A1	7/2003	Kim et al.
2003/0135333	A1	7/2003	Aceti et al.
2003/0153820	A1	8/2003	Berner et al.
2003/0153821	A1	8/2003	Berner et al.
2003/0158472	A1	8/2003	Sohrab

2003/0158707	A1	8/2003	Doi
2003/0168338	A1	9/2003	Gao et al.
2003/0175806	A1	9/2003	Rule et al.
2003/0176183	A1	9/2003	Drucker et al.
2003/0176933	A1	9/2003	Lebel et al.
2003/0181851	A1	9/2003	Mann et al.
2003/0181852	A1	9/2003	Mann et al.
2003/0187338	A1	10/2003	Say et al.
2003/0187525	A1	10/2003	Mann et al.
2003/0188427	A1	10/2003	Say et al.
2003/0191376	A1	10/2003	Samuels et al.
2003/0191431	A1	10/2003	Mann et al.
2003/0195403	A1	10/2003	Berner et al.
2003/0195462	A1	10/2003	Mann et al.
2003/0199744	A1	10/2003	Buse et al.
2003/0199791	A1	10/2003	Boecker et al.
2003/0199823	A1	10/2003	Bobroff et al.
2003/0199903	A1	10/2003	Boecker et al.
2003/0208110	A1	11/2003	Mault et al.
2003/0208113	A1	11/2003	Mault et al.
2003/0208133	A1	11/2003	Mault
2003/0208409	A1	11/2003	Mault
2003/0211625	A1	11/2003	Cohan
2003/0212346	A1	11/2003	Yuzhakov et al.
2003/0212364	A1	11/2003	Mann et al.
2003/0212379	A1	11/2003	Bylund et al.
2003/0217966	A1	11/2003	Tapsak et al.
2003/0225437	A1	12/2003	Ferguson
2003/0226695	A1	12/2003	Mault
2003/0229514	A2	12/2003	Brown
2003/0232370	A1	12/2003	Trifiro
2003/0235817	A1	12/2003	Bartkowiak et al.
2004/0010207	A1	1/2004	Flaherty et al.
2004/0011671	A1	1/2004	Shults et al.
2004/0015134	A1	1/2004	Lavi et al.
2004/0018486	A1	1/2004	Dunn et al.
2004/0030285	A1	2/2004	Lavi et al.
2004/0030294	A1	2/2004	Mahurkar
2004/0039256	A1	2/2004	Kawatahara et al.
2004/0039406	A1	2/2004	Jessen
2004/0040840	A1	3/2004	Mao et al.
2004/0045879	A1	3/2004	Shults et al.
2004/0054263	A1	3/2004	Moerman et al.
2004/0059201	A1	3/2004	Ginsberg
2004/0068230	A1	4/2004	Estes et al.
2004/0069164	A1	4/2004	Nakamura et al.
2004/0072357	A1	4/2004	Stiene et al.
2004/0073095	A1	4/2004	Causey et al.
2004/0074785	A1	4/2004	Holker et al.
2004/0078219	A1	4/2004	Kaylor et al.
2004/0096959	A1	5/2004	Stiene et al.
2004/0106858	A1	6/2004	Say et al.
2004/0106859	A1	6/2004	Say et al.
2004/0108226	A1	6/2004	Polychronakos et al.
2004/0122353	A1	6/2004	Shahmirian et al.
2004/0122489	A1	6/2004	Mazar et al.
2004/0133164	A1	7/2004	Funderburk et al.
2004/0138588	A1	7/2004	Saikley et al.
2004/0153585	A1	8/2004	Kawatahara et al.
2004/0162473	A1	8/2004	Sohrab
2004/0164961	A1	8/2004	Bal et al.
2004/0167383	A1	8/2004	Kim et al.
2004/0167801	A1	8/2004	Say et al.
2004/0171921	A1	9/2004	Say et al.
2004/0172284	A1	9/2004	Sullivan et al.
2004/0176913	A1	9/2004	Kawatahara et al.
2004/0186362	A1	9/2004	Brauker et al.
2004/0186365	A1	9/2004	Jin et al.
2004/0193025	A1	9/2004	Steil et al.
2004/0193090	A1	9/2004	Lebel et al.
2004/0199059	A1	10/2004	Brauker et al.
2004/0202576	A1	10/2004	Aceti et al.
2004/0219664	A1	11/2004	Heller et al.
2004/0225338	A1	11/2004	Lebel et al.
2004/0236200	A1	11/2004	Say et al.
2004/0236251	A1	11/2004	Roe et al.
2004/0248204	A1	12/2004	Moerman
2004/0249250	A1	12/2004	McGee et al.
2004/0249253	A1	12/2004	Racchini et al.
2004/0249254	A1	12/2004	Racchini et al.
2004/0249999	A1	12/2004	Connolly et al.
2004/0253736	A1	12/2004	Stout et al.
2004/0254429	A1	12/2004	Yang
2004/0254433	A1	12/2004	Bandis et al.
2004/0254434	A1	12/2004	Goodnow et al.
2004/0260363	A1	12/2004	Arx et al.
2004/0263354	A1	12/2004	Mann et al.
2005/0003470	A1	1/2005	Nelson et al.
2005/0010087	A1	1/2005	Banet et al.
2005/0010269	A1	1/2005	Lebel et al.
2005/0027177	A1	2/2005	Shin et al.
2005/0027179	A1	2/2005	Berner et al.
2005/0027180	A1	2/2005	Goode et al.
2005/0027181	A1	2/2005	Goode et al.
2005/0027462	A1	2/2005	Goode et al.
2005/0027463	A1	2/2005	Goode et al.
2005/0031689	A1	2/2005	Shults et al.
2005/0033132	A1	2/2005	Shults et al.
2005/0038680	A1	2/2005	McMahon
2005/0043598	A1	2/2005	Goode et al.
2005/0043894	A1	2/2005	Fernandez
2005/0049473	A1	3/2005	Desai et al.
2005/0051427	A1	3/2005	Brauker et al.
2005/0051440	A1	3/2005	Simpson et al.
2005/0054909	A1	3/2005	Petisce et al.
2005/0056552	A1	3/2005	Simpson et al.
2005/0090607	A1	4/2005	Tapsak et al.
2005/0112169	A1	5/2005	Brauker et al.
2005/0113657	A1	5/2005	Alarcon et al.
2005/0113658	A1	5/2005	Jacobson et al.
2005/0118726	A1	6/2005	Schultz et al.
2005/0121322	A1	6/2005	Say et al.
2005/0124873	A1	6/2005	Shults et al.
2005/0131346	A1	6/2005	Douglas
2005/0137471	A1	6/2005	Haar et al.
2005/0143635	A1	6/2005	Kamath et al.
2005/0143636	A1	6/2005	Zhang et al.
2005/0148003	A1	7/2005	Keith et al.
2005/0154271	A1	7/2005	Rasdal et al.
2005/0161346	A1	7/2005	Simpson et al.
2005/0171503	A1	8/2005	Van Den Berghe et al.
2005/0171513	A1	8/2005	Mann et al.
2005/0173245	A1	8/2005	Feldman et al.
2005/0176136	A1	8/2005	Burd et al.
2005/0177036	A1	8/2005	Shults et al.
2005/0181012	A1	8/2005	Saint et al.
2005/0182306	A1	8/2005	Sloan
2005/0182451	A1	8/2005	Griffin et al.
2005/0187720	A1	8/2005	Good et al.
2005/0192557	A1	9/2005	Brauker et al.
2005/0195930	A1	9/2005	Spital et al.
2005/0199494	A1	9/2005	Say et al.
2005/0203360	A1	9/2005	Brauker et al.
2005/0203707	A1	9/2005	Tsutsui et al.
2005/0214892	A1	9/2005	Kovatchev et al.
2005/0215871	A1	9/2005	Feldman et al.
2005/0215872	A1	9/2005	Berner et al.
2005/0239154	A1	10/2005	Feldman et al.
2005/0239156	A1	10/2005	Drucker et al.
2005/0242479	A1	11/2005	Petisce et al.
2005/0245795	A1	11/2005	Goode et al.
2005/0245799	A1	11/2005	Brauker et al.

2005/0251083	A1	11/2005	Carr Brendel et al.
2005/0261563	A1	11/2005	Zhou et al.
2005/0261600	A1	11/2005	Choi
2005/0267780	A1	12/2005	Ray et al.
2005/0271546	A1	12/2005	Gerber et al.
2005/0271547	A1	12/2005	Gerber et al.
2005/0272640	A1	12/2005	Doyle et al.
2005/0272984	A1	12/2005	Kotulla et al.
2005/0277164	A1	12/2005	Drucker et al.
2005/0287620	A1	12/2005	Heller et al.
2006/0001538	A1	1/2006	Kraft et al.
2006/0001550	A1	1/2006	Mann et al.
2006/0001551	A1	1/2006	Kraft et al.
2006/0003398	A1	1/2006	Heller et al.
2006/0004271	A1	1/2006	Peyser et al.
2006/0007017	A1	1/2006	Mann et al.
2006/0015020	A1	1/2006	Neale et al.
2006/0015024	A1	1/2006	Brister et al.
2006/0016700	A1	1/2006	Brister et al.
2006/0019327	A1	1/2006	Brister et al.
2006/0020186	A1	1/2006	Brister et al.
2006/0020187	A1	1/2006	Brister et al.
2006/0020188	A1	1/2006	Kamath et al.
2006/0020189	A1	1/2006	Brister et al.
2006/0020190	A1	1/2006	Kamath et al.
2006/0020191	A1	1/2006	Brister e al.
2006/0020192	A1	1/2006	Brister et al.
2006/0025663	A1	2/2006	Talbot et al.
2006/0031094	A1	2/2006	Cohen et al.
2006/0036139	A1	2/2006	Brister et al.
2006/0036140	A1	2/2006	Brister et al.
2006/0036141	A1	2/2006	Kamath et al.
2006/0036142	A1	2/2006	Brister et al.
2006/0036143	A1	2/2006	Brister et al.
2006/0036144	A1	2/2006	Brister et al.
2006/0036145	A1	2/2006	Brister et al.
2006/0036187	A1	2/2006	Vos et al.
2006/0040402	A1	2/2006	Brauker et al.
2006/0052679	A1	3/2006	Kotulla et al.
2006/0058602	A1	3/2006	Kwiatkowski et al.
2006/0063218	A1	3/2006	Bartkowiak et al.
2006/0068208	A1	3/2006	Tapsak et al.
2006/0074564	A1	4/2006	Bartkowiak et al.
2006/0086624	A1	4/2006	Tapsak et al.
2006/0155180	A1	7/2006	Brister et al.
2006/0173444	A1	8/2006	Choy et al.
2006/0189856	A1	8/2006	Petisce et al.
2006/0189863	A1	8/2006	Peyser et al.
2006/0195029	A1	8/2006	Shults et al.
2006/0198864	A1	9/2006	Shults et al.
2006/0200019	A1	9/2006	Petisce et al.
2006/0200020	A1	9/2006	Brister et al.
2006/0200022	A1	9/2006	Brauker et al.
2006/0211921	A1	9/2006	Brauker et al.
2006/0222566	A1	10/2006	Brauker et al.
2006/0224108	A1	10/2006	Brauker et al.
2006/0235285	A1	10/2006	Brister et al.
2006/0247985	A1	11/2006	Liamos et al.
2006/0248761	A1	11/2006	Boock et al.
2006/0258929	A1	11/2006	Goode et al.
2006/0270922	A1	11/2006	Brauker et al.
2006/0270923	A1	11/2006	Brauker et al.
2007/0016381	A1	1/2007	Kamath et al.
2007/0017805	A1	1/2007	Hodges et al.
2007/0027381	A1	2/2007	Stafford
2007/0027384	A1	2/2007	Brister et al.
2007/0027385	A1	2/2007	Brister et al.
2007/0032706	A1	2/2007	Kamath et al.
2007/0032717	A1	2/2007	Brister et al.
2007/0032718	A1	2/2007	Shults et al.
2007/0045902	A1	3/2007	Brauker et al.
2007/0060814	A1	3/2007	Stafford
2007/0066873	A1	3/2007	Kamath et al.
2007/0078320	A1	4/2007	Stafford
2007/0078321	A1	4/2007	Mazza et al.
2007/0093704	A1	4/2007	Brister et al.
2007/0106135	A1	5/2007	Sloan et al.
2007/0142776	A9	6/2007	Kovelman et al.
2007/0149873	A1	6/2007	Say et al.
2007/0149874	A1	6/2007	Say et al.
2007/0151869	A1	7/2007	Heller et al.
2007/0156094	A1	7/2007	Safabash et al.
2007/0161879	A1	7/2007	Say et al.
2007/0161880	A1	7/2007	Say et al.
2007/0163880	A1	7/2007	Woo et al.
2007/0179370	A1	8/2007	Say et al.
2007/0179372	A1	8/2007	Say et al.
2007/0191699	A1	8/2007	Say et al.
2007/0191700	A1	8/2007	Say et al.
2007/0197889	A1	8/2007	Brister et al.
2007/0197890	A1	8/2007	Boock et al.
2007/0203408	A1	8/2007	Say et al.
2007/0203410	A1	8/2007	Say et al.
2007/0203411	A1	8/2007	Say et al.
2007/0203966	A1	8/2007	Brauker et al.
2007/0208244	A1	9/2007	Brauker et al.
2007/0208245	A1	9/2007	Brauker et al.
2007/0208246	A1	9/2007	Brauker et al.
2007/0208247	A1	9/2007	Say et al.
2007/0213610	A1	9/2007	Say et al.
2007/0215491	A1	9/2007	Heller et al.
2007/0218097	A1	9/2007	Heller et al.
2007/0235331	A1	10/2007	Simpson et al.
2007/0244380	A1	10/2007	Say et al.
2007/0249919	A1	10/2007	Say et al.
2007/0249920	A1	10/2007	Say et al.
2007/0249922	A1	10/2007	Peyser et al.
2008/0045992	A1	2/2008	Schiraga
2008/0064944	A1	3/2008	VanAntwerp et al.
2008/0167543	A1	7/2008	Say et al.
2008/0214914	A1	9/2008	Say et al.

FOREIGN PATENT DOCUMENTS

EP	0010375	4/1980
EP	0026995	4/1981
EP	0048090	3/1982
EP	0078636	5/1983
EP	0080304	6/1983
EP	0096288	12/1983
EP	0098592	1/1984
EP	0 098 592	1/1984
EP	0107634	5/1984
EP	0125139	11/1984
EP	0127958	12/1984
EP	0136362	4/1985
EP	0170375	2/1986
EP	0177743	4/1986
EP	0184909	6/1986
EP	0206218	12/1986
EP	0230472	8/1987
EP	0241309	10/1987
EP	0245073	11/1987
EP	0255291	2/1988
EP	0286118	10/1988
EP	0320109	6/1989
EP	0278647	9/1989
EP	0353328	2/1990
EP	0359831	3/1990
EP	0368209	5/1990
EP	0368290	5/1990
EP	0390390	10/1990
EP	0 390 390	10/1990

EP	0396788	11/1990
EP	0400918	12/1990
EP	429076	5/1991
EP	0453283	10/1991
EP	471986	2/1992
EP	497308	8/1992
EP	502504	9/1992
EP	0512122	11/1992
EP	0535898	4/1993
EP	537761	4/1993
EP	0539625	5/1993
EP	560336	9/1993
EP	0561966	9/1993
EP	590661	4/1994
EP	636879	2/1995
EP	636880	2/1995
EP	679720	11/1995
EP	685737	12/1995
EP	689051	12/1995
EP	730037	9/1996
EP	732406	9/1996
EP	735363	10/1996
EP	744781	11/1996
EP	526173 B1	5/1997
EP	0776628	6/1997
EP	794429	9/1997
EP	795601	9/1997
EP	795748	9/1997
EP	797264	9/1997
EP	800080	10/1997
EP	0800082	10/1997
EP	805352	11/1997
EP	0817809	1/1998
EP	823483	2/1998
EP	0838230	4/1998
EP	845673	6/1998
EP	851224	7/1998
EP	856586	8/1998
EP	868144	10/1998
EP	872728	10/1998
EP	0880936	12/1998
EP	884392	12/1998
EP	0885932	12/1998
EP	894869	2/1999
EP	897745	2/1999
EP	901018	3/1999
EP	902270	3/1999
EP	905506	3/1999
EP	909952	4/1999
EP	918045	5/1999
EP	923903	6/1999
EP	955546	11/1999
EP	957361	11/1999
EP	957362	11/1999
EP	964059	12/1999
EP	964060	12/1999
EP	964245	12/1999
EP	965301	12/1999
EP	0967788	12/1999
EP	969097	1/2000
EP	0970655	1/2000
EP	984069	3/2000
EP	987544	3/2000
EP	988828	3/2000
EP	992589	4/2000
EP	995803	4/2000
EP	1013219	6/2000
EP	1024358	8/2000
EP	1034734	9/2000
EP	1048264	11/2000
EP	1075209	2/2001
EP	1077634	2/2001
EP	1078258	2/2001
EP	1300670	4/2003
EP	1352969	10/2003
EP	1362920	11/2003
EP	1362921	11/2003
EP	1398621	3/2004
EP	1579690	9/2005
EP	1598656	11/2005
EP	1845165	10/2007
GB	1394171	5/1975
GB	1442303	7/1976
GB	1579690	11/1980
GB	1599241	9/1981
GB	2073891	10/1981
GB	2149918	6/1985
GB	2154003	8/1985
GB	2194892	3/1988
GB	2204408	11/1988
GB	2225637	9/1990
GB	2254436	10/1992
JP	54041191	4/1979
JP	2002189015	7/2002
WO	WO86000513	1/1986
WO	WO8700513	1/1987
WO	WO8706040	10/1987
WO	WO8902246	3/1989
WO	WO8905119	6/1989
WO	WO8908713	9/1989
WO	WO9000367	1/1990
WO	WO9000738	1/1990
WO	WO9005300	5/1990
WO	WO9005910	5/1990
WO	WO9013021	11/1990
WO	WO9101680	2/1991
WO	WO9109302	6/1991
WO	WO9115993	10/1991
WO	WO9116416	10/1991
WO	WO9204153	3/1992
WO	WO9207525	5/1992
WO	WO9210584	6/1992
WO	WO9213271	8/1992
WO	WO9305703	4/1993
WO	WO9314693	8/1993
WO	WO9319701	10/1993
WO	WO9420602	9/1994
WO	WO9422357	10/1994
WO	WO9422367	10/1994
WO	WO9427140	11/1994
WO	WO9506240	3/1995
WO	WO9507109	3/1995
WO	WO9601611	1/1996
WO	WO9607908	3/1996
WO	WO-96/14026	5/1996
WO	WO9614026	5/1996
WO	WO9625089	8/1996
WO	WO-96/25089	8/1996
WO	WO9630431	10/1996
WO	WO9632076	10/1996
WO	WO9635370	11/1996
WO	WO9636296	11/1996
WO	WO9701986	1/1997
WO	WO-97/01986	1/1997
WO	WO9719344	5/1997
WO	WO9720207	6/1997
WO	WO9733513 A1	9/1997
WO	WO9741421	11/1997
WO	WO9742882	11/1997
WO	WO9742883	11/1997
WO	WO9742886	11/1997
WO	WO9742888	11/1997

WO	WO9743633	11/1997
WO	WO9743962	11/1997
WO	WO9746868	12/1997
WO	WO9809167	3/1998
WO	WO9810699	3/1998
WO	WO9824358	6/1998
WO	WO9824366	6/1998
WO	WO9838906	9/1998
WO	WO9846124	10/1998
WO	WO9852045	11/1998
WO	WO9852293	11/1998
WO	WO9905966	2/1999
WO	WO9913574	3/1999
WO	WO9932883	7/1999
WO	WO9948419	9/1999
WO	WO9956613	11/1999
WO	WO9958051	11/1999
WO	WO9958973	11/1999
WO	WO0013003	3/2000
WO	WO0013580	3/2000
WO	WO0018294	4/2000
WO	WO0019887	4/2000
WO	WO0020626	4/2000
WO	WO0032098	6/2000
WO	WO0033065	6/2000
WO	WO0049940	8/2000
WO	WO0059370	10/2000
WO	WO0059373	10/2000
WO	WO0062664	10/2000
WO	WO0062665	10/2000
WO	WO0078210	12/2000
WO	WO0078992	12/2000
WO	WO0112158	2/2001
WO	WO0120019	3/2001
WO	WO0120334	3/2001
WO	WO0124038	4/2001
WO	WO0133216	5/2001
WO	WO0143660	6/2001
WO	WO0152727	7/2001
WO	WO0152935	7/2001
WO	WO0154753	8/2001
WO	WO0157238	8/2001
WO	WO0157239	8/2001
WO	WO0158348	8/2001
WO	WO0168901	9/2001
WO	WO0169222	9/2001
WO	WO0188524	11/2001
WO	WO0188534	11/2001
WO	WO0216905	2/2002
WO	WO0217210	2/2002
WO	WO0224065	3/2002
WO	WO02058537	8/2002
WO	WO02078512	10/2002
WO	WO02082989	10/2002
WO	WO03072269	9/2003
WO	WO03076893	9/2003
WO	WO03082091	10/2003
WO	WO03101862	12/2003
WO	WO2004061420	7/2004
WO	WO2005089103	9/2005
WO	WO2006119084	11/2006
WO	WO2007002189	1/2007
WO	WO2007016399	2/2007
WO	WO2007027381	3/2007
WO	WO2007027788	3/2007
WO	WO2007051139	5/2007
WO	WO2007053832	5/2007
WO	WO2007056638	5/2007
WO	WO2007120363	10/2007

OTHER PUBLICATIONS

Armour et al., Diabetes (1990) 39:1519–1526.

Belluci et al., Journal of Applied Electrochemistry (1986) 16(1):15–21.

Ko et al., (ed.), Chapter 15 in "Implantable Sensors for Closed–Loop Prosthetic Systems" Mount Kisco, NY: Futura Publishing Company, Inc. (1985) pp. 197–210.

McKean et al., IEEE Transactions On Biomedical Engineering (1988) 35(7):526–532.

Shichiri et al., Diabetes Care (1986) 9(3):298–301.

Shults et al., IEEE Transactions On Biomedical Engineering (1994) 41(10):937–942.

Thompson et al., Clinical Biochemistry (1986) 19:255–261.

Updike et al., Chapter 4 in "Biosensors in the Body: Continuous in vivo Monitoring" John Wiley & Sons Ltd. (1997) pp. 117–137.

Velho et al., Biomed. Biochim. Acta (1989) 48(11/12):957–964.

Abel, P. U., et al., "Biosensors for In Vivo Glucose Measurement: Can We Cross the Experimental Stage", Biosensors and Bioelectronics, vol. 17, 2002, pp. 1059–1070.

Abruna, H. D., et al., "Rectifying Interfaces Using Two–Layer Films of Electrochemically Polymerized Vinylpyridine and Vinylbipyridine Complexes of Ruthenium and Iron on Electrodes", Journal of the American Chemical Society, vol. 103, No. 1, 1981, pp. 1–5.

Advisory Action for U.S. Appl. No. 11/109,379, filed Apr. 19, 2005, mailed Apr. 24, 2008.

Advisory Action, U.S. Patent Reexamination U.S. Appl. No. 90/007,910 of U.S. Patent No. 6,175,752, U.S. Patent & Trademark Office, Alexandria, VA, Dated Feb. 6, 2009.

Albery, W. J., et al., "Amperometric Enzyme Electrodes Part II: Conducting Salts as Electrode Materials for the Oxidation of Glucose Oxidase", Journal of ElectroAnalytical Chemistry, vol. 194, 1985, pp. 223–235.

Albery, W. J., et al., "Amperometric Enzyme Electrodes", Philosophical Transactions of The Royal Society of London, vol. 316, 1987, pp. 107–119.

Alcock, S. J., et al., "Continuous Analyte Monitoring to Aid Clinical Practice", IEEE Engineering in Medicine and Biology Magazine, 1994, pp. 319–325.

American Heritage Dictionary, 4th ed., Houghton Mifflin Company, 2000, p. 782.

Anderson, L. B., et al., "Thin–Layer Electrochemistry: Steady–State Methods of Studying Rate Processes", Journal of ElectroAnalytical Chemistry, vol. 10, 1965, pp. 295–305.

Armour, et al., 1990, "Application Of Chronic Intravascular Blood Glucose Sensor In Dogs," Diabetes, vol. 39: p. 1519–1526.

Asberg, P., et al., "Hydrogels of a Conducting Conjugated Polymer as 3–D Enzyme Electrode", Biosensors & Bioelectronics, vol. 19, 2003, pp. 199–207.

Atanasov, P., et al., "Biosensor for Continuous Glucose Monitoring", Biotechnology and Bioengineering, vol. 43, 1994, pp. 262–266.

Atanasov, P., et al., "Implantation of a Refillable Glucose Monitoring–Telemetry Device", Biosensors & Bioelectronics, vol. 12, No. 7, 1997, pp. 669–680.

Aussedat et al., "A User–Friendly Method for Calibrating a Subcutaneous Glucose Sensor–Based Hypoglycaeemic Alarm," Biosensors & Bioelectronics, vol. 12, No. 11, pp. 1061–1071 (1997).

Aussedat, B., et al., "A User–Friendly Method for Calibrating a Subcutaneous Glucose Sensor–Based Hypoglycaemic Alarm"Biosensors & Bioelectronics, vol. 12, No. 11, 1997 pp. 1061–1071.

Baker, D. A., et al., "Dynamic Concentration Challenges for Biosensor Characterization", Biosensors & Bioelectronics, vol. 8, 1993, pp. 433–441.

Baker, D. A., et al., "Dynamic Delay and Maximal Dynamic Error in Continuous Biosensors", Analytical Chemistry, vol. 68, No. 8, 1996, pp. 1292–1297.

Bani Amer, M. M., "An Accurate Amperometric Glucose Sensor Based Glucometer with Eliminated Cross–Sensitivity", Journal of Medical Engineering & Technology, vol. 26, No. 5, 2002, pp. 208–213.

Bard, A. J., et al., Electrochemical Methods, 1980, pp. 173–175.

Bartlett, P. N., et al., "Covalent Binding of Electron Relays to Glucose Oxidase", Journal of the Chemical Society, Chemical Communications, 1987, pp. 1603–1604.

Bartlett, P. N., et al., "Modification of Glucose Oxidase by Tetrathiafulvalene", Journal of the Chemical Society, Chemical Communications, 1990, pp. 1135–1136.

Bartlett, P. N., et al., "Strategies for the Development of Amperometric Enzyme Electrodes", Biosensors, vol. 3, 1987/88, pp. 359–379.

Beach, R. D., et al., "Subminiature Implantable Potentiostat and Modified Commercial Telemetry Device for Remote Glucose Monitoring", IEEE Transactions on Instrumentation and Measurement, vol. 28, No. 6, 1999, pp. 1239–1245.

Beech, W. A., "AX.25 Link Access Protocol for Amateur packet Radio", Tucson Amateur Packet Radio Corporation, 1998, pp. 1–133.

Bellucci et al., "Electrochemical behaviour of graphite–epoxy composite materials (GECM) in aqueous sale solutions," Journal of Applied Electrochemistry, 16 (1986) 15–22.

Bennion, N., et al., "Alternate Site Glucose Testing: A Crossover Design", Diabetes Technology & Therapeutics, vol. 4, No. 1, 2002, pp. 25–33.

Bindra, D. S., et al., "Design and in Vitro Studies of a Needle–Type Glucose Sensor for Subcutaneous Monitoring", Analytical Chemistry, vol. 63, No. 17, 1991, pp. 1692–1696.

Bindra, D. S., et al., "Pulsed Amperometric Detection of Glucose in Biological Fluids at a Surface–Modified Gold Electrode", Analytical Chemistry, vol. 61, No. 22, 1989, pp. 2566–2570.

Bisenberger, M., et al., "A Triple–Step Potential Waveform at Enzyme Multisensors with Thick–Film Gold Electrodes for Detection of Glucose and Sucrose", Sensors and Actuators B, vol. 28, 1995, pp. 181–189.

Bland, J. M., et al., "A Note on the Use of the Intraclass Correlation Coefficient in the Evaluation of Agreement Between Two Methods of Measurement", Computers in Biology and Medicine, vol. 20, No. 5, 1990, pp. 337–340.

Bland, J. M., et al., "Statistical Methods for Assessing Agreement Between Two Methods of Clinical Measurement", The Laucet, 1986, pp. 307–310.

Blank, T. B., et al., "Clinical Results From a Non–Invasive Blood Glucose Monitor", Optical Diagnostics and Sensing of Biological Fluids and Glucose and Cholesterol Monitoring II, Proceedings of SPIE, vol. 4624, 2002, pp. 1–10.

Bobbioni–Harsch, E., et al., "Lifespan of Subcutaneous Glucose Sensors and Their Performances During Dynamic Glycaemia Changes in Rats", Journal of Biomedical Engineering, vol. 15, 1993, pp. 457–463.

Bode, B. W., "Clinical Utility of the Continuous Glucose Monitoring System", Diabetes Technology & Therapeutics, vol. 2, Sup. 1, 2000, pp. S35–S41.

Bode, B. W., et al., "Continuous Glucose Monitoring Used to Adjust Diabetes Therapy Improves Glycosylated Hemoglobin: A Pilot Study", Diabetes Research and Clinical Practice, vol. 46, 1999, pp. 183–190.

Bode, B. W., et al., "Using the Continuous Glucose Monitoring System to Improve the Management of Type I Diabetes", Diabetes Technology & Therapeutics, vol. 2, Sup. 1, 2000, pp. S43–S48.

Boedeker Plastics, Inc., "Polyethylene Specifications", Web Page of Boedeker.com, 2007, pp. 1–3.

Bolinder, J., et al., "Microdialysis Measurement of the Absolute Glucose Concentration in Subcutaneous Adipose Tissue Allowing Glucose Monitoring in Diabetic Patients", Diabetologia, vol. 35, 1992, pp. 1177–1180.

Bolinder, J., et al., "Self–Monitoring of Blood Glucose in Type I Diabetic Patients: Comparison with Continuous Microdialysis Measurements of Glucose in Subcutaneous Adipose Tissue During Ordinary Life Conditions", Diabetes Care, vol. 20, No. 1, 1997, pp. 64–70.

Bott, A. W., "A Comparison of Cyclic Voltammetry and Cyclic Staircase Voltammetry", Current Separations, vol. 16, No. 1, 1997, pp. 23–26.

Bott, A. W., "Electrochemical Methods for the Determination of Glucose", Current Separations, vol. 17, No. 1, 1998, pp. 25–31.

Bowman, L., et al., "The Packaging of Implantable Integrated Sensors", IEEE Transactions on Biomedical Engineering, vol. 33, No. 2, 1986, pp. 248–225.

Brandt, J., et al., "Covalent Attachment of Proteins to Polysaccharide Carriers by Means of Benzoquinone", Biochimica et Biophysica Acta, vol. 386, 1975, pp. 196–202.

Brauker et al., "Local Inflammatory Response Around Diffusion Chambers Containing Xenografts", Transplanation, vol. 61, 1671–1677, No. 12, Jun. 27, 1996.

Brauker et al., "Neovascularization of Synthetic Membranes Directed by Membrane Microarchitecture," Journal of Biomedical Materials Research 29:1517 (1995).

Brauker, et al. Jun. 27, 1996. Local Inflammatory Response Around Diffusion Chambers Containing Xenografts Transplantation 61(12):1671–1677.

Brauker, et al. Neovascularization of synthetic membranes directed by membrane microarchitecture. J Biomed Mater Res 1995, 29, 1517–1524.

Brauker, J., et al., "Sustained Expression of High Levels of Human Factor IX from Human Cells Implanted Within an Immunoisolation Device into Athymic Rodents", Human Gene Therapy, vol. 9, No. 6, 1998, pp. 879–888.

Brauker, J.H. Unraveling Mysteries at the Biointerface: Molecular Mediator of Inhibition of Blood Vessel Formation in the Foreign Body Capsule Revealed. Surfacts Biomaterials 2001,6, 1;5.

Bremer, T. M., et al., "Benchmark Data from the Literature for Evaluation of New Glucose Sensing Technologies", Diabetes Technology & Therapeutics, vol. 3, No. 3, 2001, pp. 409–418.

Bremer, T., et al., "Is Blood Glucose Predictable from Previous Values?", Diabetes, vol. 48, 1999, pp. 445–451.

Brooks et al., "Development of an On–line Glucose Sensor for Fermentation Monitoring," Biosensors 3 (1987/88) 45–56.

Brownlee, M., et al., "A Glucose–Controlled Insulin–Delivery System: Semisynthetic Insulin Bound to Lectin", Science, vol. 206, 1979, 1190–1191.

Brunner, et al. Validation of home blood glucose meters with respect to cliniical and analytical approaches. Diabetes Care 1998, 21, 585–590.

Cai, Q., et al., "A Wireless, Remove Query Glucose Biosensor Based on a pH–Sensitive Polymer", Analytical Chemistry, vol. 76, No. 14, 2004, pp. 4038–4043.

Cass, A. E., et al., "Ferricinum Ion As An Electron Acceptor for Oxido–Reductases", Journal of ElectroAnalytical Chemistry, vol. 190, 1985, pp. 117–127.

Cass, A. E., et al., "Ferrocene–Medicated Enzyme Electrode for Amperometric Determination of Glucose", Analytical Chemistry, vol. 56, No. 4, 1984, 667–671.

Castner, J. F., et al., "Mass Transport and Reaction Kinetic Parameters Determined Electrochemically for Immobilized Glucose Oxidase", Biochemistry, vol. 23 No. 10, 1984, 2203–2210.

Chen, J. C., et al., "A Comparison of MAC Protocols for Wireless Local Networks Based on battery Power Consumption", IEEE, 1998, pp. 150–157.

Chen, T., et al., "Defining the Period of Recovery of the Glucose Concentration After Its Local Perturbation by the Implantation of a Miniature Sensor", Clinical Chemistry and Laboratory Medicine, vol. 40, No. 8, 2002, pp. 486–489.

Chia, C. W., et al., "Glucose Sensors: Toward Closed Loop Insulin Delivery", Endocrinology and Metabolism Clinics of North America, vol. 33, 2004, pp. 175–195.

Choleau, C., et al., "Calibration of a Subcutaneous Amperometric Glucose Sensor Implanted for 7 Days in Diabetic Patients Part 2: Superiority of the One–Point Calibration Method", Biosensors and Bioelectronics, vol. 17, 2002, pp. 647–654.

Choleau, C., et al., "Calibration of a Subcutaneous Amperometric Glucose Sensor Part 1: Effect of Measurement Uncertainties on the Determination of Sensor Sensitivity and Background Current", Biosensors and Bioelectronics, vol. 17, 2002, pp. 641–646.

Claremont, D. J., et al., "Biosensors for Continuous In Vivo Glucose Monitoring", Proceedings of the Annual International Conference of the IEEE Engineering in Medicine and Biology Society, vol. 10, 1988.

Clark Jr., L. C., et al., "Differential Anodic Enzyme Polarography for the Measurement of Glucose", Oxygen Transport to Tissue: Instrumentation, Methods, and Physiology, 1973, pp. 127–133.

Clark Jr., L. C., et al., "Electrode Systems for Continuous Monitoring in Cardiovascular Surgery", Annals New York Academy of Sciences, 1962, pp. 29–45.

Clark Jr., L. C., et al., "Long–term Stability of Electroenzymatic Glucose Sensors Implanted in Mice", American Society of Artificial Internal Organs Transactions, vol. XXXIV, 1988, pp. 259–265.

Clark, W. L., et al., "Evaluating Clinical Accuracy of Systems for Self–Monitoring of Blood Glucose", Diabetes Care, vol. 10, No. 5, 1987, pp. 622–628.

Cox, D. J., et al., "Accuracy of Perceiving Blood Glucose in IDDM", Diabetes Care, vol. 8, No. 6, 1985, pp. 529–536.

Csoregi, E., et al., "Amperometric Microbiosensors for Detection of Hydrogen Peroxide and Glucose Based on Peroxidase–Modified Carbon Fibers", Electroanalysis, vol. 6, 1994, pp. 925–933.

Csoregi, E., et al., "Design and Optimization of a Selective Subcutaneously Implantable Glucose Electrode Based on 'Wired' Glucose Oxidase", Analytical Chemistry, vol. 67, No. 7, 1995, pp. 1240–1244.

Csoregi, E., et al., "Design, Characterization, and One–Point in Vivo Calibration of a Subcutaneously Implanted Glucose Electrode", Analytical Chemistry, vol. 66 No. 19, 1994, pp. 3131–3138.

Csoregi, E., et al., "On–Line Glucose Monitoring by Using Microdialysis Sampling and Amperometric Detection Based on 'Wired' Glucose Oxidase in Carbon Paste", Mikrochimica Acta, vol. 121, 1995, pp. 31–40.

D Young & Co. Correspondence for European Patent Application No. 99903239.4, Replacement Claims, dated Nov. 22, 2000.

Dai et al., "Hydrogel Membranes with Mesh Size Asymmtery Based on the Gradient Crosslinking of Poly(vinyl alcohol)," Journal of Membrane Science, 156 (1999) 67–79.

D'Arrigo, G., et al., "Porous–Si Based Bio Reactors for Glucose Monitoring and Drugs Production", Proceedings of SPIE: Microfluids, BioMEMS, and Medical Microsystems, vol. 4982, 2003, pp. 178–184.

Davies et al., "Polymer membranes in clinical sensor applications, I. An overview of membrane function," Biomaterials 1992, vol. 13, No. 14, 971–978.

Davis, G., "Electrochemical Techniques for the Development of Amperometric Biosensor", Biosensors, vol. 1, 1985, pp. 161–178.

Degani, Y., et al., "Direct Electrical Communication Between Chemically Modified Enzymes and Metal Electrodes. 1. Electron Transfer from Glucose Oxidase to Metal Electrodes via Electron Relays, Bound Covalently to the Enzyme", The Journal of Physical Chemistry, vol. 91, No. 6, 1987, pp. 1285–1289.

Degani, Y., et al., "Direct Electrical Communication Between Chemically Modified Enzymes and Metal Electrodes. 2. Methods for Bonding Electron–Transfer Relays to Glucose Oxidase and D–Amino–Acid Oxidase", Journal of the American Chemical Society, vol. 110, No. 8, 1988, pp. 2615–2620.

Degani, Y., et al., "Electrical Communication Between Redox Centers of Glucose Oxidase and Electrodes via Electrostatically and Covalently Bound Redox Polymers", Journal of the American Chemical Society, vol. 111, 1989, pp. 2357–2358.

Denisevich, P., et al., "Unidirectional Current Flow and Charge State Trapping at Redox Polymer Interfaces on Bilayer Electrodes: Principles, Experimental Demonstration, and Theory", Journal of the American Chemical Society, vol. 103, 1981, pp. 4727–4737.

Diabetes Research in Children Network (DirecNet) Study Group. "Accuracy of the Gluco Watch G2 Biographer and the continuous glucose monitoring system during hypoglycemia: experience of the Diabetes Research in Children Network," Diabetes Care. 2004 Mar;27(3):722–6.

Dicks, J. M., et al., "Ferrocene Modified Polypyrrole with Immobilised Glucose Oxidase and its Application in Amperometric Glucose Microbiosensors", Annales de Biologie Clinique, vol. 47, 1989, pp. 607–619.

Direct 30/30.RTM. meter (Markwell Medical) (Catalog).

Dixon, B. M., et al., "Characterization In Vitro and In Vivo of the Oxygen Dependence of an Enzyme/Polymer Biosensors for Monitoring Brain Glucose", Journal of Neuroscience Methods, vol. 119, 2002, pp. 135–142.

Ellis, C. D., et al., "Selectivity and Directed Charge Transfer through an Electroactive Metallopolymer Film", Journal of the American Chemical Society, vol. 103, No. 25, 1981, pp. 7480–7483.

El–Sa'Ad, L., et al., "Moisture Absorption by Epoxy Resins: The Reverse Thermal Effect", Journal of Materials Science, vol. 25, No. 8, 1990, pp. 3577–3582.

Engstrom, R. C., "Electrochemical Pretreatment of Glassy Carbon Electrodes", Analytical Chemistry, vol. 54, No. 13, 1982, pp. 2310–2314.

Engstrom, R. C., et al., "Characterization of Electrochemically Pretreated Glassy Carbon Electrodes", Analytical Chemistry, vol. 56, No. 2, 1984, pp. 136–141.

Ernst, H., et al., "Reliable Glucose Monitoring Through the Use of Microsystem Technology", Analytical and Bioanalytical Chemistry, vol. 373, 2002, pp. 758–761.

Fare, T. L., et al., "Functional Characterization of a Conducting Polymer–Based Immunoassay System", Biosensors & Bioelectronics, vol. 13, No. 3–4, 1998, pp. 459–470.

Feldman, B. et al., "A Continuous Glucose Sensor Based on Wired EnzymeTM Technology—Results from a 3–Day Trial in Patients with Type 1 Diabetes", Diabetes Technology & Therapeutics, vol. 5, No. 5, 2003, pp. 769–779.

Feldman, B., et al., "Correlation of Glucose Concentrations in Interstitial Fluid and Venous Blood During Periods of Rapid Glucose Change", Abbott Diabetes Care, Inc. Freestyle Navigator Continuous Glucose Monitor Pamphlet.

Feldman, B., et al., "Electron Transfer Kinetics at Redox Polymer/Solution Interfaces Using Microelectrodes and Twin Electrode Thin Layer Cells", Journal of ElectroAnalytical Chemistry, vol. 194, 1985, pp. 63–81.

Fischer, H., et al., "Intramolecular Electron Transfer Medicated by 4,4'–Bypyridine and Related Bridging Groups", Journal of the American Chemical Society, vol. 98, No. 18, 1976, pp. 5512–5517.

Flentge F. et al., "An Enzyme–Reactor for Electrochemical Monitoring of Choline and Acetylcholine: Applications in High–Performance Liquid Chromatography, Brain Tissue, Microdialysis and Cerebrospinal Fluid", Analytical Biochemistry, vol. 204, No. 2, pp. 305–310, (Aug. 1, 1992).

Foulds, N. C., et al., "Enzyme Entrapment in Electrically Conducting Polymers: Immobilisation of Glucose Oxidase in Polypyrrole and its Application in Amperometric Glucose Sensors", Journal of the Chemical Society, Faraday Transactions 1, vol. 82, 1986, pp. 1259–1264.

Foulds, N. C., et al., "Immobilization of Glucose Oxidase in Ferrocene–Modified Pyrrole Polymers", Analytical Chemistry, vol. 60, No. 22, 1988, pp. 2473–2478.

Fraser, et al. Biosensors in the Body, Continous in Vivo Monitoring, Wiley Series of Biomaterials Science and Engineering, 1997, Chapter 4, Principles of Long–term Fully Implantable Sensors with Emphasis on Radiotelemetric Monitoring of Blood Glucose from inside a Subcutaneous Foreign Body Capsule pp. 118–137.

Frew, J. E., et al., "Electron–Transfer Biosensors", Philosophical Transactions of The Royal Society of London, vol. 316, 1987, pp. 95–106.

Frohnauerg, M. K., et al., "Graphical Human Insulin Time–Activity Profiles Using Standardized Definitions", Diabetes Technology & Therapeutics, vol. 3, No. 3, 2001, pp. 419–429.

Frost, M. C., et al., "Implantable Chemical Sensors for Real–Time Clinical Monitoring: Progress and Challenges", Current Opinion in Chemical Biology, vol. 6, 2002, pp. 633–641.

Garg, S. K., et al., "Correlation of Fingerstick Blood Glucose Measurements with Gluco Watch Biographer Glucose Results in Young Subjects with Type 1 Diabetes", Diabetes Care, vol. 22, No. 10, 1999, pp. 1708–1714.

Garg, S. K., et al., "Improved Glucose Excursions Using an Implantable Real–Time Continuous Glucose Sensor in Adults with Type 1 Diabetes", Diabetes Care, vol. 27, No. 3, 204, pp. 734–738.

Geller, R. L., et al., "Use of an Immunoisolation Device for Cell Transplantation and Tumor Immunotherapy", Annals of the New York Academy of Sciences, vol. 831, 1997, pp. 438–451.

Gerritsen, M., "Problems Associated with Subcutaneously Implanted Glucose Sensors", Diabetes Care, vol. 23, No. 2, 2000, pp. 143–145.

Gerritsen, M., et al., "Influence of Inflammatory Cells and Serum on the Performance of Implantable Glucose Sensors", Journal of Biomedical materials Research, vol. 54, 2001, pp. 69–75.

Gerritsen, M., et al., "Performance of Subcutaneously Implanted glucose Sensors for Continuous Monitoring", The Netherlands Journal of Medicine, vol. 54, 1999, pp. 167–179.

Gilligan, B. J., et al., "Evaluation of a Subcutaneous Glucose Sensor Out to 3 Months in a Dog Model", Diabetes Care, vol. 17, No. 8, 1994, pp. 882–887.

Gilligan, B. J., et al., "Feasibility of Continuous Long–Term Glucose Monitoring from a Subcutaneous Glucose Sensor in Humans", Diabetes Technology & Therapeutics, vol. 6, No. 3, 2004, pp. 378–386.

Godsland et al., "Maximizing the Success Rate of Minimal Model Insulin Sensitivity Measurement in Humans: The Importance of Basal Glucose Levels," Clinical Sciences, (2001) 101, 1–9.

Gorton, L., et al., "Selective Detection in Flow Analysis Based on the Combination of Immobilized Enzymes and Chemically Modified Electrodes", Analytica Chimica Acta, vol. 250, 1991, pp. 203–248.

Gough, D. A., et al., "Immobilized Glucose Oxidase in Implantable Glucose Sensor Technology", Diabetes Technology & Therapeutics, vol. 2, No. 3, 2000, pp. 377–380.

Graham, "Poly(ethylene Oxide) and Related Hydrogels," Hydrogels in Medicine and Pharmacy, Chapter 4, CRC Press, 1987.

Grant, R., et al., Grant & Hackh's Chemical Dictionary, 1987, pp. 88, 89, 389, 390, 398.

Gregg, B. A., et al., "Cross–Linked Redox Gels Containing Glucose Oxidase for Amperometric Bionsensor Applications", Analytical Chemistry, vol. 62, No. 3, 1990, pp. 258–263.

Gregg, B. A., et al., "Redox Polymer Films Containing Enzymes. 1. A Redox–Conducting Epoxy Cement: Synthesis, Characterization, and Electrocatalytic Oxidation of Hydroquinone", Journal of Physical Chemistry, vol. 95, No. 15, 1991, 5970–5975.

Gross, T. M., et al., "Efficacy and Reliability of the Continuous Glucose Monitoring System", Diabetes Technology & Therapeutics, vol. 2, Sup. 1, 2000, pp. S19–S26.
Gross, T. M., et al., "Performance Evaluation of the MiniMed® Continuous Glucose Monitoring System During Patient Home Use", Diabetes Technology & Therapeutics, vol. 2, No. 1, 2000, pp. 49–56.
Gross, Todd, "Letters to the Editor Re: Diabetes Technology & Therapeutics, 2000;2:49–56," vol. 3, No. 1, p. 130–131, 2001.
Hale, P. D., et al., et al., "A New Class of Amperometric Biosensor Incorporating a Polymeric Electron–Transfer Mediator", Journal of the American Chemical Society, vol. 111, No. 9, 1989, pp. 3482–3484.
Hall, S. B., et al., "Electrochemical Oxidation of Hydrogen Peroxide at Platinum Electrodes: Part I: An Absorption–Controlled Mechanism", Electrochimica Acta, vol. 43, No. 5–6, 1998, pp. 579–588.
Hall, S. B., et al., "Electrochemical Oxidation of Hydrogen Peroxide at Platinum Electrodes: Part II: Effect of Potential", Electrochimica Acta, vol. 43, No. 14–15, 1998, pp. 2015–2024.
Hall, S. B., et al., "Electrochemical Oxidation of Hydrogen Peroxide at Platinum Electrodes: Part III: Effect of Temperature", Electrochimica Acta, vol. 44, 1999, pp. 2455–2462.
Hall, S. B., et al., "Electrochemical Oxidation of Hydrogen Peroxide at Platinum Electrodes: Part IV: Phosphate Buffer Dependence", Electrochimica Acta, vol. 44, 1999, pp. 4573–4582.
Hall, S. B., et al., "Electrochemical Oxidation of Hydrogen Peroxide at Platinum Electrodes: Part V: Inhibition by Chloride", Electrochimica Acta, vol. 45, 2000, pp. 3573–3579.
Hamilton Company, "Complete Guide to Selecting the Right Hamilton Gastight Microliter, and Specialty Syringe for your Application," May 2006.
Hamilton Needle Gauge Index, www.hamiltoncompany.com, undated.
Harrison, D. J., et al., "Characterization of Perfluorosulfonic Acid Polymer Coated Enzyme Electrodes and a Miniatureized Integrated Potentiostat for Glucose Analysis in Whole Blood", Analytical Chemistry, vol. 60, No. 19, 1988, pp. 2002–2007.
Hawkridge, F. M., et al., "Indirect Coulometric Titration of Biological Electron Transport Components", Analytical Chemistry, vol. 45, No. 7, 1973, pp. 1021–1027.
Hawley's Condensed Chemical Dictionary (14.sup.th Edition), John Wiley & Sons, Richard J. Lewis, Sr., p. 1248.
Heise, T., et al., "Hypoglycemia Warning Signal and Glucose Sensors: Requirement and Concepts", Diabetes Technology & Therapeutics, vol. 5, No. 4, 2003, pp. 563–571.
Heller, A. "Electrical Connection Enzyme Redox Centers to Electrodes", Journal of Physical Chemistry, vol. 96, No. 9, 1990, pp. 3579–3587.
Heller, A., "Electrical Wiring of Redox Enzymes", Accounts of Chemical Research vol. 23, No. 5, 1990, 128–134.
Heller, A., "Implanted Electrochemical Glucose Sensors for the Management of Diabetes", Annual Review of Biomedical Engineering, vol. 1 1999, pp. 153–175.
Heller, A., "Plugging Metal Connectors into Enzymes", Nature Biotechnology, vol. 21, No. 6, 2003, pp. 6331–632.
Heller, A., et al., "Amperometric Biosensors Based on Three–Dimensional Hydrogel–Forming Epoxy Networks", Sensors and Actuators B, vol. 13–14, 1993, pp. 180–183.
Hicks, "In Situ Monitoring," Clin. Chem. 31/12, 1931–1935 (1985).
Hitchman, M. L., "Measurement of Dissolved Oxygen: Chapter 3: Principles of Voltammetry", Chemical Analysis, vol. 49, 1978, pp. 34–123.
Hrapovic, S., et al., "Picoamperometric Detection of Glucose at Ultrasmall Platinum–Based Biosensors: Preparation and Characterization", Analytical Chemistry, vol. 75, No. 14, 2003, pp. 3308–3315.
Hu et al., "A Needle–type enzyme–based lactate sensor for in vivo monitoring," Analytical Chimica Acta, 281 (1993) 503–511.
Huang, C. J., et al., "Electrochemical Generation of Oxygen", Electrochemistry Research laboratory, 1972, pp. 1–115.
Hunter, I., Jones, L., Kanigan, T., Brenan, C., Sanbol, L. Sosnowski, L. 2000. Minimally Invasive Glucose Sensor and Insulin Delivery System. MIT Home Automation and Healthcare Consortium. Progress Report No. 25.
Ianniello, R. M., et al., "Differential Pulse Voltammetric Study of Direct Electron Transfer in Glucose Oxidase Chemically Modified Graphite Electrodes", Analytical Chemistry, vol. 54, No. 7, 1982, pp. 1098–1101.
Ianniello, R. M., et al., "Immobilized Enzyme Chemically Modified Electrode as an Amperometric Sensor", Analytical Chemistry, vol. 53, No. 13, 1981, pp. 2090–2095.
Ikeda, T., et al., "Glucose Oxidase–Immobilized Benzoquinone–Carbon Paste Electrode as a Glucose Sensor", Agricultural and Biological Chemistry, vol. 49, No. 2, 1985, pp. 541–543.
Ikeda, T., et al., "Kinetics of Outer–Sphere Electron Transfers Between Metal Complexes in Solutions and Polymeric Films on Modified Electrodes", Journal of the American Chemical Society, vol. 103, No. 25, 1981, pp. 7422–7425.
Ishikawa, M., et al., "Initial Evaluation of a 290–μm Diameter Subcutaneous Glucose Sensor: Glucose Monitoring with a Biocompatible, Flexible–Wire, Enzyme–Based Amperometric Microsensor in Diabetic and Nondiabetic Humans", Journal of Diabetes and Its Complications, vol. 12, 1998, pp. 295–301.
Jablecki, M., et al., "Simulations of the Frequency Response of Implantable Glucose Sensors"Analytical Chemistry, vol. 72, No. 8, 2000, pp. 1853–1859.
Jaremko, J., et al., "Advances Toward the Implantable Artificial Pancreas for Treatment of Diabetes", Diabetes Care, vol. 21, No. 3, 1998, pp. 444–450.
Jensen, M. B., et al., "Fast Wave Forms for Pulsed Electrochemical Detection of Glucose by Incorporation of Reductive Desorption of Oxidation Products", Analytical Chemistry, vol. 69, No. 9, 1997, pp. 1776–1781.
Jeong, et al. 2003. In vivo calibration of the subcutaneous amperometric glucose sensors using a non–enzyme electrode. Biosensors and Bioelectronics 19:313–319.
Jeutter, D. C., "A Transcutaneous Implanted Battery Recharging and Biotelemeter Power Switching System", IEEE Transactions on Biomedical Engineering, vol. 29, No. 5, 1982, pp. 314–321.
Johnson et al., "In vivo evaluation of an electroenzymatic glucose sensor implanted in subcutaneous tissue," Biosensors and Bioelectronics, (1992) 7:709–714.
Johnson, J. M., et al., "Potential–Dependent Enzymatic Activity in an Enzyme Thin–Layer Cell", Analytical Chemistry, vol. 54, No. 8, 1982, pp. 1377–1383.

Johnson, K. W., "Reproducible Electrodeposition of Biomolecules for the Fabrication of Miniature Electroenzymatic Biosensors", Sensors and Actuators B, vol. 5, 1991, pp. 85–89.

Johnson, P. C., "Peripheral Circulation", John Wiley & Sons, 1978, pp. 198.

Jonsson, G., et al., "An Amperometric Glucose Sensor Made by Modification of a Graphite Electrode Surface With Immobilized Glucose Oxidase and Adsorbed Mediator", Biosensors, vol. 1, 1985, pp. 355–368.

Josowicz, M., et al., "Electrochemical Pretreatment of Thin Film Platinum Electrodes", Journal of the Electrochemical Society, vol. 135 No. 1, 1988, pp. 112–115.

Jovanovic, L., "The Role of Continuous Glucose Monitoring in Gestational Diabetes Mellitus", Diabetes Technology & Therapeutics, vol. 2, Sup. 1, 2000, pp. S67–S71.

Jungheim, K., et al., "How Rapid Does Glucose Concentration Change in Daily Life of Patients with Type 1 Diabetes?", pp. 250.

Jungheim, K., et al., "Risky Delay of Hypoglycemia Detection by Glucose Monitoring at the Arm", Diabetes Care, vol. 24, No. 7, 2001, pp. 1303–1304.

Kang, S. K., et al., "In Vitro and Short–Term In Vivo Characteristics of a Kel–F Thin Film Modified Glucose Sensor", Analytical Sciences, vol. 19, 2003, pp. 1481–1486.

Kaplan, 2004 "Wiley Electrical And Electronics Engineering Dictionary," John Wiley & Sons, Hoboken, New Jersey: p. 141–142, 548–549.

Kaplan, S. M., "Wiley Electrical and Electronics Engineering Dictionary", IEEE Press, 2004, pp. 141, 142, 548, 549.

Kargol, M., et al., "Studies on the Structural Properties of Porous Membranes: Measurement of Linear Dimensions of Solutes", Biophysical Chemistry, vol. 91, 2001, pp. 263–271.

Katakis, I., et al., "Electrostatic Control of the Electron Transfer Enabling Binding of Recombinant Glucose Oxidase and Redox Polyelectrolytes", Journal of the American Chemical Society, vol. 116, No. 8, 1994, pp. 3617–3618.

Katakis, I., et al., "L–a–Glycerophosphate and L–Lactate Electrodes Based on the Electrochemical 'Wiring' of Oxidases", Analytical Chemistry, vol. 64, No. 9, 1992, pp. 1008–1013.

Kaufman, F. R., "Role of the Continuous Glucose Monitoring System in Pediatric Patients", Diabetes Technology & Therapeutics, vol. 2, Sup. 1, 2000, pp. S49–S52.

Kawagoe et al., "Enzyme–Modified Organic Conducting Salt Microelectrode," Anal. Chem. 1991, 63, 2961–2965.

Kemp, "Theoretical Aspects of One–Point Calibration," Clinical Chemistry, 30/7 1163–1167 (1984).

Kemp, G. J., "Theoretical Aspects of One–Point Calibration: Causes and Effects of Some Potential Errors, and Their Dependence on Concentration," Clinical Chemistry, vol. 30, No. 7, 1984, pp. 1163–1167.

Kenausis, G., et al., "'Wiring' of Glucose Oxidase and Lactate Oxidase Within a Hydrogel Made with Poly(vinyl pyridine) complexed with [Os(4,4'–dimethoxy–2, 2'–bipyridine)2Cl]+/2+", Journal of the Chemical Society, Faraday Transactions, vol. 92, No. 20, 1996, pp. 4131–4136.

Kerner et al., "The function of a hydrogen peroxide–detecting electroenzymatic glucose electrode is markedly impaired in hum subcutaneous tissue and plasma," (1993) Biosensors & Bioelectronics 8:473–482.

Kerner, W., "Implantable Glucose Sensors: Present Status and Future Developments", Experimental and Clinical Endocrinology & Diabetes, vol. 109, Supplement 2, 2001, pp. S341–S346.

Kerner, W., et al., "The Function of a Hydrogen Peroxide–Detecting Electroenzymatic Glucose Electrode is Markedly Impaired in Human Subcutaneous Tissue and Plasma," Biosensors & Bioelectronics, vol. 8, 1993, pp. 473–482.

Kiechle, F.L. The impact of continous glucose monitoring on hospital point–of–care testing programs. Diabetes Technol Ther 2001, 3, 647–649.

Klueh, et al. Use of Vascular Endothelia Cell Growth Factor Gene Transfer to Enhance Implantable Sensor Function in vivo, Biosensor Function and Vegf–Gene Transfer, 2003. pp. 1072–1086.

Korf, J. et al., "Monitoring of Glucose and Lactate Using Microdialysis: Applications in Neonates and Rat Brain", Developmental Neuroscience, vol. 15, No. 3–5, pp. 240–246 (1993).

Korf, J., et al., "Monitoring of Glucose and Lactate Using Microdialysis: Applications in Neonates and Rat Brain," Development Neuroscience, vol. 15, 1993, pp. 240–246.

Koschinsky, T., et al., "New Approach to Technical and Clinical Evaluation of Devices for Self–Monitoring of Blood Glucose", Diabetes Care, vol. 11, No. 9, 1988, pp. 619–629.

Koschinsky, T., et al., "Sensors for Glucose Monitoring: Technical and Clinical Aspects" Diabetes Metabolism Research and Reviews, vol. 17, 2001, pp. 113–123.

Koudelka, M., et al., "In–Vivo Behaviour of Hypodermically Implanted Microfabricated Glucose Sensors", Biosensors & Bioelectronics, vol. 6, 1991, pp. 31–36.

Kovatchev, B. P., et al., "Evaluating the Accuracy of Continuous Glucose–Monitoring Sensors", Diabetes Care, vol. 27, No. 8, 2004, pp. 1922–1928.

Kraver, K. L., et al., "A Mixed–Signal Sensor Interface Microinstrument", Sensors and Actuators A, vol. 91, 2001, pp. 266–277.

Krouwer, J. S., "Setting Performance Goals and Evaluating Total Analytical error for Diagnostic Assays", Clinical Chemistry, vol. 48, No. 6, 2002, pp. 919–927.

Kruger, D., et al., "Psychological Motivation and Patient Education: A Role for Continuous Glucose Monitoring", Diabetes Technology & Therapeutics, vol. 2, Sup. 1, 2000, pp. S93–S97.

Kulys, J., et al., "Mediatorless Peroxidase Electrode and Preparation of Bienzyme Sensors", Bioelectrochemistry and Bioenergetics, vol. 24, 1990, pp. 305–311.

Kurnik, R. T., et al., "Application of the Mixtures of Experts Algorithm for Signal Processing in a Noninvasive Glucose Monitoring System" Sensors and Actuators B, vol. 60, 1990, pp. 19–26.

Lacourse, W. R., et al., "Optimization of Waveforms for Pulsed Amperometric Detection of Carbohydrates Based on Pulsed Voltammetry", Analytical Chemistry, vol. 65, No. 1, 1993, pp. 50–55.

Lager, W., et al., "Implantable Electrocatalytic Glucose Sensor", Hormone Metabolic Research, vol. 26, 1994, pp. 526–530.

Laurell, T., "A Continuous Glucose Monitoring System Based on Microdialysis", Journal of Med. Eng. & Tech., vol. 16, No. 5, pp. 187–193 (Sep./Oct. 1992).

Lee, E., et al., "Effect of Pore Size, Void Volume, and Pore Connectivity on Tissue Responses to Porous Silicone Implants", Transactions on the Twenty–Fifth Annual Meeting of the Society for Biomaterials, vol. 22, 1999, pp. 171.

Lerner, H., et al., "An Implantable Electrochemical Glucose Sensor", Annals of the New York Academy of Sciences, vol. 428, 1984, pp. 263–278.

Leypoldt, J. K., et al., "Model of a Two–Substrate Enzyme Electrode for Glucose", Analytical Chemistry, vol. 56, No. 14, 1984, pp. 2896–2904.

Lindner, E., et al., "Flexible (Kapton–Based) Microsensor Arrays of High Stability for Cardiovascular Applications", Journal of the Chemical Society, Faraday Transactions, vol. 89, No. 2, 1993, pp. 361–367.

Liu, W., et al., "A Neuro–Stimulus Chip with Telemetry Unit for Retinal Prosthetic Device", IEEE Journal of Solid–State Circuits, vol. 35, No. 10, 2000, pp. 1487–1497.

Loffler P. et al. Separation and determination of traces of ammonia in air by means of chromatomembrane cells, Fresenius J. Anal. Chem., 1995, 352: 613–614, entire document.

Lortz, J., et al., "What is Bluetooth? We Explain The Newest Short–Range Connectivity Technology", Smart Computing Learning Series, Wireless Computing, vol. 8, Issue 5, 2002, pp. 72–74.

Luong, J. H. T., et al., "Solubilization of Multiwall Carbon Nanotubes by 3–Aminopropyltriethoxysilane Towards the Fabrication of Electrochemical Biosensors with Promoted Electron Transfer". Electroanalysis, vol. 16, No. 1–2, 2004, pp. 132–139.

Lyman D. 1960. Polyurethanes. I. The Solution Polymerization of Diisocyanates with Ethylene Glycol. J. Polymer Sci XLV:45–49.

Lynch, S. M., et al., "Estimation–Based Model Predictive Control of Blood Glucose in Type I Diabetics: A Simulation Study", Proceedings of the IEEE 27th Annual Northeast Bioengineering Conference, 2001, pp. 79–80.

Lynn, P. A., "Recursive Digital Filters for Biological Signals", Medical and Biological Engineering, vol. 9, 1971, pp. 37–43.

Maidan, R., et al., "Elimination of Electrooxidizable Interferant–Produced Currents in Amperometric Biosensors", Analytical Chemistry, vol. 64, No. 23, 1992, pp. 2889–2896.

Makale, M. T., et al., "Tissue Window Chamber System for Validation of Implanted Oxygen Sensors", American Journal of Physiology: Heart and Circulatory Physiology, vol. 284, 2003, pp. H2288–H2294.

Malin, S. F., et al., "Noninvasive Prediction of Glucose by Near–Infrared Diffuse Reflectance Spectoscopy", Clinical Chemistry, vol. 45, No. 9, 1999, pp. 1651–1658.

Mancy, K. H., et al., "A Galvanic Cell Oxygen Analyzer", Journal of Electroanalytical Chemistry, vol. 4, 1962, pp. 65–92.

Maran, A., et al., "Continuous Glucose Monitoring in Diabetic Patients", Diabetes Care, vol. 25, No. 2, 2002, pp. 347–352.

March, W. F., "Dealing with the Delay", Diabetes Technology & Therapeutics, vol. 4, No. 1, 2002, pp. 49–50.

Marko–Varga, G. et al., "Enzyme–Based Biosensor as a Selective Detection Unit in Column Liquid Chromatography", Journal of Chromatography A, vol. 660, pp. 153–167 (1994).

Martin, R. F., "General Deming Regression for Estimating Systematic Bias and Its Confidence Interval in Method–Comparison Studies", Clinical Chemistry, vol. 46, No. 1, 2000, pp. 100–104.

Mastrototaro, J. J., "The MiniMed Continuous Glucose Monitoring System", Diabetes Technology & Therapeutics, vol. 2, Sup. 1, 2000, pp. S13–S18.

Mastrototaro, J. J., et al., "An Electroenzymatic Glucose Sensor Fabricated on a Flexible Substrate", Sensors and Actuators B, vol. 5, 1991, pp. 139–144.

Mastrototaro, J. J., et al., "Reproducibility of the Continuous Glucose Monitoring System Matches Previous Reports and the Intended Use of the Product" and "Response to Mastrototaro and Gross", Diabetes Care, vol. 26, No. 1, 2003, pp. 256–257.

Matsumoto et al. 1998. A micro–planar amperometeric glucose sensor unsusceptible to interference species. Senors and Actuators B 49:68–72.

Matsumoto, et al. 2001. A long–term lifetime amperometric glucose sensor with a perfluorocarbon polymer coating. Biosens Bioelectron 16:271–276.

Mauras et al., "Lack of accuracy of continuous glucose sensors in healthy, nondiabetic children: results of the Diabetes Research in Children Network (DirecNet) accuracy study," J Pediatr. Jun. 2004;144(6):770–5.

McCartney, L. J., et al., "Near–Infrared Fluorescence Lifetime Assay for Serum Glucose Based on Allophycocyanin–Labeled Concanavalin A", Analytical Biochemistry, vol. 292, 2001, pp. 216–221.

McGarraugh, G., et al., "Glucose Measurements Using Blood Extracted from the Forearm and the Finger", TheraSense, Inc., 16 Pages.

McGarraugh, G., et al., "Physiological Influences on Off–Finger Glucose Testing", Diabetes Technology & Therapeutics, vol. 3, No. 3, 2001, pp. 367–376.

McGrath, M. J., et al., "The Use of Differential Measurements with a Glucose Biosensor for Interference Compensation During Glucose Determinations by Flow Injection Analysis", Biosensors & Bioelectronics, vol. 10, 1995, pp. 937–943.

McKean, et al., 1988, "A Telemetry–Instrumentation System For Chronically Implanted Glucose And Oxygen Sensors," IEE Transactions on Biomedical Engineering, vol. 35, No. 7: p. 526–532.

McNeil, C. J., et al., "Thermostable Reduced Nicotinamide Adenine Dinucleotide Oxidase: Application to Amperometric Enzyme Assay", Analytical Chemistry, vol. 61, No. 1, 1989, pp. 25–29.

Memoli, A., et al., "A Comparison Between Different Immobilized Glucoseoxidase–Based Electrodes", Journal of Pharmaceutical and Biomedical Analysis, vol. 29, 2002, pp. 1045–1052.

Merriam–Webster Unabridged Medical Dictionary, Definition: Protocol, http://unabridged .merriam–webster.com/cgi–bin/medical?va=protocol, Dec. 21, 2005.

Merriam–Webster's Medical Desk Dictionary, 2005, Merriam–Webster, Incorporated, Springfield, Massachusetts, U.S.A.: p. 843.

Metzger, M., et al., "Reproducibility of Glucose Measurements Using the Glucose Sensor", Diabetes Care, vol. 25, No. 6, 2002, pp. 1185–1191.

Miller, K. M., et al., "Generation of IL1–like Activity in Response to Biomedical Polymer Implants: A Comparison of In Vitro and In Vivo Models", Journal of Biomedical Materials Research, vol. 23, 1989, pp. 1007–1026.
Miller, K. M., et al., "Human Monocyte/Macrophage Activation and Intereleukin 1 Generation by Biomedical Polymers", Journal of Biomedical Materials Research, vol. 22, 1988, pp. 713–731.
Miller, K., M., et al., "In Vitro Stimulation of Fibroblast Activity by Factors Generated from Human Monocytes Activated by Biomedical Polymers", Journal of Biomedical Materials Research, vol. 23, 1989, pp. 911–930.
Miyawaki, O., et al., "Electrochemical and Glucose Oxidase Coenzyme Activity of Flavin Adenine Dinucleotide Covalently Attached to Glassy Carbon at the Adenine Amino Group", Biochimica et Biophysica Acta, vol. 838, 1985, pp. 60–68.
Moatti–Sirat, D., et al., "Evaluating In Vitro and In Vivo the Interference of Ascorbate and Acetaminophen on Glucose Detection by a Needle–Type Glucose Sensor", Biosensors & Bioelectronics, vol. 7, 1992, pp. 345–352.
Moatti–Sirat, D., et al., "Reduction of Acetaminophen Interference in Glucose Sensors by a Composite Nafion Membrane: Demonstration in Rats and Man", Diabetologia, vol. 37, 1994, pp. 610–616.
Moatti–Sirat, D., et al., "Towards Continuous Glucose Monitoring: In Vivo Evaluation of a Miniaturized Glucose Sensor Implanted for Several Days in Rat Subcutaneous Tissue", Diabetologia, vol. 35, 1992, pp. 224–230.
Monsod, T. P., et al., "Do Sensor Glucose Levels Accurately Predict Plasma Glucose Concentrations During Hypoglycemia and Hyperinsulinemia?" Diabetes Care, vol. 25, No. 5, 2002, pp. 889–893.
Moussy, et al. Biomaterials community examines biosensor biocompatibility. Diabetes Technol Ther 2000, 2, 473–477.
Moussy, F., et al., "A Miniaturized Nafion–Based Glucose Sensor: In Vitro and In Vivo Evaluation in Dogs", The International Journal of Artificial Organs, vol. 17, No. 2, 1994, pp. 88–94.
Mowery, K. A., et al., "Preparation and Characterization of Hydrophobic Polymeric Films that are Thromboresistant via Nitric Oxide Release", Biomaterials, vol. 21, 2000, pp. 9–21.
Murphy et al., "Polymer membranes in clinical sensor application, II. The design and fabrication of permselective hyrdogels for electrochemical devices," Biomaterials 1992, vol. 13, No. 14, 979–990.
Myler, et al. Ultra–thin–polysiloxane–film–composite membranes for the optimisation of amperometric oxidase enzyme electrodes. Biosens Bioelectron 2002, 17, 35–43.
Nagy, G., et al., "A New Type of Enzyme Electrode: The Ascobic Acid Eliminator Electrode", Life Sciences, vol. 31, No. 23, 1982, pp. 2611–2616.
Nakamura, S., et al., "Effect of Periodate Oxidation on the Structure and Properties of Glucose Oxidase", Biochimica et Biophysica Acta., vol. 445, 1976, pp. 294–308.
Nam, Y. S., et al., "A Novel Fabrication Method of Macroporous Biodegradable Polymer Scaffolds Using Gas Foaming Salt as a Porogen Additive", Journal of Biomedical Materials Research, vol. 53, 2000, pp. 1–7.
Nappholz, T. A., "Programmers for Implants: A Need for Radical Change", 18th Annual International Conference of the IEEE Engineering in Medicine and Biology Society, Amsterdam, 1996, pp. 1274–1275.
Narasimham, K., et al., "p–Benzoquinone Activation of Metal Oxide Electrodes for Attachment of Enzymes", Enzyme and Microbial Technology, vol. 7, 1985, pp. 283–286.
Neuburger, G. G., et al., "Pulsed Amperometric Detection of Carbohydrates at Gold Electrodes with a Two–Step Potential Waveform", Analytical Chemistry, vol. 59, No. 1, 1987, pp. 150–154.
Ohara, T. J., "Osmium Bipyridyl Redox Polymers Used in Enzyme Electrodes", Platinum Metals Review, vol. 39, No. 2, 1995, pp. 54–62.
Ohara, T. J., et al., "Glucose Electrodes Based on Cross–Linked [Os(bpy)2Cl]+/2+ Complexed Poly(1–Vinylimidazole) Films", Analytical Chemistry, vol. 65, No. 23, 1993, pp. 3512–3517.
Ohara, T. J., et al., "'Wired' Enzyme Electrodes for Amperometric Determination of Glucose or Lactate in the Presence of Interfering Substances", Analytical Chemistry, vol. 66, No. 15, 1994, pp. 2451–2457.
Okuda, J., et al., "Mutarotase Effect on Micro Determinations of D–Glucose and Its Anomers with β–D–Glucose Oxidase", Analytical Biochemistry, vol. 43, 1971, pp. 312–315.
Olievier, C. N., et al., "In Vivo Measurement of Carbon Dioxide Tension with a Miniature Electrodes", Pflugers Archiv: European Journal of Physiology, vol. 373, 1978, pp. 269–272.
Paddock, R. M., et al., "Electrocatalytic Reduction of Hydrogen Peroxide via Direct Electron Transfer From Pyrolytic Graphite Electrodes to Irreversibly Adsorbed Cyctochrome C Peroxidase", Journal of ElectroAnalytical Chemistry, vol. 260, 1989, pp. 487–494.
Palleschi, G., et al., "A Study of Interferences in Glucose Measurements in Blood by Hydrogen Peroxide Based Glucose Probes", Analytical Biochemistry, vol. 159, 1986, pp. 114–121.
Palmisano, F., et al., "Simultaneous Monitoring of Glucose and Lactate by an Interference and Cross–Talk Free Dual Electrode Amperometric Biosensor Based on Electropolymerized Thin Films", Biosensors & Bioelectronics, vol. 15, 2000, pp. 531–539.
Pankratov, I., et al., "Sol–Gel Derived Renewable–Surface Biosensors", Journal of ElectroAnalytical Chemistry, vol. 393, 1995, pp. 35–41.
Panteleon, A. E., et al., "The Role of the Independent Variable to Glucose Sensor Calibration", Diabetes Technology & Therapeutics, vol. 5, No. 3, 2003, pp. 401–410.
Parker, R. S., et al., "A Model–Based Algorithm for Blood Glucose Control in Type I Diabetic Patients", IEEE Transactions on Biomedical Engineering, vol. 46, No. 2, 1999, pp. 148–157.
Patel, H., et al., "Amperometrid Glucose Sensors Based on Ferrocene Containing Polymeric Electron Transfer Systems—A Preliminary Report", Biosensors and Bioelectronics, vol. 18, 2003, pp. 1073–1076.
Pathak, C., et al., "Rapid Photopolymerization of Immunoprotective Gels in Contact with Cells and Tissue", Journal of the American Chemical Society, vol. 114, No. 221, 1992, pp. 8311–8312.
Petrou, et al., 2003, "Microdevice with Integrated Dialysis Probe and Biosensor Array for Multi–Analyte Monitoring Continuous," Biosensors & Bioelectronics, vol. 18: p. 613–619.

Philips and Smith, "Biomedical Applications of Polyurethanes: Implications of Failure Mechanisms," J. Biomat. Appl. 3:202–227 (1988).
Pichert, J. W., et al., "Issues for the Coming Age of Continuous Monitoring", The Diabetic Educator, vol. 26, No. 6, 2000, pp. 969–980.
Pickup et al., "Responses and calibration of amperometric glucose sensors implanted in the subcutaneous tissue of man," Acta Diabetol. 30:143–148 (1993).
Pickup, et al., "Implantable glucose sensors: choosing the appropriate sensing strategy," Biosensors, 1:335–346 (1987/88).
Pickup, J. C., et al., "Responses and Calibration of Amperometric Glucose Sensors Implanted in the Subcutaneous Tissue of Man", Acta Diabetologica, vol. 30, 1993, pp. 143–148.
Pickup, J., "Developing Glucose Sensors for In Vivo Use", Tibtech, vol. 11, 1993, pp. 285–291.
Pickup, J., et al., "In Vivo Molecular Sensing in Diabetes Mellitus: An Implantable Glucose Sensor with Direct Electron Transfer", Diabetologia, vol. 323, 1989, pp. 213–217.
Pickup, J., et al., "Potentially–Implantable, Amperometric Glucose Sensors with Mediated Electron Transfer: Improving the Operating Stability", Biosensor, vol. 4, 1989, pp. 109–119.
Pineda L. M. et al. Bone regeneration with resorbable polymeric membranes. III. Effect of poly(L–lactide) membrane pore size on bone healing process in large defects, J. Biomedical Materials Research, 1996, 31: 385–394, entire document.
Pishko, et al., 1991, "Amperometric Glucose Microelectrodes Prepared Through Immobilization Of Glucose Oxidase In Redox Hydrogels," Analytical Chemistry, vol. 63, No. 20: p. 2268–2272.
Pishko, M. V., et al., "Amperometric Glucose Microelectrodes Prepared Through Immobilization of Glucose Oxidase in Redox Hydrogels", Analytical Chemistry, vol. 63, No. 20, 1991, pp. 2268–2272.
Pitzer, K. R., et al., "Detection of Hypoglycemia with the Gluco Watch Biographer", Diabetes Care, vol. 24, No. 5, 2001, pp. 881–885.
Poirier, J. Y., et al., "Clinical and Statistical Evaluation of Self–Monitoring Blood Glucose Meters", Diabetes Care, vol. 21, No. 11, 1998, pp. 1919–1924.
Poitout, V., et al., "A Glucose Monitoring System for On Line Estimation in Man of Blood Glucose Concentration Using a Miniaturized Glucose Sensor Implanted in the Subcutaneous Tissue and a Wearable Control Unit", Diabetolgia, vol. 36, 1993, pp. 658–663.
Poitout, V., et al., "Calibration in Dogs of a Subcutaneous Miniaturized Glucose Sensor Using a Glucose Meter for Blood Glucose Determination", Biosensor & Bioelectronics, vol. 7, 1992, pp. 587–592.
Poitout, V., et al., "In Vitro and In Vivo Evaluation in Dogs of a Miniaturized Glucose Sensor", ASAIO Transactions, vol. 37, No. 3, 1991, pp. M298–M300.
Pollak, A. et al., "Enzyme Immobilization by Condensation Copolymerization into Cross–Linked Polyacrylamide Gels", Journal of the American Chemical Society, vol. 102, No. 20, 1980, pp. 6324–6336.
Poscia, et al., 2003, "A Microdialysis Technique for Continuous Subcutaneous Glucose Monitoring in Diabetic Patients (Part 1)," Biosensors & Bioelectronics, vol. 18: p. 891–898.
Postlethwaite, T. A., et al., "Interdigitated Array Electrode as an Alternative to the Rotated Ring—Disk Electrode for Determination of the Reaction Products of Dioxygen Reduction", Analytical Chemistry, vol. 68, No. 17, 1996, pp. 2951–2958.
Quinn, C. A. P., et al., "Biocompatible, Glucose–Permeable Hydrogel for In Situ Coating of Implantable Biosensors", Biomaterials, vol. 18, No. 24, 1997, pp. 1665–1670.
Quinn, C. P., et al., "Kinetics of Glucose Delivery to Subcutaneous Tissue in Rats Measured with 0.3–mm Amperometric Microsensors", The American Physiological Society, 1995, E155–E161.
Ratner, B. D., "Reducing Capsular Thickness and Enhancing Angeiogenesis Around Implant Drug Release Systems", Journal of Controlled Release, vol. 78, 2002, pp. 211–218.
Reach, G., "Which Threshold to Detect Hypoglycemia?", Diabetes Care, vol. 24, No. 5, 2001, pp. 803–804.
Reach, G., et al., "A Method of Evaluating In Vivo the Functional Characteristics of Glucose Sensors", Biosensors 2, 1986, pp. 211–220.
Reach, G., et al., "Can Continuous Glucose Monitoring Be Use for the Treatment of Diabetes?", Analytical Chemistry, vol. 64, No. 6, 1992, pp. 381–386.
Reach, G., et al., "Letters to the Editor: Re: Diabetes Technology & Therapeutics, 2000; 2:49–56", Diabetes Technology & Therapeutics, vol. 3, No. 1, 2001, pp. 129–131.
Rebrin, K., et al., "Automated Feedback Control of Subcutaneous Glucose Concentration in Diabetic Dogs", Diabetologia, vol. 32, 1989, pp. 573–576.
Rebrin, K., et al., "Subcutaneous Glucose Predicts Plasma Glucose Independent of Insulin: Implications for Continuous Monitoring", The American Physiological Society, 1999, pp. E561–E571.
Reusch, W., "Other Topics: Organometallic Chemistry: Organometallic Compounds: Main Group Organometallic Compounds," Virtual Textbook of Organic Chemistry, 1999, Rev. 2007, 25 pages.
Rhodes, R. K., et al., "Prediction of Pocket–Portable and Implantable Glucose Enzyme Electrode Performance from Combined Species Permeability and Digital Simulation Analysis", Analytical Chemistry, vol. 66, No. 9, 1994, pp. 1520–1529.
Rinken, T., et al., "Calibration of Glucose Biosensors By Using Pre–Study State Kinetic Data", Biosensors & Bioelectronics, vol. 13, 1998, pp. 801–807.
Roe, J. N., et al., "Bloodless Glucose Measurements", Critical Review in Therapeutic Drug Carrier Systems, vol. 15, Issue 3, 1998, pp. 199–241.
Sachlos et al. Making Tissue Engineering Scaffolds Work. Review on the Application of Solid Freeform Fabrication Technology to the Production of Tissue Engineering Scaffolds, European Cells and Materials vol. 5, 2003 (29–40).
Sacks, ed., "Guidelines and Recommendations for Laboratory Analysis in the Diagnosis and Management of Diabetes Mellitus," (2002) in "Lab. Med. Practice Guidelines," vol. 13, pub. by Nat. Acad. Clin. Biochem.
Sakakida et al., "Development of Ferrocene–Mediated Needle–Type Glucose Sensor as a Measure of True Subcutaneous Tissue Glucose Concentrations," Artif. Organs Today; vol. 2, p. 145–158 (1992).
Sakakida, M., et al., "Development of Ferrocene–Mediated Needle–Type Glucose Sensor as a Measure of True Subcutaneous Tissue Glucose Concentrations", Artificial Organs Today, vol. 2, No. 2, 1992, pp. 145–158.

Sakakida, M., et al., "Ferrocene–Mediated Needle–Type Glucose Sensor Covered with Newly Designed Biocompatible Membrane", Sensors and Actuators B, vol. 13–14, 1993, pp. 319–322.

Salehi, C., et al., "A Telemetry–Instrumentation System for Long–Term Implantable Glucose and Oxygen Sensors", Analytical Letters, vol. 29, No. 13, 1996, pp. 2289–2308.

Samuels, G. J., et al., "An Electrode–Supported Oxidation Catalyst Based on Ruthenium (IV). pH 'Encapsulation' in a Polymer Film", Journal of the American Chemical Society, vol. 103, No. 2, 1981, pp. 307–312.

Sanders, et al. Fibrous Encapsulation of Single Polymer Microfibers Depends on their Vertical Dimension in subcutaneous Tissue, Polymer Microfibers (2003) pp. 1181–1187.

Sansen, W., et al., "A Smart Sensor for the Voltammetric Measurement of Oxygen or Glucose Concentration", Sensors and Actuators B1, 1990, pp. 298–302.

Sansen, W., et al., "Chapter 12: Glucose Sensor with Telemetry System", Implantable Sensors for Closed–Loop Prosthetic Systems, 1985, pp. 167–175.

Sasso, S. V., et al., "Electropolymerized 1,2–Diaminobenzone as a Means to Prevent Interferences and Fouling and to Stabilize Immobilized Enzyme in Electrochemical Biosensors", Analytical Chemistry, vol. 62, No. 11, 1990, pp. 1111–1117.

Scheller et al., "Second Generation Biosensors," Biosens Bioelectron. 1991;6(3):245–53.

Scheller, F., et al., "Enzyme Electrodes and Their Application", Philosophical Transactions of The Royal Society of London B, vol. 316, 1987, pp. 85–94.

Schichiri, et al., 1985, "Needle–Type Glucose Sensor For Wearable Artificial Endocrine Pancreas," Implantable Sensors for Closed–Loop Prosthetic Systems, Chapter 15: p. 197–210.

Schichiri, et al., 1986, "Telementry Glucose Monitoring Device With Needle–Type Glucose Sensor: A Useful Tool For Blood Glucose Monitoring In Diabetic Individuals," Diabetes Care, vol. 9, No. 3: p. 298–301.

Schmehl, R. H., et al., "The Effect of Redox Site Concentration on the Rate of Mediated Oxidation of Solution Substrates by a Redox Copolymer Film", Journal of ElectroAnalytical Chemistry, vol. 152, 1983, pp. 97–109.

Schmidt, F.J., et al., "Glucose Concentration in Subcutaneous Extracellular Space", Diabetes Care, vol. 16, No. 5, 1993, pp. 695–700.

Schmidt, F.J. et al., "Calibration of a Wearable Glucose Sensor", The International Journal of Artificial Organs, vol. 15, No. 1, pp. 55–61 (1992).

Schmidtke, D. W., et al., "Accuracy of the One–Point In Vivo Calibration of 'Wired' Glucose Oxidase Electrodes Implanted in Jugular Veins of Rats in Periods of Rapid Rise and Decline of the Glucose Concentration", Analytical Chemistry, vol. 70, No. 10, 1998, pp. 2149–2155.

Schmidtke, D. W., et al., "Measurement and Modeling of the Transient Difference Between Blood and Subcutaneous Glucose Concentrations in the Rat After Injection of Insulin", Proceedings of the National Academy of Sciences, vol. 95, 1998, pp. 294–299.

Schoemaker, M., et al., "The SCHM1 System: Subcutaneous Continuous Glucose Monitoring Based on Microdialysis Technique", Diabetes Technology & Therapeutics, vol. 5, No. 4, 2003, pp. 599–608.

Schuler, R.; Wittkampf, M.; Chemniti , G. C. Modified gas–permeable silicone rubber membranes for covalent immobilisation of enzymes and their use in biosensor development. Analyst 1999, 124, 1181–1184.

Schwarz, M., et al., "Micro Implantable Visual Prostheses", 1st Annual International IEEE–EMBS Special Topic Conference on Microtechnologies in Medicine & Biology, Lyon, France, 2000, pp. 461–465.

Selam, J. L., "Management of Diabetes with Glucose Sensors and Implantable Insulin Pumps: From the Dream of the 60s to the Realities of the 90s", American Society for Artificial Internal Organs Journal, 1997, pp. 137–142.

Service, R. F., "Can Sensors Make a Home in the Body?", Science, vol. 297, 2002, pp. 962–963.

Sesen, et al. "Glucose sensor with telemetry system," Ko, W. H. (Ed.). Implantable Sensors for Closed Loop Prosthetic Systems, Ch. 12, 167–175, Futura Publishing Co. (1985).

Shaw et al., "In vitro testing of a simply constructed, highly stable glucose sensor suitable for implantation in diabetic patients," Biosensors & Bioelectronics, (1991) 6:401–406.

Shichiri et al. "In Vivo Characteristics of Needle–Type Glucose Sensor—Measurements of Subcutaneous Glucose Concentrations in Human Volunteers," Horm. Metab. Res. Suppl., 20:17–20 (1988).

Shichiri et al., "Membrane Design for Extending the Long–Life of an Implantable Glucose Sensor,:" Diab. Nutr. Metab., 2, 309–313, 1989.

Shichiri et al., "Wearable Artificial Endocrine Pancreas with Needle–Type Glucose Sensor," The Lancet, 1129–1131 (1982).

Shichiri et al., "Telemetry Glucose Monitoring Device With Needle–Type Glucose Sensor: A Useful Tool for Blood Glucose Monitoring in Diabetic Individuals," Diabetes Care, vol. 9, No. 3, May–Jun. 1996, 298–301.

Shichiri, M., et al., "Needle–type Glucose Sensor for Wearable Artificial Endocrine Pancreas", Implantable Sensors for Closed–Loop Prosthetic Systems, Chapter 15, 1985, pp. 197–210.

Shults, et al., 1994, "A Telemetry–Instrumentation System for Monitoring Multiple Subcutaneously Implanted Glucose Sensors," IEE Transactions On Biomedical Engineering, vol. 14, No. 10: p. 937–942.

Sieminski, A. L., et al., "Biomaterial–Microvasculature Interactions", Biomaterials, vol. 21, 2000, pp. 2233–2241.

Sittampalam, G., et al., "Surface–Modified Electrochemical Detector for Liquid Chromatography", Analytical Chemistry, vol. 55, No. 9, 1983, pp. 1608–1610.

Skoog & West, "Fundamentals of Analytical Chemistry," Holt, Rinehart & Winston, Inc. New York (1966), p. 55.

Skoog, D. A., et al., "Evaluation of Analytical Data," Fundamentals of Analytical Chemistry, 1966, pp. 55.

Skyler, J. S., "The Economic Burden of Diabetes and the Benefits of Improved Glycemic Control: The Potential Role of a Continuous Glucose Monitoring System", Diabetes Technology & Therapeutics, vol. 2, Sup. 1, 2000, pp. S7–S12.

Soegijoko, S., et al., "External Artificial Pancreas: A New Control Unit Using Microprocessor", Hormone and Metabolic Research Supplement Series, vol. 12, 1982, pp. 165–169.

Sokol et al. 1980, Immobilized–enzyme rate–determination method for glucose analysis, Clin. Chem. 26(1):89–92.

Sokolov, S., et al., "Metrological Opportunities of the Dynamic Mode of Operating an Enzyme Amperometric Biosensor", Medical Engineering and Physics, vol. 17, No. 6, 1995, pp. 471–476.
Sproule, B. A., et al., "Fuzzy Pharmacology: Theory and Applications", Trends in Pharmacological Sciences vol. 23, No. 9, 2002, pp. 412–417.
Sprules, S. D., et al., "Evaluation of a New Disposable Screen–Printed Sensor Strip for the Measurement of NAHD and Its Modification to Produce a Lactate Biosensor Employing Microliter Volumes", Electroanalysis, vol. 8, No. 6, 1996, pp. 539–543.
Sriyudthsak, M., et al., "Enzyme–Epoxy Membrane Based Glucose Analyzing System and Medical Applications", Biosensors & Bioelectronics, vol. 11, No. 8, 1996, pp. 735–742.
Steil, G. M., et al., "Determination of Plasma Glucose During Rapid Glucose Excursions with a Subcutaneous Glucose Sensor", Diabetes Technology & Therapeutics, vol. 5, No. 1, 2003, pp. 27–31.
Sternberg, F., et al., "Calibration Problems of Subcutaneous Glusensors when Applied 'In–Situ' in Man", Hormone and Metabolic Research, vol. 26, 1994, pp. 523–526.
Sternberg, F., et al., "Does Fall In Tissue Glucose Precede Fall In Blood Glucose?" Diabetologia. vol. 29, 1996, pp. 609–612.
Sternberg, R., et al., "Covalent Enzyme Coupling on Cellose Acetate Membranes for Glucose Sensor Development", Analytical Chemistry, vol. 60, No. 24, 1988, pp. 2781–2786.
Sternberg, R., et al., "Study and Development of Multilayer Needle–Type Enzyme–Based Glucose Microsensors", Biosensors, vol. 4, 1988, pp. 27–40.
Stokes, "Polyether Polyurethane: Biostable or Not?," J. Biomat. Appl. 3:228–259 (1988).
Street, J. O., et al., "A Note on Computing Robust Regression Estimates Via Interactively Reweighted Least Squares", The American Statistician, vol. 42, 1988, pp. 152–154.
Suaning, G. J., et al., "CMOS Neurostimulation ASIC with 100 Channels, Scaleable Output, and Bidirectional Radio–Frequency Telemetry" IEEE Transactions on Biomedical Engineering, vol. 48, No. 2, 201, pp. 248–260.
Suekane, M., "Immobilization of Glucose Isomerase", Zettschrift fur Allgemeine Mikrobiologie, vol. 22, No. 8, 1982, pp. 565–576.
Summary of Examiner Interview for U.S. Appl. No. 10/783,675 filed Feb. 16, 2004, mailed Apr. 13, 2009.
Summary of Examiner Interview for U.S. Appl. No. 10/783,675 filed Feb. 16, 2004, mailed Apr. 14, 2009.
Summary of Examiner Interview for U.S. Appl. No. 11/928,968 filed Oct. 30, 2007, mailed Mar. 18, 2009.
Tajima, S., et al., "Simultaneous Determination of Glucose and 1,5–Anydroglucitol", Chemical Abstracts, vol. 111, No. 25, 1989, pp. 394.
Takamura et al., Drug Release from Ploy(Viny Alcohol) Gel Prepared by Freeze–Thaw Procedure, J Controlled Release, 20(1992) 21–28.
Tamura, T., et al., "Preliminary Study of Continuous Glucose Monitoring with a Microdialysis Technique and a Null Method—a Numerical Anaysis", Frontiers Medical and Biological Engineering, vol. 10, No. 2, 2000, pp. 147–156.
Tanenberg, R. J., et al., "Continuous Glucose Monitoring System: A New Approach to the Diagnosis of Diabetic Gastroparesis", Diabetes Technology & Therapeutics, vol. 2, Sup. 1, 2000, pp. S73–S80.
Tang, L., et al., "Fibrin(ogen) Mediates Acute Inflammatory Responses to Biomaterials", Journal of Experimental Medicine, vol. 178, 1993, pp. 2147–2156.
Tang, L., et al., "Inflammatory Responses to Biomaterials", American Journal of Clinical Pathology, vol. 103, No. 4, 1995, pp. 466–471.
Tang, L., et al., "Mast Cells Mediate Acute Inflammatory Responses to Implanted Biomaterials", Proceedings of the National Academy of Sciences USA, vol. 95, 1998, pp. 8841–8846.
Tang, L., et al., "Molecular Determinants of Acute Inflammatory Responses to Biomaterials", Journal of Clinical Investigation, vol. 97, No. 5, 1996, pp. 1329–1334.
Tang, Z., et al., "Data Transmission from an Implantable Biotelemeter by Load–Shift Keying Using Circuit Configuration Modulator", IEEE Transactions on Biomedical Engineering, vol. 42, No. 5, 1995, pp. 524–528.
Tarasevich, M. R., "Bioelectrocatalysis", Comprehensive Treatise of Electrochemistry, vol. 10, 1985, pp. 231–295.
Tatsuma, T., et al., "Enzyme Monolayer—and Bilayer–Modified Tin Oxide Electrodes for the Determination of Hydrogen Peroxide and Glucose", Anayltical Chemistry, vol. 61, No. 21, 1989, pp. 2352–5355.
Taylor, C., et al., "'Wiring' of Glucose Oxidase Within a Hydrogel Made with Polyvinyl Imidazole Complexed with [(Os–4,4'–dimethoxy–2,2'–bipyridine)Cl]+/2+", Journal of ElectroAnaytical Chemistry, vol. 396, 1995, pp. 511–515.
The term "acceleration", Merriam–Webster Online Dictionary—at the web—http://www.m–w.com.
The term "impending", Oxford English Dictionary Onlin-e—at the wem—http://www.oed.com.
The term "nominal", Merriam–Webster Online Dictionary—at the web—http://www.m–w.com, p. 1.
The term "system", Merriam–Webster Online Dictionary—at the web—http://www.m–w.com.
Thome–Duret, V., et al., "Continuous Glucose Monitoring in the Free–Moving Rat", Metabolism, vol. 47, No. 7, 1998, pp. 799–803.
Thome–Duret, V., et al., "Monitoring of the Sensitivity of Glucose Sensor Implanted into Subcutaneous Tissue", Diabetes & Metabolism, vol. 22, No. 3, 1996, pp. 174–178.
Thompson et al., 1986, "In Vivo Probes; Problems And Perspectives," Clinical Biochemistry, vol. 19: p. 255–261.
Tibell, A. et al., "Survival of Macrooencapsulated Allogenetic Parathroid Tissue One Year After Transplantation in Nonimmunosupressed Humans", Cell Transplantation, vol. 10, No. 7, 2001, pp. 591–599.
Tierney, M. J., "The Gluco Watch® Biographer: A Frequent, Automatic and Nonivasive Glucose Monitoring", Annals of Medicine, vol. 32, 2000, pp. 632–641.
Tierney, M. J., et al., "Effect of Acetaminophen the Accuracy of Glucose Measurements Obtained with the Gluco Watch Biographer", Diabetes Technology & Therapeutics, vol. 2, No. 2, 2000, pp. 199–207.
Tilbury, J. B., et al., "Receiver Operating Characteristic Analysis for Intelligent Medical Systems—A New Approach for Finding Confidence Intervals", IEEE Transactions on Biomedical Engineering, vol. 47, No. 7, 2000, pp. 952–963.
Trajanoski, Z., et al., "Neural Predictive Controller for Insulin Delivery Using the Subcutaneous Route", IEEE Transactions on Biomedical Engineering, vol. 45, No. 9, 1998, pp. 1122–1134.

Trecroci, D., "A Glimpse Into the Future: Continuous Monitoring of Glucose with a Microfiber", Diabetes Interview, 2002, pp. 42–43.
Trojanowicz, M., et al., "Enzyme Entrapped Polypyrrole Modified Electrode for Flow–Injection Determination of Glucose", Biosensors & Bioelectronics, vol. 5, 1990, pp. 149–156.
Tsalikian, E., et al., "Accuracy of the Gluco Watch G2® Biographer and the Continuous Glucose Monitoring System During Hypoglycemia: Experience of the Diabetes Research in Children Network", Diabetes Care, vol. 27, No. 3, 2004, pp. 722–726.
Tse and Gough, "Time–Dependent Inactivation of Immobilized Glucose Oxidase and Catalase," Biotechnol. Bioeng. 29:705–713 (1987).
Turner, A., et al., "Diabetes Mellitus: Biosensors for Research and Management", Biosensors, vol. 1, 1985, pp. 85–115.
Turner, R. F., et al., "A Biocompatible Enzyme Electrode for Continuous in vivo Glucose Monitoring in Whole Blood", Sensors and Actuators B, vol. 1, 1990, pp. 561–564.
Tushi, P., et al., "Constant Potential Pretreatment of Carbon Fiber Electrodes for In Vivo Electrochemistry", Analytical Letters, vol. 24, No. 6, 1991, pp. 935–945.
U.S. Department of Health and Human Services, "Off–The–Shelf–Software use in Medical Devices", Guidance for Industry, FDA Reviewers and Compliance on, 1999, pp. 1–26.
U.S. Appl. No. 12/109,049, Say, et al., filed Apr. 24, 2008.
U.S. Appl. No. 12/113,907, Say, et al., filed May 1, 2008.
U.S. Appl. No. 12/135,937, Say, et al., filed Jun. 9, 2008.
U.S. Appl. No. 12/197,200, Say, et al., filed Aug. 22, 2008.
U.S. Appl. No. 12/202,169, Say, et al., filed Aug. 29, 2008.
U.S. Appl. No. 12/205,740, Say, et al., filed Sep. 5, 2008.
U.S. Appl. No. 12/205,779, Say, et al., filed Sep. 5, 2008.
U.S. Appl. No. 12/205,798, Say, et al., filed Sep. 5, 2008.
U.S. Patent Reexamination Application No. 90/008,172, Request for Reexamination of U.S. Patent No. 6,990,366, filed Aug. 16, 2006.
U.S. Patent Reexamination Application No. 90/008,665, Request for Reexamination of U.S. Patent No. 6,284,478, filed May 25, 2007.
U.S. Patent Reexamination Application No. 90/008,909, Request for Reexamination of U.S. Patent No. 5,899,855, filed Dec. 11, 2007
Umana, M., "Protein–Modified Electrochemically Active Biomaterial Surface", U.S. Army Research Office, Analytical and Chemical Sciences Research Triangle Institute, 1988, pp. 1–9.
Updike et al. 1988. Laboratory Evaluation of New Reusable Blood Glucose Sensor. Diabetes Care 11:801–807.
Updike, et al., 1997, "Principles Of Long–Term Fully Implanted Sensors With Emphasis On Radiotelmetric Monitoring Of Blood Glucose Form Inside A Subcutaneous Foreign Body Capsule (FBC)," Biosensors In The Body: Continuous In Vivo Monitoring, Chapter 4: p. 117–137.
Updike, S. J., et al., "A Subcutaneous Glucose Sensor with Improved Longevity, Dynamic Range, and Stability of Calibration", Diabetes Care, vol. 23, No. 2, 2000, pp. 208–214.
Updike, S. J., et al., "Continuous Glucose Monitor Based on an Immobilized Enzyme Electrode Detector", The Journal of Laboratory and Clinical Medicine, vol. 23, No. 4, 1979, pp. 518–527.
Updike, S. J., et al., "Enzymatic Glucose Snesors: Improved Long–Term Performance In Vivo and In Vivo", American Society for Artificial Internal Organs Journal, 1994, pp. 157–163.
Updike, S. J., et al., "Implantation the Glucose Enzyme Electrode: Problems, Progress, and Alternative Solutions", Diabetes Care, vol. 5, No. 3, 1982, pp. 207–212.
Updike, S. J., et al., "The Enzyme Electrode", Nature, vol. 214, 1967, pp. 986–988.
Urban, G., et al., "Miniaturized Thin–Film Biosensors Using Covalently Immobilized Glucose Oxidase", Biosensors & Bioelectronics, vol. 6, 1991, pp. 555–562.
U.S. Appl. No. 12/210,122 filed Sep. 12, 2008 to James Say, et al.
U.S. Appl. No. 12/245,618 filed Oct. 3, 2008 to James Say, et al.
U.S. Appl. No. 12/249,644 filed Oct. 10, 2008 to James Say, et al.
U.S. Appl. No. 12/249,879 filed Oct. 10, 2008 to James Say, et al.
Valdes, T. I., et al., "In Vitro and In Vivo Degradation of Glucose Oxidase Enzyme Used for an Implantable Glucose Biosensor", Diabetes Technology & Therapeutics, vol. 2, No. 3, 2000, pp. 367–376.
Van den Berghe 2004. Tight blood glucose control with insulin in "real–life" intensive care. mayo Clin Proc 79(8):977–978.
Varalli, et al., 2003, "A Microdialysis Technique for Continuous Subcutaneous Glucose Monitoring in Diabetic Patients (Part 2)," Biosensors & Bioelectronics, vol. 18: p. 899–905.
Velho, et al., 1989, "Strategies For Calibrating A Subcutaneous Glucose Sensor," Biomed.Biochim. Acia, vol. 28, No. 11/12: p. 957–964.
Velho, G., et al., "In Vitro and In Vivo Stability of Electrode Potentials in Needle–Type Glucose Sensors", Diabetes, vol. 38, No. 2, 1989, pp. 164–171.
Von Woedtke, T., et al., "In Situ Calibration of Implanted Electrochemical Glucose Sensors", Biomedica Biochimica Acta, vol. 48, 1989, pp. 943–952.
Vreeke, M. S., et al., "Hydrogen Peroxide Electrodes Based on Electrical Connection of Redox Centers of Various Peroxidases to Electrodes through a Three–Dimentional Eelctron–Relaying Polymer Network", Diagnostic Biosensors Polymers, Chapter 15, 1993, pp. 180–193.
Vreeke, M., et al., "Hydrogen Peroxide and βNicotinamide Adenine Dinucleotide Sensing Amperometric Electrodes Based on Electrical Connection of Horseradish Peroxidase Redox Centers to Electrodes through a Three–Dimentsional Electron Relaying Polymer Network", Analytical Chemistry, vol. 64, No. 24, 1992, pp. 3084–3090.
Wade Jr., L. G., "Chapter 17: Reactions of Aromatic Compounds", Organic Chemistry, Sixth Edition, 2006, pp. 762–763.
Wagner, J. G., et al., "Continuous Amperometric Monitoring of Glucose in a Brittle Diabetic Chimpanzee with a Miniature Subcutaneous Electrode", Proceedings of the National Academy of Sciences USA, 1998, pp. 6379–6382.
Wang, D. L., et al., "Miniaturized Flexible Amperometric Lactate Probe" Analytical Chemistry, vol. 65, No. 1993, pp. 106–1073.
Wang, J., et al., "Activation of Glassy Carbon Electrodes by Alternating Current Electrochemical Treatment", Analytica Chimica Acta, vol. 167, 1985, pp. 325–334.

Wang, J., et al., "Amperometric Biosensing of Organic Peroxide with Peroxidase–Modified Electrodes", Analytica Chimica Acta, vol. 254, 1991, pp. 81–88.

Wang, J., et al., "Highly Selective Membrane–Free, Mediator Glucose Biosensor", Analytical Chemistry, vol. 66, No. 21, 1994, pp. 3600–3606.

Wang, J., et al., "Screen–Printable Sol–Gel Enzyme–Containing Carbon Inks", Analytical Chemistry, vol. 68, No. 15, 1996, pp. 2705–2708.

Wang, J., et al., "Sol–Gel–Derived Metal–Dispersed Carbon Composite Amperometric Biosensors", Electroanalysis, vol. 9, No. 1, 1997, pp. 52–55.

Wang, W., et al., "Improved Ruggedness for Membrane–Based Amperometric Sensors Using a Pulsed Amprometric Method", Analytical Chemistry, vol. 69, No. 21, 1997, pp. 4482–4489.

Ward, W. K., et al., "A New Amperometric Glucose Microsensor: In Vitro and Short–term In Vivo Evaluation", Biosensors & Bioelectronics, vol. 17, 2002, pp. 181–189.

Ward, W. K., et al., "Assessment of Chronically Implanted Subcutaneous Glucose Sensors in Dogs: The Effect of Surrounding Fluid Masses", American Society for Artificial Internal Organs Journal, 1999, pp. 555–561.

Ward, W. K., et al., "Rise in Background Current Over Time in a Subcutaneous Glucose Sensor in the Rabbit: Relevance to Calibration and Accuracy", Biosensors & Bioelectronics, vol. 15, 2000, pp. 53–61.

Ward, W. K., et al., "Understanding Spontaneous Output Fluctuations of an Amperometric Glucose Sensor: Effect of Inhalation Anesthesia and Use of a Nonenzyme Containing Electrode", American Society for Artifical Internal Organs Journal, 2000, pp. 540–546.

Wientjes, K. J. C., Development of a Glucose Sensor for Diabetic Patients, 2000, pp. vii–xiii.

Wiley Electrical and Electronic Engineering Dictionary, John Wiley & Sons, Inc. (2004), pp. 141, 142, 548, 549.

Wilkins, E., et al., "Glucose Monitoring: State of the Art and Future Possibilities", Medical Engineering and Physics, vol. 18, No. 4, 1995, pp. 273–288.

Wilkins, E., et al., "Integrated Implantable Device for Long–Term Glucose Monitoring", Biosensors & Bioelectronics, vol. 10, 1995, pp. 485–494.

Williams, D. L., et al., "Electrochemical–Enzymatic Analysis of Blood Glucose and Lactate", Analytical Chemistry, vol. 42, No. 1, 1970, pp. 118–121.

Wilson, et al., 1992, "Progress Toward The Development Of An Implantable Sensor for Glucose," Clinical Chemistry, vol. 38, No. 9: p. 1613–1617.

Wilson, G. S., et al., "Enzyme–Based Biosensors for In Vivo Measurements", Chemical Reviews, vol. 100, No. 7, 2000, pp. 2693–2704.

Wilson, G. S., et al., "Progress Toward the Development of an Implantable Sensor for Glucose", Clinical Chemistry, vol. 38, No. 9, 1992, pp. 1613–1617.

Wood, W. D., et al., "Hermetic Sealing with Epoxy", Mechanical Engineering, 1990, pp. 46–48.

Woodward, "How Fibroblast and Giant Cells Encapsulate Implants: Considerations in Design of Gluose Sensor," Diabetes Care 5:278–281 (1982).

Wu, H., et al., "In Situ Electrochemical Oxygen Generation with an Immunoisolation Device", Annals of the new York Academy of Sciences, vol. 875, 1999, pp. 105–125.

Yabuki, S., et al., "Electro–Conductive Enzyme–Membrane", Journal of the Chemical Society, Chemical Communications, 1989, pp. 945–946.

Yang et al., "A comparison of physical properties and fuel cell performance of Nafion and zirconium phosphate/Nafion composite membranes," Journal for Membrane Science 237 (2004) 145–161.

Yang, C., et al., "Comparison of Physical Properties and Fuel Cell Perfomance of Nafion and Zirconium Phosphate/Nafion Composite Membranes," Journal of Membranes Science, vol. 237, 2004, pp. 145–161.

Yang, L., et al., "Determination of Oxidase Enzyme Substrates Using Cross–Flow Thin–Layer Amperometry", Electroanalysis, vol. 8, No. 8–9, 1996, pp. 716–721.

Yang, Q., et al., "Development of Needle–Type Glucose Sensor with High Selectivity", Sensor and Actuators B, vol. 46, 1998, pp. 249–256.

Yao, S. J., et al., "The Interference of Ascorbate and Urea in Low–Potential Electrochemical Glucose Sensing", Proceedings of the Twelfth Annual International Conference of the IEEE Engineering in Medicine and Biology Society, vol. 12, Part 2, 1990, pp. 487–489.

Yao, T., "A Chemically–Modified Enzyme Membrane Electrode as an Amperometric Glucose Sensor", Analytica Chimica Acta, vol. 148, 1983, pp. 27–33.

Ye, L., et al., "High Current Density 'Wired' Quinoprotein Glucose Dehydrogenase Electrode", Analytical Chemistry, vol. 65, No. 3, 1993, pp. 238–241.

Yildiz, A., et al., "Evaluation of an Improved Thin–Layer Electrode", Analytical Chemistry, vol. 40, No. 7, 1968, pp. 1018–1024.

Zamzow, K., et al., "New Wearable Continuous Blood Glucose Monitor (BGM) and Artificial Pancreas (AP)", Diabetes, vol. 39, 1990, pp. 5A–20.

Zavalkoff, S. R., et al., "Evaluation of Conventional Blood Glucose Monitoring as an Indicator of Integrated Glucose Values Using a Continuous Subcutaneous Sensor", Diabetes Care, vol. 25, No. 9, 2002, pp. 1603–1606.

Zhang, Y., et al., "Application of Cell Culture Toxicity Tests to the Development of Impantantable Biosensors", Biosensors & Bioelectronics, vol. 6, 1991, pp. 653–661.

Zhang, Y., et al., "Elimination of the Acetaminophen Interference in an Implantable Glucose Sensor", Analytical Chenistry, vol. 66, No. 7, 1994, pp. 1183–1188.

Zhu, J., et al., "Planar Amperometric Glucose Sensor Based on Glucose Oxidase Immobilized by Chitosan Film on Prussian Blue Layer", Sensors, vol. 2, 2002, pp. 127–136.

Primary Examiner—Albert J Gagliardi

(57) **ABSTRACT**

An analyte monitor includes a sensor, a sensor control unit, and a display unit. The sensor has, for example, a substrate, a recessed channel formed in the substrate, and conductive material disposed in the recessed channel to form a working electrode. The sensor control unit typically has a housing adapted for placement on skin and is adapted to receive a portion of an electrochemical sensor. The sensor control unit also includes two or more conductive contacts disposed on the housing and configured for coupling to two or more contact pads on the sensor. A transmitter is disposed in the housing and coupled to the plurality of conductive contacts for transmitting data obtained using the sensor. The display unit has a receiver data transmitted by the transmitter of the sen-

sor control unit and display coupled to the receiver for displaying an indication of a level of an analyte. The analyte monitor may also be part of a drug delivery system to alter the level of the analyte based on the data obtained using the sensor.

At the time of issuance and publication of this certificate, the patent remains subject to pending reexamination control number 90/007,910 filed Feb. 1, 2006. The claim content of the patent may be subsequently revised in the reexamination proceeding.

EX PARTE REEXAMINATION CERTIFICATE ISSUED UNDER 35 U.S.C. 307

NO AMENDMENTS HAVE BEEN MADE TO THE PATENT

AS A RESULT OF REEXAMINATION, IT HAS BEEN DETERMINED THAT:

The patentability of claims **35**, **36**, **52**, **55**, **56**, **57** and **87** is confirmed.

Claims **1-34**, **37-51**, **53-54**, **58-86** and **88-94** were not reexamined.

* * * * *

US006175752C2

(12) EX PARTE REEXAMINATION CERTIFICATE (9849th)

United States Patent
Say et al.

(10) **Number: US 6,175,752 C2**
(45) **Certificate Issued: Sep. 18, 2013**

(54) **ANALYTE MONITORING DEVICE AND METHODS OF USE**

(75) Inventors: **James Say**, Alameda, CA (US); **Michael F. Tomasco**, Cupertino, CA (US); **Adam Heller**, Austin, TX (US); **Yoram Gal**, Kibbutz Yagur (IL); **Ephraim Heller**, Oakland, CA (US); **Phillip John Plante**, Sunnyvale, CA (US); **Mark S. Vreeke**, Alameda, CA (US); **Keith A. Friedman**, Austin, TX (US)

(73) Assignee: **Therasense, Inc.**, Alameda, CA (US)

Reexamination Request:
No. 90/007,910, Feb. 1, 2006

Reexamination Certificate for:

Patent No.:	**6,175,752**
Issued:	**Jan. 16, 2001**
Appl. No.:	**09/070,677**
Filed:	**Apr. 30, 1998**

Reexamination Certificate C1 6,175,752 issued Dec. 14, 2010

Certificate of Correction issued Sep. 25, 2001
Certificate of Correction issued Jul. 26, 2011

(51) **Int. Cl.**

A61B 5/00	(2006.01)
A61B 5/145	(2006.01)
A61B 5/1486	(2006.01)
A61B 5/1473	(2006.01)
H01L 23/31	(2006.01)
H01L 23/495	(2006.01)

(52) **U.S. Cl.**
CPC ***A61B 5/14532*** (2013.01); *A61B 5/14546* (2013.01); *A61B 5/1486* (2013.01); *A61B 5/7445* (2013.01); *A61B 5/0002* (2013.01); *A61B 5/1473* (2013.01); *A61B 2560/0252* (2013.01); *H01L 23/3107* (2013.01); *H01L 23/49548* (2013.01); *H01L 2924/19041* (2013.01); *H01L 2924/3011* (2013.01); *Y10S 128/903* (2013.01)
USPC **600/345**; 600/365; 128/903

(58) **Field of Classification Search**
USPC 600/365, 345, 347; 250/200
See application file for complete search history.

(56) **References Cited**

To view the complete listing of prior art documents cited during the proceeding for Reexamination Control Number 90/007,910, please refer to the USPTO's public Patent Application Information Retrieval (PAIR) system under the Display References tab.

Primary Examiner — Albert J Gagliardi

(57) **ABSTRACT**

An analyte monitor includes a sensor, a sensor control unit, and a display unit. The sensor has, for example, a substrate, a recessed channel formed in the substrate, and conductive material disposed in the recessed channel to form a working electrode. The sensor control unit typically has a housing adapted for placement on skin and is adapted to receive a portion of an electrochemical sensor. The sensor control unit also includes two or more conductive contacts disposed on the housing and configured for coupling to two or more contact pads on the sensor. A transmitter is disposed in the housing and coupled to the plurality of conductive contacts for transmitting data obtained using the sensor. The display unit has a receiver data transmitted by the transmitter of the sensor control unit and display coupled to the receiver for displaying an indication of a level of an analyte. The analyte monitor may also be part of a drug delivery system to alter the level of the analyte based on the data obtained using the sensor.

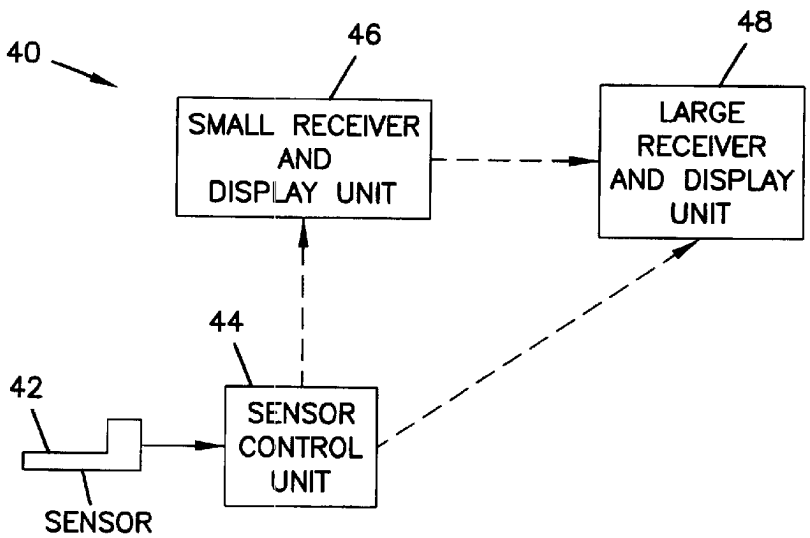

EX PARTE REEXAMINATION CERTIFICATE ISSUED UNDER 35 U.S.C. 307

THE PATENT IS HEREBY AMENDED AS INDICATED BELOW.

Matter enclosed in heavy brackets [ ] appeared in the patent, but has been deleted and is no longer a part of the patent; matter printed in italics indicates additions made to the patent.

AS A RESULT OF REEXAMINATION, IT HAS BEEN DETERMINED THAT:

The patentability of claims **1-32**, **34-35**, **38-46**, **49-51**, **53**, **54**, **58-65**, **74-86**, **88-90** and **92-94** is confirmed.

Claim **33** is determined to be patentable as amended.

New claims **95-113** are added and determined to be patentable.

Claims **36**, **37**, **47**, **48**, **52**, **55-57**, **66-73**, **87** and **91** were not reexamined.

33. A sensor assembly, comprising:

a sensor comprising a flexible substrate with at least one working electrode, at least one counter electrode, and at least one contact pad coupled to each of the working and counter electrodes, the sensor being adapted for implantation of a portion of the sensor comprising the working and counter electrodes through skin; and

a sensor control unit comprising

a housing adapted for placement on skin *and adapted to receive a portion of an electrochemical sensor extending out of the skin*;

a plurality of conductive contacts disposed on the housing and configured for coupling to the contact pads of the sensor; and

an rf transmitter disposed in the housing and coupled to the plurality of conductive contacts for transmitting data obtained using the sensor.

95. The sensor control unit of claim 1, wherein the sensor is removable from the housing.

96. The sensor control unit of claim 1, wherein the sensor control unit is adapted for placement substantially over an insertion site of the sensor.

97. The sensor control unit of claim 1, wherein the rf transmitter is adapted to transmit a code which identifies the sensor control unit.

98. The sensor assembly of claim 32, wherein the sensor is removable from the housing.

99. The sensor assembly of claim 32, wherein the sensor control unit is adapted for placement substantially over an insertion site of the sensor.

100. The sensor control unit of claim 32, wherein the sensor control unit further comprises and rf transmitter for transmitting data obtained using the sensor, and wherein the rf transmitter is adapted to transmit a code which identifies the sensor control unit.

101. The sensor assembly of claim 33, wherein the sensor is removable from the housing.

102. The sensor assembly of claim 33, wherein the sensor control unit is adapted for placement substantially over an insertion site of the sensor.

103. The sensor assembly of claim 33, wherein the rf transmitter is adapted to transmit a code which identifies the sensor control unit.

104. The analyte monitoring system of claim 88, wherein the sensor is removable from the housing.

105. The analyte monitoring system of claim 88, wherein the sensor control unit is adapted for placement substantially over an insertion site of the sensor.

106. The analyte monitoring system of claim 88, wherein the rf transmitter is adapted to transmit a code which identifies the sensor control unit.

107. The sensor control unit of claim 89, wherein the sensor is removable from the housing.

108. The sensor control unit of claim 89, wherein the sensor control unit is adapted for placement substantially over an insertion site of the sensor.

109. The sensor control unit of claim 89, wherein the rf transmitter is adapted to transmit a code which identifies the sensor control unit.

110. A sensor control unit comprising:

a housing adapted for placement on skin and adapted to receive a portion of an electrochemical sensor extending out of the skin having at least two non coplanar electrodes, and a plurality of contact pads;

a plurality of conductive contacts disposed on the housing and configured for coupling to the plurality of contact pads on the electrochemical sensor; and

an rf transmitter disposed in the housing and coupled to the plurality of conductive contacts for transmitting data obtained using the electrochemical sensor.

111. A sensor control unit comprising:

a housing comprising electronics disposed in the housing, adapted for placement on skin and adapted to receive a portion of a flexible electrochemical sensor extending out of the skin at a sensor insertion site of the skin having a plurality of contact pads;

a plurality of conductive contacts disposed on the housing and configured for coupling to the plurality of contact pads on the electrochemical sensor; and

an rf transmitter disposed in the housing and coupled to the plurality of conductive contacts for transmitting data obtained using the electrochemical sensor, wherein at least a portion of the rf transmitter is positioned substantially over the sensor insertion site during rf transmission.

112. A sensor control unit for controlling a sensor and which is mateable with a mounting unit comprising:

a housing adapted for placement on skin and adapted to receive a portion of an electrochemical sensor extending out of the skin having a plurality of contact pads;

a plurality of conductive contacts disposed on the housing and configured for coupling to the plurality of contact pads on the electrochemical sensor; and

an rf transmitter disposed in the housing and coupled to the plurality of conductive contacts for transmitting data obtained using the electrochemical sensor; and

a mounting unit mateable with the housing wherein the housing and the mounting unit are configured so that mating the housing with the mounting unit provides communication between the sensor and the sensor control unit so that the sensor can be controlled by the sensor control unit, the mounting unit comprising an adhesive surface for adhering the mounting unit to the skin so that when adhered to the skin, the mounting unit is configured for placement between the housing and the skin, such that the adhesive retains the housing, the sensor and the rf transmitter in a substantially fixed position.

113. The sensor control unit of claim 112, wherein the housing and the mounting unit include respective complementary, interlocking structures.

* * * * *