TaylorWessing

Taylor Wessing · Isartorplatz 8 · 80331 München

Isartorplatz 8
80331 München
Postfach 20 20 55
80020 München

Tel. +49 89 21038-0
Fax +49 89 21038-300
muenchen@taylorwessing.com

Verzeichnis der Partner unter:
www.taylorwessing.com

Sekretariat +49 89 21038-159
d.kamlah@taylorwessing.com

**Filed electronically (beA):**

Munich District Court I
21st Civil Division
Prielmayerstrasse 7
80335 Munich

We serve directly to the other party.

| Lawyers | Our Reference | Date |
|---|---|---|
| Dr. Dietrich Kamlah<br>Dr. Christian Lederer<br>Dr. Michael Schächinger | 2006593/20 – ABB34.D1000<br>Dok.-Nr.: 36819160 | September 1, 2023 |

# Statement of Defense (Counterclaim)

In the legal dispute of

**Dexcom Inc.**

- Plaintiff -

versus

**Abbott Diabetes Care Inc.**

- Defendant -

**case no.: 21 O 6562/23**,

we reply to the counterclaim.

We shall **move for the court**

**I. to dismiss the counterclaim with costs,**

in the alternative,

DEXCOM
EXHIBIT 1165

TaylorWessing

**II. to stay the proceedings pending a final decision on the action for the revocation of the Patent,**

further in the alternative,

**III. to permit the defendant with a view to motions I.1 and 4 to avoid enforcement until the judgment becomes final by providing a security or deposit, without regard to any security provided by the plaintiff,**

**IV. to declare the judgment provisionally enforceable with a view to motions I.1 and 4 only against the provision of a security in the amount of no less than EUR 500 million.**

## STATEMENT OF GROUNDS

The counterclaim is unfounded. The challenged embodiment does not infringe the patent in suit, since it does not make use of features 2 and 2.3. A claim for injunctive relief would also be excluded due to disproportionality pursuant to Sec. 139 (1), 3rd sentence, Patent Act.

Moreover, the patent-in-suit is not legally valid even on the basis of the plaintiff's interpretation, which is why the proceeding must be stayed. The Patent evidently lacks novelty over the prior art documents (US 2011/0320130 A1 - "*Valdes*" and US 2012/0197098 A1 - "*Donnay*").

For a better overview, we reproduce the following table of contents:

**A. Introduction: the defendant ..... 4**
**B. The action is unfounded ..... 5**
I. Interpretation of the Patent ..... 5
1. Construction of feature 2 ..... 5
2. Construction of feature 2.1 ..... 6
3. Construction of feature 2.2 ..... 6
II. No Patent infringement ..... 10
1. No needle hub configured to apply the sensor assembly to the patient's skin as per feature 2 ..... 10
2. No infringement of feature 2.3 ..... 12
**C. Alternative line of argument: a judgment ordering a prohibitory injunction, product recall and destruction would be disproportionate ..... 12**
I. Chronic diabetes and available measurement systems ..... 15

TaylorWessing

1. Diabetes is a serious, even life-threatening disease with alarming growth rates and a high prevalence in Germany. ..... 15
2. Intensified insulin therapy necessity of diabetes patients to know their exact blood glucose levels and trends ..... 16
3. Measurement of glucose levels in blood by finger pricking is not an adequate monitoring system: Patients with severe diabetes condition depend on CGM systems in order not to harm their health and lives ..... 17
4. Summary: Acute risks for CGM patients when reverting to BGM. ..... 19
5. Other health hazards and long-term risks for ICT patients without CGM ..... 20
II. Sudden conversion of more than half a million patients to a different CGM measurement system such as G6 or G7 within a few months not feasible ..... 20
1. Requirements for a changeover to the G6 or the G7 in general - Logistics and delivery capability ..... 21
2. Switching to plaintiff's products is complex for patients ..... 27
3. Requirements for a conversion to the G6 or G7 in particular - Personal training and care of patients. ..... 27
4. Required period for a changeover: At least one year ..... 33
5. No adequate substitute for the challenged embodiment by other systems ..... 36
6. Incidentally: a judgment ordering a prohibitory injunction would jeopardize patients who need multiple therapy options, since not all CGM systems are equally suitable for all patients. 38
7. Summary: An injunction results in a concrete risk of serious complications and even deaths for a large number of diabetic patients ..... 39
III. Disproportionate additional financial burden on the health care system, especially health insurers ..... 40
IV. Summary ..... 43
V. Reasons for the application pursuant to § 712 ZPO ..... 43
**D. Alternative line of argument: stay of proceedings due to obvious invalidity ..... 43**
I. Lack of novelty over D1 (US 2013/0150691 A1 – “Pace”) ..... 44
1. Lack of novelty based on the embodiment in figures 21A to 21C of D1 ..... 44
2. Lack of novelty based on the embodiment in figures 35 and 47C of D1 ..... 49
3. Prior use in the FreeStyle Libre ..... 55
II. Lack of novelty over D2 (US 2012/0197098 A1 – “Donnay”) ..... 56
III. Lack of inventive step ..... 62
1. Lack of inventive step over D1 ..... 62

TaylorWessing

2. Lack of inventive step over D1 combined with D3 ..... 63
3. Lack of inventive step over D1 combined with D4 ..... 64
**E. In the extreme alternative: ordering an adequate security for enforcement ..... 67**

## A.
## Introduction: the defendant

The defendant is part of the leading international healthcare group Abbott Laboratories ("**Abbott**") headquartered in Abbott Park, Chicago, USA. Abbott employs more than 100,000 people and markets its products in over 160 countries.

Diabetes management has been one of the key research and development areas of the defendant and its predecessors since about 1996. The defendant is a pioneer and market leader in the development of innovative design and manufacturing solutions for continuous glucose monitoring ("**CGM**") systems for patients with diabetes, which are used by more than four and a half million people (patients) in over 60 countries worldwide. The defendant's first CGM system "FreeStyle Navigator" received the CE marking with early clinical results in Germany in 2007. The defendant's advanced "FreeStyle Libre" CGM system was released in Europe in 2014 and in the US in 2017. Continuing to innovate, the defendant built on these life-changing product launches with the "FreeStyle Libre 2" CGM system, which was approved for use in Europe in 2018 and in the United States in 2020, and the "FreeStyle Libre 3" CGM system, which was approved for use in Europe in 2020 and for the US market in 2022. These three later products are referred to herein collectively as "FreeStyle Libre". The defendant invested enormous resources, including more than a billion US dollars, into developing, building and expanding the market for FreeStyle Libre. It is now the most accessible and top-selling CGM system in the world and in October 2022 was awarded the "Prix Galien Golden Jubilee Award" in the category "Best Medical Technology" of the last 50 years by the renowned Galien Foundation in New York (https://www.galienfoundation.org/galien-golden-jubilee).

TaylorWessing

**B.**

**The action is unfounded**

**I.**
**Interpretation of the Patent**

**1. Construction of feature 2**

*"a needle hub, wherein the needle hub is configured to apply the on-skin sensor assembly to a skin of a host, the needle hub comprising:"*

German version:

*„eine Nadelnabe, wobei die Nadelnabe konfiguriert ist, dass sie die auf der Haut befindliche Sensoranordnung auf der Haut eines Patienten ansetzt, wobei die Nadelnabe Folgendes umfasst:"*

As the plaintiff explains correctly on page 14 of the counterclaim, the needle hub of the Patent is coupled with the insertion element and is configured to apply the sensor assembly to the patient's skin. However, the claim does not provide that the needle hub itself serves to insert the sensor under the skin. The Patent description distinguishes between the insertion of the sensor under the skin, which is the main task of the insertion element (see [0302], [0326], [0197]), and the application of the sensor assembly to the patient's skin (see [0199], [0289]). Feature 2 refers to that application process mentioned last.

The Patent claim and the description both leave it open how exactly the needle hub contributes to the application of the sensor assembly to the patient's skin. The important point is that the needle hub is involved in and makes a relevant contribution to the application of the sensor assembly to the skin.

The needle hub's involvement in the application of the sensor assembly to the patient's skin becomes clear in paragraph [0264] of the Patent's description. A first spring is used to apply force to the holder, the needle carrier assembly, the needle hub and the insertion element.

> ***[0264]*** *FIG. 73B illustrates applicator 7100 during insertion of on-skin sensor assembly 360 but before retraction of needle carrier assembly 7108. First spring 7112 drives holder 7124, needle carrier assembly 7108, needle hub 7150, insertion element 7174, and on-skin sensor assembly 360, in the distal direction toward the distal insertion position. FIG. 73B illustrates a position where on-skin sensor assembly 360 is in contact with skin 130 of the host but where holder 7124 is not yet fully driven, by first spring 7112, into contact with on-skin sensor.*

TaylorWessing

German version:

*[0264] FIG. 73B zeigt den Applikator 7100 während des Einführens der auf der Haut anzubringenden Sensoranordnung 360, aber vor dem Zurückziehen der Nadelträgereinheit 7108. Die erste Feder 7112 drückt den Halter 7124, die Nadelträgeranordnung 7108, die Nadelnabe 7150, das Einführelement 7174 und die auf der Haut anzubringenden Sensoranordnung 360 in distaler Richtung zur distalen Einführposition. Fig. 73B zeigt eine Position, in der die auf der Haut anzubringende Sensoranordnung 360 mit der Haut 130 des Trägers in Kontakt ist, der Halter 7124 ist aber noch nicht vollständig durch die erste Feder 7112 in Kontakt mit dem auf der Haut anzubringenden Sensoranordnung gebracht worden.*

## 2. Construction of feature 2.1

*"a base (7172), the base (7172) configured to be at least partially disposed in an aperture (396) of the on-skin sensor assembly (360), wherein the aperture (396) is adapted for sensor and needle insertion,"*

German version:

*„eine Basis (7172), wobei die Basis (7172) so konfiguriert ist, dass sie mindestens teilweise in einer Öffnung (396) der Sensoranordnung für die Anbringung auf der Haut (360) angeordnet ist, wobei die Öffnung (396) zum Einführen des Sensors und der Nadel angepasst ist und"*

In accordance with feature 2.1 of the Patent, the base of the needle hub is configured to be at least partially disposed in an aperture of the on-skin sensor assembly. The Patent does not address the exact arrangement or duration of the disposal of the base in the aperture. Thus, even a merely temporary or fractional disposal of the base of the needle hub in the aperture can be captured by the Patent. In those cases as well, the base is at least partially disposed in the sensor assembly.

## 3. Construction of feature 2.2

*"the base comprising an anti-rotation feature, wherein the anti-rotation feature is configured to prevent rotation of the base (7172) within the aperture (396),"*

German version:

*„wobei die Basis ein Drehsicherungsmerkmal umfasst, wobei das Drehsicherungsmerkmal so konfiguriert ist, eine Drehung der Basis (7172) innerhalb der Öffnung (396) zu verhindern,"*

### a) Statement of function

Feature 2.2 teaches that the base of the needle hub comprises an anti-rotation feature, the anti-rotation feature being configured to prevent rotation of the base within the aperture. The language

"configured to" makes it clear that this is a statement of function, more specifically a statement concerning the anti-rotation function (see also [0291]).

Statements of purpose, effect and function in product patents merely define the claimed device in that it must be adapted to be used for the function and purpose specified in the patent claim (for example, see BGH GRUR 2021, 462, [49] - *Fensterflügel*). As long as the device generally can be used for the stated purpose, it is irrelevant whether or not the device in fact is used as defined by the statement of function (BGH GRUR 2018, 1128, [12] – *Gurtstraffer*). This is subject to an objective test standard and the device therefore has to be (only) objectively suitable to fulfil the stated purpose (BGH GRUR 2018, 1128, [12] – *Gurtstraffer*; BGH, GRUR 2012, 475 [17] – *Elektronenstrahltherapiesystem*). If the statements of purpose, function or effect relate only to a single element of the claimed device, it is relevant only whether that element <u>can</u> fulfil the function in question (BGH GRUR 2006, 923 - *Luftabscheider für Milchsammelanlage*).

Here, feature 2.2 further specifies a single element – the base of the needle hub. The base must comprise a feature which is generally suitable to prevent rotation of the base within the aperture. Thus, what is claimed is a needle hub comprising a base, which must comprise an anti-rotation feature configured to prevent rotation of the base within the aperture. It is irrelevant whether the device as a whole includes a matching complementary element to the anti-rotation feature and whether the anti-rotation feature actually is used in that way. Furthermore, it is irrelevant for the use of the feature whether rotation of the base within the aperture in fact is successfully prevented in the final product.

**b) Design and location of the anti-rotation feature**

Within the language of feature 2, Patent claim 1 differentiates between the needle hub, the base of the needle hub and the anti-rotation feature in or on the base of the needle hub. Above and beyond this linguistic differentiation, however, neither the description nor the drawings specify how exactly the base of the needle hub is delimited from the other parts of the needle hub and where and in which form the anti-rotation feature shall be provided at the needle hub.

For the interpretation of the terminology the plaintiff in particular refers to figure 78:

TaylorWessing

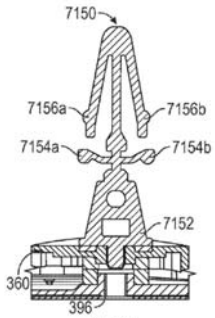

FIG. 78

The needle hub as a whole has the reference numeral 7150 while the base is assigned the reference numeral 7152 pointing to the bottom part of the needle hub. The presence of an anti-rotation feature in or on the base is merely defined as a prerequisite without, however, specifically showing or describing the feature as is evident by certain distinct features being called out by numerals, but no such numeral exists for the anti-rotation feature. That is also why the plaintiff tries to now arbitrarily identify the anti-rotation feature by drawing a circle (see the counterclaim, pages 15 and 17, and the purple circle in the figure below):

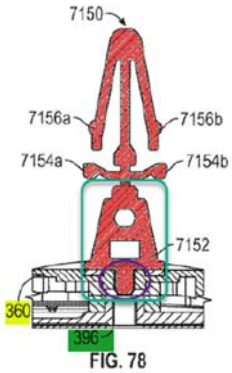

FIG. 78

The figure illustrates a cross-sectional view of the sensor assembly and the needle hub. The circled section shows a small protrusion at the base of the needle hub extending into the sensor assembly. This is where the plaintiff seeks to locate the anti-rotation feature. However, it does not emerge from the figure whether an anti-rotation feature actually is situated at that location. As figure 78 depicts only a cross-sectional view of the needle hub, it is not recognizable whether the shown protrusion extending into the sensor assembly is suitable to prevent rotation of the needle hub. The shown protrusion may just as well be circular in shape and thus not be suitable to act as an anti-rotation feature. Hence, figure 78 does not disclose an anti-rotation feature.

As a result, the Patent does not specify the location where and the manner in which the anti-rotation feature has to be disposed at the base of the needle hub. In particular, the Patent does not provide that the anti-rotation feature must be situated in the aperture of the sensor assembly. On the contrary, the anti-rotation feature may also be disposed outside the aperture, as long as it is objectively capable of preventing rotation of the base within the aperture.

Furthermore, as the Patent does not define how the rotation of the base shall be prevented, the anti-rotation feature may adopt a variety of different forms.

Finally, the Patent makes it clear in [0292] and [0293] that this anti-rotation function does not necessarily have to play a part in the use of the finished product during the application of the sensor assembly to the skin by the user. Instead, it may also serve merely to facilitate assembly of the product during its manufacture and prior to use:

> ***[0292]*** *In some embodiments, base 7152 further comprises a substantially flat surface configured to mate with a top surface of on-skin sensor assembly 360 and maintain insertion element 7174 in a substantially perpendicular orientation to the top surface of on-skin sensor assembly 360, in some cases, when the anti-rotation feature of base 7152 is engaged within sensor assembly aperture 396 of on-skin sensor assembly 360.*
>
> ***[0293]*** *Based at least upon the above-described features of needle hub 7150, on-skin sensor assembly 360, and/or needle carrier assembly 7108, base 7152 allows easy assembly during manufacture, including but not limited to proper alignment and preassembly of insertion element 7174 onto on-skin sensor assembly 360, and/or the ability to easily engage an assembly of needle hub 7150, insertion element 7174, sensor 338 and on-skin sensor assembly 360 to other portions of assembled applicator 7100.*
>
> German version:
>
> *[0292] In einigen Ausführungsformen umfasst die Basis 7152 ferner eine im Wesentlichen flache Oberfläche, die so konfiguriert ist, dass sie mit einer oberen Oberfläche der Sensoranordnung für die Anbringung auf der Haut 360 zusammenpasst und das Einführelement 7174 in einer im Wesentlichen senkrechten Ausrichtung zur oberen Oberfläche der Sensoranordnung für die Anbringung auf der Haut 360 hält, in einigen Fällen, wenn das Drehsicherungsmerkmal der Basis 7152 in der Öffnung der Sensoranordnung 396 der Sensoranordnung für die Anbringung auf der Haut 360 eingreift.*
>
> *[0293] Basierend auf zumindest den oben beschriebenen Merkmalen der Nadelnabe 7150, der auf der Haut anzubringenden Sensoranordnung 360 und/oder der Nadelträgeranordnung 7108 ermöglicht die Basis 7152 eine einfache Montage während der Herstellung, einschließlich, aber nicht beschränkt auf die korrekte Ausrichtung und Vormontage des Einführelements 7174 auf die auf der Haut anzubringenden Sensoranordnung 360 und/oder die Möglichkeit, eine Einheit der Nadelnabe 7150, des Einführelements 7174, des Sensors*

*338 und der auf der Haut anzubringenden Sensoranordnung 360 leicht mit anderen Teilen des zusammengesetzten Applikators 7100 zu verbinden.*

Thus, paragraph [0293] shows that the anti-rotation feature does not actually have to fulfil a function in the final product, nor does it have to be abstractly suitable to do so. Instead, it is sufficient if the feature is designed in a way that permits anti-rotation protection during manufacture or assembly – possibly in interaction with a tool.

## II.
## No Patent infringement

### 1. No needle hub configured to apply the sensor assembly to the patient's skin as per feature 2

The product in dispute does not comprise a needle hub that is configured to apply the sensor assembly to the patient's skin. Therefore, it does not incorporate **feature 2** of the Patent. Contrary to the plaintiff's view, the mere fact that the needle hub is contained in the applicator does not permit one to conclude that the needle hub can contribute to the sensor assembly application process or is suitable at all to support the application of the sensor assembly to the skin (see the counterclaim, page 25).

As discussed in I. 1. b) above, the Patent requires the needle hub to be configured to place of the sensor assembly on the patient's skin. The product in dispute does not meet this requirement.

To allow the sensor assembly to be positioned on the patient's skin, the sensor assembly of the product in dispute has an adhesive adhesive patch on its underside. The adhesive surface of the patch has to be pressed to the patient's skin with a certain level of pressure to securely fasten the patch to the skin. The components that are responsible for this process, and therefore for the application of the sensor assembly to the patient's skin, in particular are the housing and the carrier, as is evident from the below figure showing the components of the sensor applicator:

TaylorWessing

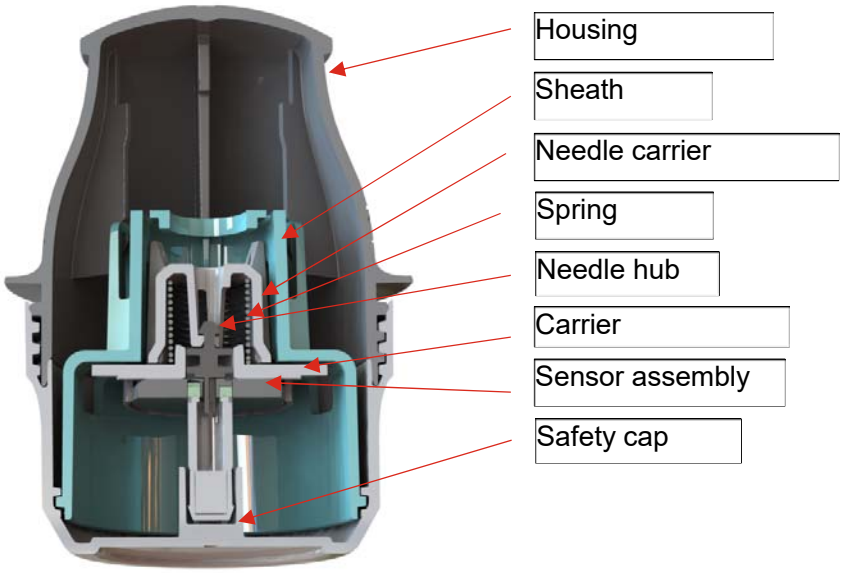


During the process of applying the sensor assembly to the patient's skin, the patient removes the safety cap (light gray above) and presses the sensor applicator firmly to the skin. This exerts pressure on the housing, which thereupon lowers and transfers the force applied to the housing to the carrier. The carrier has a large contact surface with the sensor assembly and therefore is able to pass the pressure on to the sensor assembly. In this way, the sensor assembly with the adhesive patch affixed to its underside is pressed firmly to the patient's skin, which fastens the sensor assembly in place.

The contact surface of the carrier and the sensor assembly further are illustrated by the below figures:

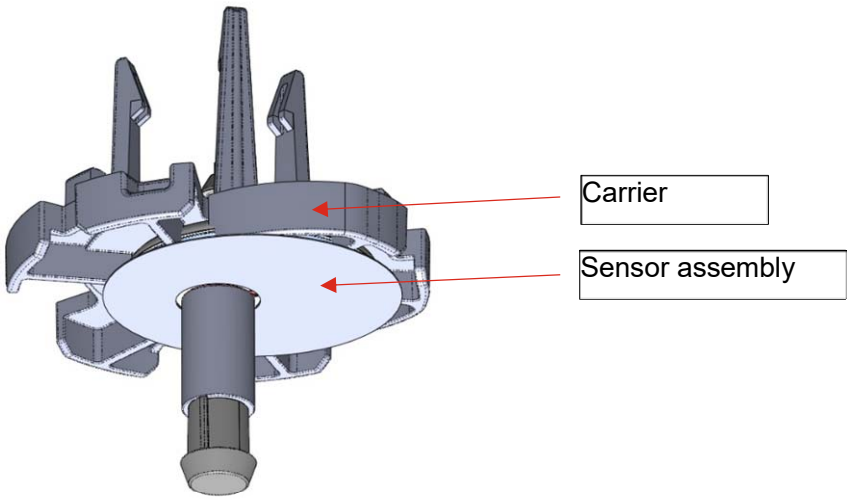

TaylorWessing

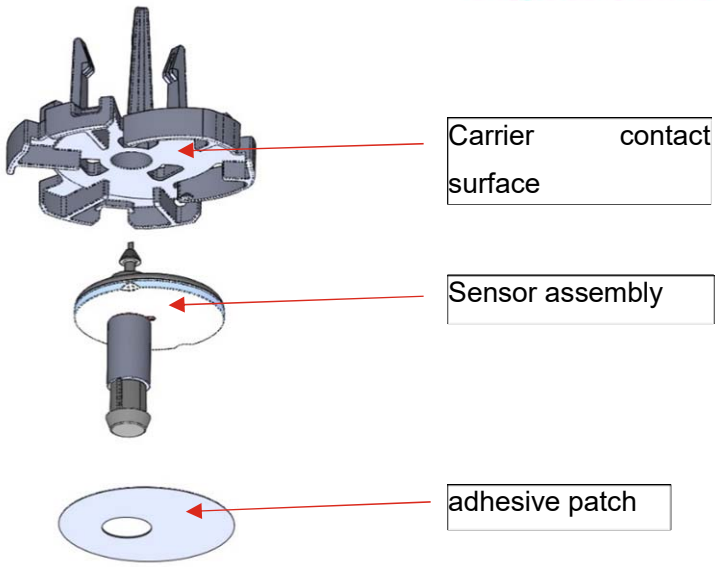


Thus, the needle hub is not involved, nor is it configured to be involved, in the above described application process of the sensor assembly. Instead, it merely rests on a small area of the sensor assembly, and that contact area is much too small to generate sufficient pressure to fasten the adhesive patch to the skin. The product in dispute does not incorporate **feature 2**.

**2. No infringement of feature 2.3**

Addressing the infringement of **feature 2.1**, the plaintiff explains on page 26 of the counterclaim that the needle designed as a hollow needle is adapted to allow the needle and the sensor to be inserted in the patient's skin through the aperture of the sensor assembly. At the same time the plaintiff refers to the same hollow needle in the infringement discussion of **feature 2.3**, identifying it as the insertion element.

However, the claim language makes an express distinction between the needle in **feature 2.1** and the insertion element in **feature 2.3**, which therefore have to be two different elements. Thus, the reference to the same hollow needle is not sufficient to also prove the presence of an insertion element as the hollow needle cannot be two different elements at the same time. The plaintiff's arguments are inconclusive with a view to the infringement of **feature 2.3**.

**C.**
***Alternative line of argument:* a judgment ordering a prohibitory injunction, product recall and destruction would be disproportionate**

Should the Chamber assume the existence of a patent infringement, the claim for injunctive

relief is excluded in any case due to disproportionality, since it would lead to a disproportionate hardship due to the special circumstances of the individual case and the requirements of good faith for third parties, which would not be justified by the - actually non-existing, see above - exclusive right of the plaintiff, Sec. 139 (1), p. 3 Patent Act.

Over half a million diabetes patients in Germany use the challenged medical device of the defendant. This corresponds to a market share of almost 80% in the market of CGM (= continuous glucose measurement) devices in Germany. If the contested medical devices of the defendant were no longer available from one day to the next in the event of an injunction claim being enforced by the plaintiff, over half a million diabetes patients in Germany would suddenly find themselves without a continuous glucose monitor to treat their diabetes - a life-threatening disease that if left untreated, can result in nerve damage, blindness, kidney and heart disease, amputations, coma and even death. In the absence of available alternatives, these patients would thus be relegated to the previously common fingerstick method ("BGM" = blood glucose measurement), which is a clearly inferior method of glucose monitoring and cannot reliably eliminate the abovementioned health risks. This would significantly worsen the glycemic control of patients with severe diabetes who depend on CGM systems and endanger their lives and health.

In particular, these patients could not be supplied with other CGM systems. Suitable replacement devices, in particular the plaintiff's CGM system, would not be available within a reasonable time to the extent necessary to fill the significant gap created by an injunction. A sudden conversion of more than half a million patients to a different CGM measurement system, even assuming adequate production capacity, as would be required in the event of a court injunction, would simply not be possible within a few months.

On the one hand, the plaintiff, which has only about 130,000 customers with its CGM systems in Germany despite several years of investment in the German market, would not be able to supply its own CGM systems to the more than half a million patients who currently use the defendant's CGM devices in the short term, because of a lack of the necessary distribution structures and shipping logistics. The sensor unit of the challenged embodiment must be replaced every 14 days according to the instructions and regulatory requirements. Thus, over 13 million sensor units of the challenged embodiment are required per year. In the case of the plaintiff's systems, the requirement would be even 40% higher, i.e. a total of over 18.5 million, since the sensor unit here must be replaced every ten days according to the instructions and regulatory requirements. There is no evidence that the plaintiff could

somehow meet this immediate and massive new demand in any way within a short period of time. This is also not comprehensible in view of the current worldwide production capacities of the plaintiff. Other third-party suppliers who could step in here do not exist either.

On the other hand, the sudden conversion from the defendant's CGM system to the plaintiff's CGM system, enforced by a court injunction, would constitute a system change. More than half a million customers of the defendant would have to be trained in detail on the new CGM system by their physicians and diabetes advisors and would have an increased need for advice. These mandatory training measures would not be possible within a reasonable period of time under the given general market conditions, but would require a period of at least one year for half a million patients to be switched.

Finally, such a conversion of over half a million patients to the plaintiff's CGM system would represent a disproportionate hardship for the German health care system. In view of the more expensive plaintiff's CGM system, the public health system would be burdened with additional costs in the order of up to 700 million euros per year. In addition, there would be further costs for the necessary training and the significantly higher hospitalization rates for patients who would suffer from hyperglycemia and hypoglycemia in view of such a forced changeover, not to mention the immense administrative burden for the public health system.

In summary, as will be explained in detail below, the injunction sought by the plaintiff thus endangers the lives and health of up to half a million patients with severe diabetes and would impose enormous and unrealizable burdens on the German health care system. The request for injunctive relief must therefore be dismissed.

As supplemental evidence of the substantial, wholly disproportionate impact of an injunction against the challenged embodiment, we submit, as

**Exhibit TW 1**

the expert opinion of Prof. Dr. med. Thomas Haak dated August 23, 2023 Prof. Haak is a specialist in internal medicine, endocrinology and diabetology and has been head physician of the diabetes clinic at the renowned Diabetes Zentrum Mergentheim, one of the largest treatment centers for diabetes in Germany, since 2000.

TaylorWessing

# I.
# Chronic diabetes and available measurement systems

Chronic diabetes is a serious disease with few good treatment alternatives. Over half a million patients in Germany rely on the challenged embodiment to control their potentially fatal disease. These products are particularly important for the most vulnerable patients with type 1 or type 2 diabetes on intensified insulin therapy. These patients require continuous glucose monitoring over 24 hours to make accurate and timely decisions about insulin injections, food intake, and other strategies in managing their disease and to avoid deterioration of their health or even life-threatening situations.

## 1. Diabetes is a serious, even life-threatening disease with alarming growth rates and a high prevalence in Germany.

Diabetes is a chronic, global epidemic that affects nearly half a billion people worldwide. Before insulin was discovered in 1921, certain forms of diabetes were a death sentence for affected patients. Today, synthetic insulin allows patients to treat their disease. However, dosages must be carefully calculated and blood glucose concentrations must be monitored accurately to ensure that blood glucose concentrations do not fall to a level that is too low (hypoglycemia or low blood glucose) or rise to a level that is too high (hyperglycemia or high blood glucose). Untreated or improperly treated diabetes can lead to cardiovascular disease, kidney failure, blindness, non-healing foot wounds, amputations, diabetic ketoacidosis, diabetic coma, and even death.

**Evidence:** 1. Expert opinion of Prof. Haak, Exhibit TW 1
2. Expert opinion

Millions of patients in Germany suffer from diabetes. There are over 8.5 million patients with diabetes mellitus in Germany, with an unreported number of at least another 2 million diabetes patients suspected. This high number of diabetes patients in Germany continues to increase rapidly and significantly. In Germany alone, more than 500,000 new cases are diagnosed every year. Around 12 million patients with diabetes are expected by 2040.

**Evidence:** 1. Expert opinion of Prof. Haak, Exhibit TW 1

2. Excerpts from the "German Health Report Diabetes 2023" of the German Diabetes Society, as **Exhibit 2**

TaylorWessing

3. Expert opinion

There are two primary types of diabetes, referred to as type 1 diabetes and type 2 diabetes. More than 370,000 patients in Germany have type 1 diabetes. Type 1 diabetes patients suffer from an absolute insulin deficiency caused by the loss of insulin-producing B cells in the pancreas. This has to be treated with insulin as from the start of the disease. In type 2 diabetes, sufficient insulin is available, but its effect is insufficient.

**Evidence:**
1. expert opinion of Prof. Haak, Exhibit TW 1
2. excerpts from the "German Health Report Diabetes 2023" of the German Diabetes Association, Exhibit 2
3. expert opinion

**2. Intensified insulin therapy necessity of diabetes patients to know their exact blood glucose levels and trends**

All 370,000 patients with type 1 diabetes have to be treated with insulin replacement therapy due to an absolute deficiency of the vital hormone insulin. Around 1.5 million people with type 2 diabetes also require such replacement treatment with insulin. For these patients, blood glucose monitoring is thus a central, life-saving measure for the effective treatment of their disease.

**Evidence:**
1. Expert opinion of Prof. Haak, Exhibit TW 1
2. Expert opinion

The aim of insulin treatment is to achieve a glucose concentration in the body that is close to normal. In healthy people, fasting glucose levels are between 70 and 110 mg/dl and rise by 40 to 60 mg/dl after eating. For people with diabetes on insulin therapy, the regular goal is therefore a glucose level before meals of 80 to 120 mg/dl and a rise of 60 mg/dl after meals. Specific therapy guidelines are determined by a physician within the framework of so-called "Intensified Insulin Therapy" (hereinafter "ICT").

Under ICT, the typical patient uses two insulin preparations: a rapid-acting insulin administered before meals and a long-acting insulin administered once or twice daily. The patient uses the rapid-acting insulin to metabolize glucose from food. The delay insulin is designed to prevent metabolic derailment during the day. An ICT usually consists of three to four injections of a short-acting insulin before the main meals and one to two doses of a delay

insulin daily.

**Evidence:** 1. expert opinion of Prof. Haak, Exhibit TW 1
2. expert opinion

Diabetes patients must organize the daily management of their disease themselves. In order to select the correct dose of insulin to be administered by ICT, the patient must know the current glucose concentrations in the body and ideally also their general trend (e.g., increasing or decreasing). Knowledge of the current glucose concentration in the body is therefore indispensable for successful and, above all, safe therapy of insulin-dependent diabetes mellitus. Based on the current glucose concentration, the patient independently determines how much insulin to administer. If the current glucose value is within the target range, the patient will apply his insulin only for the amount of carbohydrates planned in his meal. If the glucose concentration is undesirably high, more insulin will be given. If the glucose concentration is too low, the insulin dose is reduced. However, there are numerous other circumstances in daily life that have an influence on the course of the glucose concentration. For example, physical exertion, sports or alcohol intake lower the glucose concentration, while psychological or physical stress, illness or emotions can increase it.

As explained, it is therefore of utmost importance for diabetic patients to monitor their blood glucose concentration throughout the day in order to promptly correct hyperglycemia or hypoglycemia states. Similarly, trend information is essential to avoid hypoglycemic periods outside of mealtimes by alerting the patient and thereby allowing them to take precautions before blood glucose drops to a dangerous level potentially resulting in coma or death.

**Evidence for all the above:** 1. Expert opinion of Prof. Haak, Exhibit TW 1
2. Expert opinion

**3. Measurement of glucose levels in blood by finger pricking is not an adequate monitoring system: Patients with severe diabetes condition depend on CGM systems in order not to harm their health and lives**

Until the introduction of continuous glucose measurement by means of on body sensors, the measurement of glucose in capillary blood by pricking the finger was the standard (also referred to as "BGM" = "blood glucose monitoring"). Continuous glucose measurement (CGM) quickly took off and is considered a quantum leap in modern diabetology.

BGM only allows single measurements, which only reflect snapshots. Thus, it is only possible to speculate about the glucose profiles between the individual measurements. Even strong glucose fluctuations, which can occur at any time between two individual measurements, can thus go unnoticed. There is no warning function available with BGM if the glucose value reaches a dangerous level of hyperglycemia or hypoglycemia by falling or rising, respectively. Other disadvantages of BGM are the large gaps in monitoring glucose levels, especially if affected individuals measure too infrequently because the measurement is uncomfortable or patients do not want to measure in public. Furthermore, in practice, there is a risk that the manual logging of individual measurements deviates by up to 50% from the true measurements on the blood glucose meter, mostly due to incorrect timing, missing values, or incorrect values. Therefore, one of the many risks associated with BGM is the late detection of a state of severe hypoglycemia accompanied by loss of control or even danger to the life of the affected person and others (e.g. in traffic, at work, etc.). This is especially true for patients with hypoglycemia awareness disorder. The refusal of CGM treatment to patients whose care with a CGM system is indicated consequently meant a high risk of severe acute complications (hyperglycemia and hypoglycemia) including high hospitalization rates.

**Evidence:**
1. Expert opinion of Prof. Haak, Exhibit TW 1
2. Expert opinion

Compared to BGM, patients can continually check the current metabolic situation with CGM. The glucose data as well as the continuous course of the glucose value during the last hours can be retrieved easily, quickly, at any time and as often as desired and are also recorded automatically. This additionally enables physicians to track patients' glucose levels over time and analyze them for therapy adjustment. This allows for a more comprehensive insulin therapy plan based on a more accurate and complete picture of the patient's glucose history. Thus, by constantly monitoring glucose levels, it is possible to better adjust patients and keep glucose levels lower over the long term without the risk of hypoglycemia. Furthermore, the CGM systems provide trend arrows that indicate the future development of the glucose value. If the values exceed or fall below the limits, a warning (alarm) is given so that the patient is informed directly and can thus avoid the occurrence of a dangerous situation. This is particularly advantageous during the patient's sleep.

With CGM, it is also possible to share meaningful glucose data with other authorized persons by systematically involving persons such as parents, relatives, friends, or care providers

through linking, so that patients such as children, elderly persons, or persons in need of assistance who live alone and are at constant risk of hypoglycemia are better protected. Such involvement of relatives, especially in the case of children or persons in need of care, is not possible with BGM,

As a result, CGM systems lead to a lower risk of severe hypoglycemia and have significantly reduced the instances in which the patient is dependent on outside assistance or needs to be hospitalized.

Moreover, CGM greatly reduces unpleasant capillary measurements by finger pricking (puncture pain, post-operative bleeding, scarring of the fingertips due to years of pricking).

**Evidence for all the above:** 1. expert opinion of Prof. Haak, Exhibit TW 1
2. expert opinion

**4. Summary: Acute risks for CGM patients when reverting to BGM.**

In summary, BGM is clearly inferior to continuous glucose monitoring by sensors (CGM) in all respects. The advantages of CGM over spot measurement by finger pricking (painful several times a day) are outstanding. Patients with severe diabetes in whom intensified insulin therapy using CGM is indicated are dependent on CGM systems. If patients currently using the challenged embodiment were required to switch back to finger pricking, they would lose the sustained blood glucose control they require, resulting in significant harm to life and limb (including greatly increased cases of hyperglycemia, hypoglycemia, or diabetic ketoacidosis, and significantly increased hospitalizations), as vividly demonstrated by the substantially reduced hospitalization rates in diabetic patients since the introduction of CGM, as evidenced by clinical trials. A forced switch from CGM to BGM would also have a massive impact on treatment adherence and patient compliance with the resulting serious health risks and suffering for patients. The return to BGM would therefore be a massive medical step backwards for these patients overall.

**Evidence:** 1. Expert opinion of Prof. Haak, Exhibit TW 1
2. Expert opinion

All this shows that a regression from CGM to BGM would be medically unacceptable and ethically unjustifiable.

TaylorWessing

**5. Other health hazards and long-term risks for ICT patients without CGM**

Furthermore, there would be considerable long-term effects. The permanent loss of CGM leads to longer periods of hyperglycemia and hypoglycemia for patients on intensified insulin therapy. This in turn causes an increased risk of permanent damage to other organs, which is associated with reduced life expectancy and an increased risk of other diseases (such as cardiovascular disease, renal failure, diabetic retinopathy with resulting blindness). Overall, therefore, suspension of CGM would result in reduced life expectancy and quality of life due to comorbidities.

**Evidence:** 1. Expert opinion of Prof. Haak, Exhibit TW 1
2. expert opinion

**II.**

**Sudden conversion of more than half a million patients to a different CGM measurement system such as G6 or G7 within a few months not feasible**

The plaintiff would not be in a position to supply all of the defendant's more than half a million patients who are dependent on the challenged embodiment for the treatment of their serious diabetes disease with its products, namely the G6 and G7, immediately after the effectiveness of a corresponding cease-and-desist order, since it already does not have the required distribution structures and the necessary shipping logistics. The switch from the challenged embodiment to the G6 or the G7 is also in no way mundane, but means a complete system change for patients with considerable difficulties in operating the unfamiliar system. Due to the regulatory and administrative hurdles, such as above of all the special requirements for personal training, the changeover to another CGM system such as the G6 or the G7 is also extremely time-consuming in practice and, if at all, can only be designed for the long term. This results in a conversion period of at least one year.

In detail:

TaylorWessing

## 1. Requirements for a changeover to the G6 or the G7 in general - Logistics and delivery capability

Plaintiff would not be able to deliver the G6 or G7 as an alternative for affected patients in a timely manner without delay at the time of enforcement of a cease and desist order. It is unable to meet the challenges of logistics and delivery capability.

### a) The Plaintiff does not have the required distribution structure and shipping logistics

Even if the plaintiff were able - as it is not (see b) below) - to manufacture the necessary number of G6 or G7 products for more than half a million patients, it would not even be possible to actually deliver these devices to patients in Germany in a timely manner.

Both parties have switched their sales in Germany to a "B2C" system in which sales are made by direct mail to patients. The plaintiff would therefore have to be in a position to add another half a million users of the challenged embodiment as new customers to its existing approximately 130,000 customers and to supply them immediately with the required sensors. However, a fivefold increase (!) in logistics and support capacities requires a considerable period of time, which must certainly be estimated at more than a year, although even this period of time seems extremely ambitious. Anything else is obviously unrealistic.

The defendant's customers require a new sensor every 14 days, while the plaintiff (G6, G7) requires a sensor change every ten days. The sensors are usually sent as a package once a quarter. A package contains six to seven sensors (defendant), or nine to ten sensors (plaintiff). The half million users of the challenged embodiment thus receive a package with the required six to seven sensors every three months. Calculated over the course of a year, this amounts to around 2 million packages, which have to be fitted with the appropriate number of sensors in each case, addressed and handed over to a logistics service provider for dispatch. With a maximum of approx. 250 working days per year, 8,000 packages per day have to be packed and shipped. The patients receive their sensors once every three months, but on different days.

In addition, there are replacement deliveries for defective equipment and replacement deliveries for equipment damaged or lost in use, as well as individual orders from self-pay customers. In addition, the number of working days actually available is significantly lower than the number that is mathematically possible due to vacations, etc. The actual number of

packages shipped on a working day at the defendants is therefore up to 15,000. Moreover, since individual orders and replacement deliveries are individual cases, this again requires separate substantial logistics.

As evidence of all of the foregoing facts concerning the distribution and shipping structure, we offer:

**Evidence:** Testimony of Mr. Ansgar Resch, Divisional Vice President Commercial Operations - EMEAP at Abbott GmbH, Max-Planck-Ring 2, 65205 Wiesbaden, to be summoned via Abbott GmbH

If the plaintiff would want to supply more than half a million German diabetes patients with its products overnight, it would have to be in a position to supply all patients punctually before the end of the time at which they consume the last sensors still supplied by the defendants. To do this, it would have to suddenly increase its supply capacities fivefold in a very short time and stagger the deliveries from the outset in such a way as to ensure a seamless supply for every patient.

The plaintiff could in no way cope with this mammoth logistical operation. Statements to the contrary would be completely implausible.

**b) The plaintiff is not able to deliver**

The plaintiff has not even the sufficient production capacity to supply all patients currently using defendant's challenged embodiment overnight in the event of an injunction.

High-ranking representatives of the plaintiff have publicly stated on several occasions that the plaintiff’s manufacturing capacities are limited and, in particular, that it cannot guarantee that it will be able to deliver. In addition, there are the manifold global logistics and delivery problems. In detail, we refer only by way of example to the following quoted public statements by representatives of the plaintiff (emphasis in each case by undersigned).

With regard to the intended launch of the successor system "G7" in the meantime at the end of 2022 with repeated postponements and considerable delay, Steve Pacelli, Head of Corporate Development of the plaintiff, commented at the Wells Fargo Virtual Healthcare Conference in September 2020 that the timing of the launch was still unclear, not only because

TaylorWessing

of approvals, but also because of

> *"our capacity and our scale up. Because remember, the hole we put ourselves into with G6, trying to launch G6 for the first time, it was trying to do a global product launch. And we un- derestimated the demand. And we were living most of last year in kind of a hand to mouth or even oftentimes a backorder situation."*

In German:

> *" ..."*

In its 10-K filing, para. 11, 23, 26, 27, 28, 29, 33, dated 31 December 2020 to the United States Securities and Exchange Commission (SEC) the plaintiff admitted in relation to the envisaged start of construction of a new production facility in Malaysia:

> *"In 2020, we commenced construction of a new facility in Malaysia that we anticipate will add substantial manufacturing capacity.* ***There are technical challenges to increasing manufacturing capacity, including FDA qualification of new manufacturing facilities, equipment design and automation, material procurement, problems with production yields, and quality control and assurance.*** *... We have made progress in manufacturing to enable us to supply adequate amounts of product to support our commercialization efforts, however* ***we cannot guarantee that supply will not be constrained going forward."***
>
> ***"Our existing manufacturing facilities*** *are designed to manufacture current and next-generation sensors and transmitters, but* ***may not be scaled quickly enough to permit us to manufacture one or more of our CGM systems in quantities sufficient to meet market demand. In the past, we have had difficulty scaling our manufacturing operations to provide a sufficient supply of product to support market demand and our commercialization efforts.*** *From time to time****, we have also experienced brief periods of backorder*** *and, at times, have had to limit the efforts of our sales force to introduce our products to new customers. …* ***We will need to*** *adequately predict the market demand for our products and* ***increase our manufacturing capacity by a significant factor over the current level to meet or exceed the anticipated market demand."***
>
> ***"***

In German:

TaylorWessing

"…"

On January 26, 2021, Malaysia Economic News reported on initial delays regarding the start of construction of the production facility in Malaysia:

> ***"DexCom, Inc. will begin construction of its manufacturing facility on a 28-acre (11.33-hectare) site*** *in the Batu Kawan Industrial Park, Penang* ***in early February 2021 after missing its initial target of the second half (2H) of last year."***

In German:

*"…"*

About the problems in setting up the new manufacturing facility in Malaysia, SNC-Lavalin to Deliver High-Tech Medical Manufacturing Facility, ENP Newswire reported on 7 July 2021:

> *„[Dexcom's Malaysian manufacturing facility] is fast-tracked within an* ***18-month timeframe from construction to completion****."*

In German:

"…"

Jereme Sylvain, Executive Vice President, CFO & Chief Accounting Officer of the plaintiff, referred at the Wells Fargo Virtual Healthcare Conference in September 2021 to further delays with reference to the planned new manufacturing facility in Malaysia:

> *"So we will have an eventual* ***capacity of 200 million sensors****, and that's when Malaysia is online. But* ***that's not going to be really until in the latter half of next year."***

In German:

"…"

TaylorWessing

Even this assumption of a production start in Malaysia "in the second half" of 2022 turned to be completely unrealistic, the plaintiff itself had to explicitly admit (again Jereme Sylvain, at the Canaccord Genuity Growth Conference on 10 August 2022) by confirming that the production facility in Malaysia is only scheduled to start up next year ("... Malaysia, our third manufacturing location coming live next year").

However, the completion and commissioning of the new production facility in Malaysia is still uncertain at the moment, as the following pictures of the construction site, taken in mid-June 2023, show:

TaylorWessing

It is therefore unlikely that production will start in Malaysia any time soon.

These statements and pictures alone clearly show that the plaintiff had and still has very considerable problems to cope at all with the demand for its own products with the current number of patients. An additional demand of further more than half a million patients, who would need the CGM system immediately, could not be satisfied at all.

Prof. Haak also generally confirms from his clinical experience that the introduction of successor models of CGM devices into the market and the replacement of previous models by new devices regularly leads to delays (see para. 53 of his expert opinion).

**Evidence:** Expert opinion of Prof. Haak, Exhibit TW 1

**2. Switching to plaintiff's products is complex for patients**

Switching from the challenged embodiment to the plaintiff's G6 or G7 or to another manufacturer's device for continuous glucose measurement would not be a mere exchange of fundamentally identical and therefore interchangeable measurement systems and would not be a mundane matter. Rather, it would be a system change that would require patients to learn how to use a significantly different product.

Prof. Haak explains in his expert opinion, para. 40ff., that a patient who could no longer use the challenged embodiment and who would have to change to another CGM system will initially be considerably unsettled and worried. He or she will contact his or her diabetes care provider or visit him or her for discussion in order to redefine his or her further diabetes therapy, which must necessarily be modified. The diabetes care provider must now discuss with the patient whether or which treatment alternatives are available overall. Such a comprehensive consultation will also include obviously unsuitable systems for which patients - for example, based on their own research on the Internet or in other generally accessible information channels - explicitly ask. Since the operation of the plaintiff's systems differs significantly in many aspects (not least because of different software), many patients will also require instruction in their use and, if necessary, support with subsequent queries. Moreover, the reaction of patients cannot be planned.

This illustrates that in the event of sudden unavailability of the challenged embodiment, over half a million patients in Germany would have a high and at the same time immediate need for advice. As Prof. Haak explains in his expert opinion (para. 40 ff. and 48ff.), this leads to an extraordinarily high consulting effort for the specialized diabetes physicians or diabetes consultants to clarify the future supply with an alternative CGM, which they cannot provide in the short time and to this extent (see in detail below C. II. 3. and 4.).

**3. Requirements for a conversion to the G6 or G7 in particular - Personal training and care of patients.**

In the event of a changeover to the G6 or G7, the defendant's patients would have to be comprehensively trained in the use of the completely new measuring system such as the plaintiff's G6 or G7. As a general rule, online training would not be an option here, but rather a in-person training of the patient would be required. This makes the admission of a large number of new patients very time-consuming and requires large personnel resources.

**a) The plaintiff does not have staff capacity to provide the necessary counselling to over half a million additional patients**

Continuous glucose monitoring devices are comparatively complex devices, and their proper functioning and use is vital for patients. Patients therefore need intensive advice and support, which must also be provided regularly in German. This applies not only to the inclusion of a new patient in the distribution system (see b. below), but also to the ongoing support of the existing customer base. The defendants therefore have over 600 customer service representatives who can contact customers by telephone or video conference and offer them assistance and advice. In addition, there are further employees who plan, coordinate and monitor customer service.

**Evidence:** Testimony of Mr. Ansgar Resch, b.b.

These employees are highly specialized and thoroughly trained to advise on the defendant's safety-critical products. Given its significantly (four times) smaller customer base, the plaintiff does not have anything like comparable capacities for customer support. It is not possible to build up such capacities on an ad hoc basis, as the deployment of new account managers requires a long lead time. On the one hand, it is not easy to find suitable account managers on the labor market. On the other hand, the new customer service representatives must first be trained in detail about the products and the applications and problems encountered by the patients.

**Evidence:** Testimony of Mr. Ansgar Resch, b.b.

It is simply impossible to imagine how the plaintiff could build up these capacities with less than a year's notice and the required number of staff to meet such sudden demand.

**b) Personal training mandatory in the event of a changeover**

The process of acquiring new customers is a very time-consuming one, and for regulatory reasons alone it cannot be handled purely through online contacts.

Even the purely administrative processes require time and personnel. Every new patient must first be registered into the system and present a correct prescription. The defendants use this prescription to clarify reimbursement by the patient's health insurer before delivery can begin.

This routine process alone requires considerable time and resources, especially since in up to one in ten cases documents are missing or not filled out correctly, necessitating additional work steps and inquiries. For half a million new customers, this administration alone would therefore take several months.

**Evidence:** Testimony of Mr. Ansgar Resch, b.b.

Furthermore, the new patients must in particular also be advised in detail before the supply of the G6 or G7 as a new CGM product can begin. Thus, patients who have so far used the challenged embodiment would require detailed advice and education about the available treatment alternatives, taking into account their personal life and disease situation, their co-medication and concomitant diseases, and their individual capabilities. The respective existing regulatory requirements for the admission of new customers in the event of a changeover can be seen, by way of example, in the document provided as

**Exhibit TW 3**

from the Federal Social Security Office (*Bundesamt für Soziale Sicherung, BAS*), the responsible supervisory authority for public health insurance funds, dated April 6, 2021, to a health insurance company (in a partially redacted version). Similar letters are sent to all public health insurers that reimburse CGM systems for their insured persons. Since more than 90% of diabetes patients in Germany have public health insurance, reimbursement by the public health insurance is an indispensable prerequisite for changing the CGM system.

In its letter, BAS emphasizes that, as an expression of the general duty to provide advice pursuant to Section 127 (5) Sentence 1 SGB V, the health care provider should provide detailed advice on which aids are generally available or suitable before a CGM system can be prescribed and reimbursed by the health insurance fund. This includes, in particular, advice on treatment alternatives that are not subject to co-payment. Advice on the selection of a suitable blood glucose monitoring system is usually provided by the physician or diabetes advisor in charge of the patient.

If a patient has opted for a CGM system, a technical briefing of the patient is additionally required and mandatory according to the letter of the BAS, in which the functionality and the use of the device is explained to the patient in detail. Thus, according to the BAS, with regard to § 127 para. 1 sentence 4 SGB V, it is necessary that the health care provider instructs, i.e.

trains, the patient in the proper use and safe application of the specific device. This is of particular importance when switching to a different CGM system such as the G6 or the G7, in order to avoid incorrect applications and associated potentially life-threatening errors in blood glucose monitoring.

For the consultations or trainings, according to the view of the BAS, a personal consultation is usually required.

According to the BAS, this means that the patient must always be advised on site in the presence of a trainer and must also have the opportunity to try out the device himself, ask questions and clarify basic questions about handling, care and cleaning. In the view of the BAS, online instructions are generally not permissible, because any previous knowledge (or lack thereof) and the patient's individual need for advice must be taken into account in the training. For example, older people, children or people with less technical affinity in particular require personal training to ensure that they have understood how to use the device, that they have been able to try this out together and that they can therefore use it safely in everyday life (p. 6, 3rd paragraph, Exhibit TW 3).

Only in the exceptional case that the insured person explicitly refuses the personal instruction on the device, an online instruction can be considered according to the BAS (p. 6, 4th paragraph, Exhibit TW 3). Even then, however, it must be a personal online training, i.e. in the form of a video conference, during which the patient can ask questions, and not merely the playing of a prefabricated video or an online tutorial during which the patient cannot ask individual queries.

In view of the fact that more than half a million patients would have to be switched to the G6 or G7 and thus also trained in person, there is therefore an extraordinary amount of training and consulting work. This is also confirmed by Prof. Haak in his expert opinion (Exhibit TW 1) in para. 43 ff., in which he states that online training or an e-learning module cannot ensure with the necessary certainty that patients who are not technology-savvy, i.e. older patients (these are to a large extent the patients with type 2 diabetes), have understood how to use the new device.

This applies in particular when patients who currently use the challenged embodiment, which is characterized by its easy and uncomplicated operability (para. 45 of Prof. Haak's expert opinion), have to switch to the plaintiff's other devices G6 or G7, which differ in many aspects

(see also C. II. 4. and 5. below). In practice, it is not only technical differences that cause problems, but also the different options for menu navigation in the operation of the reader or in the smartphone app. In addition, the G6 requires a separate transmitter that must be removed from the sensor holder and inserted into the holder of the new sensor each time the sensor is changed. This is much easier when switching between different devices of the same manufacturer, such as from the FreeStyle Libre 2 (FSL2) to the challenged embodiment (= the newer FreeStyle Libre 3 (FSL3)) of the defendant, where the patient finds familiar tools and menu design of the predecessor model again with the newer device (para. 43 expert opinion Prof. Haak). A safe and successful therapy depends on the correct monitoring of the glucose progressions and thus inevitably requires that the patient is able to operate the CGM system reliably and safely. Even partial incorrect use can have fatal consequences for the patient (para. 44 expert opinion Prof. Haak).

How the plaintiff, who currently has a total of just around 130,000 customers in Germany in its portfolio, intends to offer more than half a million patients personal technical instruction in the operation of their G6 or G7 within a very short time, virtually overnight, is a complete mystery.

This requirement for technical instruction alone would inevitably prevent the conversion of more than half a million patients to another system such as the plaintiff's G6 or G7 in a period of less than a year. In this regard, Prof. Haak emphasizes in his expert opinion that, based on his experience of more than 20 years at the Diabetes Zentrum Mergentheim, it is not comprehensible to him how the conversion of such a large patient population, as represented by the number of users of the challenged embodiment in Germany, to a CGM system of another manufacturer such as the G6 or the G7 should succeed within a few months (Exhibit TW 1, para. 48). That is even valid if patients – as it is not -should still have reserves of sensors of the challenged embodiment for a few weeks and even if sufficient other devices were available. We also refer to the further statements by Prof. Haak from the perspective of the medical profession in his expert opinion (Exhibit TW 1, paras. 54 ff.).

**c) Time spent on training by the plaintiff cannot be reasonably represented**

The conversion to the G6 or G7 as a different CGM measurement system and the advice and training to be provided in this context cannot be integrated into the patient's regular, approximately quarterly, presentations to the physician. This is confirmed by Prof. Haak in his expert opinion (Exhibit TW 1 in para. 46 f.). These regular appointments are intended for the therapy review and, if necessary, therapy adjustment as well as preventive examinations for

consequential damages of diabetes and cannot be extended ad hoc. Thus, at least one additional appointment is required for changeover and training, which blocks capacity in the practices. The instruction and training for the change of the CGM system would exceed the scheduled time frame for a large number of patients or limit the focus on the controls and therapy adjustments.

A time frame of 30 to 45 minutes is required for the personal training of a patient who previously used the challenged embodiment and needs to be switched to the G7. If the changeover to the even more complex and two-part G6 of the plaintiff takes place, even one to two hours are to be estimated for this (expert opinion Prof. Haak, Exhibit TW 1, para. 46). With half a million patients to be changed over, this would amount to special appointments for half a million patients and to a consulting effort of 375,000 - 687,500 hours (under the premise that about half of the patients would be changed over to the G7 and the other half to the G6). This would equate to 46,875 - 85,940 workdays (calculated on an eight-hour basis), or a conversion period of 9.5 to 17 workweeks if 1,000 diabetes counselors were employed full-time at the same time.

These numbers for the time required for training illustrate per se that an ad hoc changeover from the challenged embodiment to the G6 or G7 of the plaintiff within a few weeks is absolutely impossible, considering in addition that the above number do not include at all the further support required for call backs of patients in the follow-up to the consultation and advice. Even if the training courses could be integrated into the quarterly routine and control appointments - as they could not - not all patients could be converted within a quarter because of the sheer volume involved. In view of the number of approx. 1,200 specialist practices in Germany, each specialist practice would have to convert and advise approx. 417 patients. This is also confirmed by Prof. Haak in his expert opinion (Exhibit TW 1) in para. 49. Even if the average time required for the entire conversion in a specialist practice were to be estimated at only 45 minutes per patient, this would fully utilize a full-time employee for almost eight weeks in a 40-hour week. In Prof. Haak's experience, however, the time required for such a conversion is significantly higher (Exhibit TW 1, para. 49). It must also be taken into account that such a considerable conversion effort cannot be integrated into the daily business of a specialist practice. Specialists are already booked up for weeks or months in their regular day-to-day practice or clinic, as should be well known in court. We also refer to the statements by Prof. Haak in his expert opinion (Exhibit TW 1, para. 50).

TaylorWessing

**4. Required period for a changeover: At least one year**

**a) Time required for changeover per se at least six months**

A changeover from the challenged embodiment to a CGM replacement system would take at least six months even if the replacement systems were immediately available, no patient training had to take place, and there was no additional administrative and consulting work for the practices and clinics providing care.

Diabetes patients visit their specialist approximately every quarter. This already results in a conversion period of at least three months. However, it must also be taken into account that when enforcement of the cease-and-desist order begins, not every patient has of course just received a fresh package of sensors for three months, so that additional time must be planned for the changeover, as some patients may have just completed their specialist appointment or will not see their specialist again for another five to six months, for example. On the other hand, some patients have run out of stock at home and need immediate delivery, regardless of their appointments with the specialist. Given this background, a changeover period of not less than six months can be assumed in order to ensure that all patients have the opportunity to visit their specialist, change over the measuring system and exchange their supplies.

In practice, however, a conversion of over half a million patients will take **at least a year, if not longer,** for the following reasons already mentioned:

**b) Lack of sufficient distribution structure and shipping logistics of the plaintiff.**

Due to the missing sales capacities and shipping logistics on the side of the plaintiff (see above C. II. 1.) a conversion within a period of less than one year cannot be realized per se.

**c) Required delivery quantities**

Within one month, new G6 or G7 CGM systems would have to be immediately available for more than half a million patients, and these would also have to continue to be available in the future. Since the plaintiff claims that it usually supplies a 3-month supply (nine to ten G6/G7 sensors per quarter with a useful life of 10 days per sensor), according to its own presentation it should be able to supply an additional more than 4.625 million sensors per quarter (each patient requires about 37 G6/G7 sensors per year; with half a million patients this makes 18.5

million sensors per year) immediately, i.e. more than 1.54 million per month. This demand continues even after the basic conversion of patients, i.e. the plaintiff would have to be able to supply over 1.54 million additional sensors per month not just once, but on an ongoing basis.

As shown above (C. II. 1.b.), there are already reasonable doubts at the moment about the plaintiff's ability to deliver. If now, from one day to another, more than 1.54 million additional sensors per month would have to be delivered within short notice, it is clear that this cannot work. Currently, the plaintiff delivers just about 390,000 sensors per month (with about 130,000 patients).

**d) Training effort**

As explained above (C. II. 3.), the necessary personal training in the event of a switch from the challenged embodiment to the G6/G7 of the plaintiff could not be provided by the specialist practices and clinics in the course of normal day-to-day business. Prof. Haak explained in his expert opinion (Exhibit TW 1, para. 53) that the period for the changeover - assuming delivery capability - would extend over at least nine months to a year, if not beyond.

**e) Required long changeover period confirmed by introduction of FSL3**

The fact that the conversion of patients from one CGM device to another CGM device takes a considerable period of time is confirmed by the course of the introduction of the current CGM device FSL3 of the defendant, namely the challenged embodiment. Although many of the problems that would exist with a conversion to the plaintiff's G6/G7 were precisely not present with the challenged embodiment, the conversion of patients took a full year. And this despite the fact that the challenged embodiment is intuitively understandable in handling and operation for users who are used to the FSL2 of the defendant and therefore - in contrast to plaintiff's products - can be used without extensive training.

Nevertheless, the reintroduction of the challenged embodiment for such a large patient population proved to be extremely time-consuming, especially with regard to the necessary cooperation of the treating physicians and diabetes advisors and the required changes to the prescriptions. Despite the conversion campaign of patients from FSL2 to the challenged embodiment, which had been pursued since March 2022 with the greatest emphasis and considerable effort and with maximum use of all resources on the part of the defendant, the

conversion of patients to the challenged embodiment (FSL3) took until Q2/2023, i.e. a period of one year.

**Evidence:** Testimony of Mr. Ansgar Resch, b.b.

This considerable changeover period was necessary even though the defendants, unlike the plaintiff, did not face production and delivery difficulties and already had the necessary structures and personnel capacities to supply and support a correspondingly large customer base. Nevertheless, due to the limited resources of physicians and diabetes consultants in the specialist practices, there was hardly any scope to significantly accelerate the conversion to the challenged embodiment.

**f) Additional delays due to significant shortage of skilled workers**

There exists also since some time a significant shortage of medical professionals. Even now, without a changeover of more than half a million patients pending, medical professionals are working "to the hilt." This state of massive acute shortage of medical professionals will continue in the coming months and years, with no improvement currently in sight. This should be well known by the courts. Prof. Haak also confirms this very high shortage of specialist staff at the Diabetes Zentrum Mergentheim, which considerably complicates or restricts the daily work processes there (expert opinion Exhibit TW 1, para. 51). This considerable shortage of specialists would therefore lead to further delays in the event of a conversion of more than one million patients, for example in the holding of training courses for new patients or in the provision of advice to the patients to be converted, especially as the advisors have regular personal contact with patients.

**g) Conclusion**

In summary, it is clear that the plaintiff would not be capable of offering a replacement with its G6/G7 system within a reasonable time to over half a million patients who would be without the challenged embodiment that is vital to them in the event of an injunction and its enforcement. Even under optimistic (though arguably unrealistic) assumptions, such a changeover would instead require a period of at least one year. In view of all this, a transition period of at least one year is imperative in the interest of patient care.

**5. No adequate substitute for the challenged embodiment by other systems**

There is no adequate substitute for the challenged embodiment that allows for equivalent, safe, and easy-to-use glucose measurement for patients.

**a) Predecessor model FSL1 is not an equivalent replacement**

Switching to the defendant's predecessor device FSL1 is not an adequate substitute, as this device does not have an alarm function for exceeding or falling below the target range.

CGM devices used in intensified insulin therapy, such as the challenged embodiment or the G6 and G7 of the plaintiff, have an alarm function that actively informs the user when limit values are exceeded or not reached. Alarm functions are taken for granted by diabetes patients as a standard feature of modern CGM measuring systems. And this is not a question of mere comfort. In fact, the alarms contribute significantly to safety and risk reduction for patients and their health. Without such alarms, patients would otherwise have to measure their glucose levels approximately every half hour, as glucose levels are very dynamic and can react unexpectedly to a variety of events, such as diet, exercise, other illnesses, and the patient's emotions and moods, which can lead to a sudden rise and especially a sudden fall in blood glucose levels. Such relevant fluctuations may occur unexpectedly and unnoticed by the patient and are conceivable within a period of about 30 minutes. Moreover, there are times when the patient cannot measure his blood glucose level every 30 minutes, especially at night while sleeping or driving a car. In this regard, we refer to the comments of Prof. Haak in para. 55 of the expert opinion.

Since the FSL1 does not have such an alarm function, a patient would be exposed to a considerable risk to his health without these alarms. This applies all the more to patients who use the challenged embodiment and are accustomed of being alerted to critical situations by their CGM device (Prof. Haak, loc. cit.).

Thus, the FSL1 does not represent an adequate, equally safe substitute measuring system compared to the challenged embodiment (see also expert opinion Prof. Haak, Exhibit TW 1, para. 54-58).

**b) FSL2 does not provide valid conversion alternative due to parallel attack by plaintiff**

The predecessor model of the challenged embodiment, the FSL2 of the defendant, is challenged by the plaintiff in parallel proceedings before the Chamber of this court (Ref.: 21 O 6557/23, 21 O 6025/23 and 21 O 6411/23) and before the District Court Mannheim (Ref. 7 O 78/21, 7 O 79/21, 7 O 8/22, 7 O 99 /21, 7 O 80/21, 7 O 81/21, 7 O 7/22and Ref. 7 O 102/21) with an action for alleged patent infringement. The plaintiff asserts a claim for injunctive relief there as well. It therefore also emerges as a non-valid conversion option, as patients would be exposed to the - unreasonable - risk that, if they did convert to the FSL2, they would also be unable to continue using it in the face of a parallel injunction.

**c) Plaintiff's G6 and G7 are not adequate alternatives to the challenged embodiment**

The challenged embodiment is easier for patients to use and easier to handle than the plaintiff's CGM system. The G6 and G7 differ from the challenged embodiment in terms of size, user interface including menu navigation in the reader and smartphone app, mounting materials, measurement frequency, and wear time. Furthermore, the G6 is multi-part (in contrast to the one-piece design of the sensor unit of the challenged embodiment) and thus also more complex to handle in view of this background: while the sensor electronics can be used for 90 days, the sensor needle with the adhesive plate must be replaced and the sensor electronics unit clipped in every ten days. This complexity also makes the system error-prone and less suitable for many elderly patients and patients with limitations (patients with impaired vision, impaired concentration, impaired mobility) as well as children.

**Evidence for all the above**: 1. expert opinion of Prof. Haak, Exhibit TW 1
2. expert opinion

In addition, the significantly larger distribution of the challenged embodiment on the German market also shows that the G6 or G7 of the plaintiff does not represent an adequate treatment alternative for many patients (see above C. II and Exhibit TW 1, para. 42).

**d) BGM is not a treatment alternative and there are no equivalent CGM measurement systems available from other manufacturers**

Blood glucose measurement using test strips (BGM), i.e. individual measurements by finger pricking, is not at all a diabetologically justifiable alternative to measurement using CGM. A (forced) return to the control of glucose values in the blood by finger pricking would be a massive medical step backwards, which would be neither medically nor ethically justifiable.

We refer to our above statements (C. I) as well as to the expert opinion of Prof. Haak according to Exhibit TW 1, para. 62.

This also results from the guidelines of the Federal Joint Committee (GBA), which allow the prescription of a CGM system at the expense of the cost bearers if the therapy goals agreed between patient and physician cannot be achieved with BGM. In this regard, we refer additionally to § 2 of the German health care act submitted as

**Exhibit TW 4**

and known as the resolution of the Federal Joint Committee dated June 16, 2016.

CGM systems of other manufacturers, which would be immediately available as an equivalent alternative product in sufficient quantity in case of an immediate failure of the challenged embodiment, do not exist and are not known to Prof. Haak. In particular, there is also no system recognizable which could be made available in sufficient quantity for the large number of users of the challenged embodiment in Germany at short notice (see expert opinion pursuant to Exhibit TW 1, para. 38 and 39).

This is especially true for Medtronic's Guardian real-time CGM system, which requires blood glucose measurements (i.e., measurements by traditional finger prick) to be taken several times a day for calibration purposes and therapy decisions. This represents a significant disadvantage. In addition, Medtronic has only a very small market share of about 7% and is therefore of minor importance. It would be even less able than the plaintiff to supply the large number of patients currently supplied with the challenged embodiment.

**Evidence:** 1. Expert opinion by Prof. Haak, Exhibit TW 1.
2. Expert opinion

**6. Incidentally: a judgment ordering a prohibitory injunction would jeopardize patients who need multiple therapy options, since not all CGM systems are equally suitable for all patients.**

As explained in detail above (C. II.1 and 3.), the challenged embodiment differs in various ways from the plaintiff's CGM system G6 or G7. Although the G6 or G7 may be a suitable option for some patients, it is not a suitable alternative for other patients. This is also

evidenced by the fact that physicians in Germany, who are committed to the well-being of their patients, have been prescribing the defendant's CGM system in the vast majority of all cases for a long time. It is therefore of outstanding importance for patients that their physicians can treat them according to their individual situation and needs with the best possible therapy in the specific individual case.

It is therefore essential for physicians to have several therapy options available, as not all devices are equally suitable for every patient. The patient's situation is regularly quite different on an individual basis. The treating physician must therefore make the choice of CGM system individually and with regard to the patient's health condition and life situation. For this purpose, the treating physicians need a "toolbox" with a selection of different systems in order to be able to prescribe a device that is best suited to the patient's individual well-being and life situation.

**Evidence:** 1. Expert opinion of Prof. Haak, Exhibit TW 1.
2. Expert opinion

The plaintiff is also absolutely aware of the importance of this requirement. For example, at a virtual investor conference, the Citi 2021 Healthcare Services, Medtech, Tools and HCIT Virtual Conference on February 24, 2021, plaintiff's COO and CFO, Quentin Blackford, stated that he:

> *"welcome[s] what Abbott has done on [its] side of the business" because "healthy com- petition" provides a "better outcome" for "the patient."*

In German:

> *"…"*

Thus, the plaintiff itself has publicly conceded that a choice among multiple measurement systems is conducive to patient welfare.

## 7. Summary: An injunction results in a concrete risk of serious complications and even deaths for a large number of diabetic patients

In summary, it can thus be stated that an injunction not only poses a significant threat to the health and lives of the more than half a million diabetes patients in Germany who use the challenged embodiment. Rather, it must be assumed that, in the event of an injunction, a considerable number of serious acute complications and even deaths will actually result. The

expert Prof. Dr. Haak confirms this alarming consequence in his expert opinion (Exhibit TW 1, p. 3 below / p. 17 middle) as follows:

> *"For people with diabetes who require a supply of sensors, it is indefensible and ethically unjustifiable to limit or even eliminate altogether the availability of sensors from a particular manufacturer that already has a large presence in the marketplace. Such an approach would almost certainly and demonstrably lead to severe acute complications and even deaths. A comparable procedure has not yet existed in diabetes therapy, and it is inconceivable that practitioners will succeed in implementing such a medically incomprehensible and unnecessary process in a sufficient manner."*

**III.**
**Disproportionate additional financial burden on the health care system, especially health insurers**

The enforcement of an injunction would represent a disproportionate additional burden for the healthcare system. This applies in particular to public health insurers, who have to pay for the diabetes therapy of patients insured with them.

Even assuming that the plaintiff would (as, however, it would not) be able to supply all of the approximately 500,000 patients currently using the challenged embodiment who would be coerced into immediately switching their CGM system due to a failure to do so, such a forced switch would represent a disproportionate hardship and unacceptable burden for the German health insurance funds and the health care system in general. Such a switch would entail immense costs for the health care system in the order of at least EUR 330 million per year, more realistically an amount significantly in excess of this, around EUR 710 million.

The following calculation is based on the premise that all of the defendant's patients would be switched to the plaintiff's new G7, although in reality, due to the lack of sufficient availability (supply capability) of the G7, it is to be expected that at least a significant proportion of patients would probably not be switched to the G7, but rather to the plaintiff's more expensive precursor model G6. The actual additional financial burden on the health insurance funds would therefore amount to an even significantly higher sum than the aforementioned EUR 330 million per year.

The unit price for a sensor of the challenged embodiment is EUR 65.90. The sensors must be replaced every 14 days. In other words, a patient needs approximately 26 pieces of 65.90 EUR each per year. The total costs per year and patient for the use of the challenged embodiment

thus amount to EUR 1,713.40.

In contrast to the challenged embodiment, the sensors of the G7 must be replaced every ten days, so that a patient requires approximately 37 sensors per year. The sales price for a G7 sensor corresponds approximately to that of the challenged embodiment and is therefore also set at EUR 65.90 here. Accordingly, the total annual costs for the use of the G7 of the plaintiff amount to EUR 2,438.30 per patient.

As a result, the plaintiff's G7 CGM system incurs additional annual costs of EUR 724.90 (= over 42%) per patient compared to the defendant's CGM system.
If half a million patients were now switched from the challenged embodiment to the plaintiff's G7 system, this would burden the German healthcare system with additional costs of over EUR 360 million per year based on published product prices. Such an additional burden on the German healthcare system would obviously represent a disproportionate hardship.

This additional burden or disproportionality would - as mentioned - be even more drastic in case of a (partial) conversion from the challenged embodiment to the plaintiff's G6. The plaintiff's G6 CGM system, in contrast to the defendant's one-piece system, is multi-part and consists of a sensor and a transmitter. As with the G7, the sensors of the plaintiff's G6 must also be replaced every ten days (= 37 sensors per year). The transmitter must also be replaced every 90 days, so four transmitters are required per year. The retail price for a pack of three G6 sensors is EUR 249.90, one transmitter costs EUR 190.40 EUR. Accordingly, the total annual costs for the use of the plaintiff's G6 system amount to EUR 3,843.70 per patient, which corresponds to an additional burden per patient and per year of EUR 2,130.30 (= just under 125%). The actual additional burden is therefore likely to be well above the aforementioned EUR 360 million, and more realistically probably in excess of EUR 710 million (assuming half of the defendant's patients are switched to the plaintiff's G7 and G6).

Furthermore, the health insurance funds would incur an extraordinarily high administrative burden and associated costs, as more than half a million patients would have to apply for a new CGM system with short notice and a corresponding approval procedure would have to be carried out in each case - irrespective of the fact that a sufficient supply of all patients with replacement devices is impossible anyway.

In addition, all patients would have to be trained in the new device (see C. II. 3. above), assuming that there is sufficient substitute supply (as there is not). The remuneration for this

would in turn have to be borne by the health insurance funds.

Finally - as explained in detail above under C.II.1 - a sufficient supply of all patients with CGM systems would not be ensured if the challenged embodiment were omitted. The vast majority of patients would remain without a CGM system and would have to resort to traditional finger pricking. This would risk serious damage to life and limb of the patients concerned and possibly of uninvolved third parties due to accidents caused by hypoglycemia or hyperglycemia. As explained in detail in C. II. 5. d. above, returning to finger pricking would result in significantly poorer blood glucose monitoring with accompanying severe acute complications of hyperglycemia or hypoglycemia and even death. Patients would ultimately have to be hospitalized significantly more often with corresponding, significantly higher costs for health insurance providers.

**Evidence**: 1. expert opinion of Prof. Haak, Exhibit TW 1
2. expert opinion

As

**Exhibit TW 5**

we are also submitting a letter from Mr. Thomas Bodmer. Mr. Bodmer is deputy chairman of the DAK, one of the largest German health insurers with about 5.5 million insured. In this letter, Mr. Bodmer explains that CGM is extremely important for insured persons with ICT. He confirms that CGM represents a quantum leap for the care of patients with ICT and that a return to test strips and finger pricking would represent a significant medical step backwards for patients, which is unacceptable and also represents an irresponsible deterioration.

Furthermore, Mr. Bodmer confirms that the number of hospitalizations due to acute hypoglycemia has been significantly reduced by CGM and thus the treatment costs of patients with ICT have also decreased significantly. A return to finger pricking would, conversely, lead to significantly higher hospitalization rates and correspondingly significantly higher costs (for health insurers).

Furthermore, it is important for DAK as a health insurer with regard to innovation promotion and price competition that several suppliers of CGM systems are on the market, since only competition leads to innovation and cost efficiency. The failure of a major supplier in the market for CGM systems - such as the defendant in the present case - would lead to a substantial burden on the healthcare system and an unnecessary threat to adequate patient care.

TaylorWessing

**IV.**
**Summary**

For the reasons stated above, it results that the injunctive relief is disproportionate in the present case. The same applies to claims for recall and destruction, which would also prevent the distribution of the challenged embodiment. Here, the disproportionality results from Sec. 140a para. 4 Patent Act.

**V.**
**Reasons for the application pursuant to § 712 ZPO**

Based on the foregoing, it follows that enforcement of causes of counterclaim I.1. and I.4. will result a disadvantage to the patients and the health insurers that cannot be compensated. The defendant must therefore be allowed to avert enforcement by providing security or depositing security without regard to any security provided by the creditor, Section 712 Code of Civil Procedure (*Zivilprozessordnung, ZPO*).

Insofar as case law has so far rejected the application of Sec. 712 ZPO with regard to disadvantages not suffered by the debtor itself but by third parties, with reference to the fact that third party interests are not of importance within the scope of Sec. 712 ZPO, this view can no longer be maintained after the entry into force of the 2nd Patent Law Modernization Act. The explicit inclusion of third party interests in the wording of Sec. 139 (1) Patent Act implies that, with immediate effect, these must also be taken into account within the scope of the enforcement proceedings and thus also within Sec. 712 ZPO. Otherwise, the legislative intention to protect third parties from disproportionate injunctive relief would be nullified.

**D*. Alternative line of argument*: stay of proceedings due to obvious invalidity**

If the court unexpectedly finds that the Patent is infringed, the proceeding at least must be stayed. Abbott GmbH lodged an action for the revocation of the Patent to the Federal Patent Court on 31 July 2023. We submit the statement of claim including exhibits in

**Exhibit TW 6** (statement of claim) and **Exhibits TW 7 / (cited prior art references).**

The Patent evidently lacks novelty over the prior art documents D1 - *Pace* and D2 – *Donnay (*see section I. below*)*. Indeed, as shown in detail below, others in the continuous glucose monitoring field,

including defendant, were in possession of this well-known mechanical anti-rotation feature several years before the priority date of the patent in suit since it concerns a trivial feature.

Assuming for the sake of argument that the Patent's teaching is novel, it at least does not involve an inventive step (see section II. below).

## I.
## Lack of novelty over D1 (US 2013/0150691 A1 – "*Pace*")

The cited document D1, which was published on 13 June 2013 and therefore forms part of the state of the art under Art. 54(2) EPC, anticipates the purported novelty of the Patent's teaching (see also action for revocation of the Patent, Exhibit TW 6 page 10 to 23)..

D1 discloses continuous glucose monitoring devices comprising a sensor to be applied under the skin. By means of the sensor, the patient's glucose levels can be measured and monitored in vivo. To insert the sensor under the patient's skin, D1 discloses an applicator fitted with a (slotted) needle. The needle pierces the patient's skin and in this way introduces the sensor, and is withdrawn by the applicator after the sensor has been positioned in place (see D1, [0005] to [0007]). Thus, the document discloses a CGM device as claimed by the Patent.

Two different variants of embodiments, which are described in D1, anticipate the novelty of the Patent.

### 1. Lack of novelty based on the embodiment in figures 21A to 21C of D1

The embodiment shown in figures 21A to C discloses all features of the Patent and D1 therefore anticipates the purported novelty of the Patent.

The electronics assembly 2102 in figure 21A is equivalent to the on-skin sensor assembly as claimed by **feature 1**.

TaylorWessing

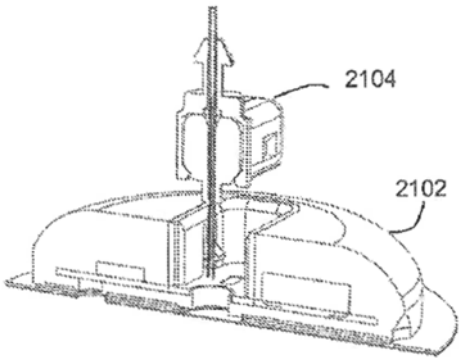


FIG. 21A

Figure 21C further shows the needle hub (sensor assembly gripper 2106) consistent with **feature 2.**

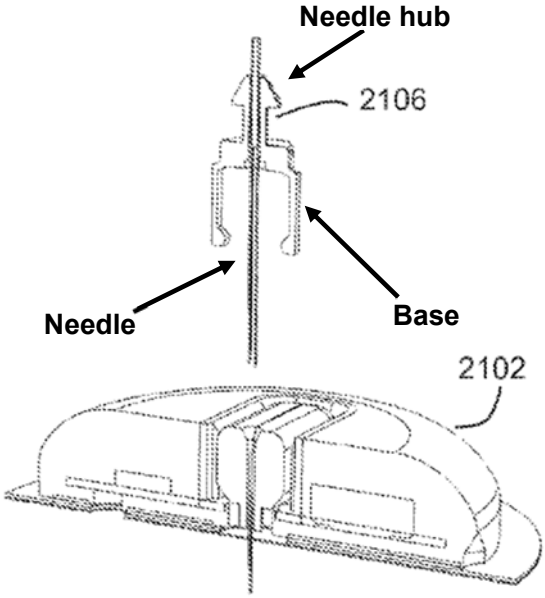


FIG. 21C

If the court adopts the plaintiff's view that the needle hub of the product in dispute is configured to apply the sensor assembly to the skin, D1 also discloses **feature 2**. Being contained inside the applicator disclosed in D1, the needle hub is also pressed down when the sensor assembly is positioned on the patient's skin, as figure 21B shows. As paragraph [0123] indicates, Figs. 21 A to C disclose only an alternative needle hub included in the applicator disclosed in D1.

TaylorWessing

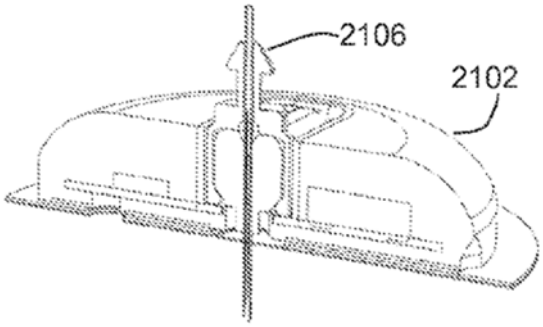


FIG. 21B

D1 further discloses that the needle hub 2106 comprises a base, as claimed by **feature 2.1**.

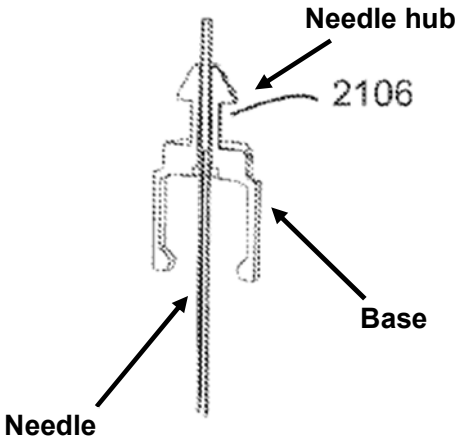


Fig. 21C

In accordance with the principles of claim construction discussed in B.I.3.b., the base forms the bottom part of the needle hub. Above and beyond that, the Patent does not specify how the base is delimited from other parts of the needle hub or what its shape is. The arms disclosed in D1 therefore anticipate the novelty of the base of the needle hub.

Furthermore, the base of the needle hub is configured to be at least partially disposed in an aperture of the on-skin sensor assembly, wherein the aperture is adapted for sensor and needle insertion. The needle hub of this embodiment comprises two arms that are part of the base of the needle hub and are disposed in an aperture (arrow) of the on-skin sensor assembly:

TaylorWessing

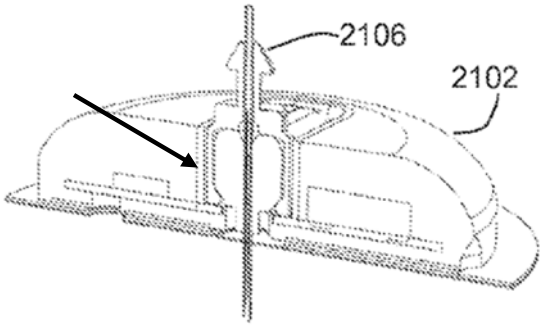


FIG. 21B

As illustrated by figure 21A, the aperture of the sensor assembly is designed for the sensor and the needle to be guided through it, as provided by **feature 2.1**. The aperture is adapted for sensor and needle insertion.

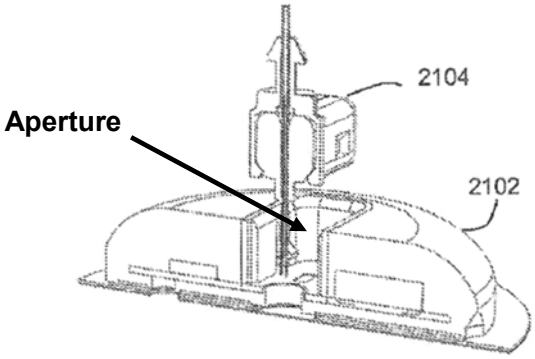


FIG. 21A

D1 further discloses an anti-rotation feature at the base of the needle hub as per **feature 2.2**, which is configured to prevent rotation of the base within the aperture. In the embodiment discussed herein, the anti-rotation feature is characterized by the two arms which are shown in figure 21C. As described in B.I.3.b., the Patent captures all possible design variations with the result that the arms designed as grippers may be an anti-rotation feature as long as they are objectively suitable to prevent rotation of the base within the aperture.

TaylorWessing

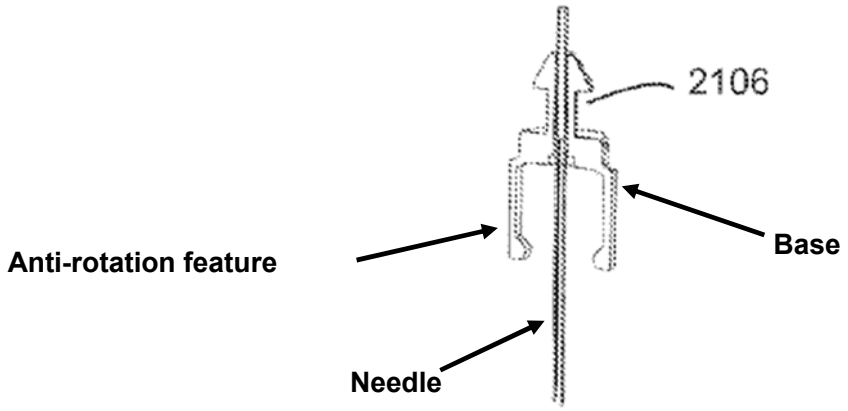


Fig. 21C

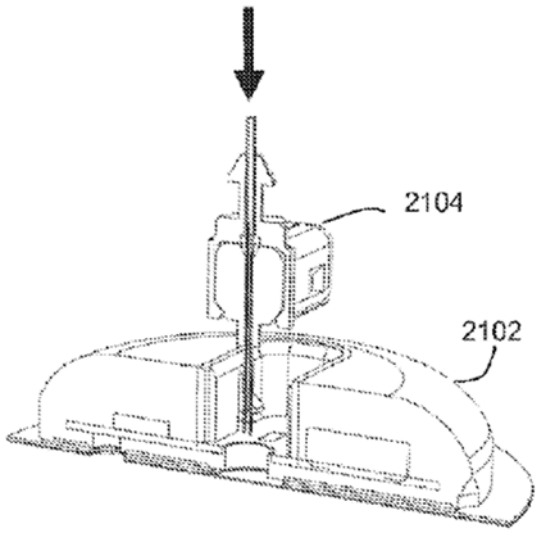


FIG. 21A

In this embodiment, the two arms are configured such that as soon as the base of the needle hub is disposed within the sensor assembly, rotation of the base within the aperture in fact is prevented. To achieve the anti-rotation function, D1 in [0123] provides that the sensor assembly gripper 2106 comprises a snap fit that grabs and orients the sensor assembly. In this way, it is ensured as per **feature 2.2** that the base of the needle hub cannot rotate within the aperture as it forms part of the sensor assembly.

> ***[0123]*** *FIGS. 21A-21C illustrate an alternative hand-off approach. In this embodiment, a sensor assembly gripper 2106, with a light snap fit, grabs and orients the sensor assembly 2104 for connection to the electronics assembly 2102. After the sensor assembly 2104 is firmly snapped into the electronics assembly 2102, the sensor assembly gripper 2106 is retracted with an amount of force that overcomes its grip. Such an approach offers simplicity*

*by reducing the number of parts required (given that the snap features may be incorporated in the needle hub/boss).*

German version:

*[0123] FIG. 21A-21C zeigen eine alternative Variante. In dieser Ausführungsform greift ein Greifer der Sensoreinheit 2106 mit leichtem Schnappverschluss die Sensoreinheit 2104 und richtet sie für die Verbindung mit der Sensoranordnung 2102 aus. Nachdem die Sensoreinheit 2104 fest in die Sensoranordnung 2102 eingerastet ist, wird der Greifer der Sensoreinheit 2106 mit einer Kraft zurückgezogen, die seinen Griff übersteigt. Ein solcher Ansatz bietet ein Einfaches Verfahren, indem die Anzahl der Teile reduziert werden (da die Schnappfunktionen in die Nabe/Ansatz der Lanzette integriert werden können).*

Finally, the needle hub shown in figure 23C is coupled with a needle as an insertion element, as construed by plaintiff, which satisfies **feature 2.3**.

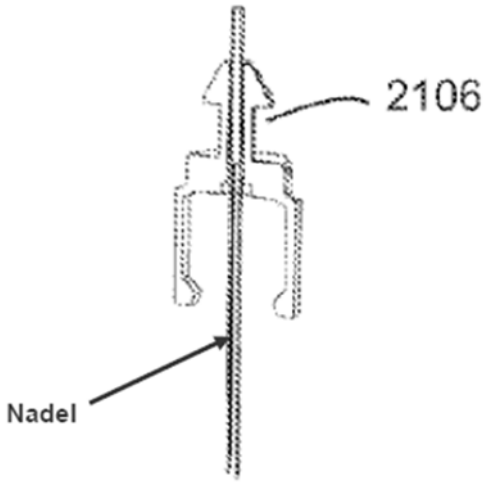


Fig. 23C

## 2. Lack of novelty based on the embodiment in figures 35 and 47C of D1

D1 discloses a further variant of an embodiment which incorporates all features of the Patent and therefore anticipates the Patent's purported novelty as well.

In keeping with **feature 1**, figure 47C shows a sensor assembly (on body device 4714) that is applied to the patient's skin.

TaylorWessing

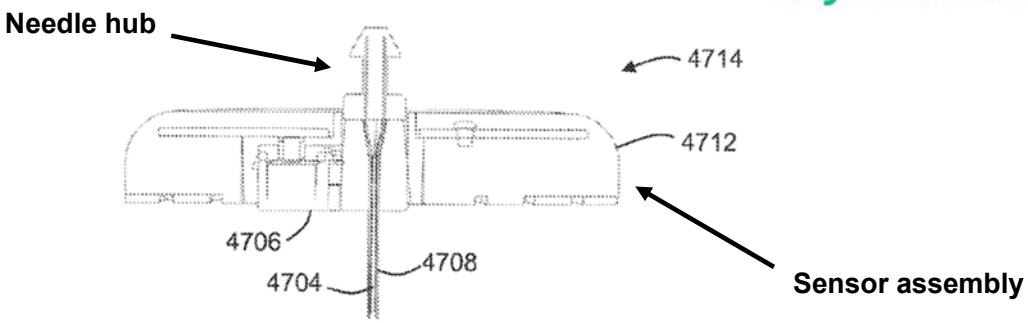


FIG. 47C

Figures 35A and 35B further show a detailed view of a needle hub as per **feature 2**.

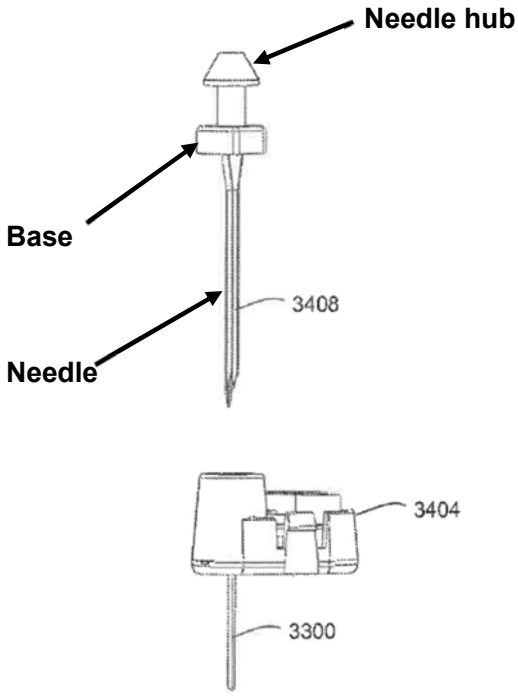


FIG. 35A

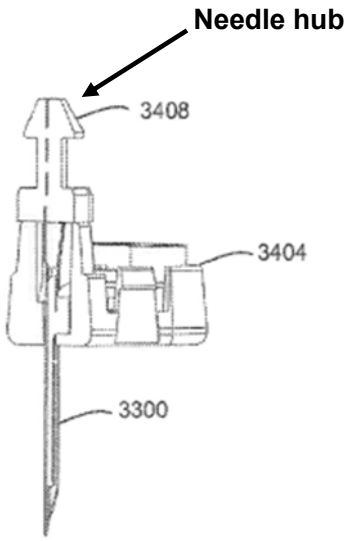


FIG. 35B

The needle hub in turn is disposed within the sensor assembly in such a way as to, in accordance with the plaintiff's construction, be involved in the application of the sensor assembly to the skin as claimed by **feature 2**. This follows from the fact that the needle hub forms part of the sensor assembly and the applicator (see figure 47C, 10L and [0149]):

TaylorWessing

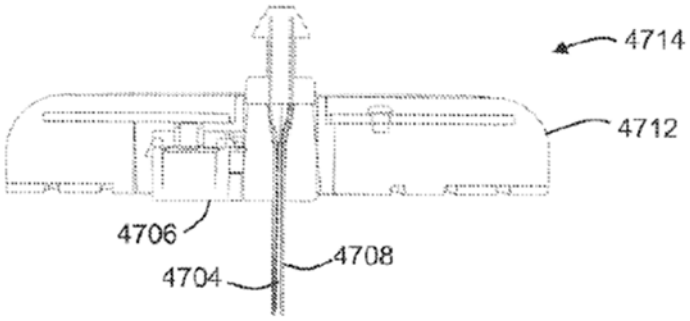


FIG. 47C

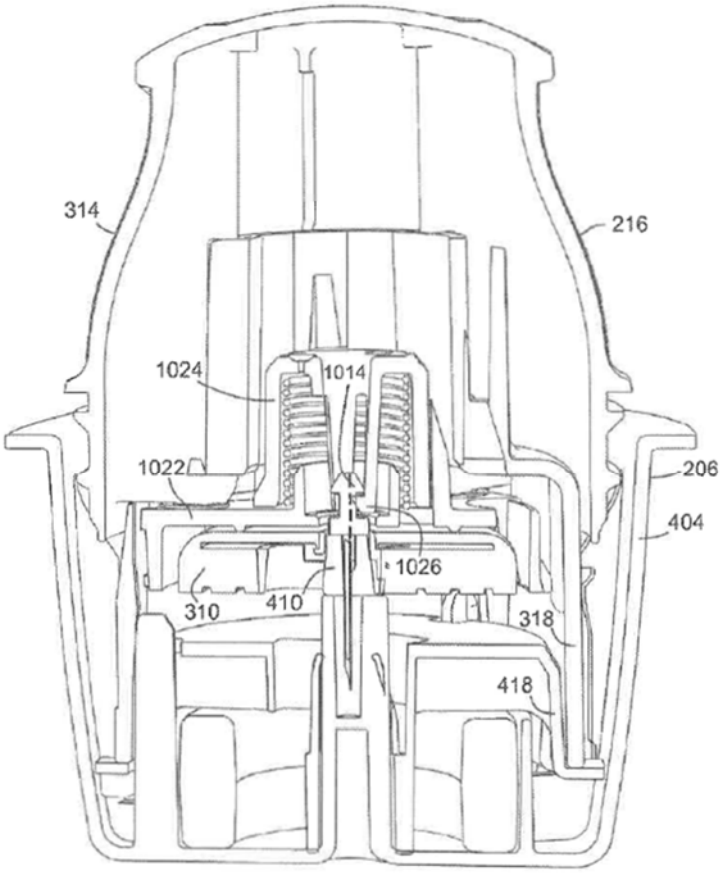


FIG. 10L

D1 further discloses that the needle hub comprises a base, as figure 35A below illustrates:

TaylorWessing

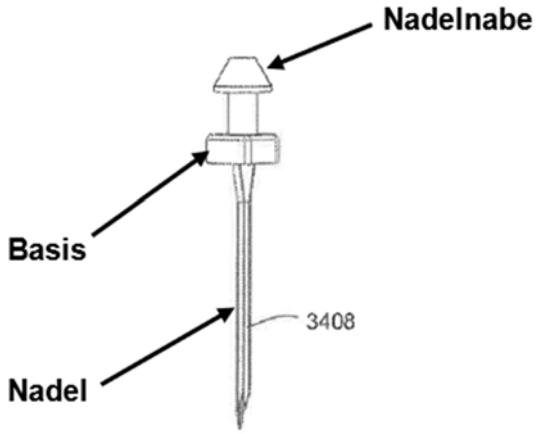


Fig. 35A

Figure 47C shows that the base (green) is at least partially disposed in the aperture of the sensor assembly. The aperture of the sensor assembly further is adapted for sensor and needle insertion (see also [0149]). Thus, the embodiment comprises a base that fulfils the requirements of **feature 2.1**.

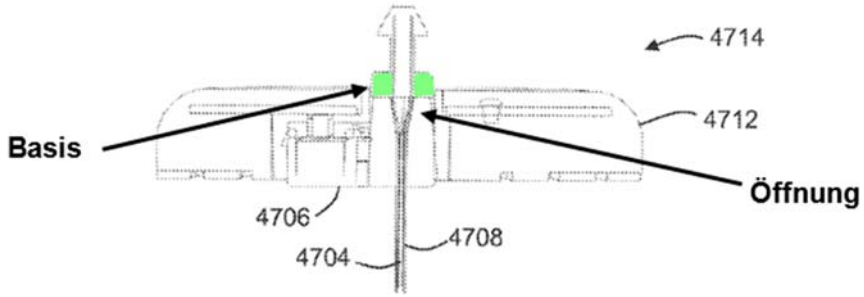


*FIG. 47C*

Lastly, D1 also discloses an anti-rotation feature that meets the criteria of **feature 2.2**. As shown in figure 35A by double vertical lines and in figure 35C by the different cross-sectional radiuses (black double arrows) on the left and right-hand sides of the base of the needle hub, the otherwise cylindrical base of the needle hub has a cut-out adapted to block rotational movement of the needle hub about its longitudinal axis, which therefore is an anti-rotation feature:

TaylorWessing

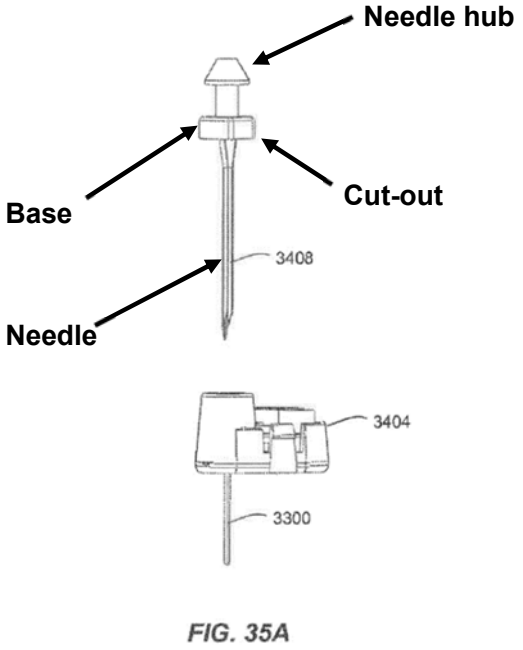


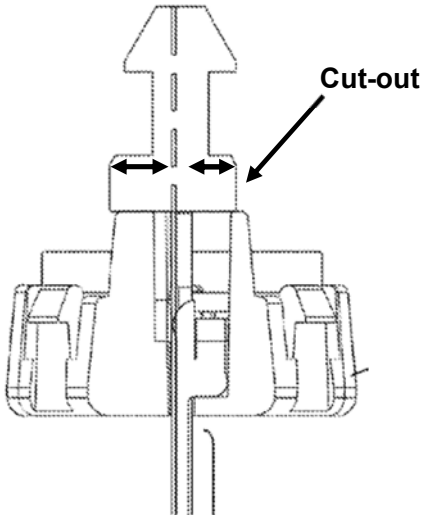


Fig. 35C

Due to this special geometry, the base of this embodiment is objectively suitable to prevent rotation of the base within the aperture if a complementary counterpart to the cut-out is present. Based on the principles discussed in B.I.3.a., an objective standard has to be applied to identify an anti-rotation feature. The vital point is that this embodiment is objectively suitable to fulfil the anti-rotation function. A complementary counterpart is not claimed and the disclosed cut-out therefore objectively fulfils the requirements for the anti-rotation feature specified in claim **feature 2.2**.

Figures 35A and 35B of D1 disclose how the anti-rotation feature may also be effective during manufacture in compliance with the principles described in B.I.3.b.:

TaylorWessing

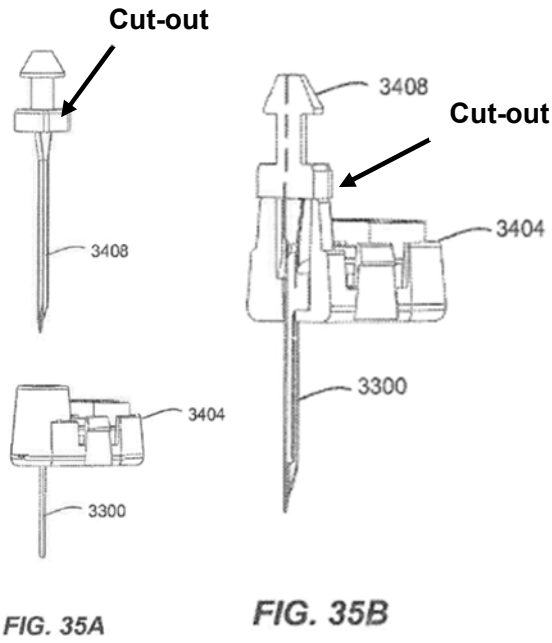


FIG. 35A FIG. 35B

The anti-rotation feature, disclosed as of a cut-out, during assembly facilitates correctly aligning the insertion element with a view to the sensor assembly and joining it with the sensor assembly in the correct position.

Figure 35A further demonstrates that the embodiment comprises a needle used to insert the sensor under the patient's skin. Thus, the needle hub is coupled with the insertion element as claimed by **feature 2.3**:

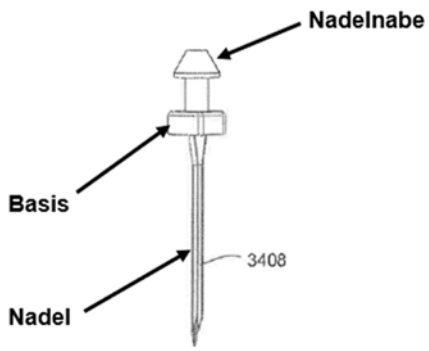


The embodiment shown in figures 35 and 47C fully anticipates the novelty of the Patent's teaching.

TaylorWessing

### 3. Prior use in the FreeStyle Libre

Furthermore, the needle hub of Fig. 35A with Fig. 47C of D1 also corresponds exactly to the technical configuration of the needle hub which was actually implemented in the defendant's "FreeStyle Libre" product.

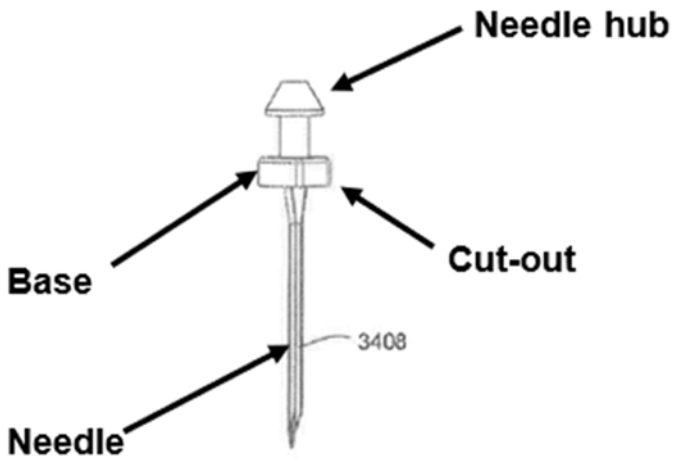


Fig. 35A of D1

As already stated above, the cut-out is adapted, and thus configured, to prevent rotation of the base within the aperture as claimed. The cut-out implemented in the defendant’s "FreeStyle Libre" product was also effective during manufacture of the sensor assembly as stated in the patent-in-suit in para. [0292] and [0293]. Evidence for the design of the needle hub in the defendant’s product “FreeStyle Libre” as it was manufactured and sold before the priority date of the Patent, can be provided by Mr. Lou Pace, who was involved in the design and manufacturing at that time in a key position.

**Evidence:** Witness testimony by Mr. Lou Pace, to be called via the defendant.

Moreover, the defendant's "FreeStyle Libre" product has thus also been commercially offered and distributed in Germany since January 2016 - and thus long before the priority date of the patent-in-suit - as can be seen from the product brochure, which were published in January 2016 and are provided as

**Exhibits 8 and 9.**

Moreover, the distribution of the "FreeStyle Libre" in Germany since January 2016 can be confirmed by Mr. Ansgar Resch, who was involved in organizing the distribution in Germany in a relevant position at that time.

**Evidence:** Witness testimony by Mr. Ansgar Resch, to be called via the defendant.

This results not only in a full anticipation of D1 for the Patent's teaching, but also in the creation of a right of prior use of the defendant in Germany pursuant to Sec. 12 PatG.

**II.**
**Lack of novelty over D2 (US 2012/0197098 A1 – "*Donnay*")**

Published on 2 August 2012, the cited prior art document D2 forms part of the state of the art under Art. 54(2) EPC and anticipates the purported novelty of the Patent's teaching (see also action for revocation of the Patent, Exhibit 6 page 23 to 28).

D2 discloses an apparatus for inserting a medical device into the skin of a patient, with a particular focus on continuous glucose monitoring devices (see [0006]).

In keeping with **feature 1**, D2 in figures 160 and 164 shows a sensor assembly (on body housing 4320) that can be applied to the patient's skin:

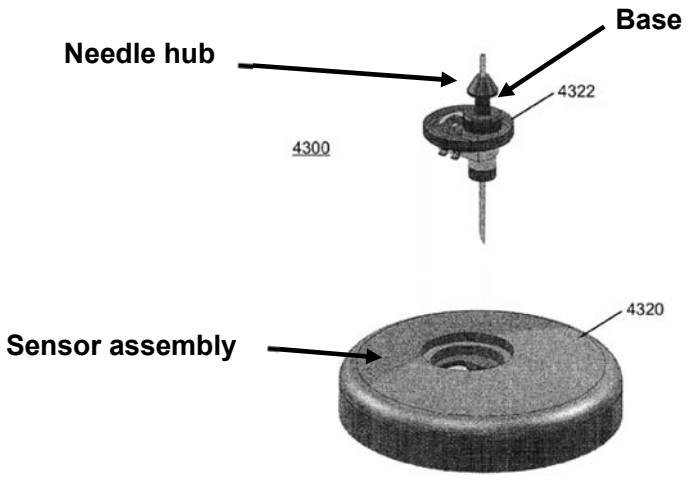


FIG. 160

TaylorWessing

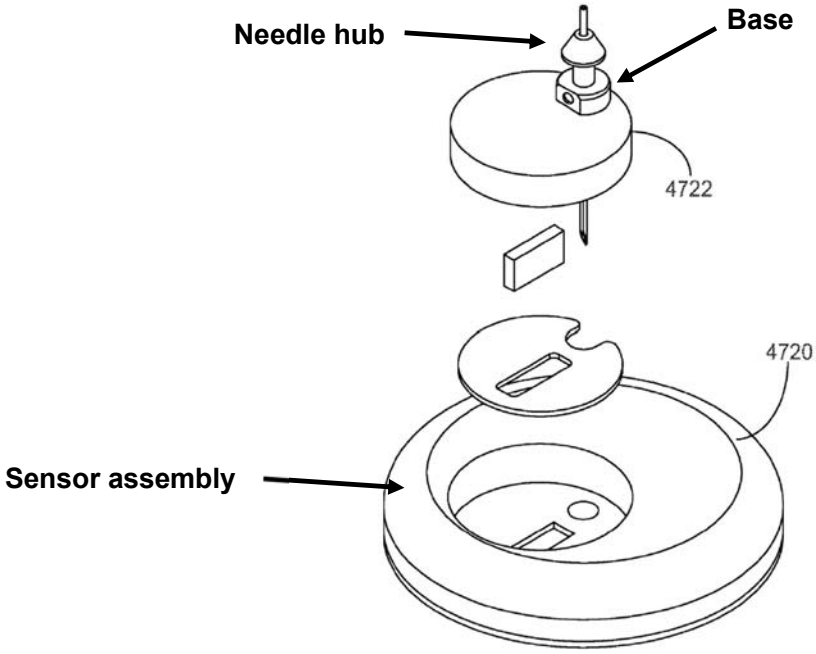


Fig. 164

Figures 160 and 164, shown above, further disclose a needle hub (needle holder) as claimed by **feature 2**.

Furthermore, the needle hub is configured to be involved in the application of the sensor assembly to the patient's skin as claimed by **feature 2** if the plaintiff's construction is applied, which is illustrated in figures 53 and 54 and described in [0208] and [0209]:

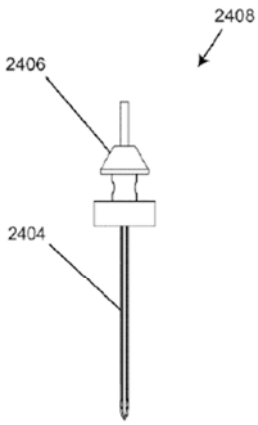


FIG. 53

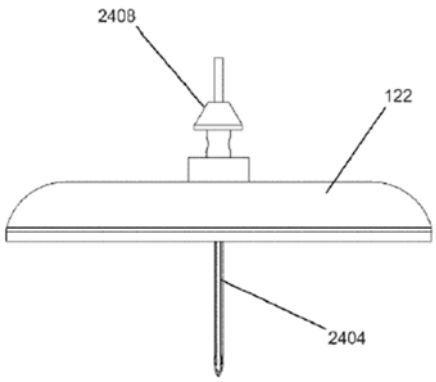


FIG. 54

***[0208]*** *A more detailed view of needle holder 2408 is shown in FIG. 53. Needle holder 2408 retains needle 2404 in a fixed position with respect to itself within inserter 2400, thereby allowing it to safely penetrate a subject's skin during later use.*

***[0209]*** *To assemble inserter 2400, needle 2404 and hub 2408 are inserted through an opening in on body housing 122 as shown in FIG. 54. Needle holder 2408 prevents needle 2404 from being fully inserted through on body housing 122. In some embodiments, on body housing 122 includes an analyte sensor 14 and on body electronics 1100.*

German version:

*[0208] Eine detailliertere Ansicht des Nadelhalters 2408 ist in FIG. 53 dargestellt. Der Nadelhalter 2408 hält die Lanzette 2404 in einer festen Position in Bezug auf sich selbst innerhalb des Applikators 2400, so dass sie bei der späteren Verwendung sicher in die Haut eines Patienten eindringen kann.*

*[0209] Um den Applikator 2400 zusammenzubauen, werden die Lanzette 2404 und die Nadelnabe 2408 durch eine Öffnung in die Sensoranordnung 122 eingesetzt, wie in FIG. 54 gezeigt. Der Nadelhalter 2408 verhindert, dass die Lanzette 2404 vollständig durch die Sensoranordnung 122 eingeführt wird. In einigen Ausführungsformen enthält die Sensoranordnung 122 einen Analysesensor 14 und eine Elektronik 1100.*

D2 in [0208] explains that the needle hub retains the needle in a fixed position within the applicator and in this way allows the device to safely insert the needle into the patient's skin.

The embodiment disclosed in D2 further provides that the needle hub comprises a base as per **feature 2.1**, as figure 164 below shows:

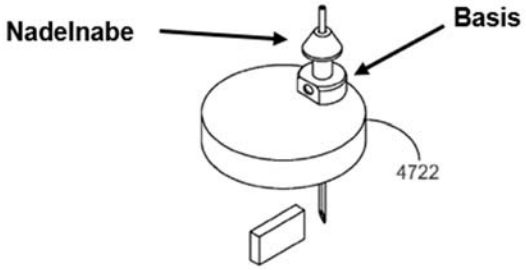


Fig. 164

The base of the needle hub is configured to be at least partially disposed in an aperture of the on-skin sensor assembly, **feature 2.1**.

D2 in [0209] provides that the needle 2404 and the needle holder 2408 are inserted through an opening provided for them in the sensor assembly (on body housing) to assemble the applicator

(inserter 2400). On the basis of the principles addressed in B.I.2., **feature 2.1** also captures temporary or fractional arrangements that for example may occur during the assembly of the applicator.

> *[0209] To assemble inserter 2400, needle 2404 and hub 2408 are inserted through an opening in on body housing 122 as shown in FIG. 54. Needle holder 2408 prevents needle 2404 from being fully inserted through on body housing 122. In some embodiments, on body housing 122 includes an analyte sensor 14 and on body electronics 1100.*
>
> German version:
>
> [0209] Um den Applikator 2400 zusammenzubauen, werden die Lanzette 2404 und die Nadelnabe 2408 durch eine Öffnung in die Sensoranordnung 122 eingesetzt, wie in FIG. 54 gezeigt. Der Nadelhalter 2408 verhindert, dass die Lanzette 2404 vollständig durch die Sensoranordnung 122 eingeführt wird. In einigen Ausführungsformen enthält die Sensoranordnung 122 einen Analysesensor 14 und eine Elektronik 1100.

Figures 160 and 164 further show how the sensor hub 4322 is inserted through an opening intended for it in the sensor assembly (housing unit 4320), wherein the base of the needle hub remains within the aperture of the sensor assembly as per **feature 2.1**:

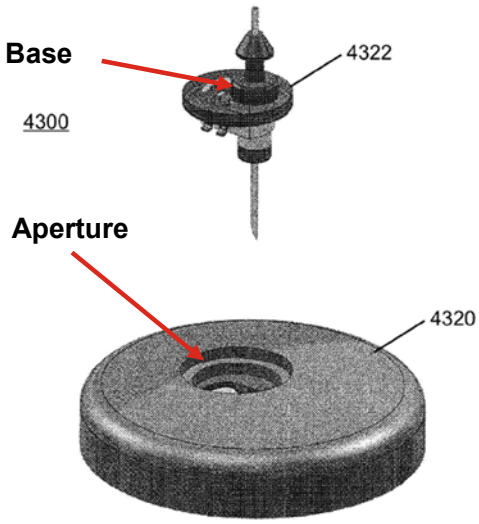


FIG. 160

TaylorWessing

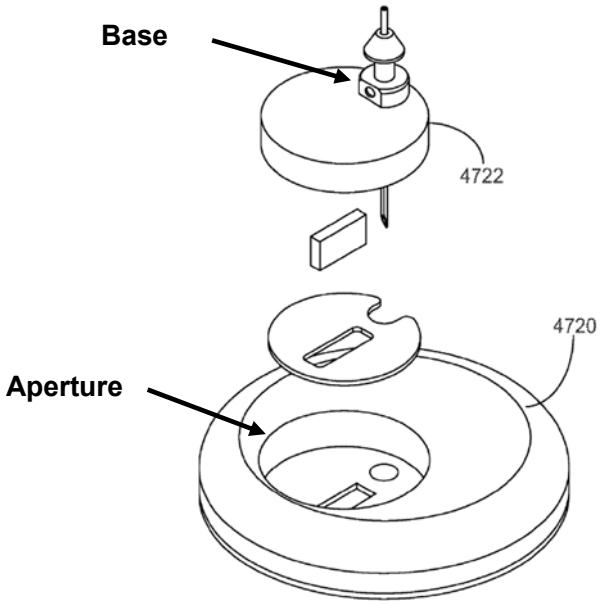


Fig. 164

The above figures 160 and 164 also show that the aperture of the sensor assembly is adapted for sensor and needle insertion as claimed by **feature 2.1**.

D2 further discloses an anti-rotation feature of the base of the needle hub in keeping with **feature 2.2** of the Patent. Figures 160 and 164, copied in below, depict a cut-out at the base of the needle hub that is adapted to block rotational movement of the needle hub about its longitudinal axis, which therefore is an anti-rotation feature:

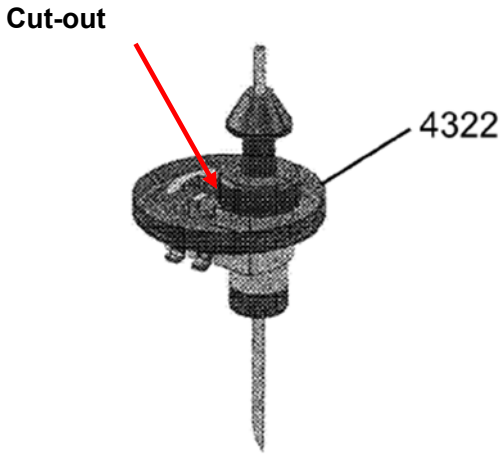


Fig. 160

TaylorWessing

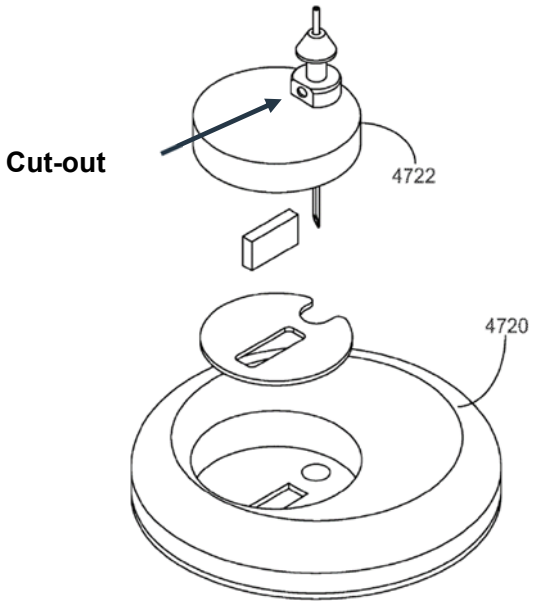


Fig. 164

As discussed above, the Patent does not define any requirements for the design and location of the anti-rotation feature and also encompasses cut-outs such as the one considered here. The Patent does not specify where or in which form the anti-rotation feature shall be provided at the base. Furthermore, the cut-out disclosed in D2 is objectively suitable to prevent rotation of the base within the aperture if a complementary counterpart is provided. The Patent does not require that the anti-rotation function is actually used by the anti-rotation feature in this embodiment.

Finally, figure 160 discloses that the needle hub is configured to couple with the insertion element – the needle – as claimed by **feature 2.3**.

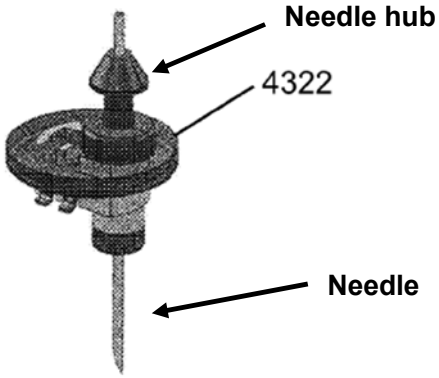


Fig. 160

TaylorWessing

D2 fully anticipates the purported novelty of the teaching of Patent claim 1.

## III.
## Lack of inventive step

Should the court – contrary to expectations – confirm novelty of the Patent, we submit that in particular the anti-rotation feature of Patent **feature 2.2** does not involve an inventive step (see also action for revocation of the Patent, Exhibit 6 page 28 to 35).

### 1. Lack of inventive step over D1

Even if one were to – incorrectly – assume that **feature 2.2** of the Patent requires the anti-rotation feature to prevent rotation of the needle hub within the aperture of the sensor assembly when the needle hub and the sensor assembly are in contact with the patient's skin, the result still would be the same. Even on the basis of this (albeit inadmissible) feature construction, the embodiment in figure 21 of D1 discloses **feature 2.2** (see D.I.1.). Moreover, Patent claim 1 at least would be obvious from the example shown in figure 35 of D1 (see D.I.2.), alone or alternatively in combination with D4.

As submitted above in the novelty discussion, D1 in the embodiment shown by figure 35 (see D.I.2.) discloses a needle hub and an on-skin sensor assembly comprising **features 1, 2, 2.1 and 2.3**. Figure 35 also discloses the anti-rotation feature at the needle hub claimed by **feature 2.2** (see D.I.2.).

Based on the extended interpretation of feature 2.2 presumed above, Patent claim 1 would be distinct from the disclosure of the embodiment of figure 35 in that the sensor assembly is configured such that the anti-rotation feature prevents rotation of the base of the needle hub within the aperture of the sensor assembly when the needle hub and the sensor assembly are in contact with the skin of the patient. This distinguishing feature would solve the technical problem of preventing rotation of the needle hub within the aperture of the sensor assembly when the needle hub and the sensor assembly are in contact with the patient's skin.

As the base of the needle hub of D1 comprises an anti-rotation feature, it is obvious to the skilled person to adapt the assembly (by appropriate sensor assembly design or by means of an insertion aid) such that, by means of the present anti-rotation feature, rotation of the needle hub within the aperture of the sensor assembly is prevented when the needle hub and sensor assembly are in contact with the patient's skin. The Patent claim does not require a specific configuration of the anti-rotation mechanism.

TaylorWessing

## 2. Lack of inventive step over D1 combined with D3

Furthermore, the document D3 by the same applicant as D1, concerning a needle hub and an on-skin sensor assembly for monitoring a glucose level just like D1, discloses the following in figure 52 and the related description in column 30, lines 29-34:

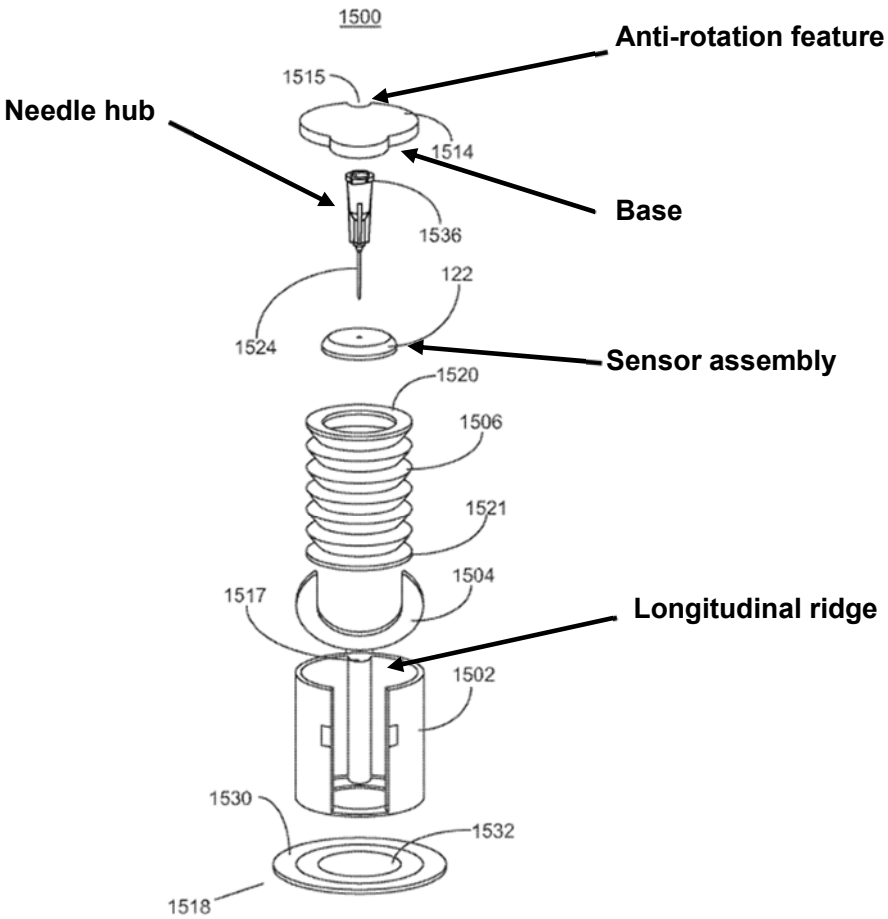


FIG. 52

*A button 1514 provides the capability of the user to insert on body housing 122 into the skin of the subject. Button 1514 may be fabricated from plastic and may further include anti-rotation features, e.g., recess 1515 which glides along longitudinal ridge 1517, restricting motion to the desired longitudinal axis.*

German version:

Ein Knopf 1514 ermöglicht es dem Benutzer, die Sensoranordnung 122 in die Haut des Patienten einzuführen. Der Knopf 1514 kann aus Kunststoff hergestellt sein und kann

außerdem ein Drehsicherungsmerkmal aufweisen, z. B. eine Aussparung 1515, die entlang der Längsrippe 1517 gleitet und die Bewegung auf die gewünschte Längsachse beschränkt.

Thus, D3 discloses a needle hub 1536 and a sensor assembly (on body housing 122), wherein a housing 1502 comprising a longitudinal ridge 1517 is provided for guiding the needle hub and an anti-rotation feature 1515 of the needle hub prevents rotation of the needle hub when it is in contact with the skin of the patient. Although D3 provides that the anti-rotation feature is disposed in the cap of the needle hub rather than at the lower part of the needle hub, this is merely a trivial variation of the anti-rotation feature. As discussed above in B.I.3.b., the Patent does not define any requirements whatsoever for the location and design of the anti-rotation feature, as long as it is objectively suitable to prevent rotation of the base within the aperture.

In view of this background, the skilled person would be encouraged by the information in D3 to complement the anti-rotation feature in the needle hub already known from D1 by providing the housing with a correspondingly shaped opening to prevent rotation of the needle hub within the opening of the sensor arrangement.

The Patent claim thus is obvious from the embodiment shown in figure 35 of D1 combined with D3.

**3. Lack of inventive step over D1 combined with D4**

Alternatively, the solution to the above described problem is obvious to the skilled person from a combination of D1 with D4 concerning systems for delivering fluids such as insulin to the human body.

In the co-pending infringement action based on EP 3 766 408 before the Hamburg District Court (case no. 327 O 56/23) also concerning a applicator for positioning a sensor unit on the skin of a patient, the plaintiff itself referred to the document D4. In the statement of defense in that case, the plaintiff takes the view that a skilled person seeking to solve the problem of maintaining the sensor unit in position within the applicator prior to application to the skin, clearly would arrive at D4. The plaintiff argued as follows in the parallel case (statement of defense, page 75, D4 = “D21”):

> *“Based on D 14 [WO 2010/091005 A1], the skilled person faces the problem of ensuring that the sensor unit is held securely until it is used, since some time may elapse between the manufacture of the device and the use of the device taught in D14 (D 14, p. 28, line 14 ff.) and the sensor unit must be held in position during this time to ensure its safe use. To solve this problem, it was obvious for the person skilled in the art to consider D 21 [referred to as D4 here], since it deals with a device for administering liquids, such as insulin (cf. D 21, para. [0064]).”*

TaylorWessing

D4 discloses a needle hub (insertion device hub 74) comprising rotation restricting protrusions 71, which engages complementary rotation-restricting recesses 73 on the body 20, preventing rotation of the needle hub relative to the body 20. The anti-rotation feature is disclosed in figures 2A and 3 as shown below:

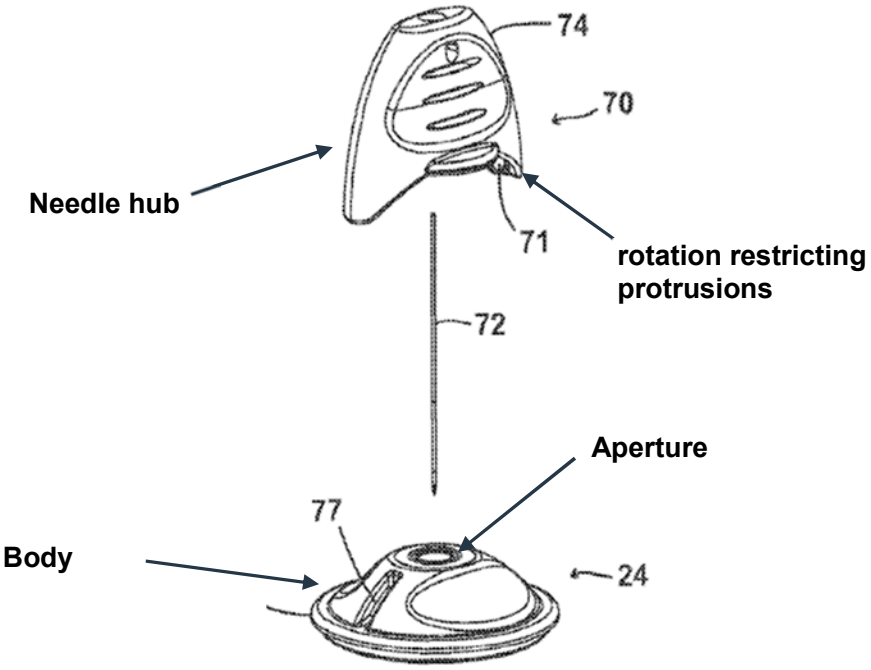


Fig. 2A

TaylorWessing

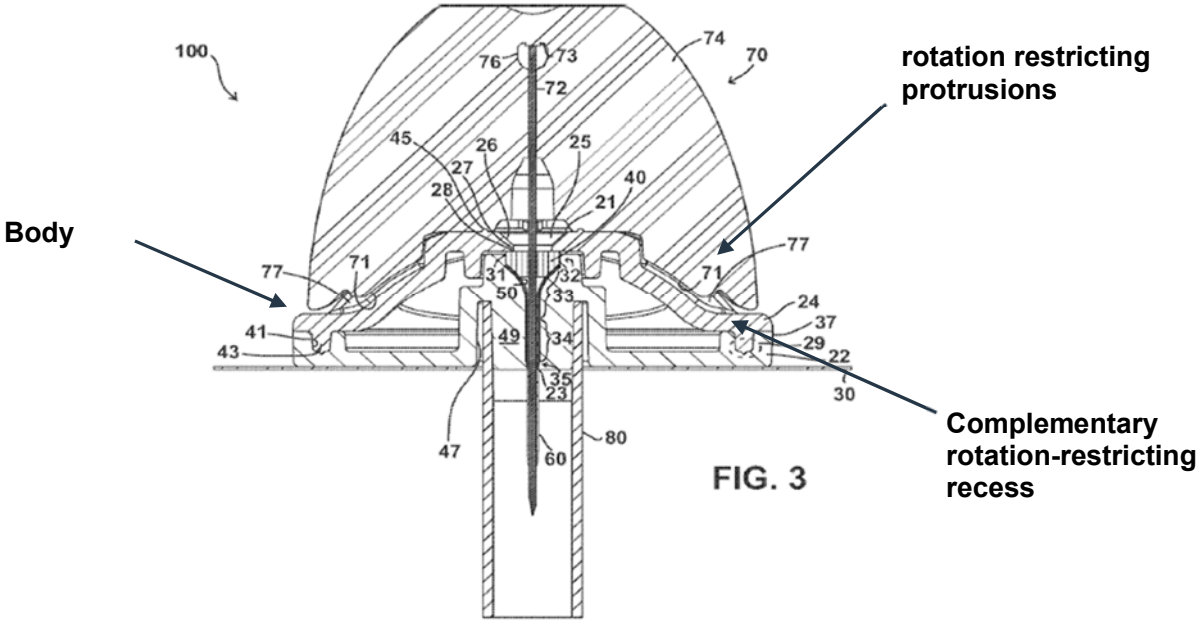


FIG. 3

The figures are described as follows in [0069]:

> ***[0069]*** *Body 20 and insertion device 70 may be configured such that insertion device 70 cannot rotate with respect to body 20 when fully inserted in body 20. One manner of achieving this configuration comprises providing hub 74 with rotation-restricting protrusions 71, which extend in a downstream or downward direction from the main portion of insertion device hub 74, and by providing cap element 24 of body 20 with rotation-restricting recesses 77. When insertion device 70 is fully inserted in body 20, as shown in FIG. 3, at least a portion of each protrusion 71 extends into each recess 77 such that the recess side walls interfere with the protrusions to prevent rotation of the insertion device relative to body 20. Although the embodiment shown includes two protrusions and two recesses, other embodiments may include fewer or greater numbers of each.*

German version:

[0069] Das Gehäuse 20 und die Einführvorrichtung 70 können so konfiguriert sein, dass sich die Einführvorrichtung 70 nicht in Bezug auf das Gehäuse 20 drehen kann, wenn sie vollständig in das Gehäuse 20 eingeführt ist. Eine Möglichkeit, um diese Konfiguration zu erreichen, besteht darin, die Nadelnabe 74 mit einem Drehsicherungsmerkmal 71 zu versehen, das sich vom Hauptteil der Nadelnabe 74 der Einführvorrichtung abwärts oder nach unten erstreckt und das Kappenelement 24 des Gehäuses 20 mit rotationsverhindernde Aussparungen 77 zu versehen. Wenn die Einführvorrichtung 70 vollständig in das Gehäuse 20 eingeführt ist, wie FIG. 3 zeigt, erstreckt sich zumindest ein Teil jedes Vorsprungs 71 in jede Aussparung 77, so dass die Seitenwände der Aussparung mit den Vorsprüngen ineinandergreifen, um eine Drehung der Einführvorrichtung relativ zum Gehäuse 20 zu verhindern. Obwohl die gezeigte Ausführungsform zwei Vorsprünge und zwei Aussparungen aufweist, können andere Ausführungsformen eine geringere oder größere Anzahl von Vorsprüngen und Aussparungen aufweisen.

As a result, the anti-rotation feature disclosed in **feature 2.2** at least does not involve an inventive step as the skilled person would transfer the protrusions for preventing rotation of the hub 74 disclosed in D4 to a CGM device. The skilled person would be encouraged by the information in D4 to provide in the housing of the sensor assembly a counterpart complementary to the anti-rotation feature to prevent rotation of the needle hub within the aperture of the sensor assembly when the needle hub and the sensor assembly are in contact with the patient's skin. In this way, the skilled person reaches the subject matter of feature 2.2 of the Patent (based on the incorrect extended interpretation).

The Patent claim thus is obvious from the embodiment shown in figure 35 of D1 combined with D4.

For the further details of the inventive step discussion, we refer to the statement of claim in the revocation proceedings against the Patent.

**E. *In the extreme alternative*: ordering an adequate security for enforcement**

*In the extreme alternative*, and only for the event that the court (partly) finds for the plaintiff and refuses to stay the proceedings, which we do not expect, we move for the court to fix the security to be provided by the plaintiff prior to enforcing any judgment at a level of no less than EUR 500 million. That amount is required to sufficiently cover the defendant's potential loss.

Dr. Dietrich Kamlah
Rechtsanwalt
*Signed electronically*

**Exhibits TW 1 - 9**