US008941331B2

(12) **United States Patent**
Roberts et al.

(10) **Patent No.: US 8,941,331 B2**
(45) **Date of Patent: Jan. 27, 2015**

(54) **SOLID STATE LIGHTING PANELS WITH VARIABLE VOLTAGE BOOST CURRENT SOURCES**

(71) Applicant: **Cree, Inc.**, Durham, NC (US)

(72) Inventors: **John K. Roberts**, Grand Rapids, MI (US); **Keith J. Vadas**, Lake Worth, FL (US); **Muhinthan Murugesu**, Morrisville, NC (US)

(73) Assignee: **Cree, Inc.**, Durham, NC (US)

(*) Notice: Subject to any disclaimer, the term of this patent is extended or adjusted under 35 U.S.C. 154(b) by 0 days.

(21) Appl. No.: **13/896,977**

(22) Filed: **May 17, 2013**

(65) **Prior Publication Data**

US 2013/0249408 A1 Sep. 26, 2013

Related U.S. Application Data

(63) Continuation of application No. 13/469,188, filed on May 11, 2012, now Pat. No. 8,461,776, which is a continuation of application No. 12/977,422, filed on Dec. 23, 2010, now Pat. No. 8,203,286, which is a

(Continued)

(51) **Int. Cl.**

G05F 1/00	(2006.01)
H05B 33/08	(2006.01)
G09G 3/34	(2006.01)

(52) **U.S. Cl.**

CPC ***H05B 33/0809*** (2013.01); ***H05B 33/0863*** (2013.01); *G09G 2320/0653* (2013.01);

(Continued)

(58) **Field of Classification Search**

USPC ..... 315/291, 307, 224, 246, 185 R, 200 R, 315/312, 308

See application file for complete search history.

(56) **References Cited**

U.S. PATENT DOCUMENTS

3,787,752	A	1/1974	Delay
4,298,869	A	11/1981	Okuno

(Continued)

FOREIGN PATENT DOCUMENTS

EP	1 033 903	9/2000
GB	2 249 840	5/1992

(Continued)

OTHER PUBLICATIONS

U.S. Appl. No. 11/854,744, filed Sep. 13, 2007, Myers.

(Continued)

Primary Examiner — Minh D A

(74) *Attorney, Agent, or Firm* — Myers Bigel Sibley & Sajovec, P.A.

(57) **ABSTRACT**

A lighting system includes a lighting panel having a string of solid state lighting devices and a current supply circuit having a voltage input terminal, a control input terminal, and first and second output terminals coupled to the string of solid state lighting devices. The current supply circuit is configured to supply an on-state drive current to the string of solid state lighting devices in response to a control signal. The current supply circuit includes a charging inductor coupled to the voltage input terminal and an output capacitor coupled to the first output terminal. The current supply circuit is configured to operate in continuous conduction mode in which current continuously flows through the charging inductor while the on-state drive current is supplied to the string of solid state light emitting devices.

25 Claims, 6 Drawing Sheets

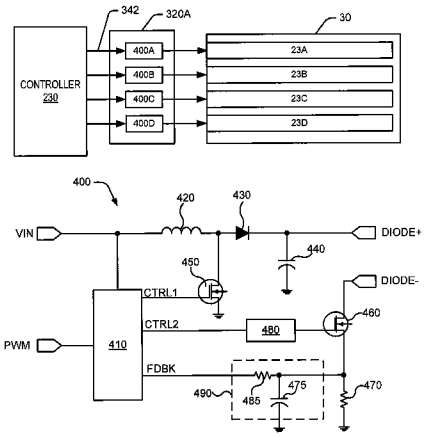

Related U.S. Application Data

continuation of application No. 11/601,504, filed on Nov. 17, 2006, now Pat. No. 7,872,430.

(60) Provisional application No. 60/738,305, filed on Nov. 18, 2005.

(52) **U.S. Cl.**

CPC ***G09G3/3406*** (2013.01); ***H05B 33/0872*** (2013.01); ***H05B 33/0821*** (2013.01); *G09G 2360/145* (2013.01); ***H05B 33/0869*** (2013.01); *G09G 2320/064* (2013.01); ***H05B 33/0803*** (2013.01); ***G09G 3/3413*** (2013.01)

USPC **315/308**

(56) **References Cited**

U.S. PATENT DOCUMENTS

4,685,303	A	8/1987	Branc et al.	
4,859,911	A	8/1989	Kinnard et al.	
4,988,889	A	1/1991	Oughton, Jr.	
5,128,595	A	7/1992	Hara	
5,661,645	A	8/1997	Hochstein	
5,783,909	A	7/1998	Hochstein	
5,812,105	A	9/1998	Van de Ven	
5,877,595	A	3/1999	Nerone	315/209 R
5,949,222	A	9/1999	Buono	
5,973,483	A	10/1999	Jo	
6,016,038	A	1/2000	Mueller et al.	
6,018,220	A	1/2000	Nerone	
6,051,935	A	4/2000	Bucks et al.	
6,076,936	A	6/2000	George	
6,082,870	A	7/2000	George	
6,150,771	A	11/2000	Perry	
6,150,774	A	11/2000	Mueller et al.	
6,153,985	A	11/2000	Grossman	
6,161,910	A	12/2000	Reisenauer et al.	
6,181,079	B1	1/2001	Chang et al.	
6,236,331	B1	5/2001	Dussureault	
6,255,786	B1 *	7/2001	Yen	315/291
6,285,139	B1	9/2001	Ghanem	
6,329,758	B1	12/2001	Salam	
6,329,760	B1	12/2001	Bebenroth	
6,329,764	B1	12/2001	Van de Ven	
6,351,079	B1	2/2002	Willis	
6,359,392	B1	3/2002	He	
6,362,578	B1	3/2002	Swanson et al.	
6,388,393	B1	5/2002	Illingworth	
6,411,046	B1	6/2002	Muthu	
6,416,200	B1	7/2002	George	
6,441,558	B1	8/2002	Muthu et al.	315/149
6,471,716	B1 *	10/2002	Pecukonis	607/89
6,495,964	B1	12/2002	Muthu et al.	
6,507,159	B2	1/2003	Muthu	
6,510,955	B2	1/2003	Pellegrino	
6,510,995	B2	1/2003	Muthu et al.	235/454
6,515,434	B1	2/2003	Biebl	
6,552,495	B1	4/2003	Chang	
6,577,072	B2	6/2003	Saito et al.	
6,577,512	B2	6/2003	Tripathi et al.	
6,578,986	B2	6/2003	Swaris et al.	
6,586,890	B2	7/2003	Min et al.	
6,616,291	B1	9/2003	Love	
6,618,031	B1	9/2003	Bohn, Jr. et al.	
6,621,235	B2	9/2003	Chang	315/216
6,630,801	B2	10/2003	Schuurmans	
6,712,486	B1	3/2004	Popovich et al.	
6,717,559	B2 *	4/2004	Weindorf	345/82
6,788,011	B2	9/2004	Mueller et al.	
6,793,374	B2	9/2004	Begemann	
6,806,659	B1	10/2004	Mueller et al.	
6,836,081	B2	12/2004	Swanson et al.	
6,846,093	B2	1/2005	Swaris et al.	
6,858,994	B2	2/2005	Vollrath	
6,864,641	B2	3/2005	Dygert	
6,870,328	B2	3/2005	Tanabe et al.	315/291
6,888,529	B2 *	5/2005	Bruning et al.	345/102
6,894,436	B2	5/2005	Togashi et al.	
6,909,249	B2	6/2005	Otake	
6,940,189	B2	9/2005	Gizara	307/151
6,965,205	B2	11/2005	Piepgras et al.	
6,975,079	B2	12/2005	Lys et al.	
7,014,336	B1	3/2006	Ducharme et al.	
7,015,654	B1	3/2006	Kuhlmann et al.	
7,038,399	B2	5/2006	Lys et al.	
7,088,334	B2	8/2006	Adachi et al.	
7,102,172	B2	9/2006	Lynch et al.	
7,108,396	B2	9/2006	Swaris et al.	
7,114,831	B2	10/2006	Popovich et al.	
7,122,971	B2	10/2006	Yeh et al.	
7,148,632	B2	12/2006	Berman et al.	
7,180,252	B2	2/2007	Lys et al.	
7,202,608	B2	4/2007	Robinson et al.	
7,213,940	B1	5/2007	Van De Ven et al.	
7,236,148	B2	6/2007	Yoshida et al.	
7,239,087	B2	7/2007	Ball	
7,255,457	B2	8/2007	Ducharme et al.	
7,274,160	B2	9/2007	Mueller et al.	
7,276,861	B1	10/2007	Shteynberg et al.	
7,301,288	B2	11/2007	Green	
7,306,353	B2	12/2007	Popovich et al.	
7,317,287	B2	1/2008	Blumel	
7,323,828	B2	1/2008	Russell et al.	
7,329,024	B2	2/2008	Lynch et al.	
7,387,406	B2	6/2008	Swaris et al.	
7,474,044	B2	1/2009	Ge	
7,557,524	B2	7/2009	Chevalier et al.	
7,569,996	B2	8/2009	Holmes et al.	
7,872,430	B2 *	1/2011	Roberts et al.	315/307
8,203,266	B2 *	6/2012	Egawa et al.	313/544
8,203,286	B2	6/2012	Roberts et al.	315/307
8,461,776	B2 *	6/2013	Roberts et al.	315/291
2001/0024112	A1	9/2001	Jacobs et al.	
2003/0011559	A1	1/2003	Adachi et al.	
2003/0137475	A1	7/2003	Yoshida et al.	
2004/0046510	A1	3/2004	Allen	
2004/0135522	A1	7/2004	Berman et al.	
2004/0135524	A1 *	7/2004	Gunter et al.	315/291
2005/0077838	A1	4/2005	Blumel	
2005/0093473	A1	5/2005	Yeh et al.	
2005/0207196	A1	9/2005	Holmes et al.	
2005/0243556	A1	11/2005	Lynch	
2005/0251698	A1	11/2005	Lynch et al.	
2006/0001381	A1	1/2006	Robinson et al.	
2006/0267028	A1	11/2006	Lynch et al.	
2007/0041220	A1	2/2007	Lynch	
2007/0115248	A1	5/2007	Roberts et al.	
2007/0137074	A1	6/2007	Van De Ven et al.	
2007/0139920	A1	6/2007	Van De Ven et al.	
2007/0139923	A1	6/2007	Negley et al.	
2007/0170447	A1	7/2007	Negley et al.	
2007/0171145	A1	7/2007	Coleman et al.	
2007/0211463	A1	9/2007	Chevalier et al.	
2007/0236911	A1	10/2007	Negley	
2007/0263393	A1	11/2007	Van De Ven	
2007/0267983	A1	11/2007	Van De Ven et al.	
2007/0274063	A1	11/2007	Negley	
2007/0274080	A1	11/2007	Negley et al.	
2007/0278503	A1	12/2007	Van De Ven et al.	
2007/0278934	A1	12/2007	Van De Ven et al.	
2007/0279440	A1	12/2007	Negley	
2007/0279903	A1	12/2007	Negley et al.	
2007/0280624	A1	12/2007	Negley et al.	
2008/0048582	A1	2/2008	Robinson	
2008/0055915	A1	3/2008	Lynch et al.	
2008/0062699	A1	3/2008	Popovich et al.	
2008/0084685	A1	4/2008	Van De Ven et al.	
2008/0084700	A1	4/2008	Van De Ven	
2008/0084701	A1	4/2008	Van De Ven et al.	
2008/0088248	A1	4/2008	Myers	
2008/0089053	A1	4/2008	Negley	
2008/0106895	A1	5/2008	Van De Ven et al.	
2008/0106907	A1	5/2008	Trott et al.	
2008/0112168	A1	5/2008	Pickard et al.	
2008/0112170	A1	5/2008	Trott et al.	

(56) **References Cited**

U.S. PATENT DOCUMENTS

2008/0130285	A1	6/2008	Negley et al.
2008/0136313	A1	6/2008	Van De Ven et al.
2008/0192462	A1	8/2008	Steedly et al.
2008/0259589	A1	10/2008	Van De Ven
2008/0278097	A1	11/2008	Roberts et al.
2009/0184666	A1	7/2009	Myers et al.

FOREIGN PATENT DOCUMENTS

JP	10-233669	9/1998
JP	2001-215913	8/2001
JP	2002-203988	7/2002
JP	2003-513602	4/2003
JP	2003-518714	6/2003
JP	2004-538653	12/2004
JP	2006-242733	9/2006
JP	2006-525664	9/2006
TW	200501039	1/2005
WO	WO 01/33917	5/2001
WO	WO 2004/060023	7/2004
WO	WO 2004/100612	11/2004

OTHER PUBLICATIONS

U.S. Appl. No. 11/755,162, filed May 30, 2007, Negley.
U.S. Appl. No. 11/626,483, filed Jan. 24, 2007, Coleman.
DiLouie, "HID Lamp Dimming: Dimming HID lamps can produce significant energy savings and increase user flexibility", 6 pages http://www.ecmweb.com/mag/electric_hid_lamp_dimming/index.html, (Oct. 1, 2004).
In-Plug® Series: IPS401,"High Efficiency, High Power Factor, Universal High Brightness White LED Controller", ASIC Advantage, Inc., Rev.11, 18 pages, (Apr. 2, 2007).
Perduijn et al., "Light Output Feedback Solution for RGB LED Backlight Applications", SID Digest (2000).
OPTOLED Lighting Gmbh/LED, Product Sheets, http://www.optoled.de/englisch/products/led.html, pp. 1-7, Last Download: Jan. 16, 2009.
Permlight, LED Fixtures: Enbryten Retrofit to Replace Problematic Incandescence, 1 page (Feb. 2005).
International Search Report and Written Opinion (18 pages) corresponding to International Application No. PCT/US07/12708; Mailing Date: Feb. 20, 2008.
International Search Report and Written Opinion (11 pages) corresponding to International Application No. PCT/US07/01834; Mailing Date: Apr. 28, 2008.
Invitation to Pay Additional Fees (7 pages) corresponding to International Application No. PCT/US2007/078368; Mailing Date: Feb. 5, 2008.
International Search Report and Written Opinion (13 pages) corresponding to International Application No. PCT/US2007/078368; Mailing Date: Jul. 4, 2008.
Second PCT Written Opinion (6 pages) corresponding to International Application No. PCT/US07/01834; Mailing Date: Oct. 20, 2008.
U.S. Appl. No. 61/039,926, filed Mar. 27, 2008.
Japanese Office Action (English Translation) Corresponding to Japanese Patent Application No. 2008-541357; Date of Mailing: Jun. 17, 2011; 2 pages.
Taiwanese Office Action corresponding to Taiwanese Patent Application No. 095142943; Issuance Date: Jan. 28, 2013; Foreign Test, 5 pages, English Translation Thereof, 4 pages.
European Office Action corresponding to European Application No. 06 837 857.9, dated Nov. 5, 2012; 5 pages.

* cited by examiner

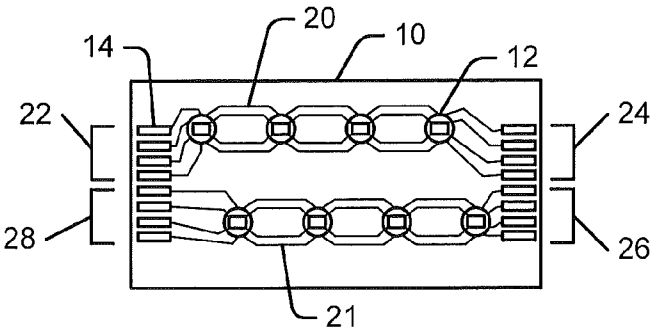

FIGURE 1

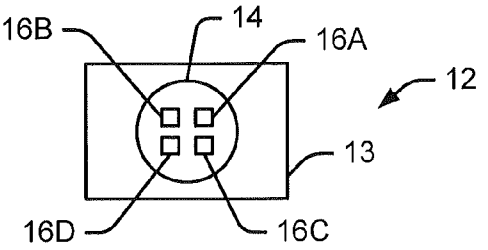

FIGURE 2

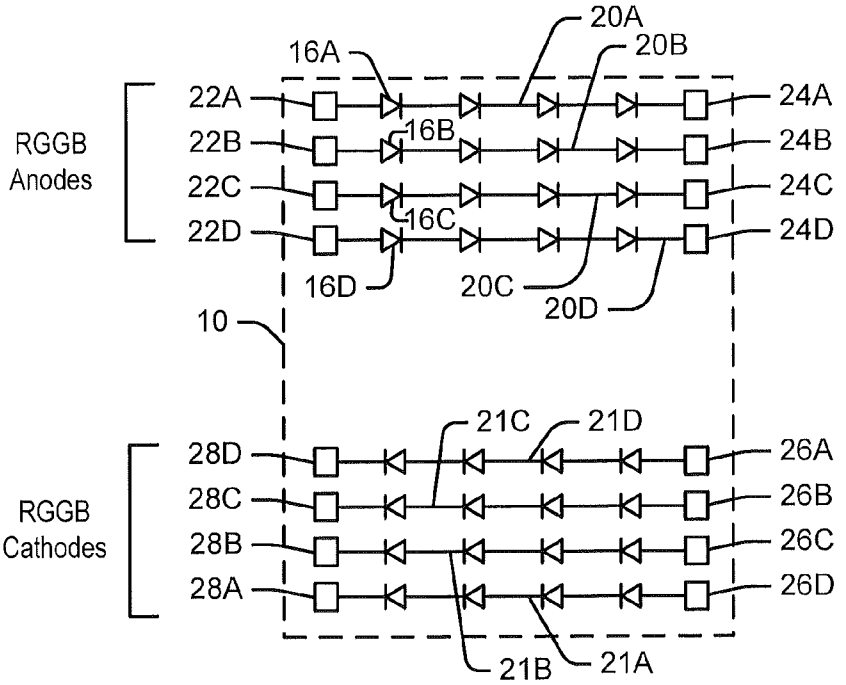

FIGURE 3

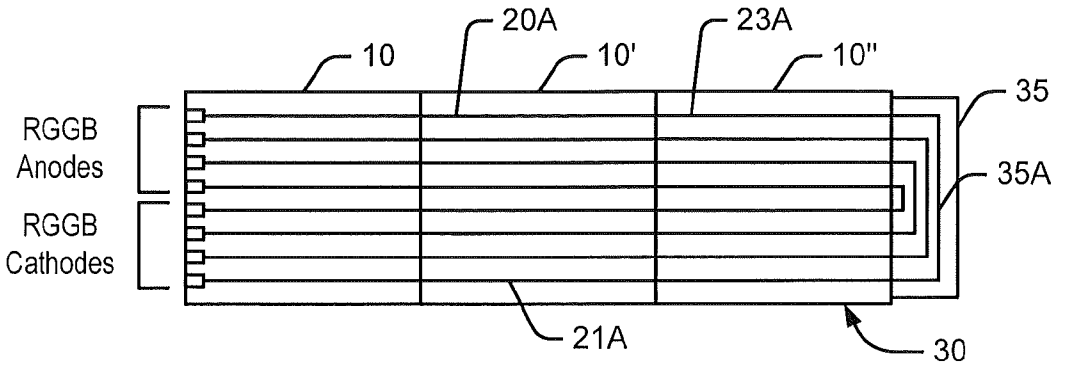

FIGURE 4A

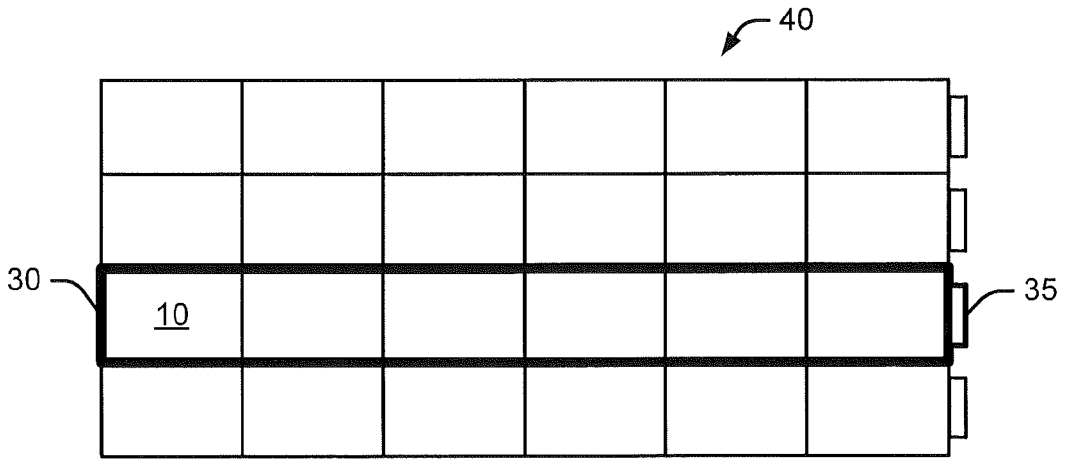

FIGURE 4B

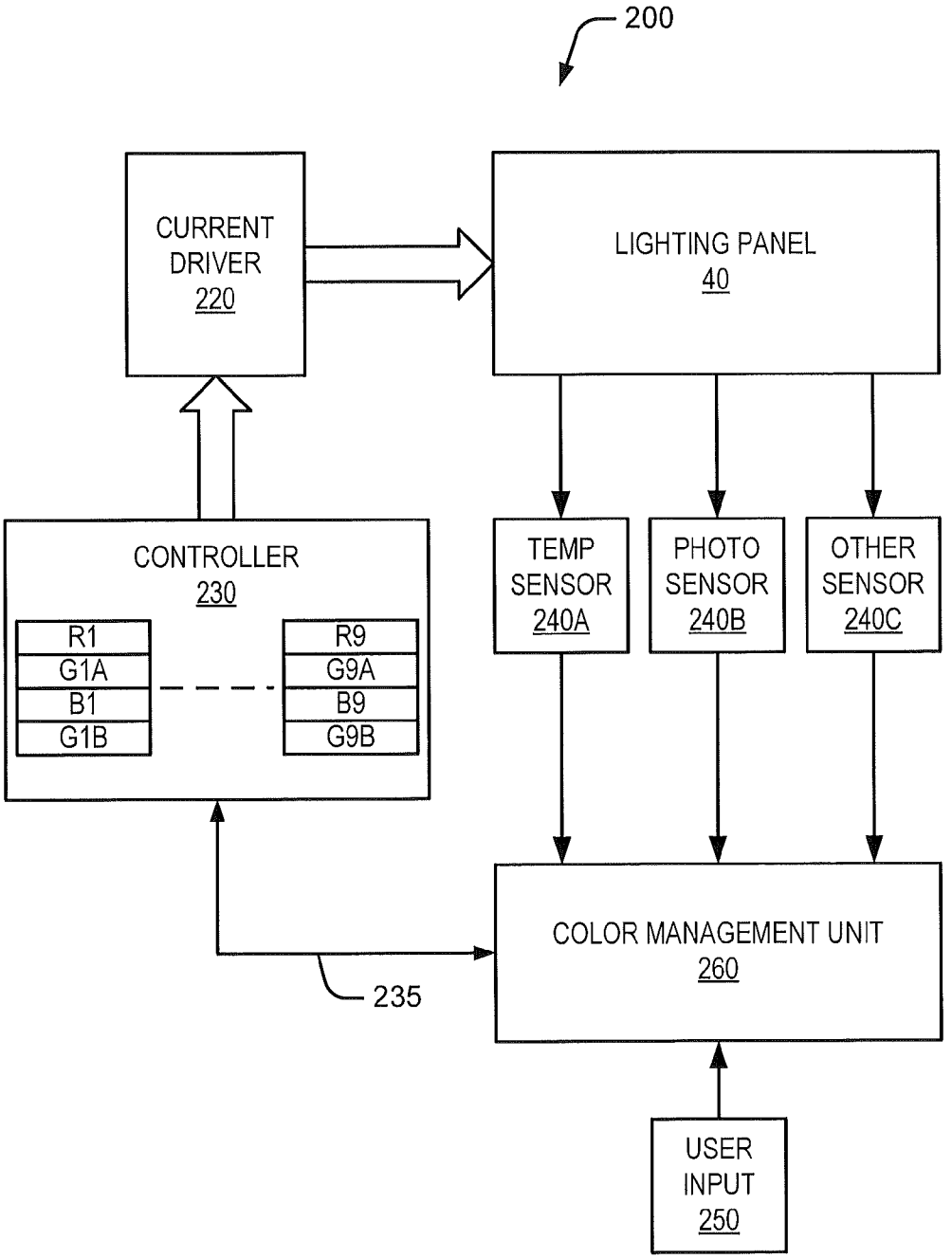
200
CURRENT DRIVER 220
LIGHTING PANEL 40
CONTROLLER 230
R1
G1A
B1
G1B
R9
G9A
B9
G9B
TEMP SENSOR 240A
PHOTO SENSOR 240B
OTHER SENSOR 240C
COLOR MANAGEMENT UNIT 260
235
USER INPUT 250

FIGURE 5

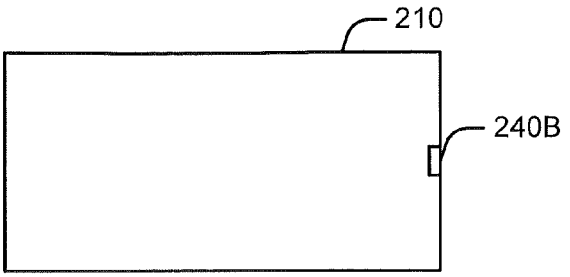

FIGURE 6A

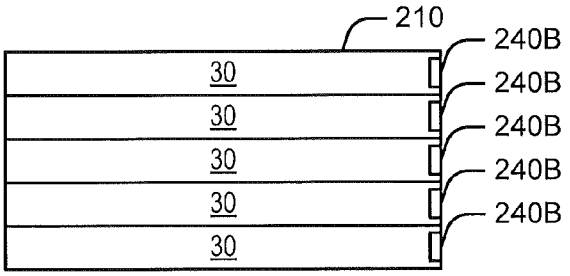

FIGURE 6B

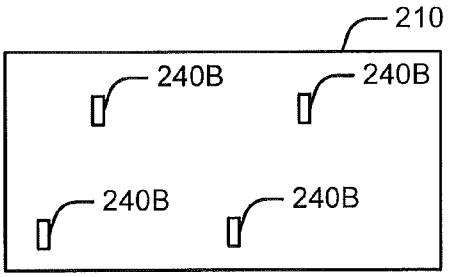

FIGURE 6C

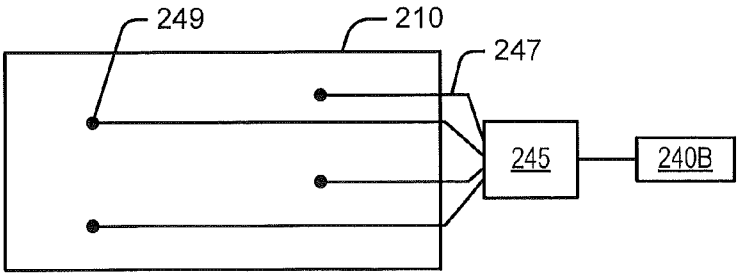

FIGURE 6D

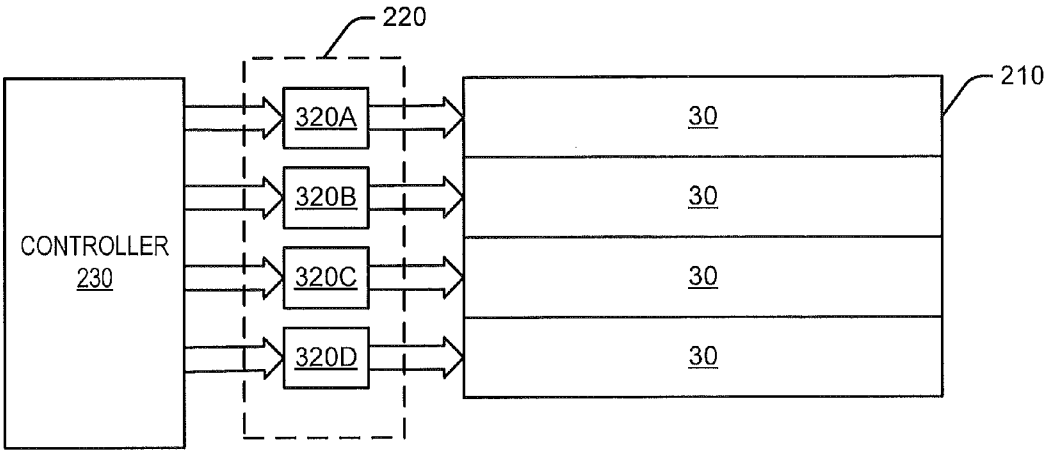

FIGURE 7

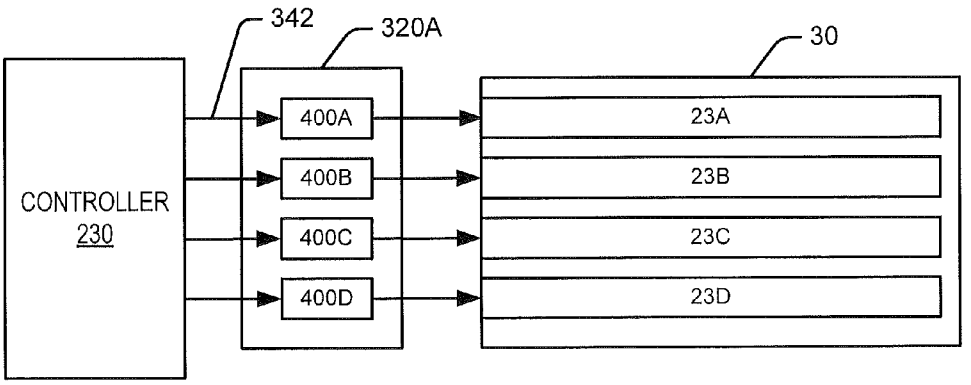

FIGURE 8

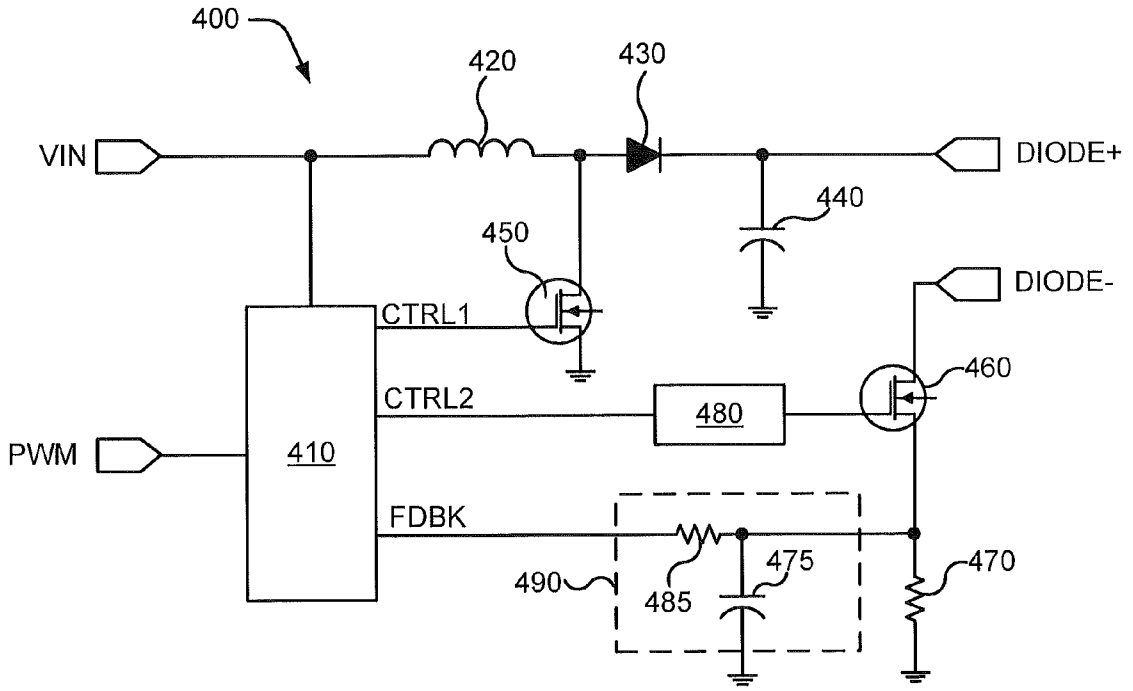

FIGURE 9

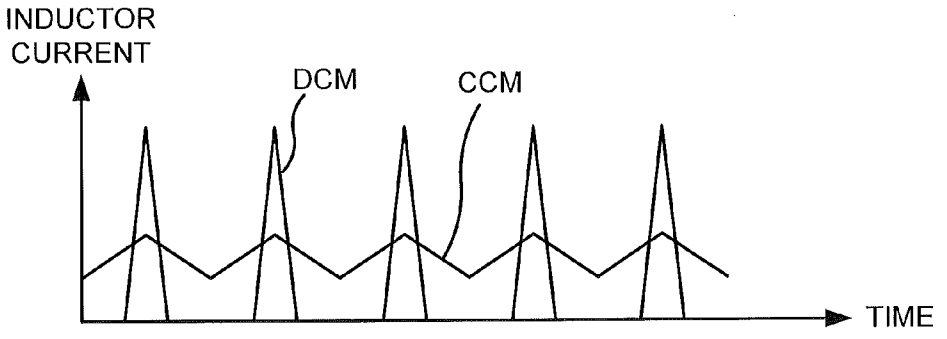

FIGURE 10

SOLID STATE LIGHTING PANELS WITH VARIABLE VOLTAGE BOOST CURRENT SOURCES

CROSS-REFERENCE TO RELATED APPLICATIONS

This application is a continuation of U.S. application Ser. No. 13/469,188, filed May 11, 2012, entitled "SOLID STATE LIGHTING PANELS WITH VARIABLE BOOST CURRENT SOURCES" which is a continuation of U.S. application Ser. No. 12/977,422, filed Dec. 23, 2010, entitled "SOLID STATE LIGHTING PANELS WITH VARIABLE VOLTAGE BOOST CURRENT SOURCES" which is a continuation of U.S. application Ser. No. 11/601,504, filed Nov. 17, 2006, entitled "SOLID STATE LIGHTING PANELS WITH VARIABLE VOLTAGE BOOST CURRENT SOURCES" which claims priority to U.S. Provisional Patent Application No. 60/738,305 entitled "SYSTEM AND METHOD FOR INTERCONNECTION AND INTEGRATION OF LED BACKLIGHTING MODULES" filed Nov. 18, 2005, the disclosures of which are hereby incorporated herein by reference as if set forth in its entirety.

FIELD OF THE INVENTION

The present invention relates to solid state lighting, and more particularly to adjustable solid state lighting panels and to systems and methods for generating high voltages for illuminating solid state lighting panels.

BACKGROUND

Solid state lighting arrays are used for a number of lighting applications. For example, solid state lighting panels including arrays of solid state lighting devices have been used as direct illumination sources, for example, in architectural and/or accent lighting. A solid state lighting device may include, for example, a packaged light emitting device including one or more light emitting diodes (LEDs). Inorganic LEDs typically include semiconductor layers forming p-n junctions. Organic LEDs (OLEDs), which include organic light emission layers, are another type of solid state light emitting device. Typically, a solid state light emitting device generates light through the recombination of electronic carriers, i.e. electrons and holes, in a light emitting layer or region.

Solid state lighting panels are commonly used as backlights for small liquid crystal display (LCD) display screens, such as LCD display screens used in portable electronic devices. In addition, there has been increased interest in the use of solid state lighting panels as backlights for larger displays, such as LCD television displays.

For smaller LCD screens, backlight assemblies typically employ white LED lighting devices that include a blue-emitting LED coated with a wavelength conversion phosphor that converts some of the blue light emitted by the LED into yellow light. The resulting light, which is a combination of blue light and yellow light, may appear white to an observer. However, while light generated by such an arrangement may appear white, objects illuminated by such light may not appear to have a natural coloring, because of the limited spectrum of the light. For example, because the light may have little energy in the red portion of the visible spectrum, red colors in an object may not be illuminated well by such light. As a result, the object may appear to have an unnatural coloring when viewed under such a light source.

The color rendering index of a light source is an objective measure of the ability of the light generated by the source to accurately illuminate a broad range of colors. The color rendering index ranges from essentially zero for monochromatic sources to nearly 100 for incandescent sources. Light generated from a phosphor-based solid state light source may have a relatively low color rendering index.

For large-scale illumination applications, it is often desirable to provide a lighting source that generates a white light having a high color rendering index, so that objects illuminated by the lighting panel may appear more natural. Similarly, for display backlight applications, it may be desirable to provide a backlight source that permits the display to have a large range of displayable colors (color gamut). Accordingly, such lighting sources may typically include an array of solid state lighting devices including red, green and blue light emitting devices. When red, green and blue light emitting devices are energized simultaneously, the resulting combined light may appear white, or nearly white, depending on the relative intensities of the red, green and blue sources, which may provide a high color rendering index. There are many different hues of light that may be considered "white." For example, some "white" light, such as light generated by sodium vapor lighting devices, may appear yellowish in color, while other "white" light, such as light generated by some fluorescent lighting devices, may appear more bluish in color. Similarly, a display may generate a large range of colors by altering the relative intensities of the red, green and blue light sources of a backlight unit.

For larger display and/or illumination applications, multiple solid state lighting tiles may be connected together, for example, in a two dimensional array, to form a larger lighting panel. Such lighting panels may generate a significant amount of heat, however, due to the large number of light emitting devices included therein and/or due to the operation of electronic driver circuitry included in the lighting panel. Heat generated by the lighting panel must be dissipated or else the lighting panel may overheat, potentially damaging the lighting panel and/or components thereof. In order to dissipate a large amount of heat, a lighting panel may be provided with heat sinks and/or other surfaces from which excess heat may be radiated. Such features may be undesirable for a lighting panel, however, since they may be bulky, heavy and/or expensive.

SUMMARY

A lighting system according to some embodiments of the invention includes a lighting panel having a string of solid state lighting devices and a current supply circuit having a voltage input terminal, a control input terminal, and first and second output terminals coupled to the string of solid state lighting devices. The current supply circuit may be configured to supply an on-state drive current to the string of solid state lighting devices in response to a control signal. The current supply circuit may include a charging inductor coupled to the voltage input terminal and an output capacitor coupled to the first output terminal. The current supply circuit may be configured to operate in continuous conduction mode in which a varying or constant current continuously flows through the charging inductor while the on-state drive current is supplied to the string of solid state light emitting devices.

The current supply circuit may include a rectifier having an anode coupled to the charging inductor and a cathode coupled to the storage capacitor, a controller having a control input and first and second control outputs, and a first control transistor coupled to the anode of the rectifier and having a control

terminal coupled to the first control output of the controller. The first control transistor may be configured to cause the charging inductor to be energized in response to a first control signal from the controller and to cause energy stored in the charging inductor to be discharged through the rectifier and into the output capacitor in response to the first control signal.

The lighting system may further include a second control transistor coupled to the second output terminal of the current supply circuit and having an input coupled to the second control output of the controller. The second control transistor may be configured to cause a voltage stored in the output capacitor to be applied to the first output terminal of the current supply circuit in response to a second control signal from the controller.

The current supply circuit may further include a low pass filter between the second control output and the second control transistor.

The current supply circuit may further include a sense resistor coupled to the second output terminal of the current supply circuit, and the controller may further include a feedback input coupled to the sense resistor. The controller may be configured to activate the second control signal in response to a feedback signal received on the feedback input.

The current supply circuit may further include a low pass filter coupled between the sense resistor and the feedback input of the controller.

The charging inductor may have an inductance of about 50 μH to about 1.3 mH. In particular embodiments, the charging inductor may have an inductance of about 680 μH. The current supply circuit may be a variable voltage boost current supply circuit.

The lighting system may further include a plurality of strings of solid state light emitting devices and a plurality of current supply circuits connected to respective ones of the strings of solid state light emitting devices and configured to operate in continuous conduction mode.

The current supply circuit may be configured to convert at least about 85% of input power into output power. In some embodiments, the current supply circuit may be configured to convert at least about 90% of input power into output power.

Some embodiments of the invention provide methods of generating an on-state drive current for driving a string of solid state light emitting devices in a lighting system. The methods include energizing a charging inductor with an input voltage, discharging energy stored in the charging inductor into an output capacitor, and applying a voltage on the output capacitor to the string of solid state lighting devices, wherein current continuously flows through the charging inductor while the on-state drive current is supplied to the string of solid state light emitting devices.

Discharging energy stored in the charging inductor into an output capacitor may include discharging energy stored in the charging inductor through a rectifier. Energizing the charging inductor with an input voltage may include activating a first control transistor coupled to the charging inductor with a first control signal.

The methods may further include detecting an output current and activating the first control transistor in response to the detected output current. Applying a voltage on the output capacitor to the string of solid state lighting devices may include activating a second control transistor coupled to the string with a second control signal.

The methods may further include filtering the second control signal and applying the filtered second control signal to the second control transistor. The methods may further include filtering the detected output current using a low pass filter.

A lighting system according to some embodiments of the invention includes a lighting panel including a first string of solid state lighting devices configured to emit red light, a second string of solid state lighting devices configured to emit green light, and a third string of solid state lighting devices configured to emit blue light, and at least three current supply circuits coupled to the first, second and third strings, respectively. Each of the current supply circuits may include a variable voltage boost, constant current power supply circuit configured to operate in continuous current mode.

The lighting system may further include a digital control system coupled to the current supply circuits and configured to generate a plurality of pulse width modulation (PWM) control signals. Each of the current supply circuits is configured to supply an on-state drive current to the respective string of solid state lighting devices in response to one of the plurality of PWM control signals generated by the digital control system.

The digital control system may include a closed loop digital control system that is configured to generate the PWM control signals in response to sensor output signals generated by at least one light sensor in response to light output by the lighting panel.

BRIEF DESCRIPTION OF THE DRAWINGS

The accompanying drawings, which are included to provide a further understanding of the invention and are incorporated in and constitute a part of this application, illustrate certain embodiment(s) of the invention. In the drawings:

FIG. **1** is a front view of a solid state lighting tile in accordance with some embodiments of the invention;

FIG. **2** is a top view of a packaged solid state lighting device including a plurality of LEDs in accordance with some embodiments of the invention;

FIG. **3** is a schematic circuit diagram illustrating the electrical interconnection of LEDs in a solid state lighting tile in accordance with some embodiments of the invention;

FIG. **4**A is a front view of a bar assembly including multiple solid state lighting tiles in accordance with some embodiments of the invention;

FIG. **4**B is a front view of a lighting panel in accordance with some embodiments of the invention including multiple bar assemblies;

FIG. **5** is a schematic block diagram illustrating a lighting system in accordance with some embodiments of the invention;

FIGS. **6**A-**6**D are a schematic diagrams illustrating possible configurations of photosensors on a lighting panel in accordance with some embodiments of the invention;

FIGS. **7**-**8** are schematic diagrams illustrating elements of a lighting system according to some embodiments of the invention;

FIG. **9** is a schematic circuit diagram of a current supply circuit according to some embodiments of the invention; and

FIG. **10** is a graph of inductor current versus time for a current supply circuit according to some embodiments of the invention.

DETAILED DESCRIPTION OF EMBODIMENTS OF THE INVENTION

Embodiments of the present invention now will be described more fully hereinafter with reference to the accompanying drawings, in which embodiments of the invention are shown. This invention may, however, be embodied in many different forms and should not be construed as limited to the

embodiments set forth herein. Rather, these embodiments are provided so that this disclosure will be thorough and complete, and will fully convey the scope of the invention to those skilled in the art. Like numbers refer to like elements throughout.

It will be understood that, although the terms first, second, etc. may be used herein to describe various elements, these elements should not be limited by these terms. These terms are only used to distinguish one element from another. For example, a first element could be termed a second element, and, similarly, a second element could be termed a first element, without departing from the scope of the present invention. As used herein, the term "and/or" includes any and all combinations of one or more of the associated listed items.

It will be understood that when an element such as a layer, region or substrate is referred to as being "on" or extending "onto" another element, it can be directly on or extend directly onto the other element or intervening elements may also be present. In contrast, when an element is referred to as being "directly on" or extending "directly onto" another element, there are no intervening elements present. It will also be understood that when an element is referred to as being "connected" or "coupled" to another element, it can be directly connected or coupled to the other element or intervening elements may be present. In contrast, when an element is referred to as being "directly connected" or "directly coupled" to another element, there are no intervening elements present.

Relative terms such as "below" or "above" or "upper" or "lower" or "horizontal" or "vertical" may be used herein to describe a relationship of one element, layer or region to another element, layer or region as illustrated in the figures. It will be understood that these terms are intended to encompass different orientations of the device in addition to the orientation depicted in the figures.

The terminology used herein is for the purpose of describing particular embodiments only and is not intended to be limiting of the invention. As used herein, the singular forms "a", "an" and "the" are intended to include the plural forms as well, unless the context clearly indicates otherwise. It will be further understood that the terms "comprises," "comprising," "includes" and/or "including" when used herein, specify the presence of stated features, integers, steps, operations, elements, and/or components, but do not preclude the presence or addition of one or more other features, integers, steps, operations, elements, components, and/or groups thereof.

Unless otherwise defined, all terms (including technical and scientific terms) used herein have the same meaning as commonly understood by one of ordinary skill in the art to which this invention belongs. It will be further understood that terms used herein should be interpreted as having a meaning that is consistent with their meaning in the context of this specification and the relevant art and will not be interpreted in an idealized or overly formal sense unless expressly so defined herein.

The present invention is described below with reference to flowchart illustrations and/or block diagrams of methods, systems and computer program products according to embodiments of the invention. It will be understood that some blocks of the flowchart illustrations and/or block diagrams, and combinations of some blocks in the flowchart illustrations and/or block diagrams, can be implemented by computer program instructions. These computer program instructions may be stored or implemented in a microcontroller, microprocessor, digital signal processor (DSP), field programmable gate array (FPGA), a state machine, programmable logic controller (PLC) or other processing circuit, general purpose computer, special purpose computer, or other programmable data processing apparatus such as to produce a machine, such that the instructions, which execute via the processor of the computer or other programmable data processing apparatus, create means for implementing the functions/acts specified in the flowchart and/or block diagram block or blocks.

These computer program instructions may also be stored in a computer readable memory that can direct a computer or other programmable data processing apparatus to function in a particular manner, such that the instructions stored in the computer readable memory produce an article of manufacture including instruction means which implement the function/act specified in the flowchart and/or block diagram block or blocks.

The computer program instructions may also be loaded onto a computer or other programmable data processing apparatus to cause a series of operational steps to be performed on the computer or other programmable apparatus to produce a computer implemented process such that the instructions which execute on the computer or other programmable apparatus provide steps for implementing the functions/acts specified in the flowchart and/or block diagram block or blocks. It is to be understood that the functions/acts noted in the blocks may occur out of the order noted in the operational illustrations. For example, two blocks shown in succession may in fact be executed substantially concurrently or the blocks may sometimes be executed in the reverse order, depending upon the functionality/acts involved. Although some of the diagrams include arrows on communication paths to show a primary direction of communication, it is to be understood that communication may occur in the opposite direction to the depicted arrows.

Referring now to FIG. **1**, a solid state lighting tile **10** may include thereon a number of solid state lighting elements **12** arranged in a regular and/or irregular two dimensional array. The tile **10** may include, for example, a printed circuit board (PCB) on which one or more circuit elements may be mounted. In particular, a tile **10** may include a metal core PCB (MCPCB) including a metal core having thereon a polymer coating on which patterned metal traces (not shown) may be formed. MCPCB material, and material similar thereto, is commercially available from, for example, The Bergquist Company. The PCB may further include heavy clad (4 oz. copper or more) and/or conventional FR-4 PCB material with thermal vias. MCPCB material may provide improved thermal performance compared to conventional PCB material. However, MCPCB material may also be heavier than conventional PCB material, which may not include a metal core.

In the embodiments illustrated in FIG. **1**, the lighting elements **12** are multi-chip clusters of four solid state emitting devices per cluster. In the tile **10**, four lighting elements **12** are serially arranged in a first path **20**, while four lighting elements **12** are serially arranged in a second path **21**. The lighting elements **12** of the first path **20** are connected, for example via printed circuits, to a set of four anode contacts **22** arranged at a first end of the tile **10**, and a set of four cathode contacts **24** arranged at a second end of the tile **10**. The lighting elements **12** of the second path **21** are connected to a set of four anode contacts **26** arranged at the second end of the tile **10**, and a set of four cathode contacts **28** arranged at the first end of the tile **10**.

The solid state lighting elements **12** may include, for example, organic and/or inorganic light emitting devices. An example of a solid state lighting element **12** for high power illumination applications is illustrated in FIG. **2**. A solid state lighting element **12** may comprise a packaged discrete elec-

tronic component including a carrier substrate **13** on which a plurality of LED chips **16**A-**16**D are mounted. In other embodiments, one or more solid state lighting elements **12** may comprise LED chips **16**A-**16**D mounted directly onto electrical traces on the surface of the tile **10**, forming a multi-chip module or chip on board assembly. Suitable tiles are disclosed in commonly assigned U.S. patent application Ser. No. 11/368,976 entitled "ADAPTIVE ADJUSTMENT OF LIGHT OUTPUT OF SOLID STATE LIGHTING PANELS" filed Mar. 6, 2006, the disclosure of which is incorporated herein by reference.

The LED chips **16**A-**16**D may include at least a red LED **16**A, a green LED **16**B and a blue LED **16**C. The blue and/or green LEDs may be InGaN-based blue and/or green LED chips available from Cree, Inc., the assignee of the present invention. The red LEDs may be, for example, AlInGaP LED chips available from Epistar, Osram Opto Semiconductors and others. The lighting element **12** may include an additional green LED **16**D in order to make more green light available.

In some embodiments, the LEDs **16** may have a square or rectangular periphery with an edge length of about 900 μm or greater (i.e. so-called "power chips." However, in other embodiments, the LED chips **16** may have an edge length of 500 μm or less (i.e. so-called "small chips"). In particular, small LED chips may operate with better electrical conversion efficiency than power chips. For example, green LED chips with a maximum edge dimension less than 500 microns and as small as 260 μm, may commonly have a higher electrical conversion efficiency than 900 μm chips, and are known to typically produce 55 lumens of luminous flux per Watt of dissipated electrical power and as much as 90 lumens or more of luminous flux per Watt of dissipated electrical power.

As further illustrated in FIG. **2**, the LEDs **16**A-**16**D may be covered by an encapsulant **14**, which may be clear and/or may include light scattering particles, phosphors, and/or other elements to achieve a desired emission pattern, color and/or intensity. While not illustrated in FIG. **2**, the lighting device **12** may further include a reflector cup surrounding the LEDs **16**A-**16**D, a lens mounted above the LEDs **16**A-**16**D, one or more heat sinks for removing heat from the lighting device, an electrostatic discharge protection chip, and/or other elements.

LED chips **16**A-**16**D of the lighting elements **12** in the tile **10** may be electrically interconnected as shown in the schematic circuit diagram in FIG. **3**. As shown therein, the LEDs may be interconnected such that the blue LEDs **16**A in the first path **20** are connected in series to form a string **20**A. Likewise, the first green LEDs **16**B in the first path **20** may be arranged in series to form a string **20**B, while the second green LEDs **16**D may be arranged in series to form a separate string **20**D. The red LEDs **16**C may be arranged in series to form a string **20**C. Each string **20**A-**20**D may be connected to an anode contact **22**A-**22**D arranged at a first end of the tile **10** and a cathode contact **24**A-**24**D arranged at the second end of the tile **10**, respectively.

A string **20**A-**20**D may include all, or less than all, of the corresponding LEDs in the first path **20** or the second path **21**. For example, the string **20**A may include all of the blue LEDs from all of the lighting elements **12** in the first path **20**. Alternatively, a string **20**A may include only a subset of the corresponding LEDs in the first path **20**. Accordingly the first path **20** may include four serial strings **20**A-**20**D arranged in parallel on the tile **10**.

The second path **21** on the tile **10** may include four serial strings **21**A, **21**B, **21**C, **21**D arranged in parallel. The strings **21**A to **21**D are connected to anode contacts **26**A to **26**D, which are arranged at the second end of the tile **10** and to cathode contacts **28**A to **28**D, which are arranged at the first end of the tile **10**, respectively.

It will be appreciated that, while the embodiments illustrated in FIGS. **1**-**3** include four LED chips **16** per lighting device **12** which are electrically connected to form at least four strings of LEDs **16** per path **20**, **21**, more and/or fewer than four LED chips **16** may be provided per lighting device **12**, and more and/or fewer than four LED strings may be provided per path **20**, **21** on the tile **10**. For example, a lighting device **12** may include only one green LED chip **16**B, in which case the LEDs may be connected to form three strings per path **20**, **21**. Likewise, in some embodiments, the two green LED chips in a lighting device **12** may be connected in serial to one another, in which case there may only be a single string of green LED chips per path **20**, **22**. Further, a tile **10** may include only a single path **20** instead of plural paths **20**, **21** and/or more than two paths **20**, **21** may be provided on a single tile **10**.

Multiple tiles **10** may be assembled to form a larger lighting bar assembly **30** as illustrated in FIG. **4**A. As shown therein, a bar assembly **30** may include two or more tiles **10**, **10'**, **10"** connected end-to-end. Accordingly, referring to FIGS. **3** and **4**, the cathode contacts **24** of the first path **20** of the leftmost tile **10** may be electrically connected to the anode contacts **22** of the first path **20** of the central tile **10'**, and the cathode contacts **24** of the first path **20** of the central tile **10'** may be electrically connected to the anode contacts **22** of the first path **20** of the rightmost tile **10"**, respectively. Similarly, the anode contacts **26** of the second path **21** of the leftmost tile **10** may be electrically connected to the cathode contacts **28** of the second path **21** of the central tile **10'**, and the anode contacts **26** of the second path **21** of the central tile **10'** may be electrically connected to the cathode contacts **28** of the second path **21** of the rightmost tile **10"**, respectively.

Furthermore, the cathode contacts **24** of the first path **20** of the rightmost tile **10"** may be electrically connected to the anode contacts **26** of the second path **21** of the rightmost tile **10"** by a loopback connector **35**. For example, the loopback connector **35** may electrically connect the cathode **24**A of the string **20**A of blue LED chips **16**A of the first path **20** of the rightmost tile **10"** with the anode **26**A of the string **21**A of blue LED chips of the second path **21** of the rightmost tile **10"**. In this manner, the string **20**A of the first path **20** may be connected in serial with the string **21**A of the second path **21** by a conductor **35**A of the loopback connector **35** to form a single string **23**A of blue LED chips **16**. The other strings of the paths **20**, **21** of the tiles **10**, **10'**, **10"** may be connected in a similar manner.

The loopback connector **35** may include an edge connector, a flexible wiring board, or any other suitable connector. In addition, the loop connector may include printed traces formed on/in the tile **10**.

While the bar assembly **30** shown in FIG. **4**A is a one dimensional array of tiles **10**, other configurations are possible. For example, the tiles **10** could be connected in a two-dimensional array in which the tiles **10** are all located in the same plane, or in a three dimensional configuration in which the tiles **10** are not all arranged in the same plane. Furthermore the tiles **10** need not be rectangular or square, but could, for example, be hexagonal, triangular, or the like.

Referring to FIG. **4**B, in some embodiments, a plurality of bar assemblies **30** may be combined to form a lighting panel **40**, which may be used, for example, as a backlighting unit (BLU) for an LCD display. As shown in FIG. **4**B, a lighting panel **40** may include four bar assemblies **30**, each of which includes six tiles **10**. The rightmost tile **10** of each bar assembly **30** includes a loopback connector **35**. Accordingly, each

bar assembly **30** may include four strings **23** of LEDs (i.e. one red, two green and one blue). Alternatively, each bar assembly **30** may include three strings **23** of LEDs (i.e. one red, one green and one blue).

In embodiments including four LED strings **23** (one red, two green and one blue) per bar assembly **30**, a lighting panel **40** including nine bar assemblies may have 36 separate strings of LEDs. In embodiments including three LED strings **23** (one red, one green and one blue) per bar assembly **30**, a lighting panel **40** including nine bar assemblies may have 27 separate strings of LEDs. Moreover, in a bar assembly **30** including six tiles **10** with eight solid state lighting elements **12** each, an LED string **23** may include 48 LEDs connected in serial.

For some types of LEDs, in particular blue and/or green LEDs, the forward voltage (Vf) may vary by as much as +/−0.75V from a nominal value from chip to chip at a standard drive current of 20 mA. A typical blue or green LED may have a Vf of 3.2 Volts. Thus, the forward voltage of such chips may vary by as much as 25%. For a string of LEDs containing 48 LEDs, the total Vf required to operate the string at 20 mA may vary by as much as +/−36V.

Accordingly, depending on the particular characteristics of the LEDs in a bar assembly, a string of one light bar assembly (e.g. the blue string) may require significantly different operating voltage compared to a corresponding string of another bar assembly. If the power supply is not designed accordingly, these variations may significantly affect the color and/or brightness uniformity of a lighting panel that includes multiple tiles **10** and/or bar assemblies **30**, as such Vf variations may lead to variations in brightness and/or hue from tile to tile and/or from bar to bar. For example, current differences from string to string, which may result from large LED string voltage variations, may lead to large differences in the flux, peak wavelength, and/or dominant wavelength output by a string. Variations in LED drive current on the order of 5% or more may result in unacceptable variations in light output from string to string and/or from tile to tile. Such variations may significantly affect the overall color gamut, or range of displayable colors, of a lighting panel and/or may affect the uniformity of color and/or luminance, of a lighting panel.

In addition, the light output characteristics of LED chips may change during their operational lifetime. For example, the light output by an LED may change over time and/or with ambient temperature.

In order to provide consistent, controllable light output characteristics for a lighting panel, some embodiments of the invention provide a lighting panel having two or more serial strings of LED chips. An independent current control circuit is provided for each of the strings of LED chips. Furthermore, current to each of the strings may be individually controlled, for example, by means of pulse width modulation (PWM) and/or pulse frequency modulation (PFM). The width of pulses applied to a particular string in a PWM scheme (or the frequency of pulses in a PFM scheme) may be based on a pre-stored pulse width (frequency) value that may be modified during operation based, for example, on a user input and/or a sensor input.

Accordingly, referring to FIG. **5**, a lighting system **200** is shown. The lighting system **200**, which may be a backlight for an LCD display panel, includes a lighting panel **40**. The lighting panel **40** may include, for example, a plurality of bar assemblies **30**, which, as described above, may include a plurality of tiles **10**. However, it will be appreciated that embodiments of the invention may be employed in conjunction with lighting panels formed in other configurations. For example, some embodiments of the invention may be employed with solid state backlight panels that include a single, large area tile.

In particular embodiments, however, a lighting panel **40** may include a plurality of bar assemblies **30**, each of which may have four cathode connectors and four anode connectors corresponding to the anodes and cathodes of four independent strings **23** of LEDs each having the same dominant wavelength. For example, each bar assembly **23** may have a red string **23**A, two green strings **23**B, **23**D, and a blue string **23**C, each with a corresponding pair of anode/cathode contacts on one side of the bar assembly **30**. In particular embodiments, a lighting panel **40** may include nine bar assemblies **30**. Thus, a lighting panel **40** may include 36 separate LED strings (or 27 strings if only one green string is included per bar assembly).

A current driver **220** provides independent current control for each of the LED strings **23** of the lighting panel **40**. For example, the current driver **220** may provide independent current control for 36 (or 27) separate LED strings in the lighting panel **40**. The current driver **220** may provide a constant current source for each of the 36 (or 27) separate LED strings of the lighting panel **40** under the control of a controller **230**. In some embodiments, the controller **230** may be implemented using an 8-bit microcontroller such as a PIC18F8722 from Microchip Technology Inc., which may be programmed to provide pulse width modulation (PWM) control of 36 separate current supply blocks within the driver **220** for the 36 (or 27) LED strings **23**.

Pulse width information for each of the 36 (or 27) LED strings may be obtained by the controller **230** from a color management unit **260**, which may in some embodiments include a color management controller such as the Avago HDJD-J822-SCR00 color management controller.

The color management unit **260** may be connected to the controller **230** through an I2C (Inter-Integrated Circuit) communication link **235**. The color management unit **260** may be configured as a slave device on an I2C communication link **235**, while the controller **230** may be configured as a master device on the link **235**. I2C communication links provide a low-speed signaling protocol for communication between integrated circuit devices. The controller **230**, the color management unit **260** and the communication link **235** may together form a feedback control system configured to control the light output from the lighting panel **40**. The registers R**1**-R**9**, etc., may correspond to internal registers in the controller **230** and/or may correspond to memory locations in a memory device (not shown) accessible by the controller **230**.

The controller **230** may include a register, e.g. registers R**1**-R**9**, G**1**A-G**9**A, B**1**-B**9**, G**1**B-G**9**B, for each LED string **23**, i.e. for a lighting unit with 36 LED strings **23**, the color management unit **260** may include at least 36 registers. Each of the registers is configured to store pulse width information for one of the LED strings **23**. The initial values in the registers may be determined by an initialization/calibration process. However, the register values may be adaptively changed over time based on user input **250** and/or input from one or more sensors **240** coupled to the lighting panel **40**.

The sensors **240** may include, for example, a temperature sensor **240**A, one or more photosensors **240**B, and/or one or more other sensors **240**C. In particular embodiments, a lighting panel **40** may include one photosensor **240**B for each bar assembly **30** in the lighting panel. However, in other embodiments, one photosensor **240**B could be provided for each LED string **30** in the lighting panel. In other embodiments, each tile **10** in the lighting panel **40** may include one or more photosensors **240**B.

In some embodiments, the photosensor **240**B may include photo-sensitive regions that are configured to be preferentially responsive to light having different dominant wavelengths. Thus, wavelengths of light generated by different LED strings **23**, for example a red LED string **23**A and a blue LED string **23**C, may generate separate outputs from the photosensor **240**B. In some embodiments, the photosensor **240**B may be configured to independently sense light having dominant wavelengths in the red, green and blue portions of the visible spectrum. The photosensor **240**B may include one or more photosensitive devices, such as photodiodes. The photosensor **240**B may include, for example, an Avago HDJD-S831-QT333 tricolor photo sensor.

Sensor outputs from the photosensors **240**B may be provided to the color management unit **260**, which may be configured to sample such outputs and to provide the sampled values to the controller **230** in order to adjust the register values for corresponding LED strings **23** in order to correct variations in light output on a string-by-string basis. In some embodiments, an application specific integrated circuit (ASIC) may be provided on each tile **10** along with one or more photosensors **240**B in order to pre-process sensor data before it is provided to the color management unit **260**. Furthermore, in some embodiments, the sensor output and/or ASIC output may be sampled directly by the controller **230**.

The photosensors **240**B may be arranged at various locations within the lighting panel **40** in order to obtain representative sample data. Alternatively and/or additionally, light guides such as optical fibers may be provided in the lighting panel **40** to collect light from desired locations. In that case, the photosensors **240**B need not be arranged within an optical display region of the lighting panel **40**, but could be provided, for example, on the back side of the lighting panel **40**. Further, an optical switch may be provided to switch light from different light guides which collect light from different areas of the lighting panel **40** to a photosensor **240**B. Thus, a single photosensor **240**B may be used to sequentially collect light from various locations on the lighting panel **40**.

The user input **250** may be configured to permit a user to selectively adjust attributes of the lighting panel **40**, such as color temperature, brightness, hue, etc., by means of user controls such as manual input controls on an LCD panel and/or software-based input controls if, for example, the LCD panel is a computer monitor.

The temperature sensor **240**A may provide temperature information to the color management unit **260** and/or the controller **230**, which may adjust the light output from the lighting panel on a string-to-string and/or color-to-color basis based on known/predicted brightness vs. temperature operating characteristics of the LED chips **16** in the strings **23**.

Various configurations of photosensors **240**B are shown in FIGS. **6**A-**6**D. For example, in the embodiments of FIG. **6**A, a single photosensor **240**B is provided in the lighting panel **40**. The photosensor **240**B may be provided at a location where it may receive an average amount of light from more than one tile/string in the lighting panel.

In order to provide more extensive data regarding light output characteristics of the lighting panel **40**, more than one photosensor **240**B may be used. For example, as shown in FIG. **6**B, there may be one photosensor **240**B per bar assembly **30**. In that case, the photosensors **240**B may be located at ends of the bar assemblies **30** and may be arranged to receive an average/combined amount of light emitted from the bar assembly **30** with which they are associated.

As shown in FIG. **6**C, photosensors **240**B may be arranged at one or more locations within a periphery of the light emitting region of the lighting panel **40**. However in some embodiments, the photosensors **240**B may be located away from the light emitting region of the lighting panel **40**, and light from various locations within the light emitting region of the lighting panel **40** may be transmitted to the sensors **240**B through one or more light guides. For example, as shown in FIG. **6**D, light from one or more locations **249** within the light emitting region of the lighting panel **40** is transmitted away from the light emitting region via light guides **247**, which may be optical fibers that may extend through and/or across the tiles **10**.

In the embodiments illustrated in FIG. **6**D, the light guides **247** terminate at an optical switch **245**, which selects a particular guide **247** to connect to the photosensor **240**B based on control signals from the controller **230** and/or from the color management unit **260**. It will be appreciated, however, that the optical switch **245** is optional, and that each of the light guides **245** may terminate at a respective photosensor **240**B. In further embodiments, instead of an optical switch **245**, the light guides **247** may terminate at a light combiner, which combines the light received over the light guides **247** and provides the combined light to a photosensor **240**B. The light guides **247** may extend across partially across, and/or through the tiles **10**. For example, in some embodiments, the light guides **247** may run behind the panel **40** to various light collection locations and then run through the panel at such locations. Furthermore, the photosensor **240**B may be mounted on a front side of the panel (i.e. on the side of the panel **40** on which the lighting devices **16** are mounted) or on a reverse side of the panel **40** and/or a tile **10** and/or bar assembly **30**.

Referring now to FIG. **7**, a current driver **220** may include a plurality of bar driver circuits **320**A-**320**D. One bar driver circuit **320**A-**320**D may be provided for each bar assembly **30** in a lighting panel **40**. In the embodiments shown in FIG. **7**, the lighting panel **40** includes four bar assemblies **30**. However, in some embodiments the lighting panel **40** may include nine bar assemblies **30**, in which case the current driver **220** may include nine bar driver circuits **320**. As shown in FIG. **8**, in some embodiments, each bar driver circuit **320** may include four current supply circuits **400**A-**400**D, i.e., one current supply circuit **400**A-**400**D for each LED string **23**A-**23**D of the corresponding bar assembly **30**. Operation of the current supply circuits **400**A-**400**B may be controlled by control signals **342** from the controller **230**.

A current supply circuit **400** according to some embodiments of the invention is illustrated in more detail in FIG. **9**. As shown therein, a current supply circuit **400** may have a variable voltage boost converter configuration including a PWM controller **410**, a charging inductor **420**, a diode **430**, an output capacitor **440**, first and second control transistors **450**, **460**, and a sense resistor **470**. The current supply circuit **400** receives an input voltage VIN, which may be 34V in some embodiments. The current supply circuit **400** also receives a pulse width modulation signal PWM from the controller **230**. The current supply circuit **400** is configured to provide a substantially constant current to a corresponding LED string **23** via output terminals DIODE+ and DIODE−, which are connected to the anode and cathode of the corresponding LED string, respectively. The current supply circuit may act as a voltage boost converter to provide the high voltage that may be required to drive an LED string **23**. For example, an LED string **23** may require a forward voltage of about 170 V or more. Furthermore, the constant current may be supplied with a variable voltage boost to account for differences in average forward voltage from string to string. The PWM controller **410** may include, for example, an HV9911NG current mode PWM controller from Supertex.

The current supply circuit **400** is configured to supply current to the corresponding LED string **23** while the PWM input is a logic HIGH. Accordingly, for each timing loop, the PWM input of each current supply circuit **400** in the driver **220** is set to logic HIGH at the first clock cycle of the timing loop. The PWM input of a particular current supply circuit **400** is set to logic LOW, thereby turning off current to the corresponding LED string **23**, when a counter in the controller **230** reaches the value stored in a register of the controller **230** corresponding to the LED string **23**. Thus, while each LED string **23** in the lighting panel **40** may be turned on simultaneously, the strings may be turned off at different times during a given timing loop, which would give the LED strings different pulse widths within the timing loop. The apparent brightness of an LED string **23** may be approximately proportional to the duty cycle of the LED string **23**, i.e., the fraction of the timing loop in which the LED string **23** is being supplied with current.

An LED string **23** may be supplied with a substantially constant current during the period in which it is turned on. By manipulating the pulse width of the current signal, the average current passing through the LED string **23** may be altered even while maintaining the on-state current at a substantially constant value. Thus, the dominant wavelength of the LEDs **16** in the LED string **23**, which may vary with applied current, may remain substantially stable even though the average current passing through the LEDs **16** is being altered. Similarly, the luminous flux per unit power dissipated by the LED string **23** may remain more constant at various average current levels than, for example, if the average current of the LED string **23** was being manipulated using a variable current source.

The value stored in a register of the controller **230** corresponding to a particular LED string may be based on a value received from the color management unit **260** over the communication link **235**. Alternatively and/or additionally, the register value may be based on a value and/or voltage level directly sampled by the controller **230** from a sensor **240**.

In some embodiments, the color management unit **260** may provide a value corresponding to a duty cycle (i.e. a value from 0 to 100), which may be translated by the controller **230** into a register value based on the number of cycles in a timing loop. For example, the color management unit **260** indicates to the controller **230** via the communication link **235** that a particular LED string **23** should have a duty cycle of 50%. If a timing loop includes 10,000 clock cycles, then assuming the controller increments the counter with each clock cycle, the controller **230** may store a value of 5000 in the register corresponding to the LED string in question. Thus, in a particular timing loop, the counter is reset to zero at the beginning of the loop and the LED string **23** is turned on by sending an appropriate PWM signal to the current supply circuit **400** serving the LED string **23**. When the counter has counted to a value of 5000, the PWM signal for the current supply circuit **400** is reset, turning the LED string off.

In some embodiments, the pulse repetition frequency (i.e. pulse repetition rate) of the PWM signal may be in excess of 60 Hz. In particular embodiments, the PWM period may be 5 ms or less, for an overall PWM pulse repetition frequency of 200 Hz or greater. A delay may be included in the loop, such that the counter may be incremented only 100 times in a single timing loop. Thus, the register value for a given LED string **23** may correspond directly to the duty cycle for the LED string **23**. However, any suitable counting process may be used provided that the brightness of the LED string **23** is appropriately controlled.

The register values of the controller **230** may be updated from time to time to take into account changing sensor values. In some embodiments, updated register values may be obtained from the color management unit **260** multiple times per second.

Furthermore, the data read from the color management unit **260** by the controller **230** may be filtered to limit the amount of change that occurs in a given cycle. For example, when a changed value is read from the color management unit **260**, an error value may be calculated and scaled to provide proportional control ("P"), as in a conventional PID (Proportional-Integral-Derivative) feedback controller. Further, the error signal may be scaled in an integral and/or derivative manner as in a PID feedback loop. Filtering and/or scaling of the changed values may be performed in the color management unit **260** and/or in the controller **230**.

The configuration and operation of a variable voltage boost current supply circuit **400** according to some embodiments of the invention will now be described in greater detail. As noted above, a current supply circuit **400** may include a PWM controller **410** that is configured to control the operation of a first transistor **450** and a second transistor **460** to provide a constant current to the output terminals DIODE+ and DIODE−. When the first transistor **450** is turned on by the control signal CTRL**1** from the PWM controller **410**, the charging inductor **420** is energized by the input voltage VIN. In some embodiments, the input voltage VIN may be about 34 VDC (compared to 24 VDC for a typical voltage converter operating in discontinuous conduction mode, as explained in more detail below).

When the first transistor **450** is turned off, magnetic energy stored in the charging inductor **420** is discharged as a current through the rectifier diode **430** and is stored in the output capacitor **440**. By repeatedly charging and discharging the magnetic field of the charging inductor **420**, a high voltage can be built up in the output capacitor **440**. When the second transistor **460** is activated by the control signal CTRL**2** from the PWM controller **410**, the voltage stored in the output capacitor **440** is applied to the output terminal DIODE+. The control signal CTRL**2** may be filtered by a low pass filter **480** to remove sharp edges from the control signal CTRL**2** that may cause ringing or oscillation of the transistor **460**.

The current through the output terminals is monitored by the PWM controller **410** as a feedback signal FDBK which corresponds to a voltage on the sense resistor **470**. The feedback signal FDBK may be filtered by a low pass filter **490**, which may be, for example an RC filter including a series resistor **485** and a shunt capacitor **475**, in order to suppress transient currents that may arise when the LED string **23** is turned on.

The voltage stored on the output capacitor **440** is adjusted by the PWM controller **410** in response to the feedback signal FDBK to provide a constant current through the output terminals.

A conventional current driver may operate in discontinuous conduction mode (DCM), in which current does not flow continuously through the charging inductor **420**. In some embodiments of the present invention, the current supply circuits **400** in the driver circuits **320** are configured to operate in continuous conduction mode (CCM), in which current flows continuously through the charging inductor **420**.

Representative inductor current waveforms for continuous conduction mode and discontinuous conduction mode are shown in FIG. **10**. The waveforms shown in FIG. **10** are illustrative only and do not represent actual or simulated waveforms. In particular, the inductor current of a current supply circuit operating in discontinuous conduction mode

(DCM) has a series of peaks followed by periods of zero current. In the continuous conduction mode (CCM), the inductor current has peaks. However, the peak currents may be lower than in DCM, and the inductor current may not return to zero between the peaks.

Since the power dissipated by the current supply circuit **400** is dependent on the square of the inductor current ($P=I^2R$), DCM operation may consume more electric power than CCM operation, even though there are periods of no current conduction between the peaks of the DCM output current, because the peaks of the DCM output current may result in significant average power dissipation.

A circuit configured for CCM operation may have a similar topology as a circuit configured for DCM operation. However, in a circuit configured for CCM operation according to some embodiments of the invention, the charging inductor **420** may have a larger inductance value than an inductor used for DCM operation. For example, in a current supply circuit **400** configured according to some embodiments of the invention, the charging inductor **420** may have an inductance of about 50 μH to about 1.3 mH. In particular embodiments, the charging inductor **420** may have an inductance of about 680 μH.

The value of the charging inductor **420** that results in CCM operation may depend on a number of factors, including the type of PWM controller IC used, the boost ratio (i.e. the ratio of output voltage to input voltage), and/or the number of LEDs in the string being driven. In some cases, if the boost ratio is too high, an inductance that would otherwise result in CCM operation may instead result in DCM operation.

In some embodiments according to the invention, a current supply circuit **400** operating in CCM may achieve greater than 85% conversion efficiency, and in some cases may achieve greater than 90% conversion efficiency, compared to a typical DCM converter, which may be capable of only about 80% conversion efficiency (defined as power out/power in ×100). The difference between 80% efficiency and 90% efficiency may represent a reduction in the amount of energy wasted (and hence heat produced) of 50% (i.e., 20% to 10%). A fifty percent reduction in heat dissipation may allow the lighting panel to run cooler and/or for the LEDs thereon to operate more efficiently, and/or may enable the production of lighting panel systems having smaller heat sinks and/or that require less cooling. Accordingly, a lighting system including a current supply circuit **400** according to embodiments of the invention may be made smaller, thinner, lighter, and/or less expensively.

In the drawings and specification, there have been disclosed typical embodiments of the invention and, although specific terms are employed, they are used in a generic and descriptive sense only and not for purposes of limitation, the scope of the invention being set forth in the following claims.

That which is claimed is:

1. A lighting system, comprising:

at least two strings of solid state lighting devices that are respectively configured to emit at least a first light and a second light, respectively;

at least two current supply circuits coupled to first and second strings of the at least two strings, respectively, each of the current supply circuits configured to supply an on-state drive current to a respective string of the at least two strings of solid state lighting devices in response to at least one control signal generated in response to a sensor output signal generated by at least one temperature sensor, each of the current supply circuits comprising:

a controller having a control input, a first control output configured to provide a first PWM control signal, and a second control output configured to provide a second PWM control signal; and

first and second output terminals coupled to the respective string of the at least two strings of solid state lighting devices.

2. The lighting system according to claim **1**, further comprising a sense resistor coupled to the second output terminal of ones of the current supply circuits.

3. The lighting system according to claim **2**,

wherein the controller further comprises a feedback input coupled to the sense resistor, and

wherein the controller is configured to activate the second control signal in response to a feedback signal received on the feedback input.

4. The lighting system according to claim **1**, wherein the controller comprises a closed loop control system that is configured to generate the first and second PWM control signals in response to the sensor output signals generated by the at least one temperature sensor.

5. The lighting system according to claim **1**, wherein ones of the at least two current supply circuits comprise a variable voltage boost, constant current power supply circuit configured to operate in continuous current mode.

6. The lighting system according to claim **1**, wherein ones of the at least two current supply circuits comprise a voltage input terminal, and a control input terminal.

7. The lighting system according to claim **1**, wherein ones of the at least two current supply circuits comprise a charging inductor coupled to the voltage input terminal and an output capacitor coupled to the first output terminal.

8. The lighting system according to claim **7**, wherein the ones of the at least two current supply circuits are each configured to operate in continuous conduction mode in which current continuously flows through the charging inductor while the on-state drive current is supplied to the first and second strings, respectively.

9. The lighting system according to claim **7**, wherein each of the current supply circuits comprises:

a rectifier having an anode coupled to the charging inductor and a cathode coupled to the output capacitor; and

a first control transistor coupled to the anode of the rectifier and having a control terminal coupled to the first control output of the controller,

wherein the first control transistor is configured to cause the charging inductor to be energized in response to the first PWM control signal from the controller and to cause energy stored in the charging inductor to be discharged through the rectifier and into the output capacitor in response to the first PWM control signal.

10. The lighting system according to claim **9**, further comprising a second control transistor coupled to the second output terminal of the current supply circuit and having an input coupled to the second control output of the controller;

wherein the second control transistor is configured to cause a voltage stored in the output capacitor to be applied to the first output terminal of the current supply circuit in response to the second PWM control signal from the controller.

11. The lighting system according to claim **10**, wherein ones of the current supply circuits further comprise:

a low pass filter between the second control output and the second control transistor.

12. The lighting system according to claim **7**, wherein the charging inductor has an inductance of about 50 μH to about 1.3 mH.

13. The lighting system according to claim **7**, wherein the charging inductor has an inductance of about 680 pH.

14. The lighting system according to claim **1**, wherein the sensor output signal comprises a first sensor output signal, further comprising a light sensor that generates a second sensor output signal responsive to light output by the lighting system,

wherein the at least one control signal comprises the first sensor output signal and the second output sensor signal.

15. The lighting system according to claim **1**, wherein ones of the current supply circuits are configured to convert at least about 85% of input power into output power.

16. The lighting system according to claim **1**, wherein ones of the current supply circuits are configured to convert at least about 90% of input power into output power.

17. A lighting system, comprising:

a lighting panel including at least first and second strings of solid state lighting devices that are respectively configured to emit at least a first light and a second light, respectively;

at least first and second current supply circuits coupled to the at least first and second strings of solid state lighting devices, respectively, and configured to supply an on-state drive current to a respective one of the first and second strings of solid state lighting devices; and

a pulse width modulation (PWM) controller that is coupled to the first current supply circuit and the second current supply circuit and that is configured to generate, for each of the first current supply circuit and the second current supply circuit, a first PWM control signal and a second PWM control signal that are supplied to the each of the at least first and second strings.

18. The lighting system according to claim **17**,

wherein each of the first and second current supply circuits comprises a variable voltage boost, constant current power supply circuit configured to operate in continuous current mode.

19. The lighting system according to claim **18**, wherein each of the first and second current supply circuits comprises:

a temperature sensor that is configured to generate a sensor output signal that the PWM controller uses to generate the first PWM signal or the second PWM signal, and

a sense resistor that is coupled to an output terminal of the current supply circuit and that is configured to provide a feedback signal to the PWM controller.

20. The lighting system according to claim **17**, wherein each of the first and second current supply circuits comprises a sense resistor that is coupled to an output terminal of the respective one of the first and second current supply circuits and that is coupled to a feedback input to provide the feedback signal to provide closed loop control.

21. The lighting system according to claim **20**, further comprising a filter coupled to the sense resistor, the filter configured to filter the feedback input.

22. The lighting system according to claim **17**,

wherein the first string of solid state lighting devices are coated with a wavelength conversion phosphor and are configured to emit the first light that includes a combined light including a dominant wavelength corresponding to a blue color and a dominant wavelength corresponding to a yellow color, and

wherein the second string of solid state lighting devices are configured to emit the second light that includes a dominant wavelength corresponding to a red color.

23. The lighting system according to claim **22**, wherein the first current supply circuit provides current control of the first string of solid state lighting devices that is independent of current control of the second string of solid state lighting devices provided by the second current supply circuit.

24. The lighting system according to claim **22**, further comprising a third string of solid state lighting devices that are configured to emit a third light that includes a dominant wavelength corresponding to a red color.

25. The lighting system according to claim **24**, further comprising a third current supply circuit that is configured to supply an on-state drive current to the third string of solid state lighting devices, and

wherein the first current supply circuit provides current control of the first string of solid state lighting devices that is independent of current control of the second string of solid state lighting devices provided by the second current supply circuit and that is independent of current control of the third string of solid state lighting devices provided by the third current supply circuit.

* * * * *

UNITED STATES PATENT AND TRADEMARK OFFICE

CERTIFICATE OF CORRECTION

PATENT NO. : 8,941,331 B2
APPLICATION NO. : 13/896977
DATED : January 27, 2015
INVENTOR(S) : Roberts et al.

It is certified that error appears in the above-identified patent and that said Letters Patent is hereby corrected as shown below:

In the Claims:

Column 17, Claim 13, Line 2: Please correct "of about 680 pH."
to read -- of about 680 μH. --

Signed and Sealed this
Nineteenth Day of May, 2015

Michelle K. Lee

Michelle K. Lee
Director of the United States Patent and Trademark Office