US 20050047134A1

(19) United States

(12) Patent Application Publication

(10) Pub. No.: US 2005/0047134 A1

(43) Pub. Date: Mar. 3, 2005

Mueller et al.

(54) **CONTROLLED LIGHTING METHODS AND APPARATUS**

(75) Inventors: **George G. Mueller**, Boston, MA (US); **Ihor A. Lys**, Milton, MA (US); **Kevin J. Dowling**, Westford, MA (US); **Charles H. Cella**, Pembroke, MA (US); **Frederick M. Morgan**, Qincy, MA (US)

Correspondence Address:
LOWRIE, LANDO & ANASTASI
RIVERFRONT OFFICE
ONE MAIN STREET, ELEVENTH FLOOR
CAMBRIDGE, MA 02142 (US)

(73) Assignee: **Color Kinetics**, Boston, MA

(21) Appl. No.: **10/954,334**

(22) Filed: **Sep. 30, 2004**

Related U.S. Application Data

(63) Continuation of application No. 10/325,635, filed on Dec. 19, 2002, and which is a continuation-in-part of application No. 09/971,367, filed on Oct. 4, 2001, now Pat. No. 6,788,011, which is a continuation of application No. 09/669,121, filed on Sep. 25, 2000, now Pat. No. 6,806,659, which is a continuation of application No. 09/425,770, filed on Oct. 22, 1999, now Pat. No. 6,150,774, which is a continuation of application No. 08/920,156, filed on Aug. 26, 1997, now Pat. No. 6,016,038.

Said application No. 10/325,635 is a continuation-in-part of application No. 09/215,624, filed on Dec. 17, 1998, now Pat. No. 6,528,954.

Said application No. 10/325,635 is a continuation-in-part of application No. 09/213,607, filed on Dec. 17, 1998, now abandoned, and which is a continuation-in-part of application No. 09/213,581, filed on Dec. 17, 1998, and which is a continuation-in-part of application No. 09/213,540, filed on Dec. 17, 1998, now Pat. No. 6,720,745, and which is a continuation-in-part of application No. 09/333,739, filed on Jun. 15, 1999, and which is a continuation-in-part of application No. 09/815,418, filed on Mar. 22, 2001, now Pat. No. 6,577,080, which is a continuation of application No. 09/213,548, filed on Dec. 17, 1998, now Pat. No. 6,166,496.

Said application No. 10/325,635 is a continuation-in-part of application No. 09/870,193, filed on May 30, 2001, now Pat. No. 6,608,453, and which is a continuation-in-part of application No. 09/344,699, filed on Jun. 25, 1999, and which is a continuation-in-part of application No. 09/805,368, filed on Mar. 13, 2001.

Said application No. 10/325,635 is a continuation-in-part of application No. 09/663,969, filed on Sep. 19, 2000, now Pat. No. 6,548,967, and which is a continuation-in-part of application No. 09/716,819, filed on Nov. 20, 2000.

(List continued on next page.)

Publication Classification

(51) **Int. Cl.**[7] **F21V 9/00**

(52) **U.S. Cl.** **362/231**

(57) **ABSTRACT**

Provided herein are methods and systems for providing controlled lighting, including methods and systems for providing both white and non-white colored lighting, including color temperature controlled lighting. Such methods and systems include optical facilities for modifying light from a lighting unit, such as an LED-based lighting unit, including variable optical facilities and fixed optical facilities. Also provided are methods and systems for using multi-color lighting units in a variety of commercial applications. Also provided are methods and systems for lighting control, including methods to assist lighting designers and installers to improve the quality of lighting in environments. Also provided are intelligent dimmers, switches, sockets and fixtures, as well as facilities for programming and using them. Also provided are various sensor-feedback applications of lighting technology, including sensor-feedback involving light sensors and forward voltage sensors. Also provided are lighting methods and systems that operate on time-based parameters.

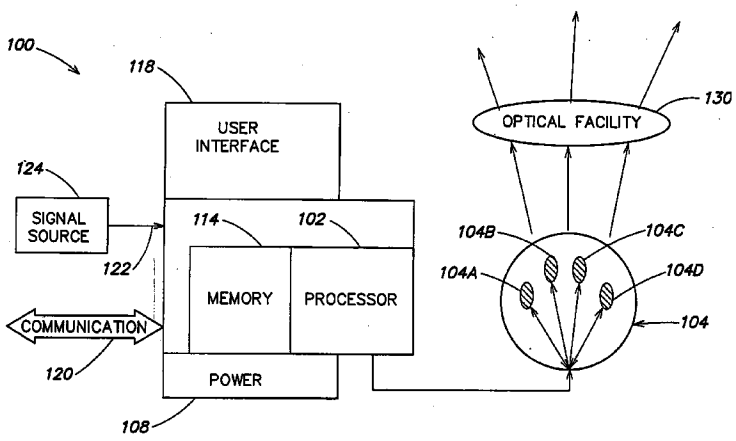

Related U.S. Application Data

Said application No. 10/325,635 is a continuation-in-part of application No. 09/675,419, filed on Sep. 29, 2000, now abandoned.
Said application No. 10/325,635 is a continuation-in-part of application No. 09/870,418, filed on May 30, 2001, and which is a continuation-in-part of application No. 10/245,788, filed on Sep. 17, 2002, and which is a continuation-in-part of application No. 10/045,629, filed on Oct. 25, 2001.
Said application No. 10/325,635 is a continuation-in-part of application No. 10/245,786, filed on Sep. 17, 2002.

(60) Provisional application No. 60/341,898, filed on Dec. 19, 2001. Provisional application No. 60/407,185, filed on Aug. 28, 2002. Provisional application No. 60/071,281, filed on Dec. 17, 1997. Provisional application No. 60/068,792, filed on Dec. 24, 1997. Provisional application No. 60/078,861, filed on Mar. 20, 1998. Provisional application No. 60/079,285, filed on Mar. 25, 1998. Provisional application No. 60/090,920, filed on Jun. 26, 1998. Provisional application No. 60/199,333, filed on Apr. 24, 2000. Provisional application No. 60/211,417, filed on Jun. 14, 2000. Provisional application No. 60/166,533, filed on Nov. 18, 1999. Provisional application No. 60/201,140, filed on May 2, 2000. Provisional application No. 60/156,672, filed on Sep. 29, 1999. Provisional application No. 60/243,250, filed on Oct. 25, 2000. Provisional application No. 60/296,377, filed on Jun. 6, 2001. Provisional application No. 60/297,828, filed on Jun. 13, 2001. Provisional application No. 60/290,101, filed on May 10, 2001. Provisional application No. 60/322,765, filed on Sep. 17, 2001. Provisional application No. 60/329,202, filed on Oct. 12, 2001. Provisional application No. 60/341,476, filed on Oct. 30, 2001. Provisional application No. 60/335,679, filed on Oct. 23, 2001. Provisional application No. 60/353,569, filed on Feb. 1, 2002.

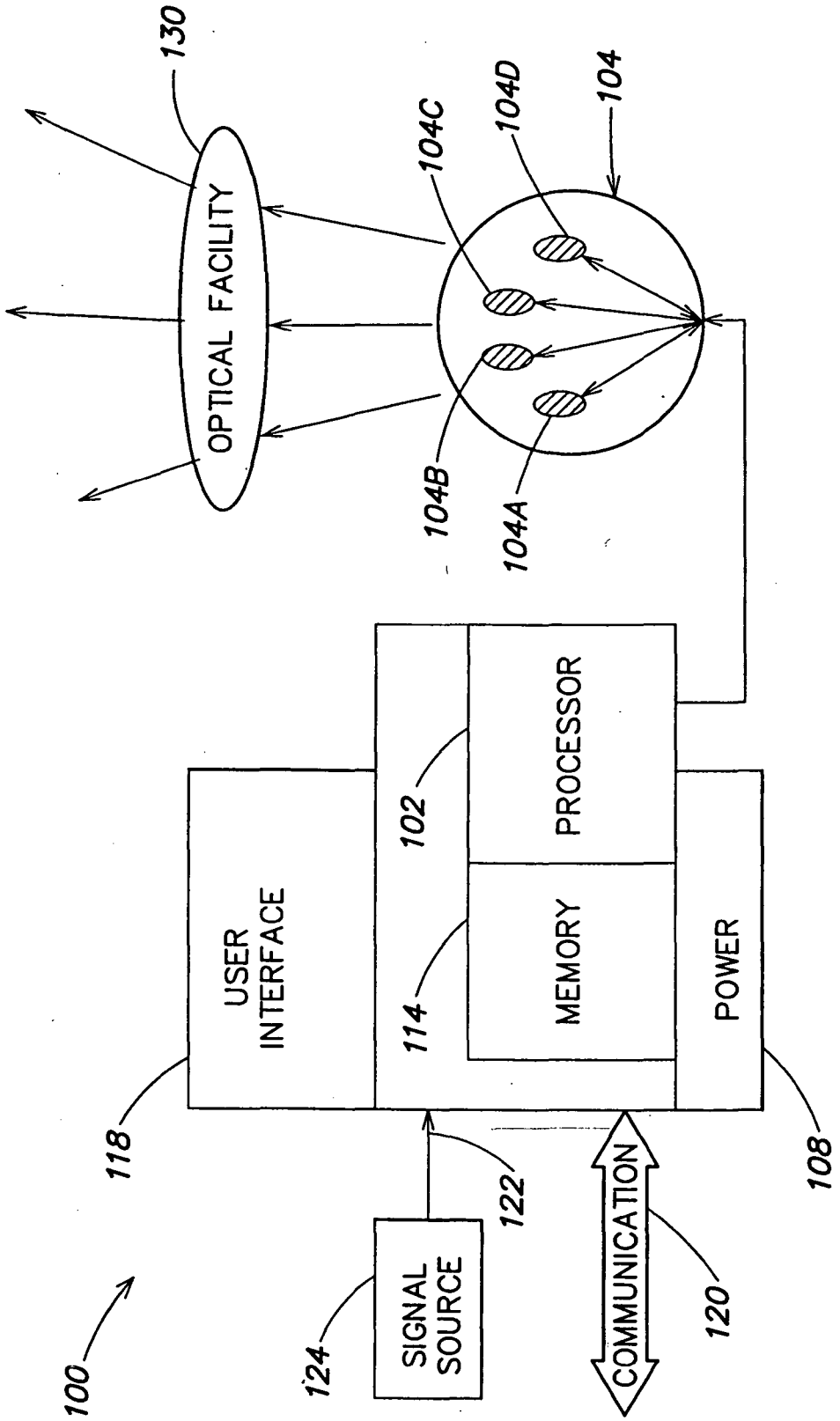
OPTICAL FACILITY
130
104
104D
104C
104B
104A
PROCESSOR
102
MEMORY
114
USER INTERFACE
118
POWER
108
COMMUNICATION
120
122
SIGNAL SOURCE
124
100

FIG. 1

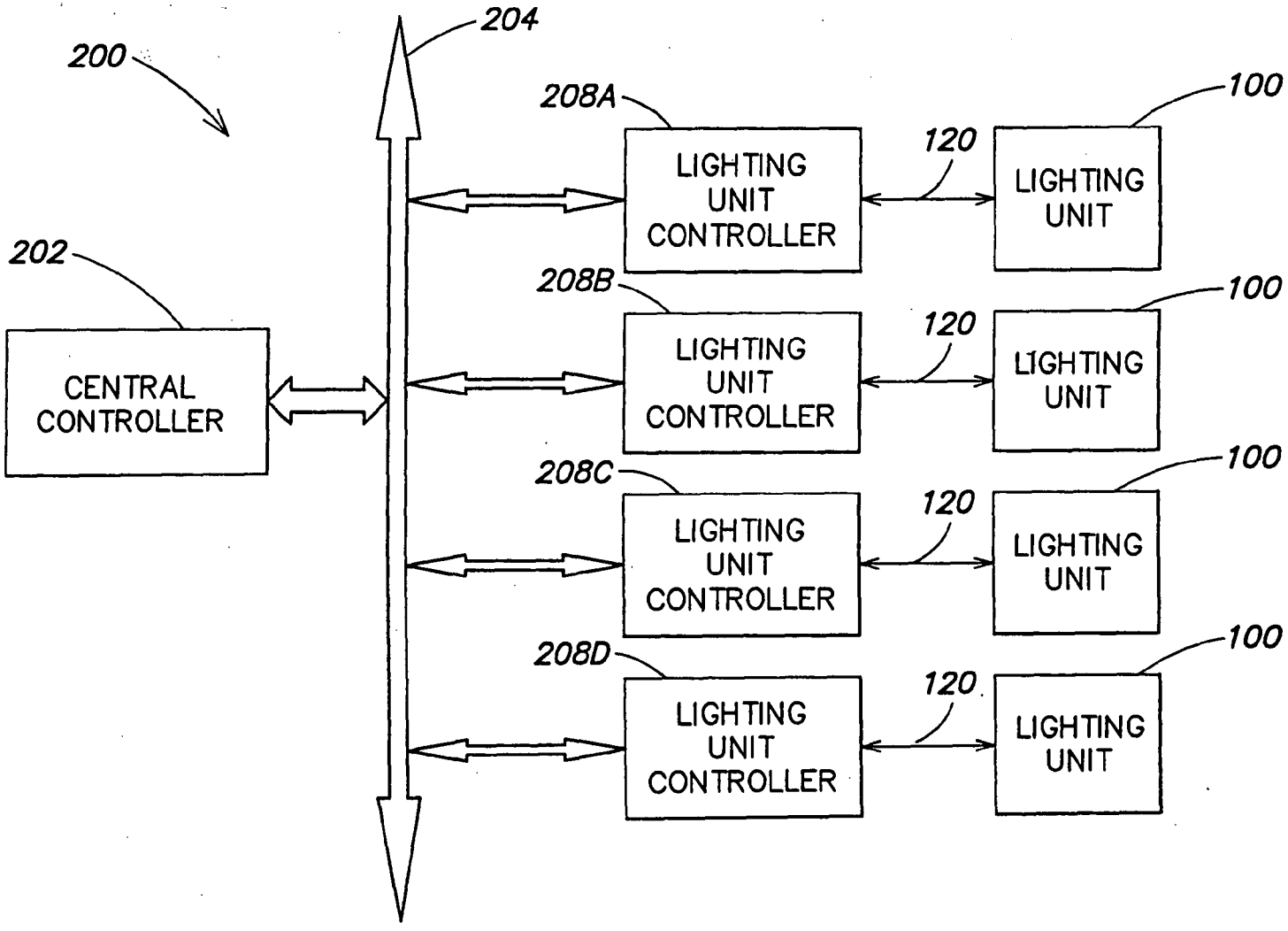
200
202
CENTRAL CONTROLLER
204
208A
208B
208C
208D
LIGHTING UNIT CONTROLLER
LIGHTING UNIT CONTROLLER
LIGHTING UNIT CONTROLLER
LIGHTING UNIT CONTROLLER
120
120
120
120
LIGHTING UNIT
LIGHTING UNIT
LIGHTING UNIT
LIGHTING UNIT
100
100
100
100

FIG. 2

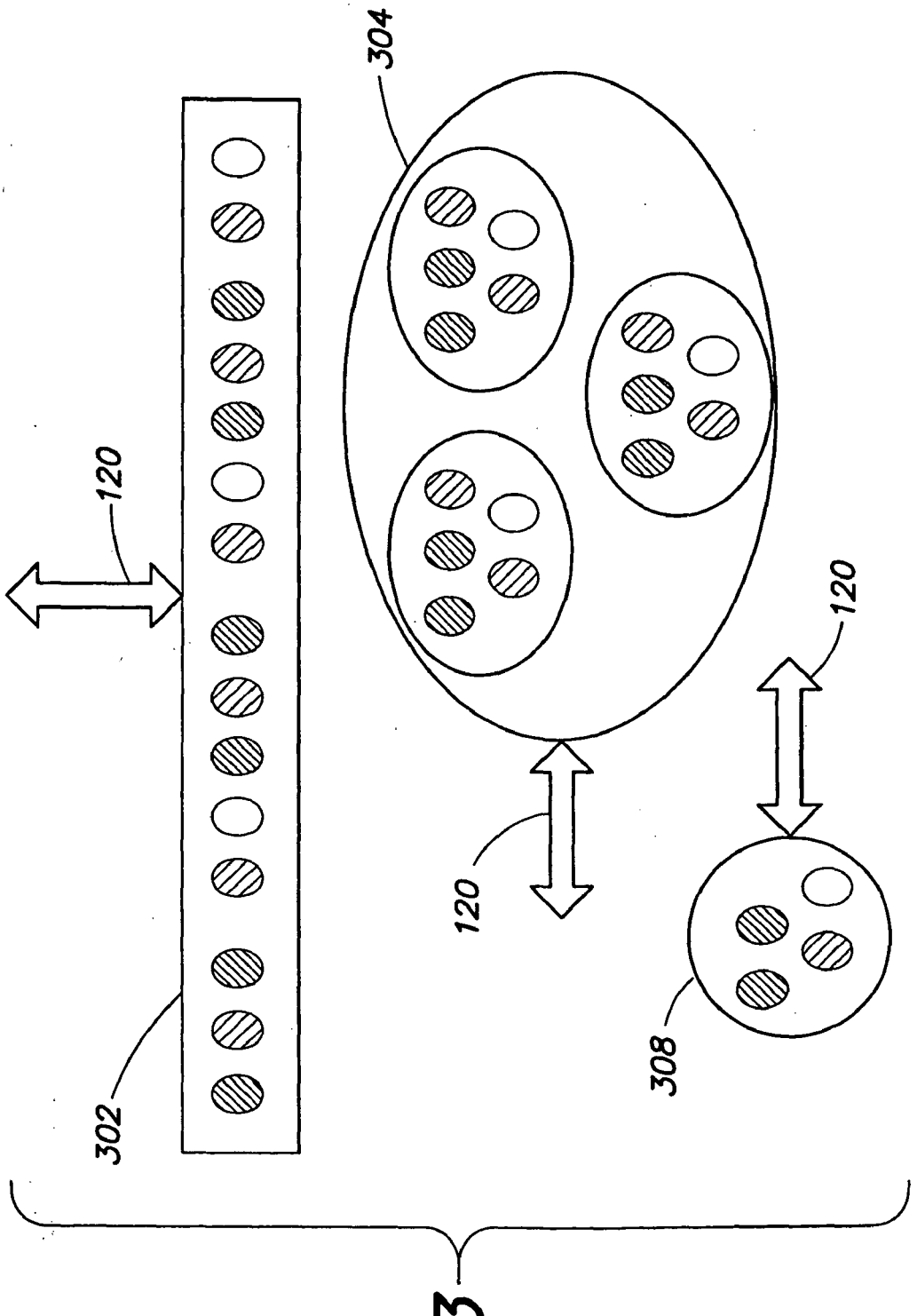

FIG. 3

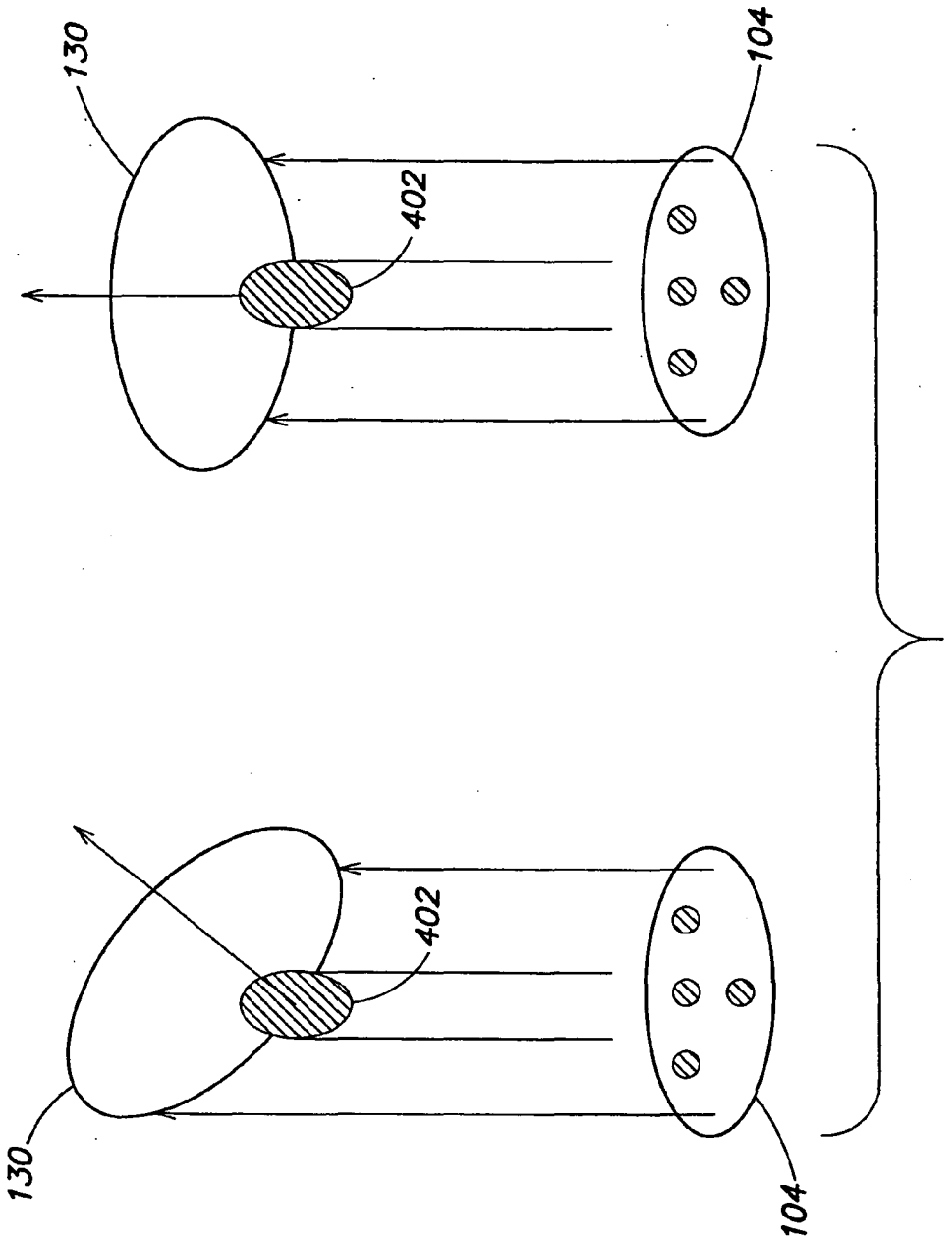

FIG. 4

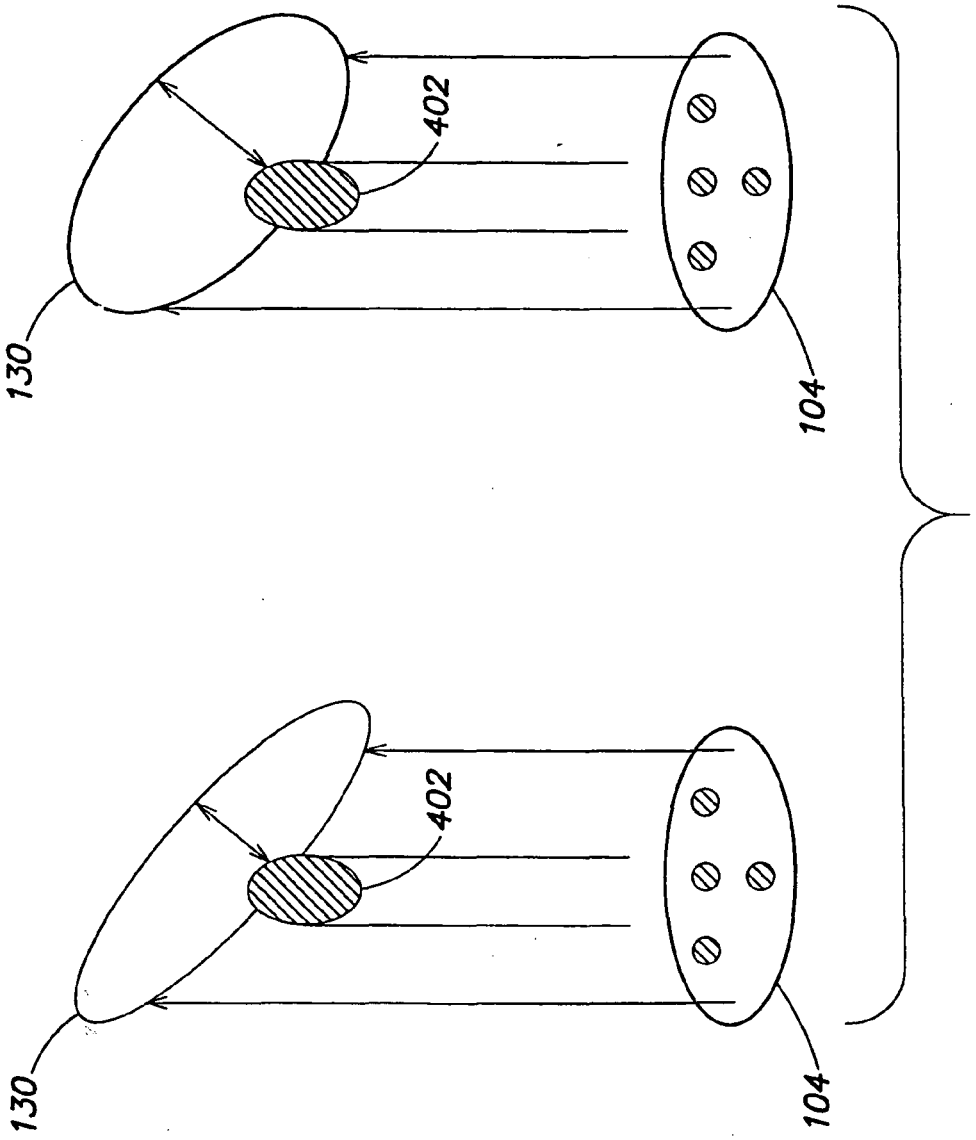

FIG. 5

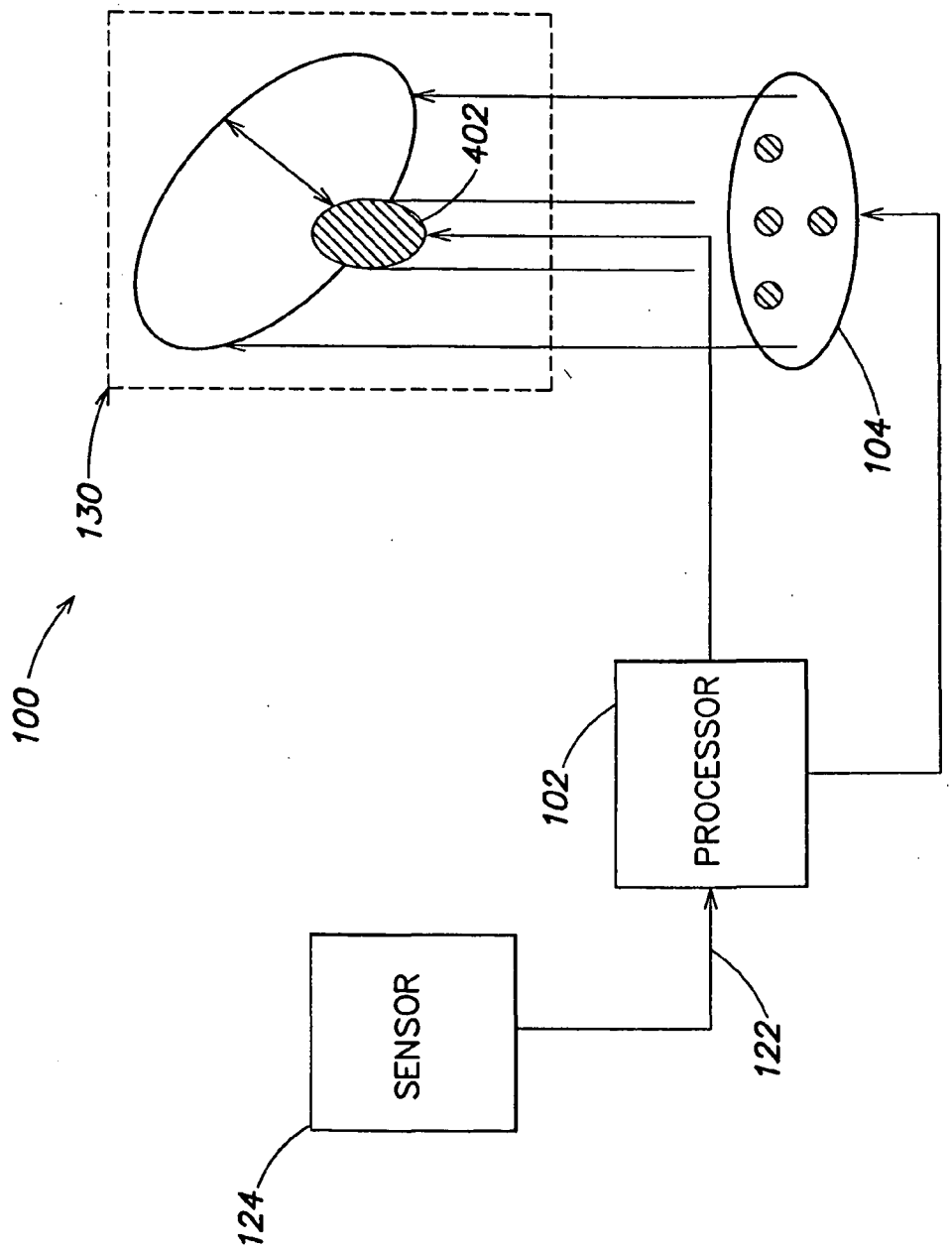

FIG. 6

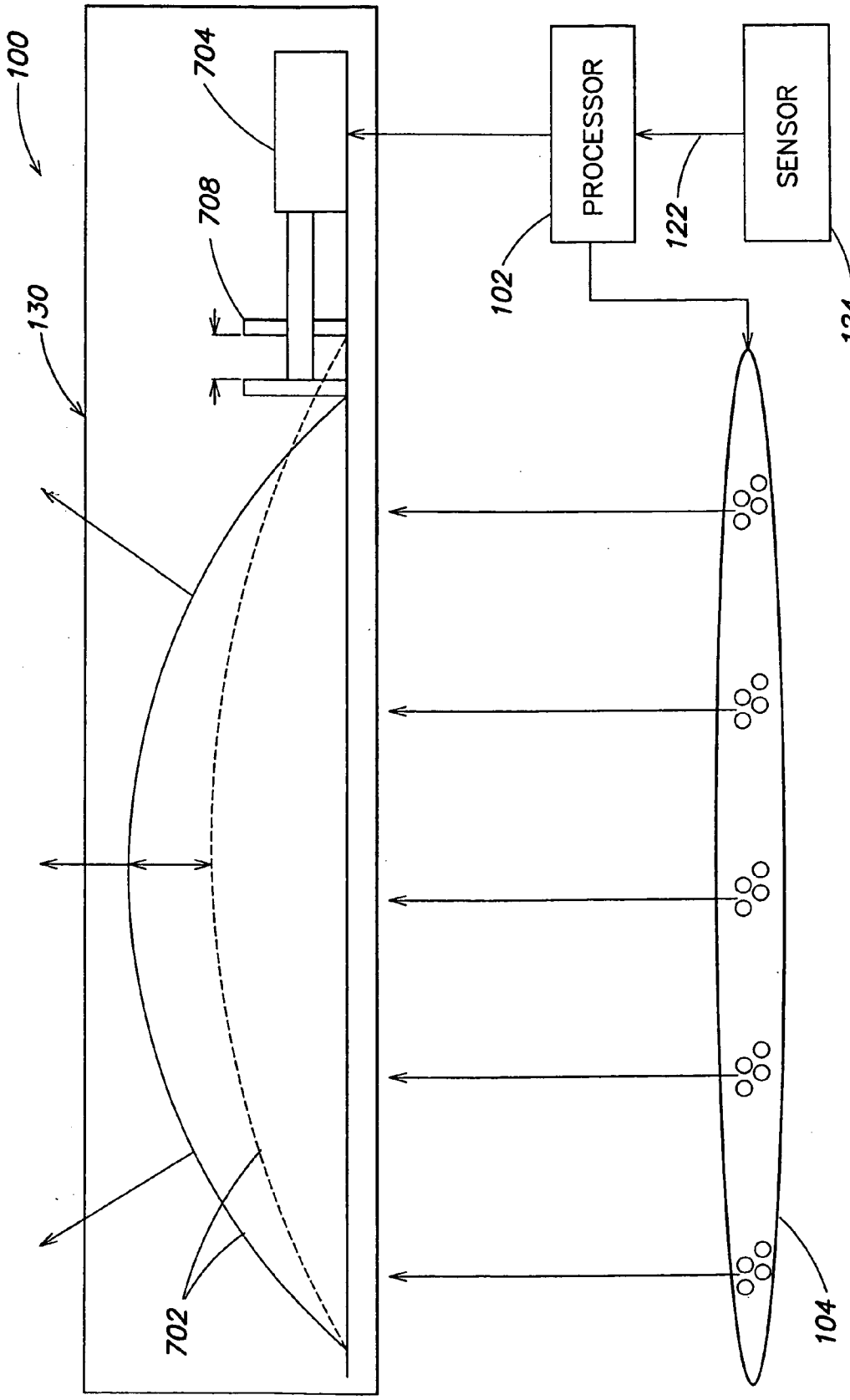

FIG. 7

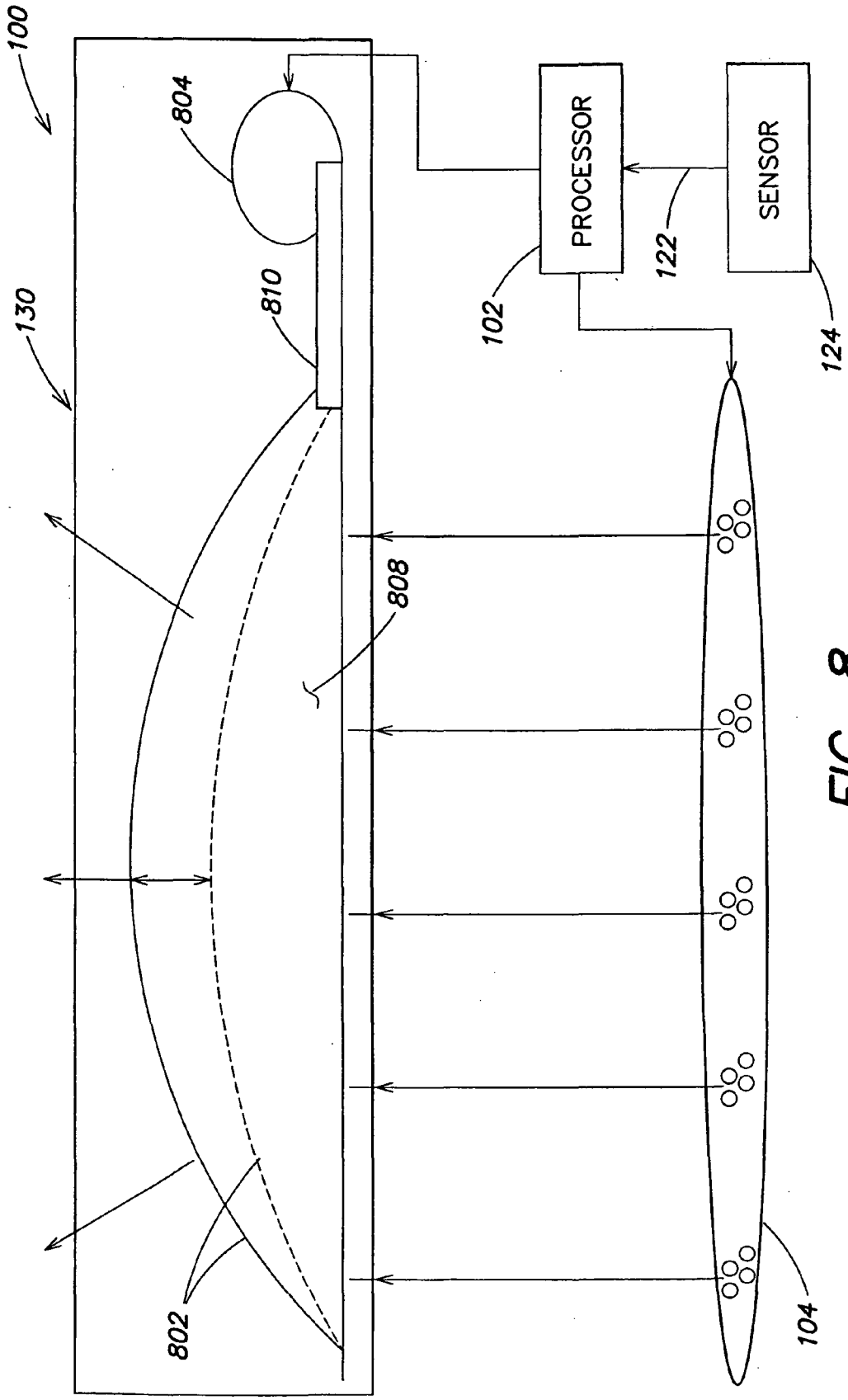

FIG. 8

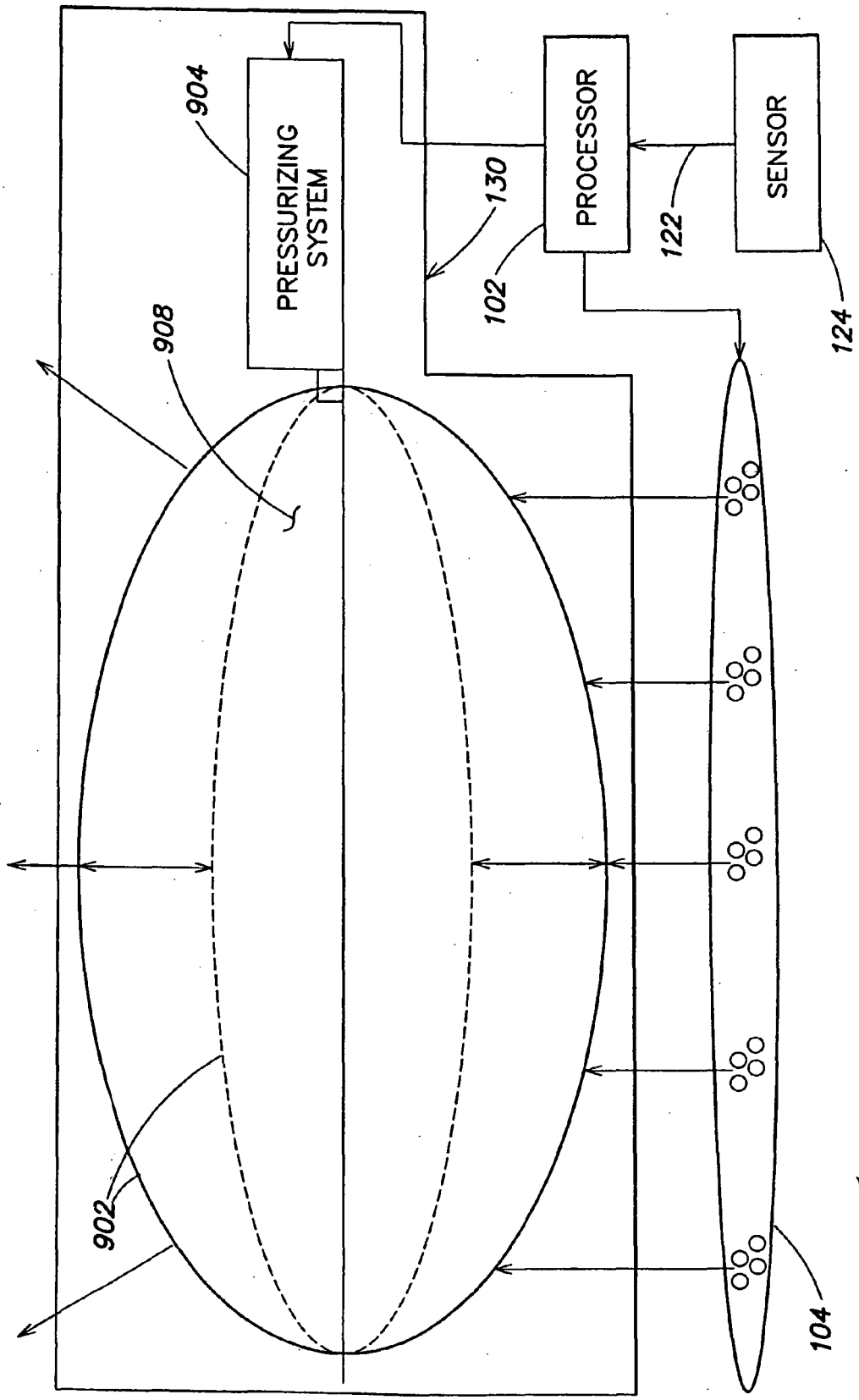
PRESSURIZING SYSTEM
PROCESSOR
SENSOR
904
908
902
130
102
122
124
104
100

FIG. 9

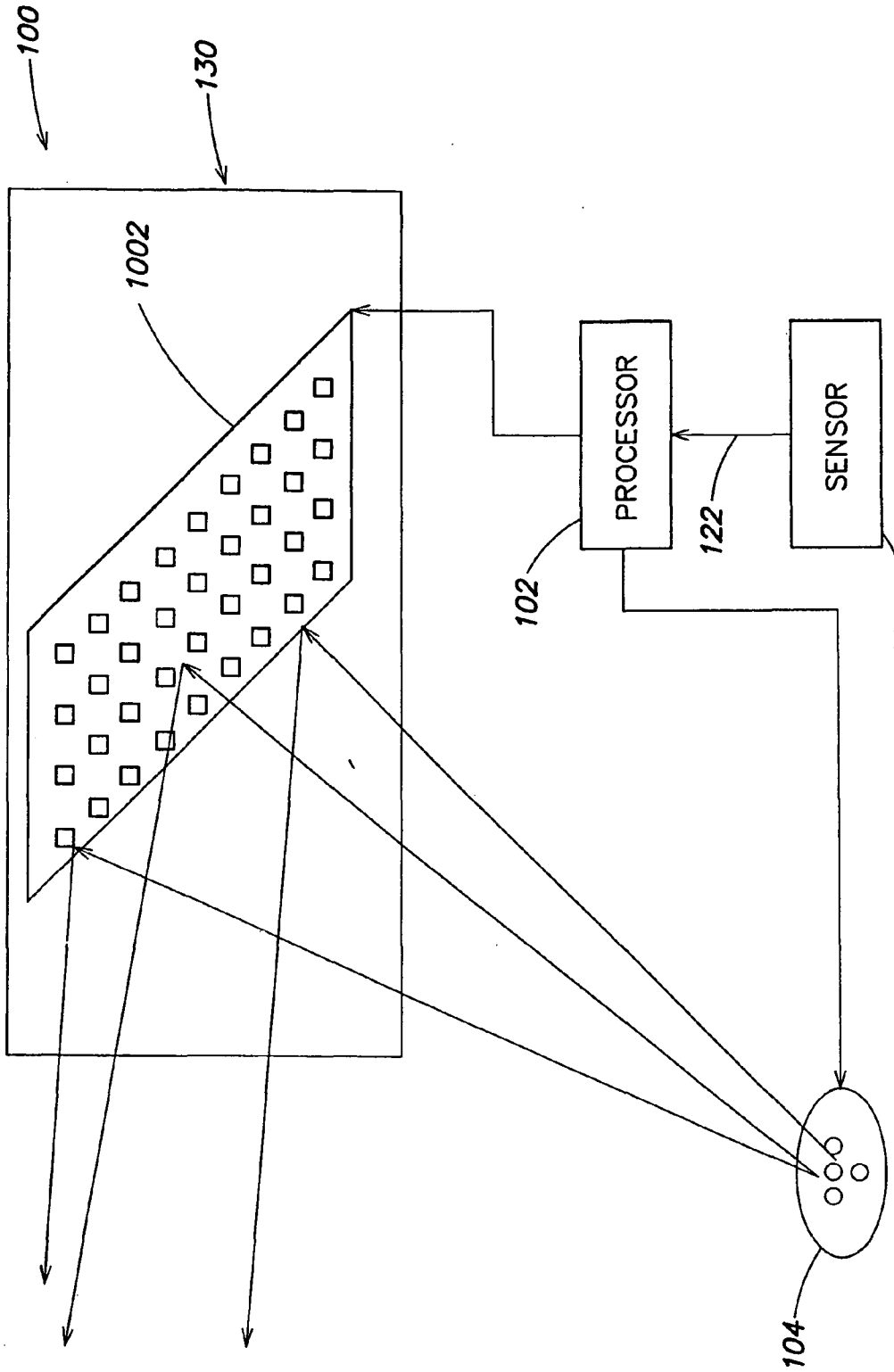

FIG. 10

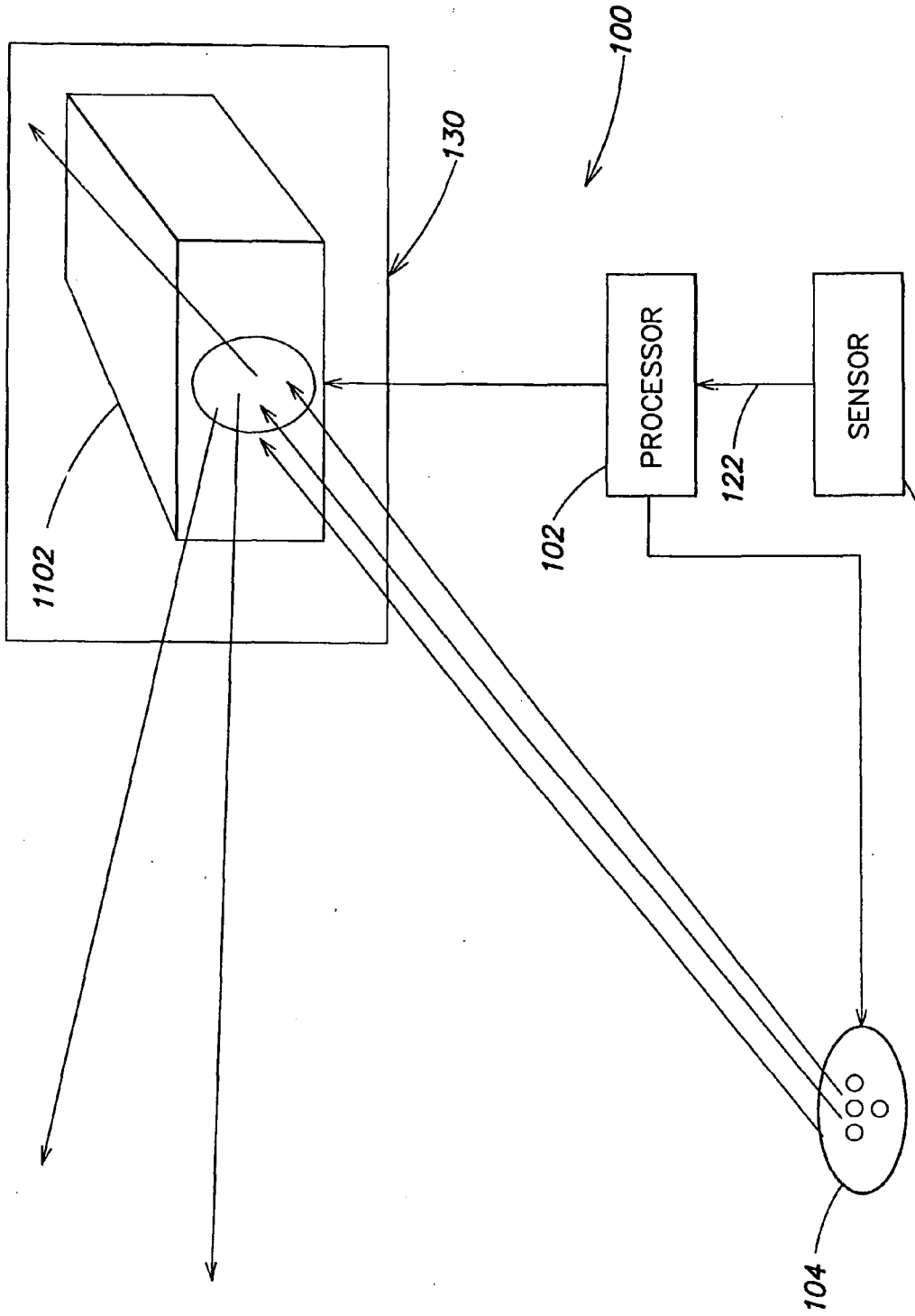

FIG. 11

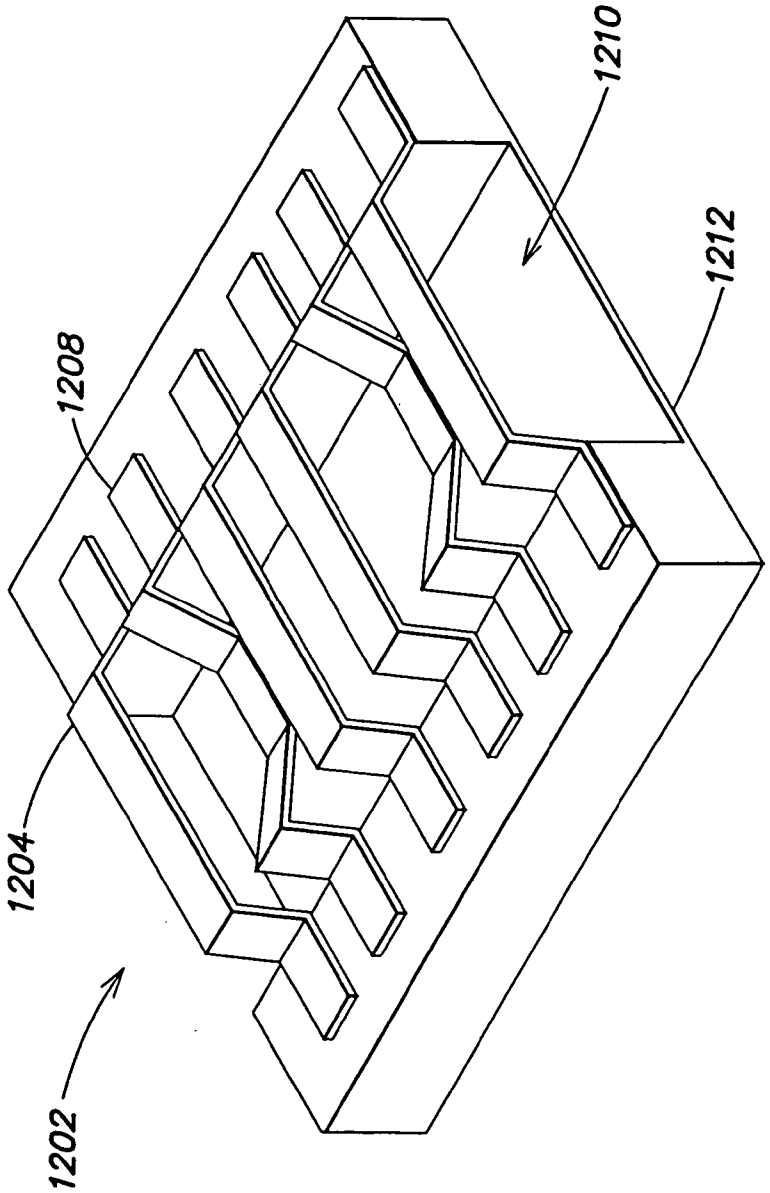

FIG. 12

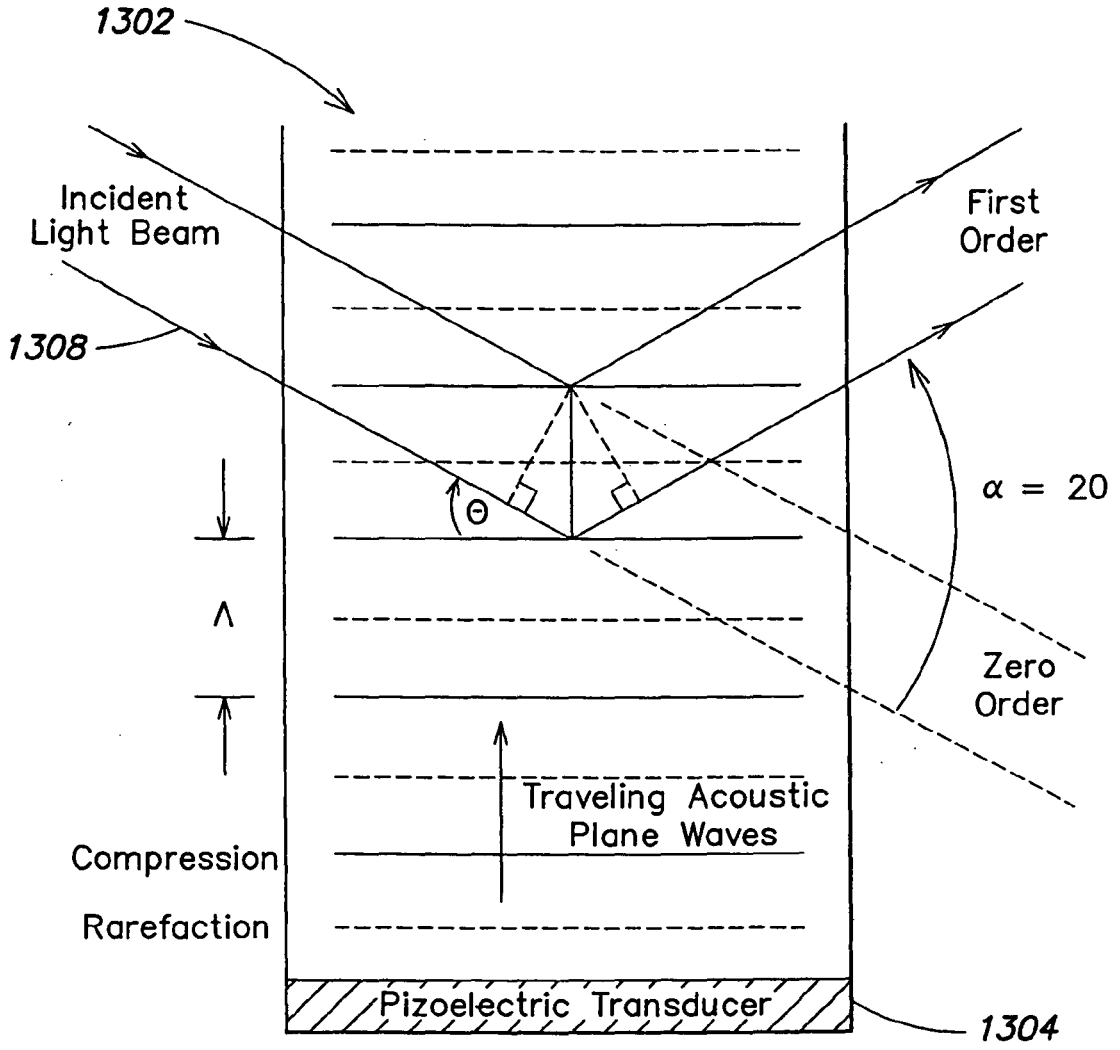
1302
Incident
Light Beam
1308
First
Order
α = 20
Θ
Λ
Zero
Order
Traveling Acoustic
Plane Waves
Compression
Rarefaction
Pizoelectric Transducer
1304

FIG. 13

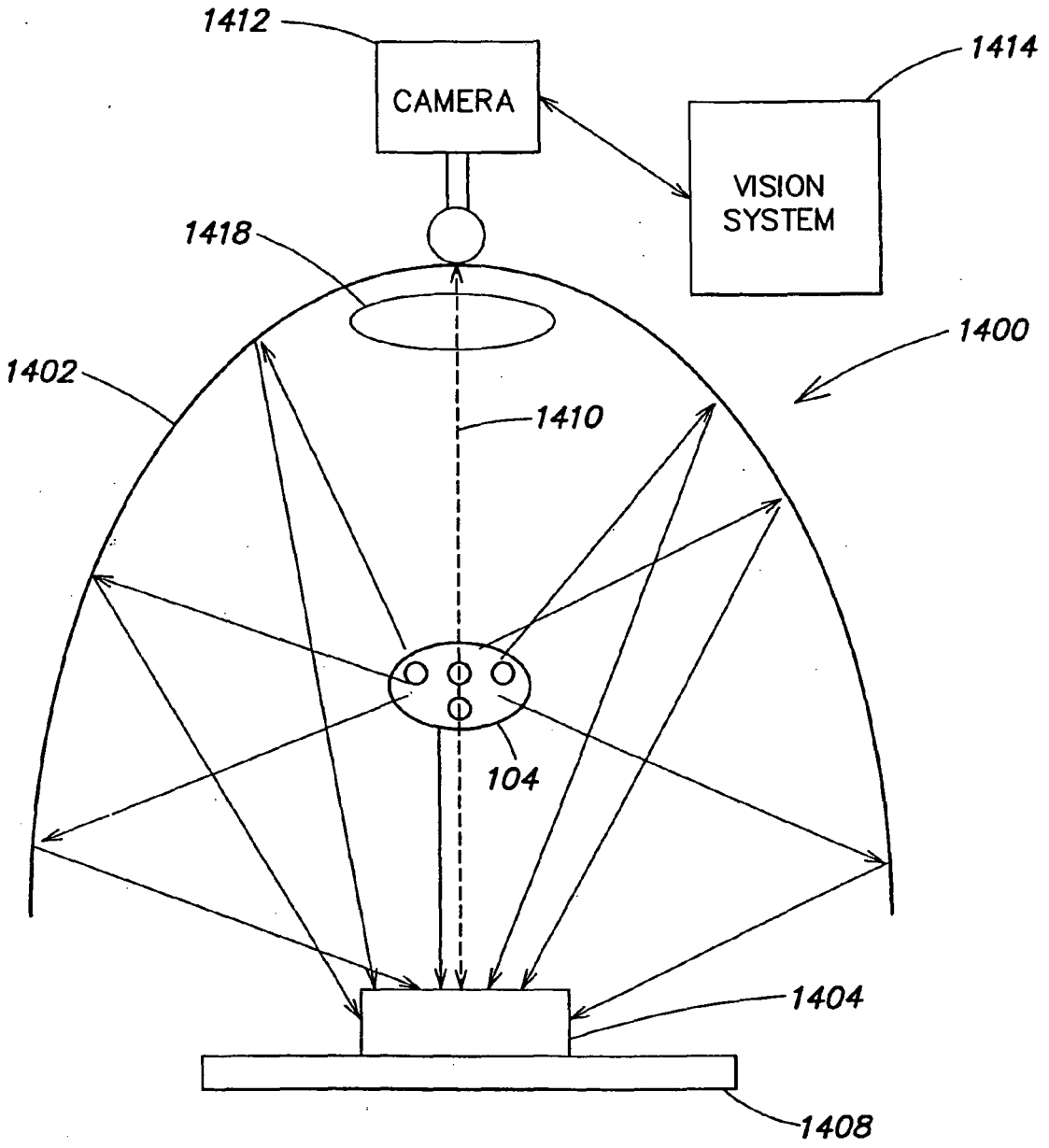
1412
CAMERA
1414
VISION SYSTEM
1418
1400
1402
1410
104
1404
1408

FIG. 14

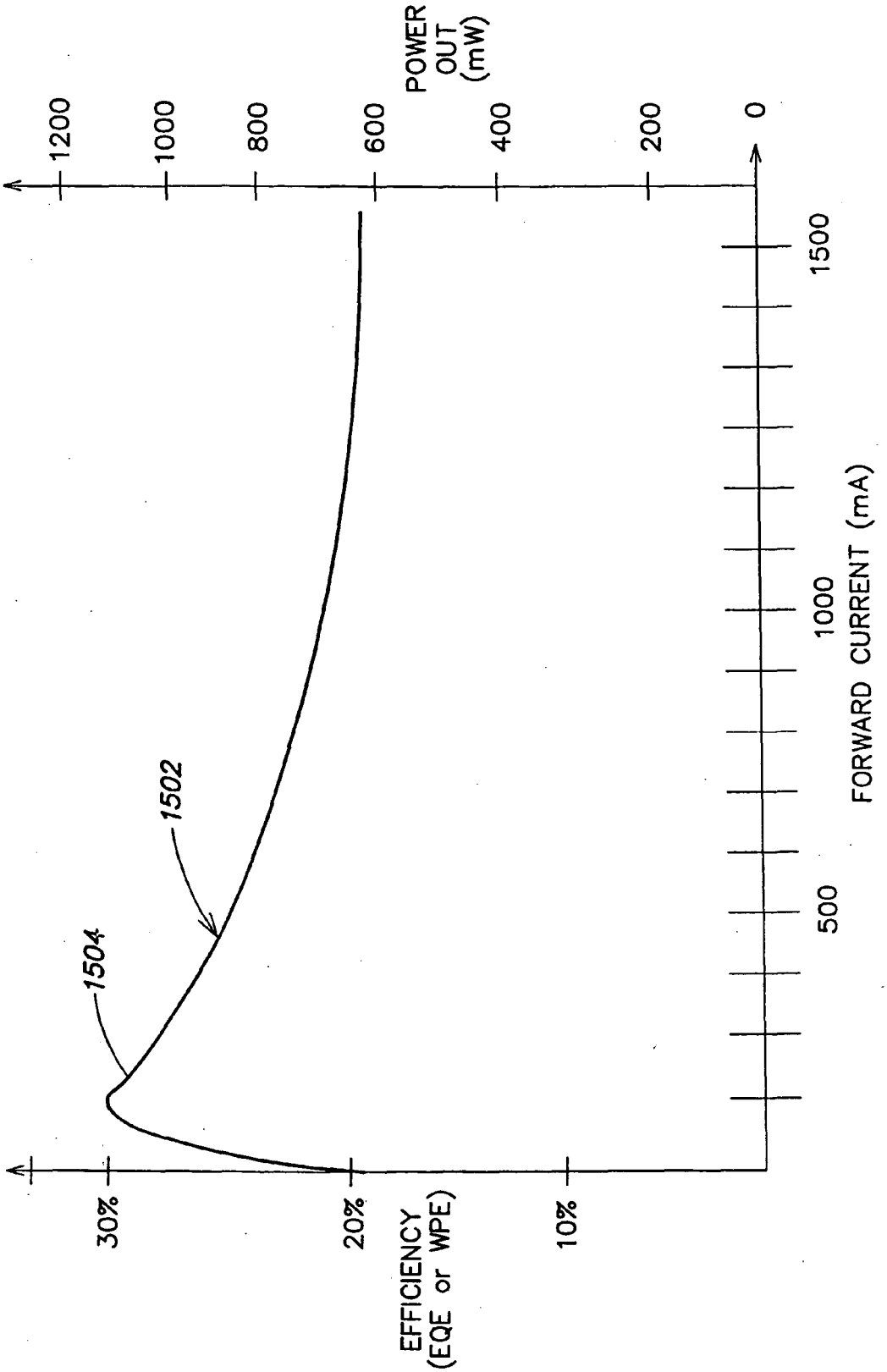
POWER OUT (mW)
1200
1000
800
600
400
200
0
1500
1000
500
FORWARD CURRENT (mA)
1502
1504
30%
20%
10%
EFFICIENCY (EQE or WPE)

FIG. 15

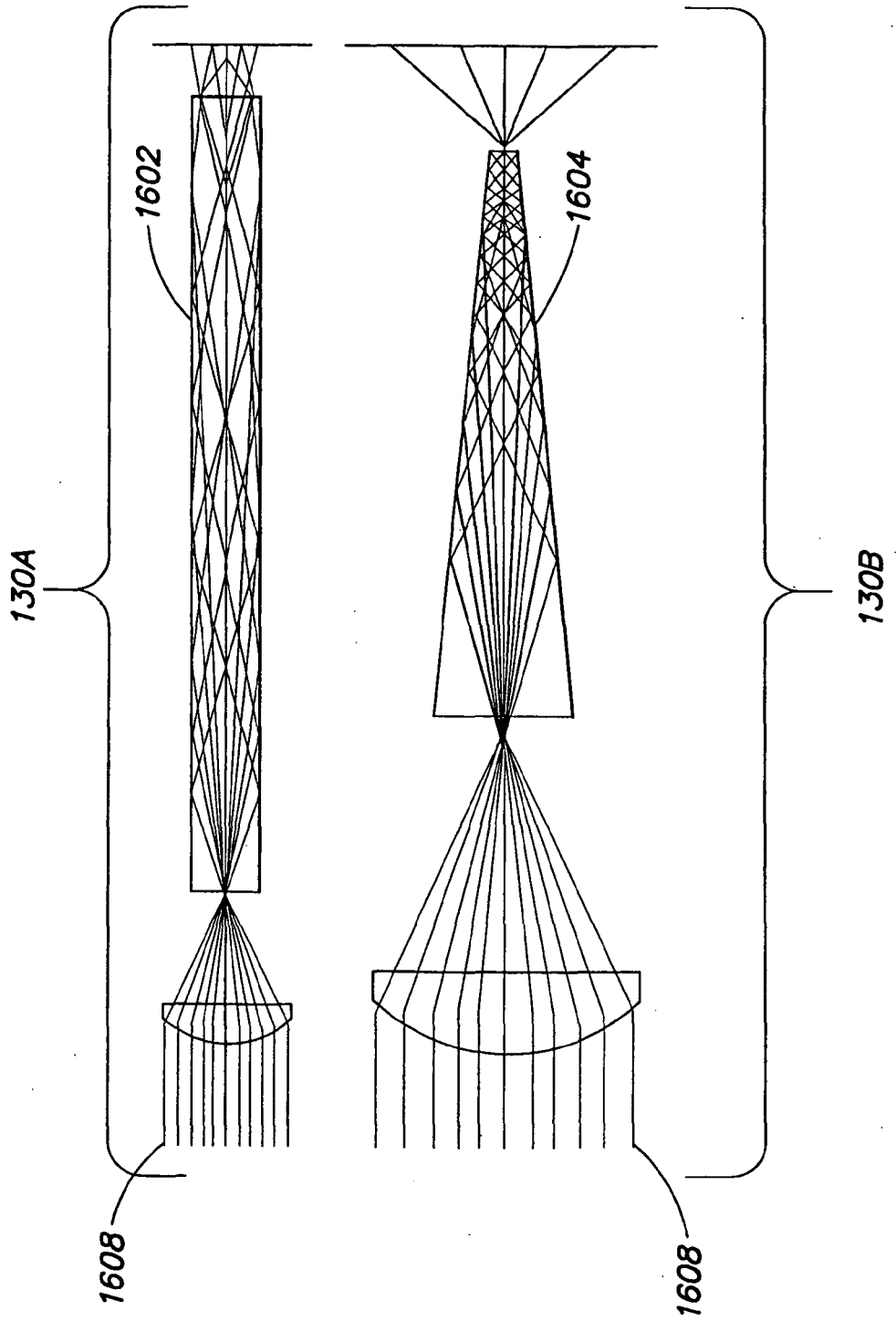

FIG. 16

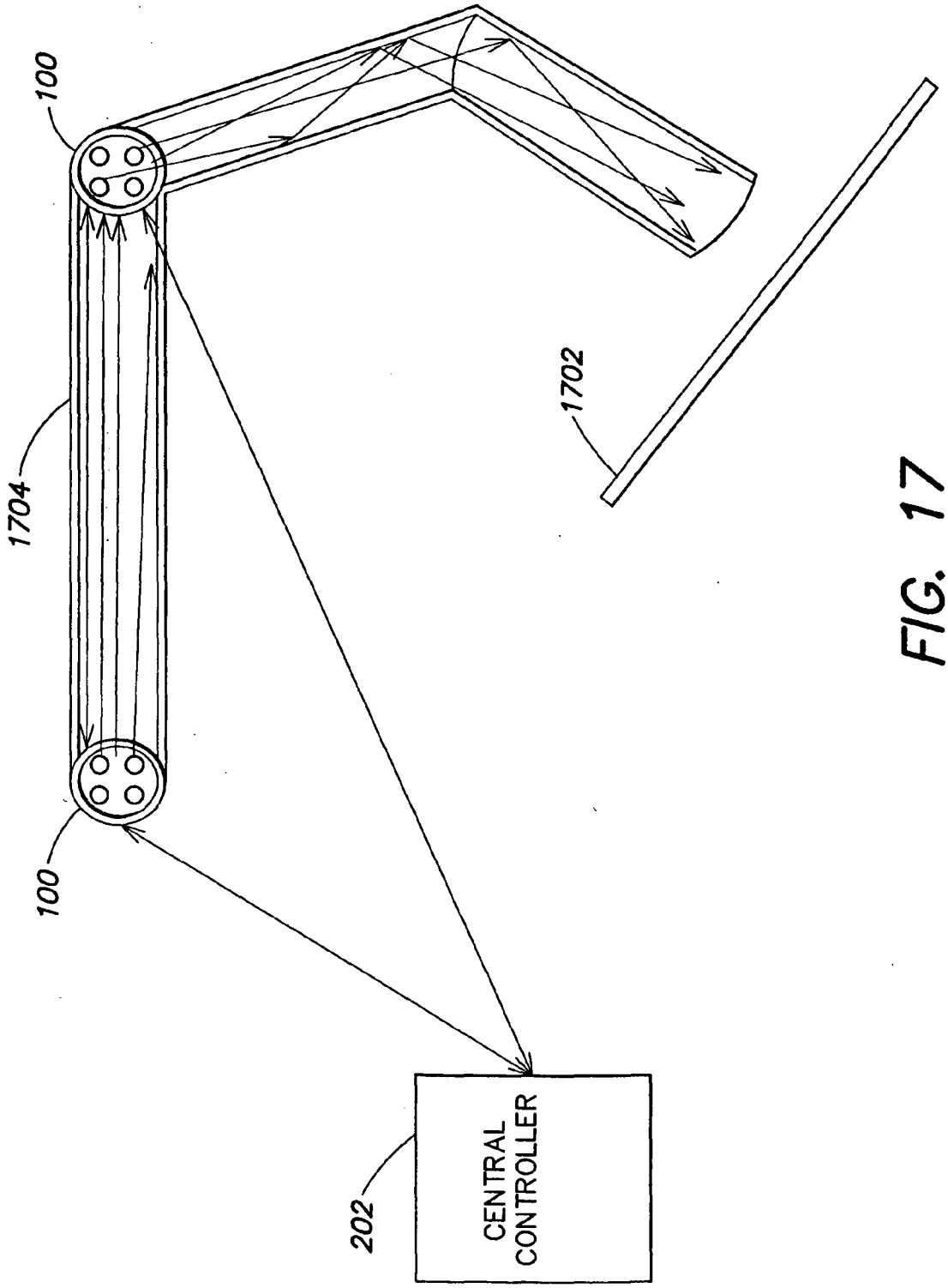

FIG. 17

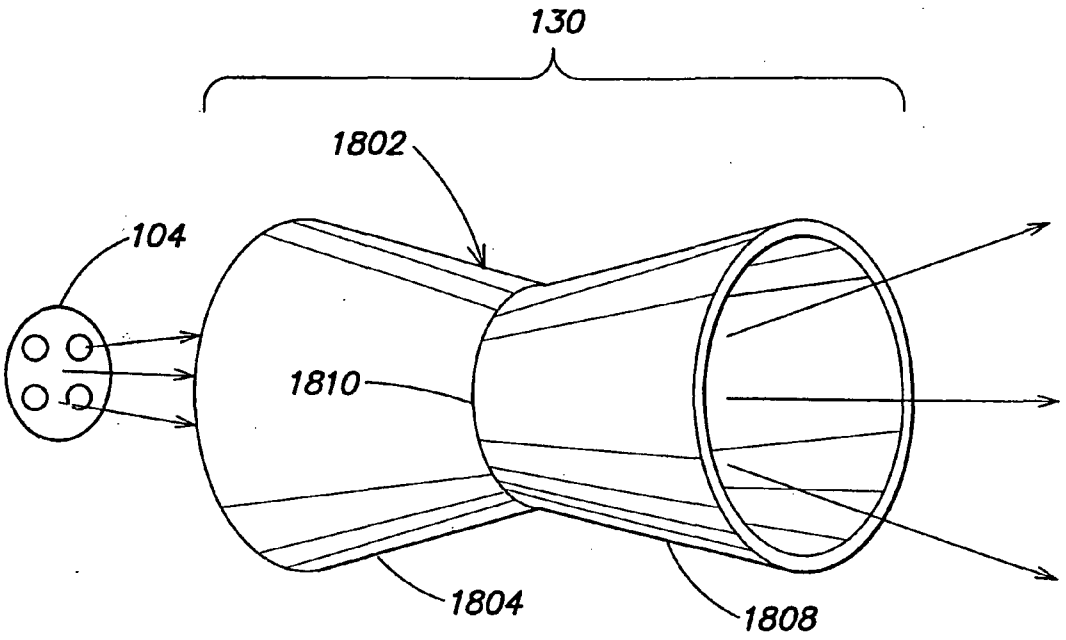

FIG. 18

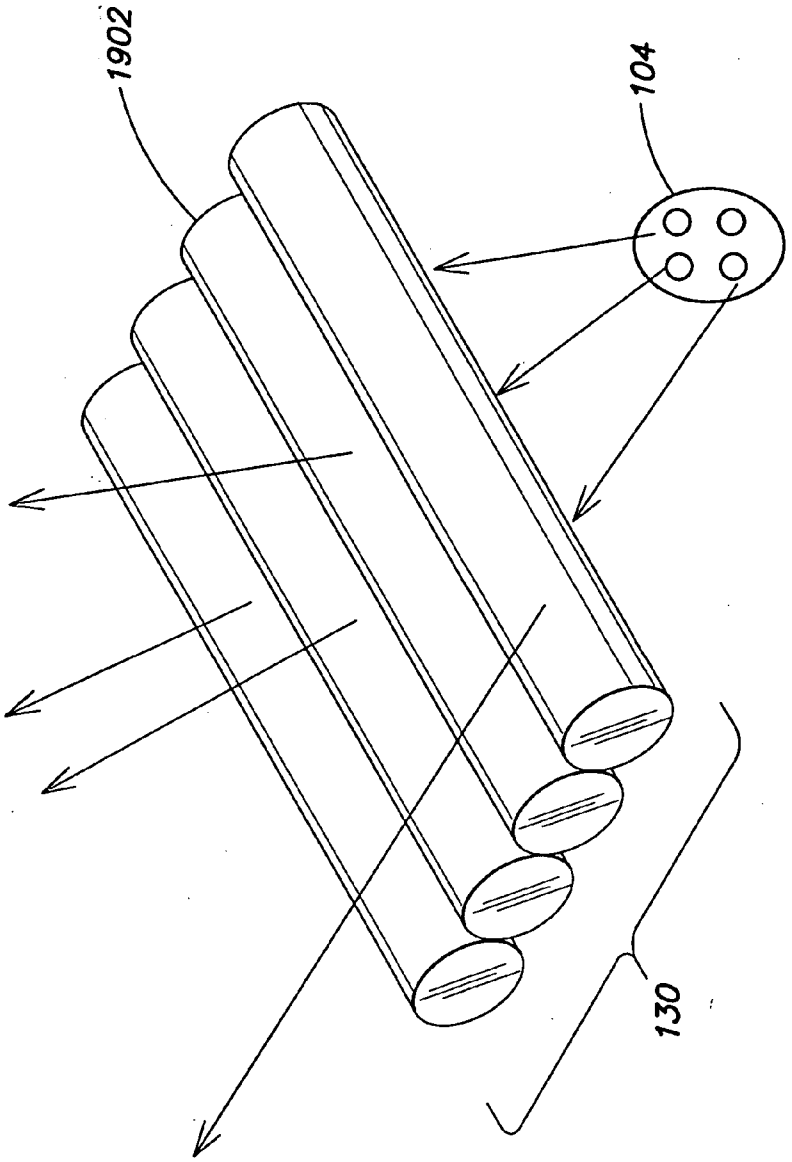

FIG. 19

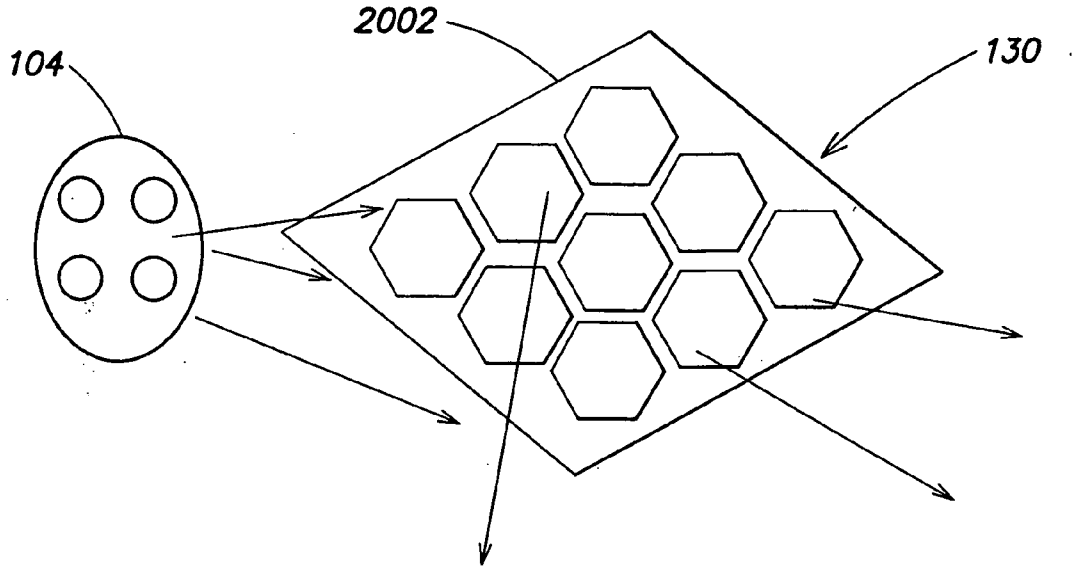

FIG. 20

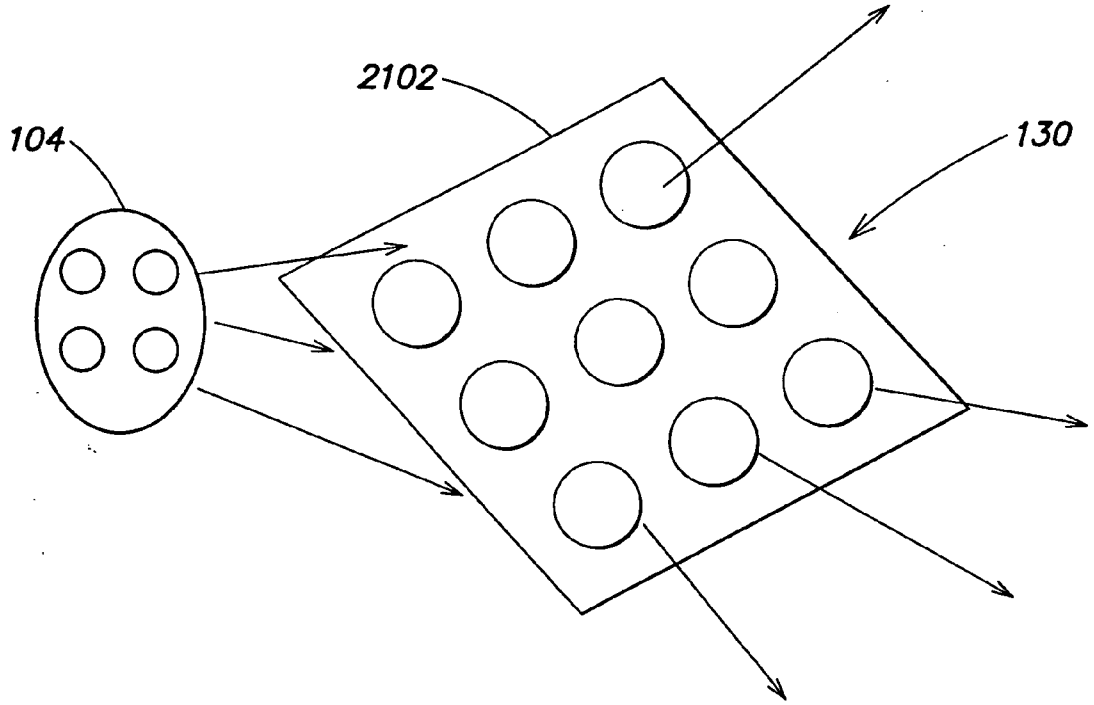

FIG. 21

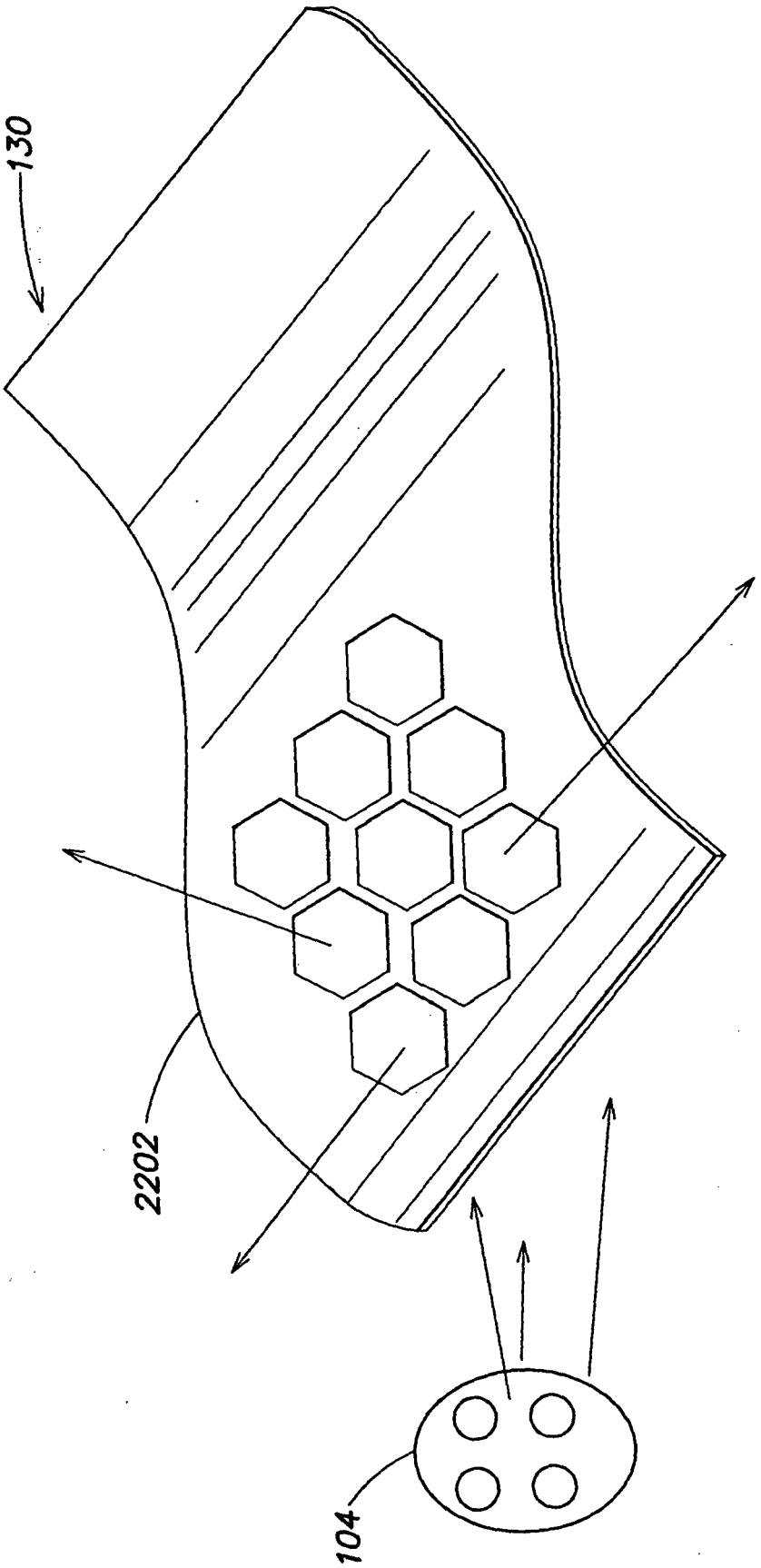

FIG. 22

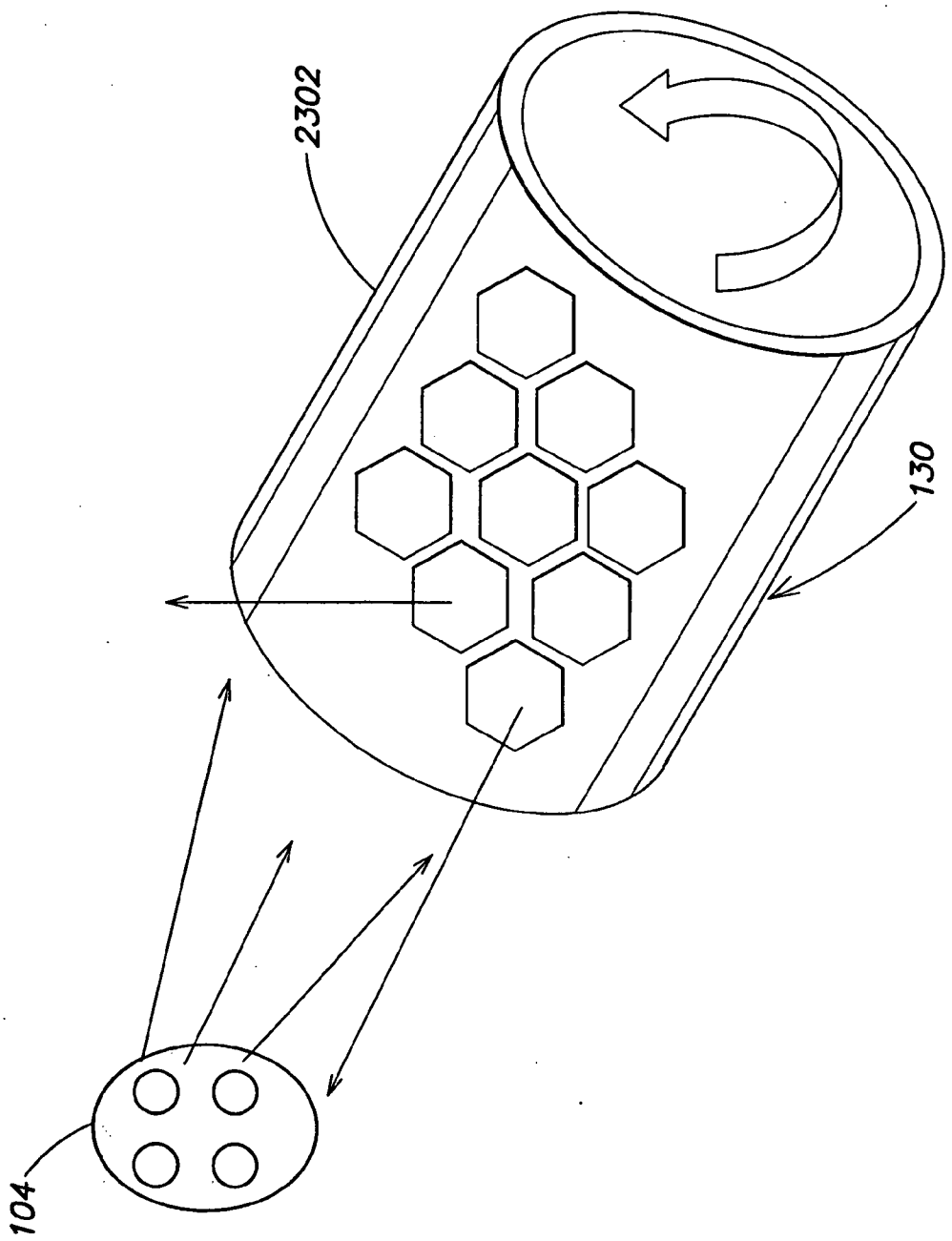

FIG. 23

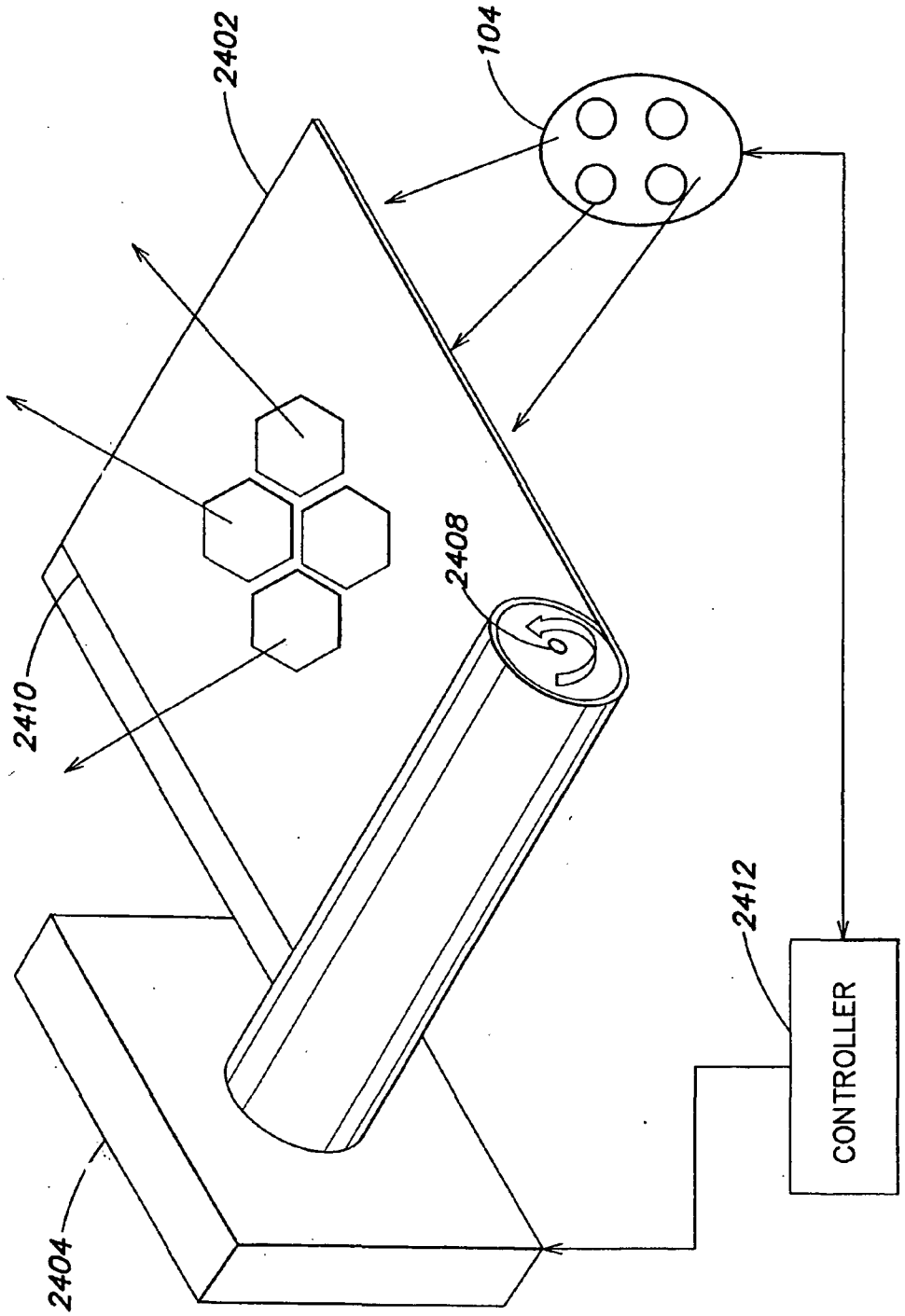

FIG. 24

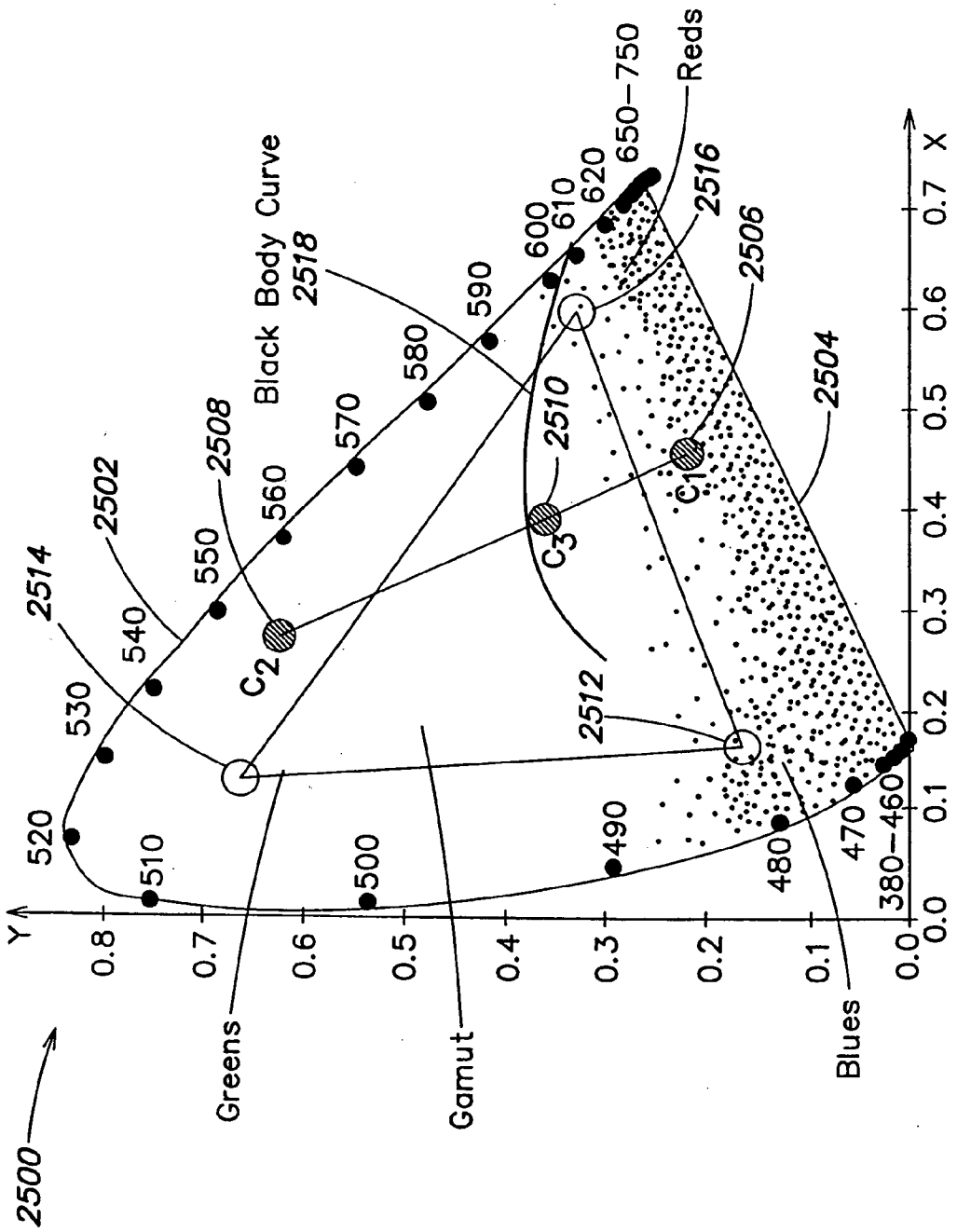
2500
Y
X
0.0
0.1
0.2
0.3
0.4
0.5
0.6
0.7
0.8
Greens
Gamut
Blues
Reds
Black Body Curve
2502
2504
2506
2508
2510
2512
2514
2516
2518
C1
C2
C3
380–460
470
480
490
500
510
520
530
540
550
560
570
580
590
600
610
620
650–750

FIG. 25

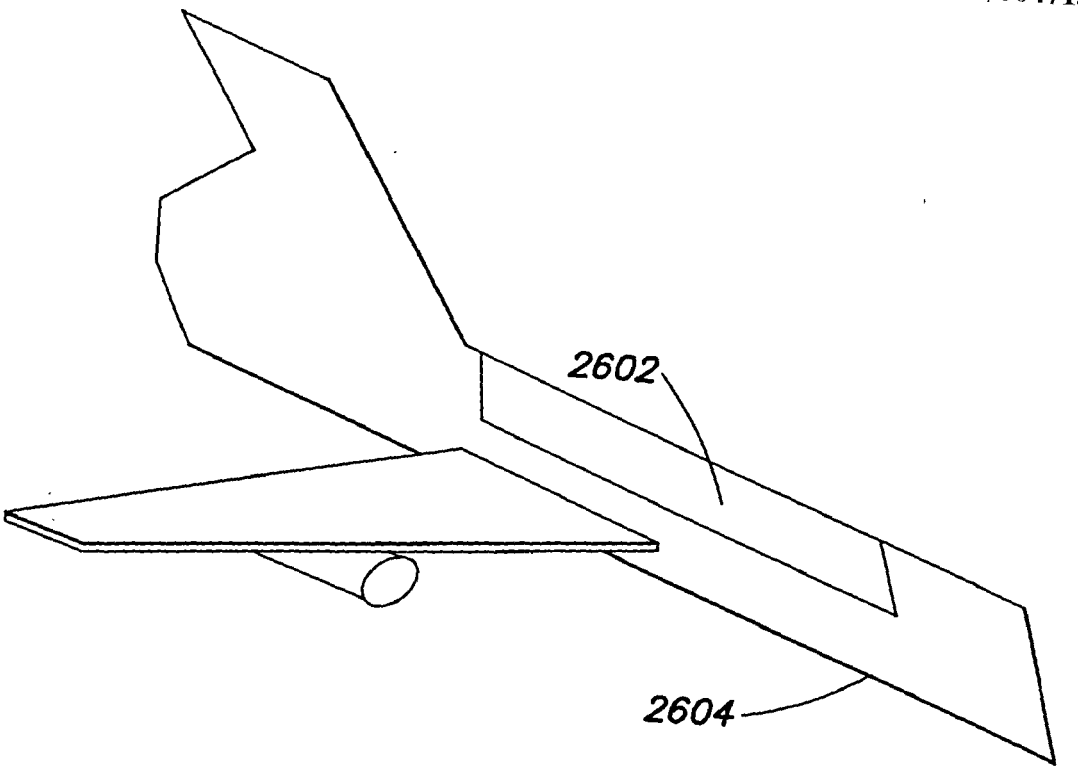

FIG. 26

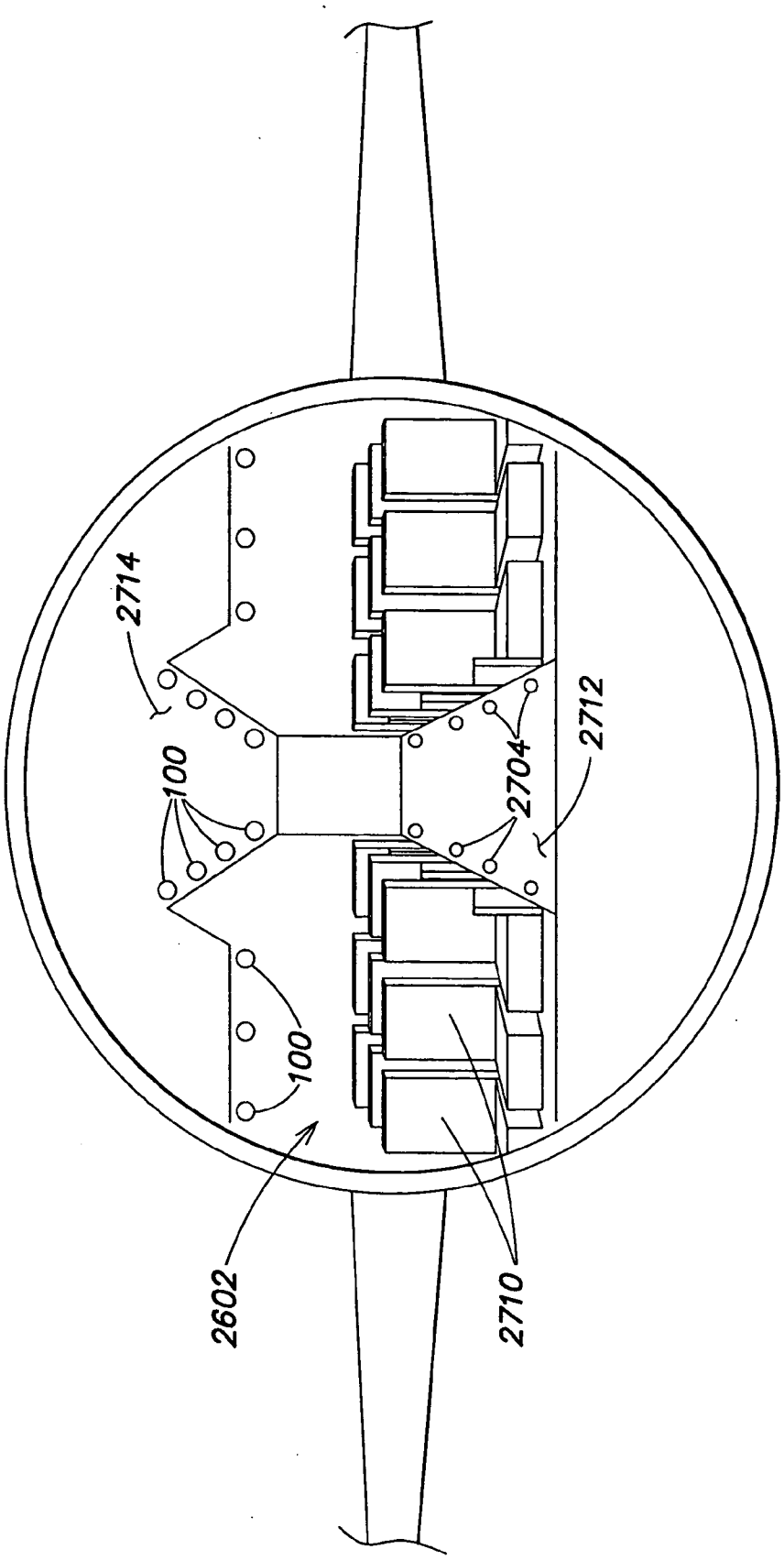

FIG. 27

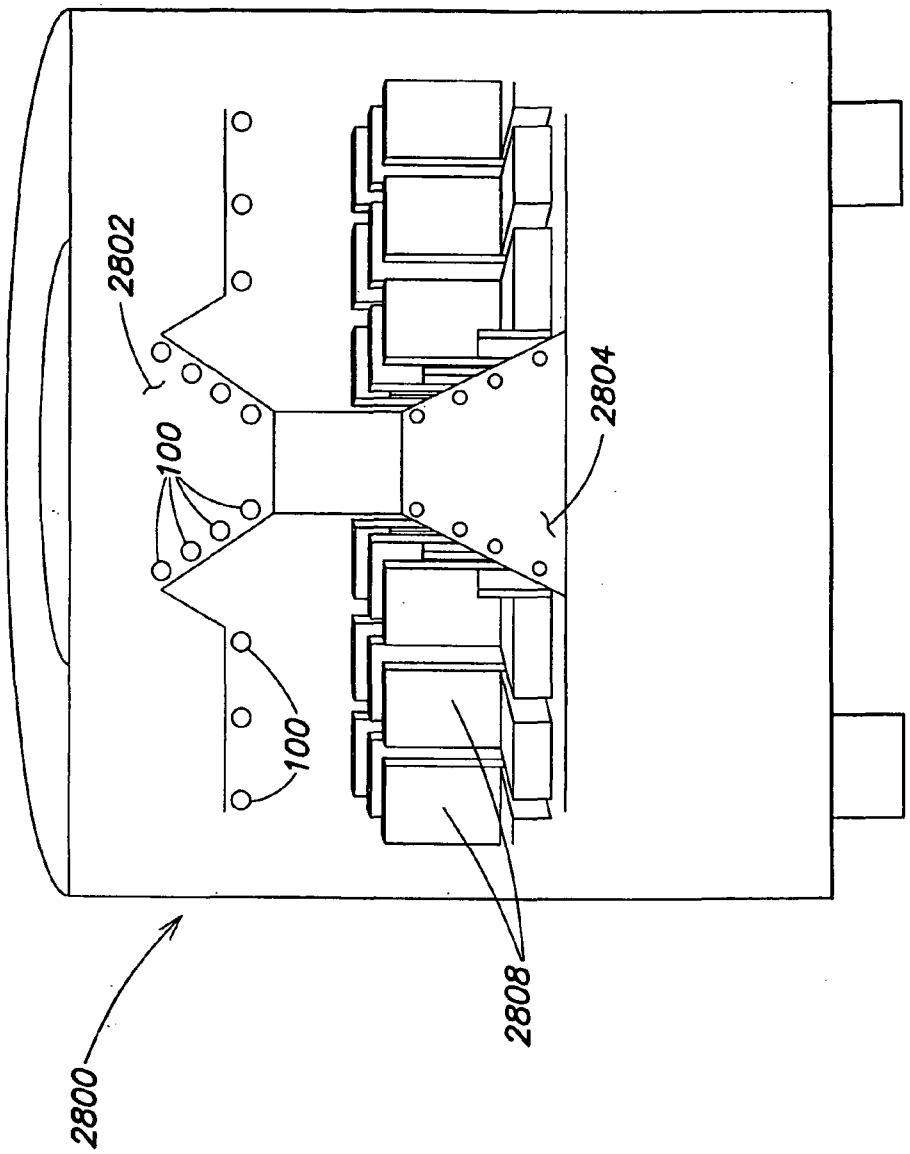

FIG. 28

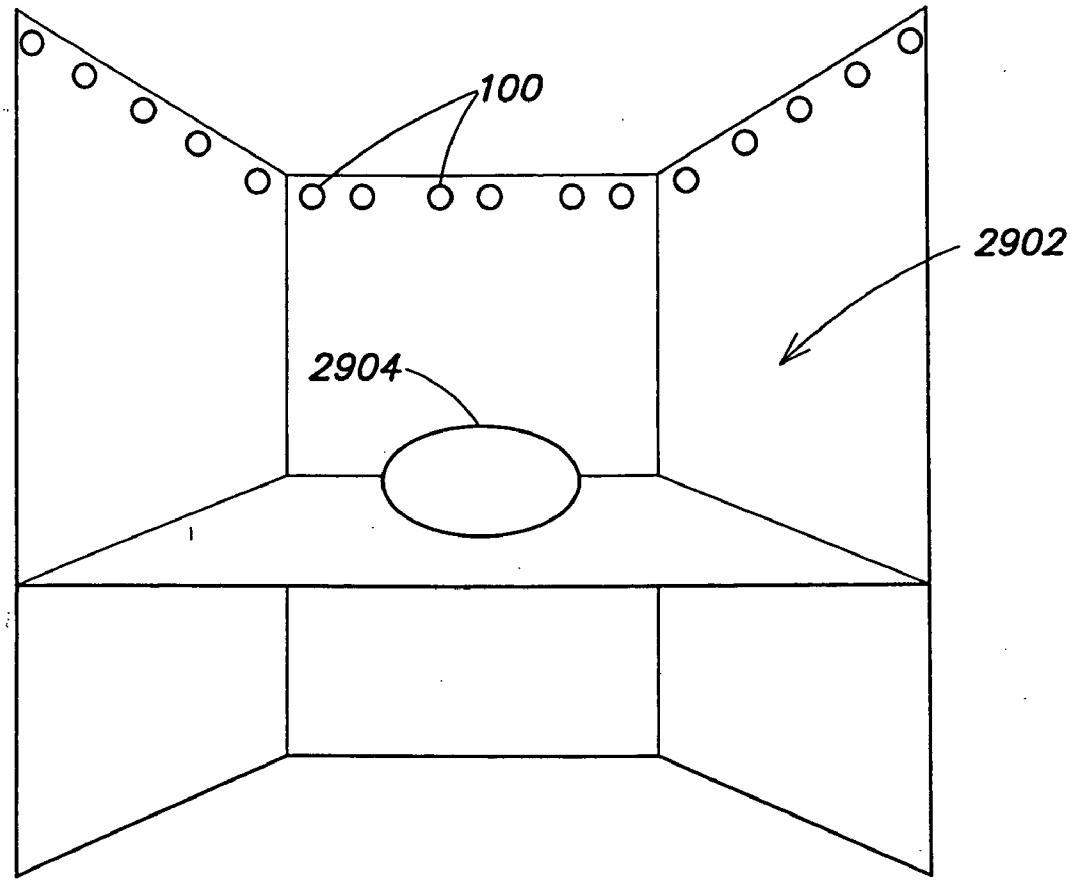

FIG. 29

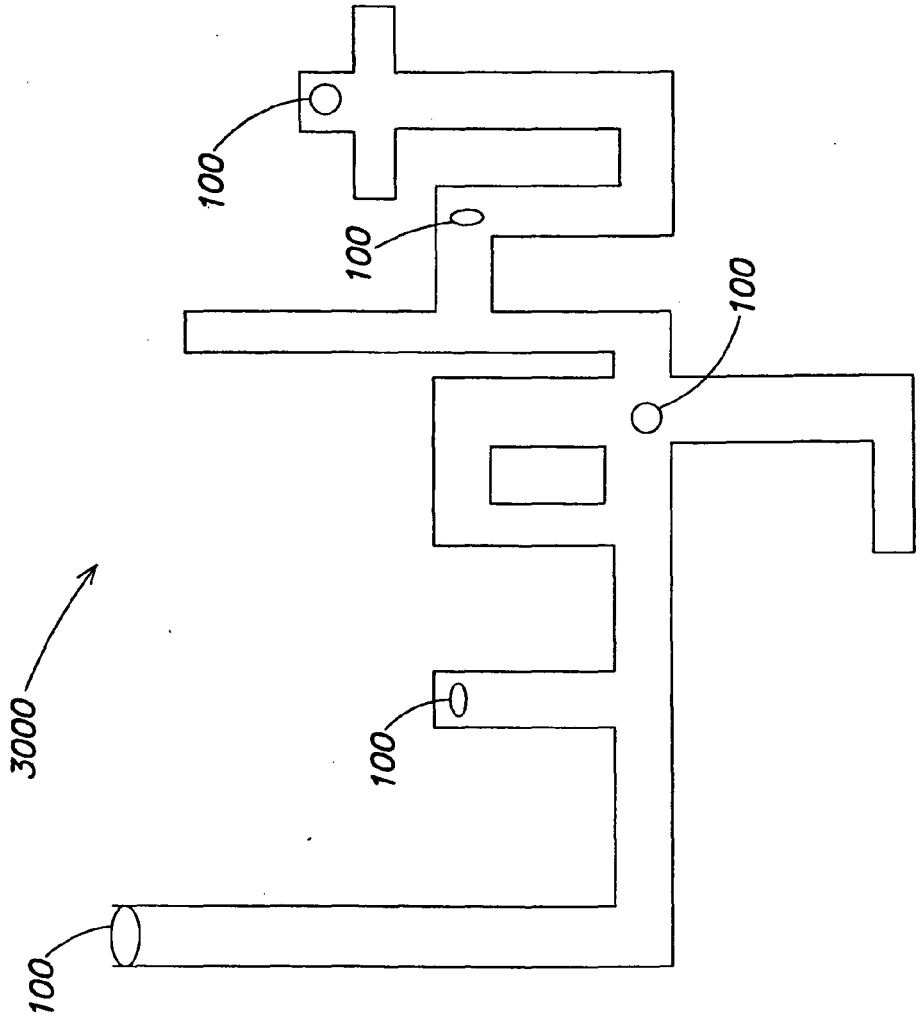

FIG. 30

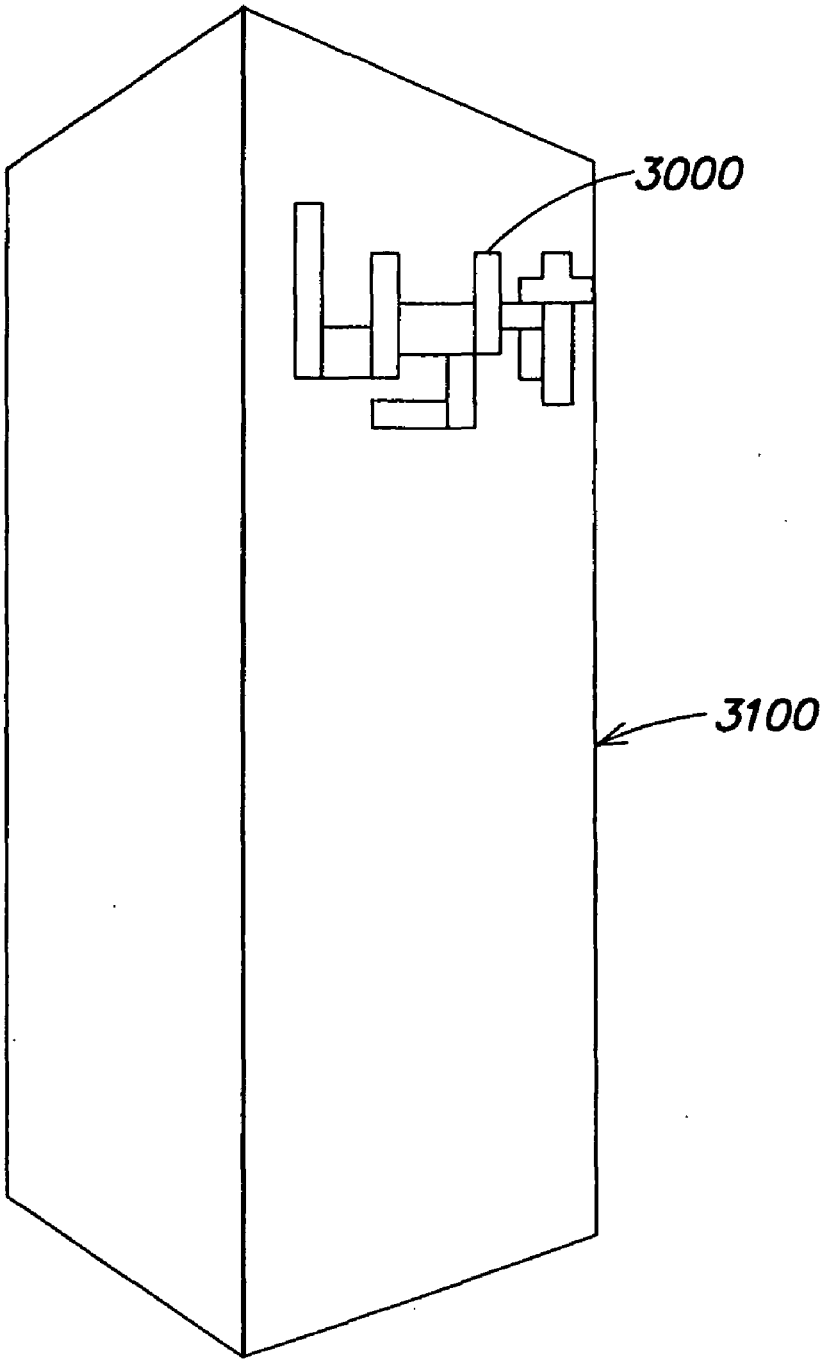

FIG. 31

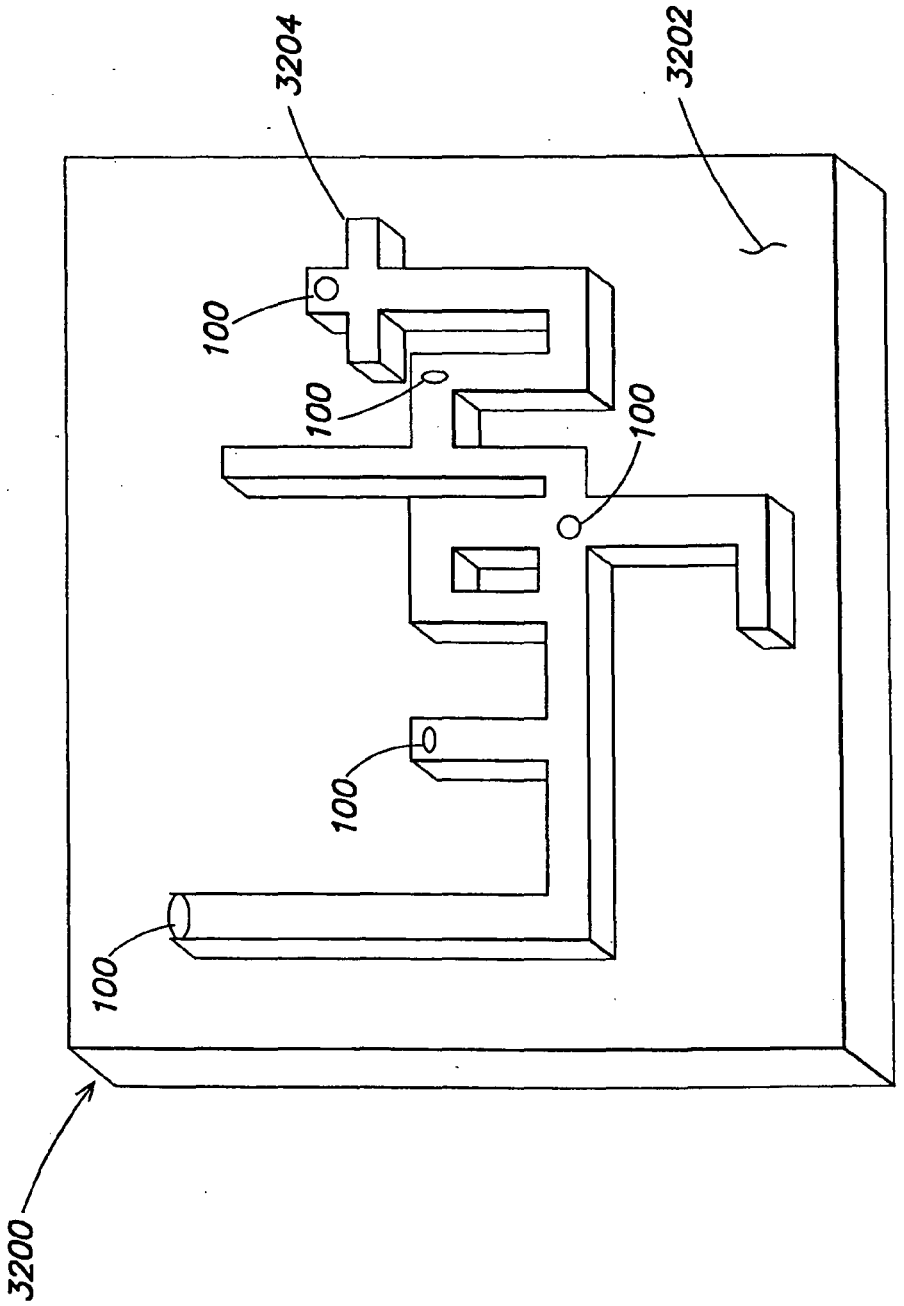

FIG. 32

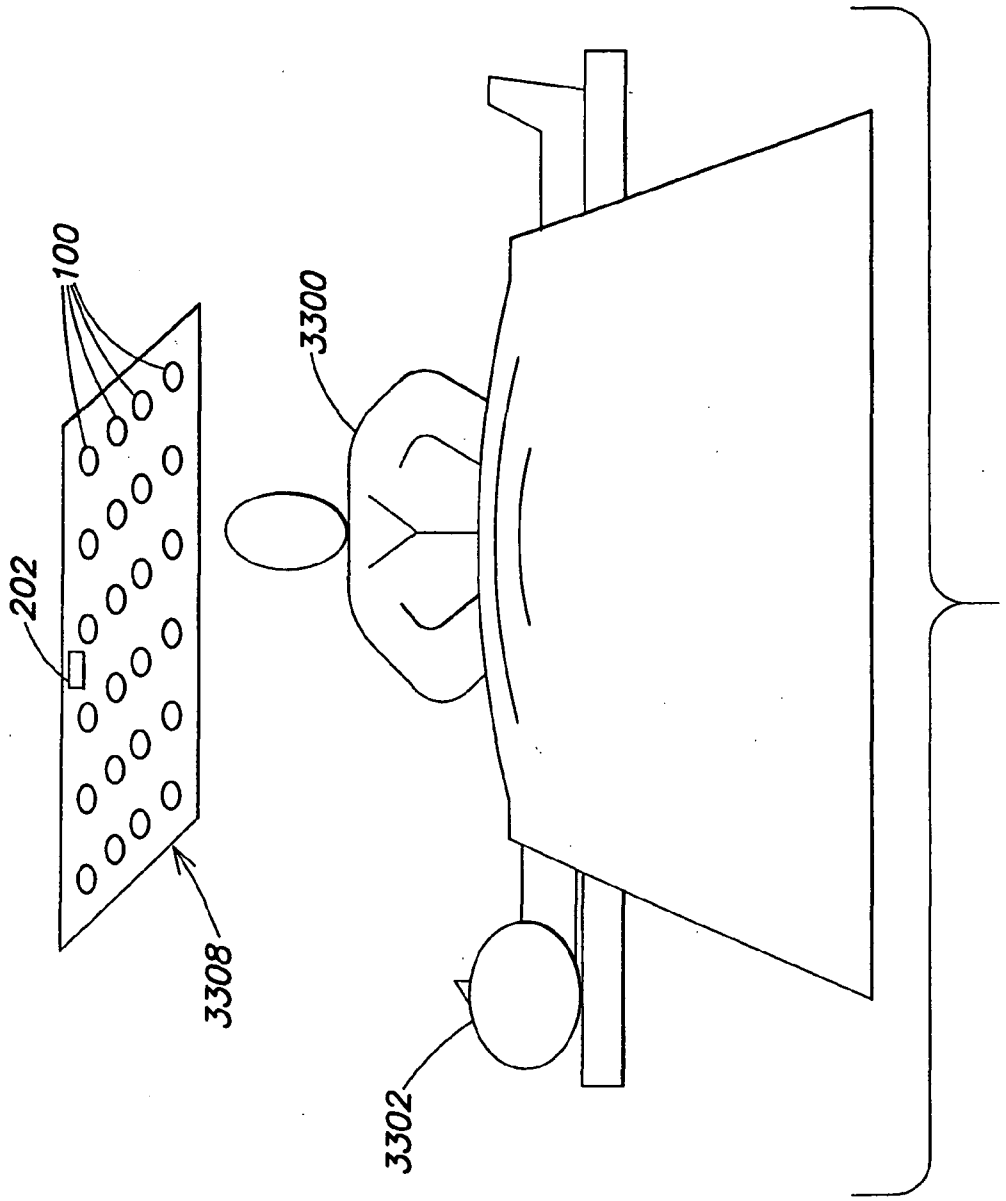

FIG. 33

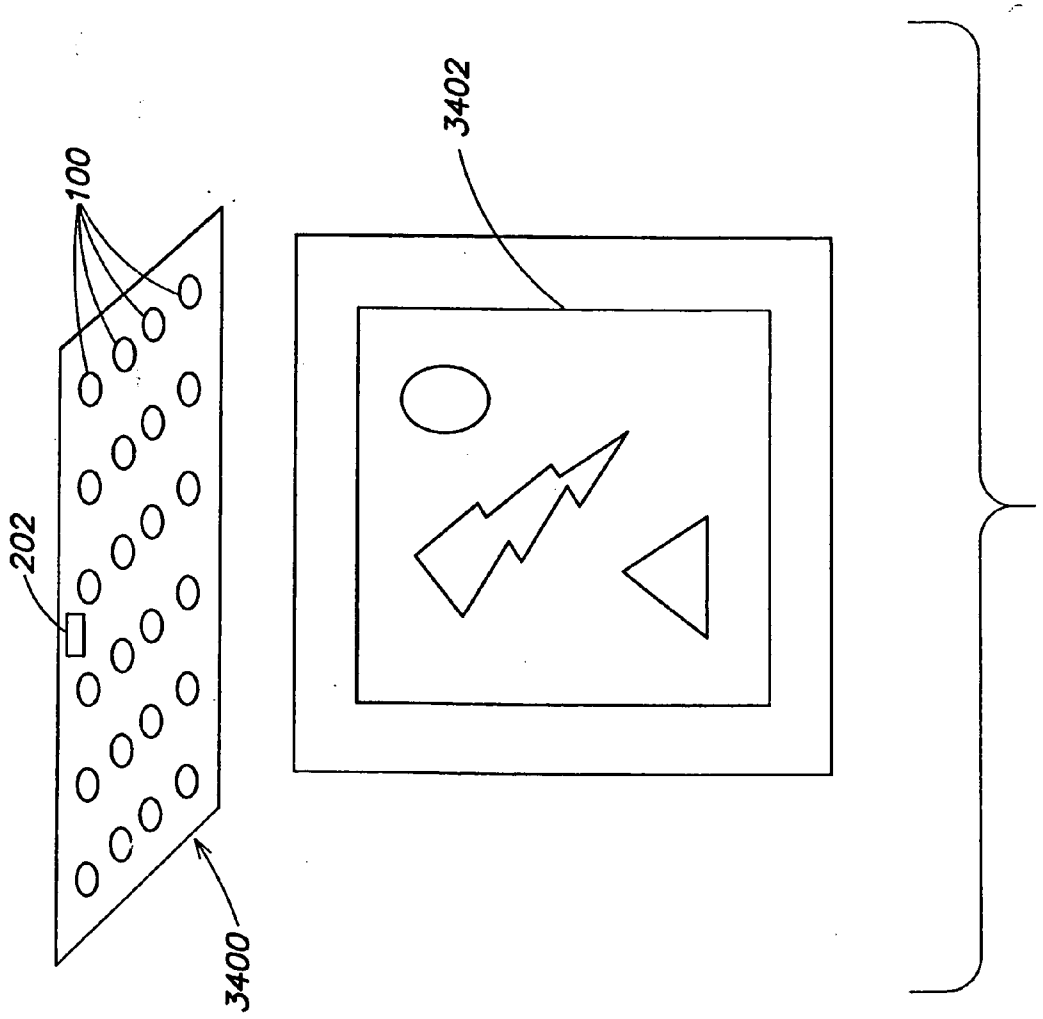

FIG. 34

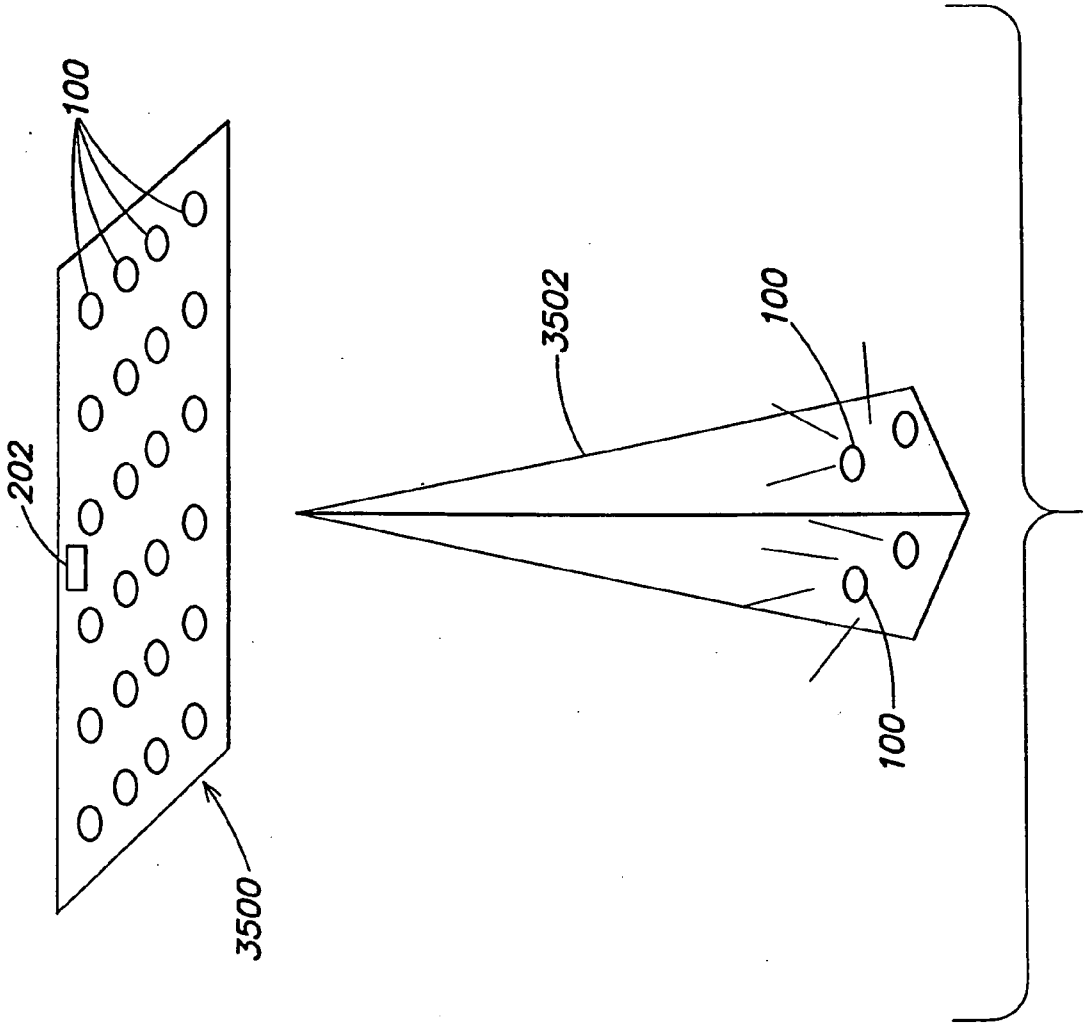

FIG. 35

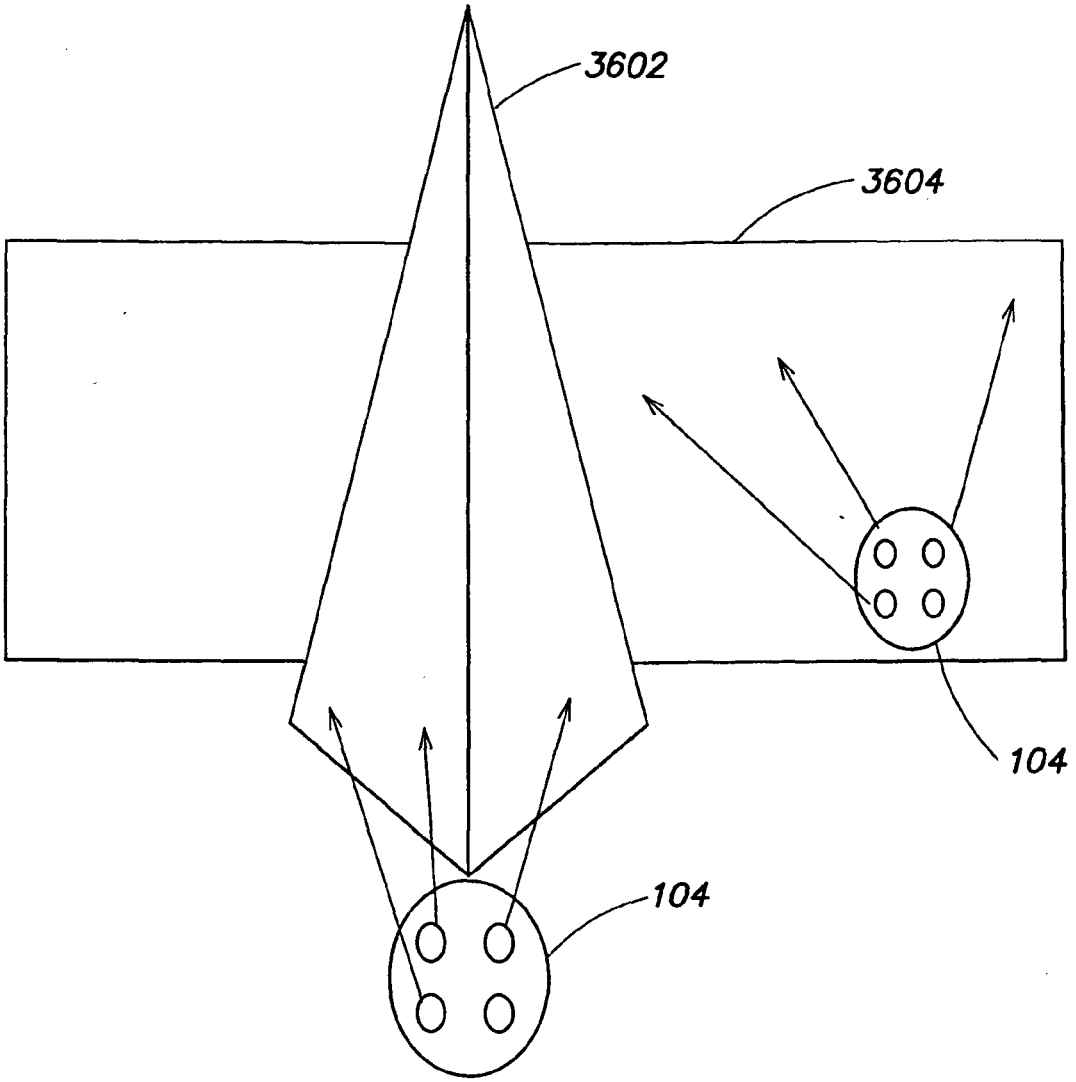

FIG. 36

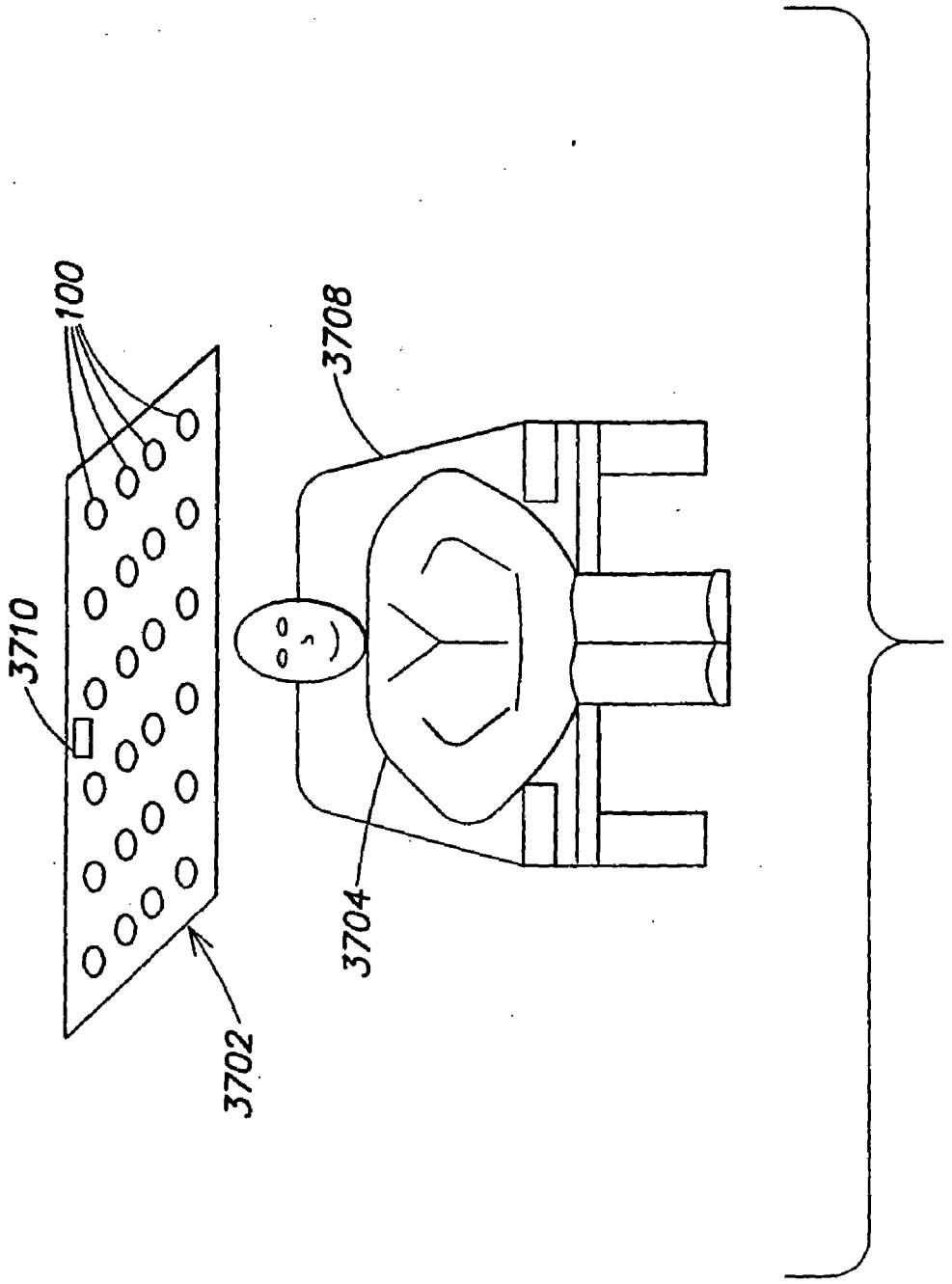

FIG. 37

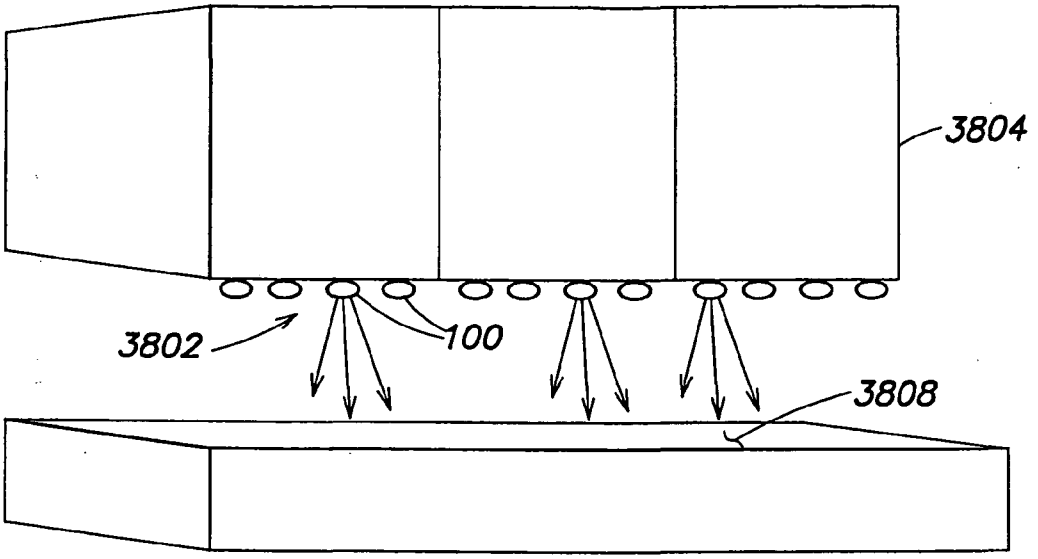

FIG. 38

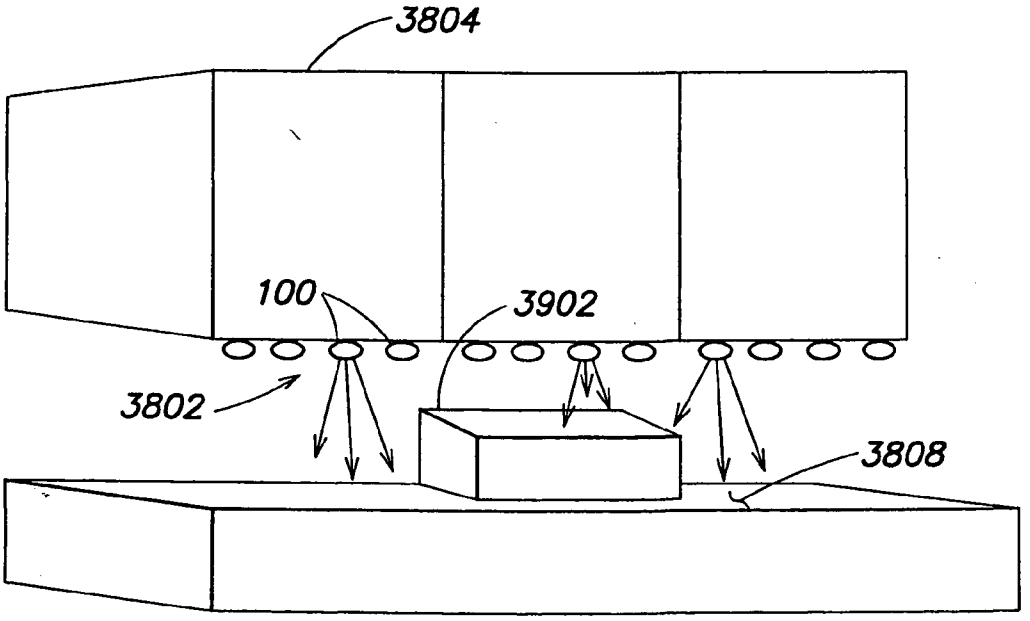

FIG. 39

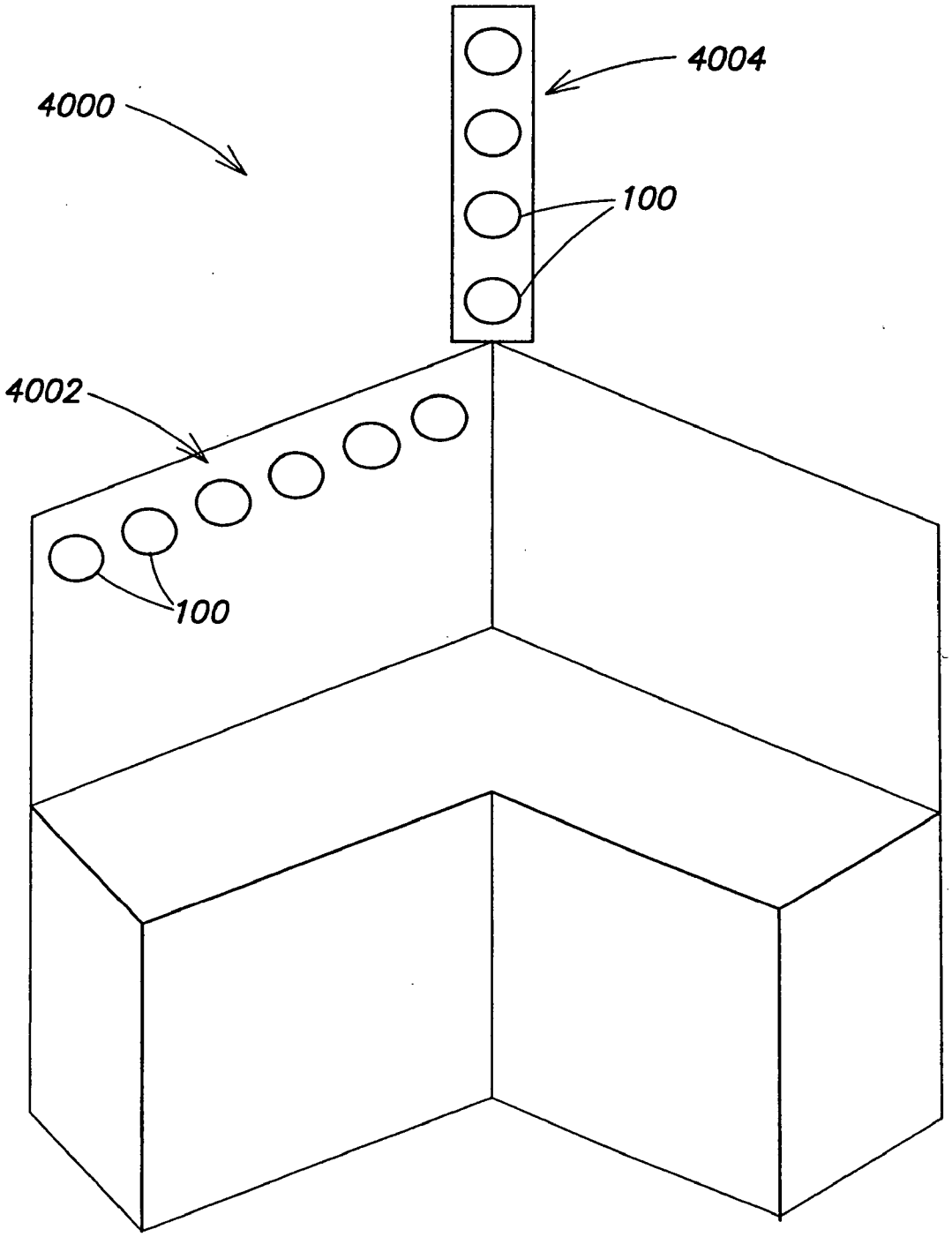

FIG. 40

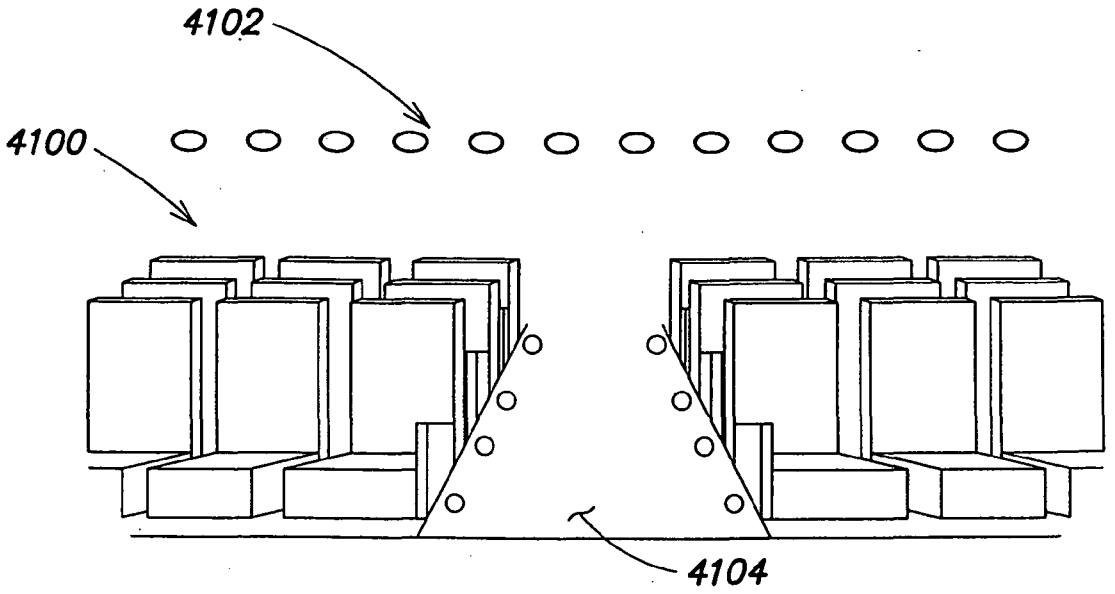

FIG. 41

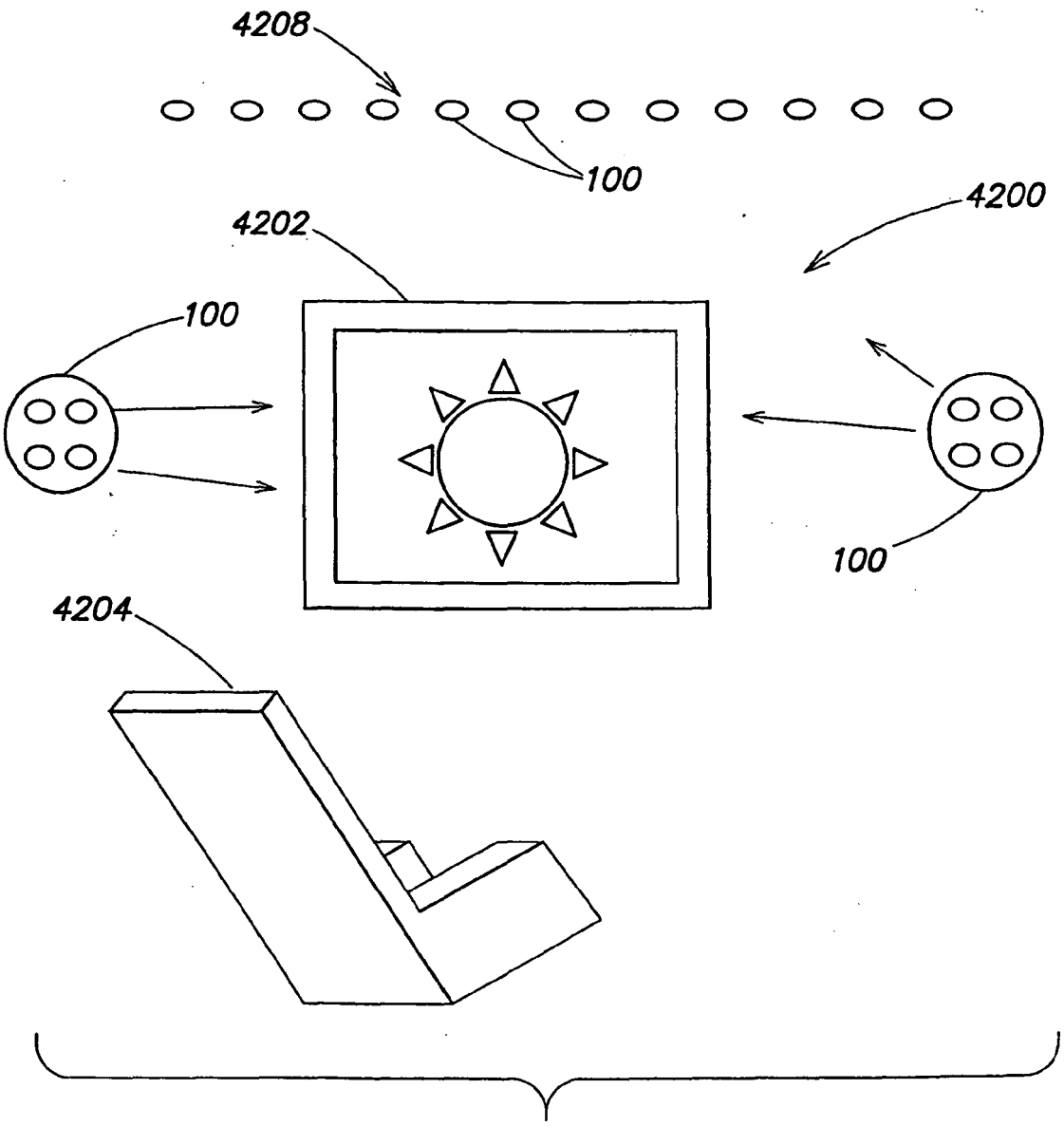

FIG. 42

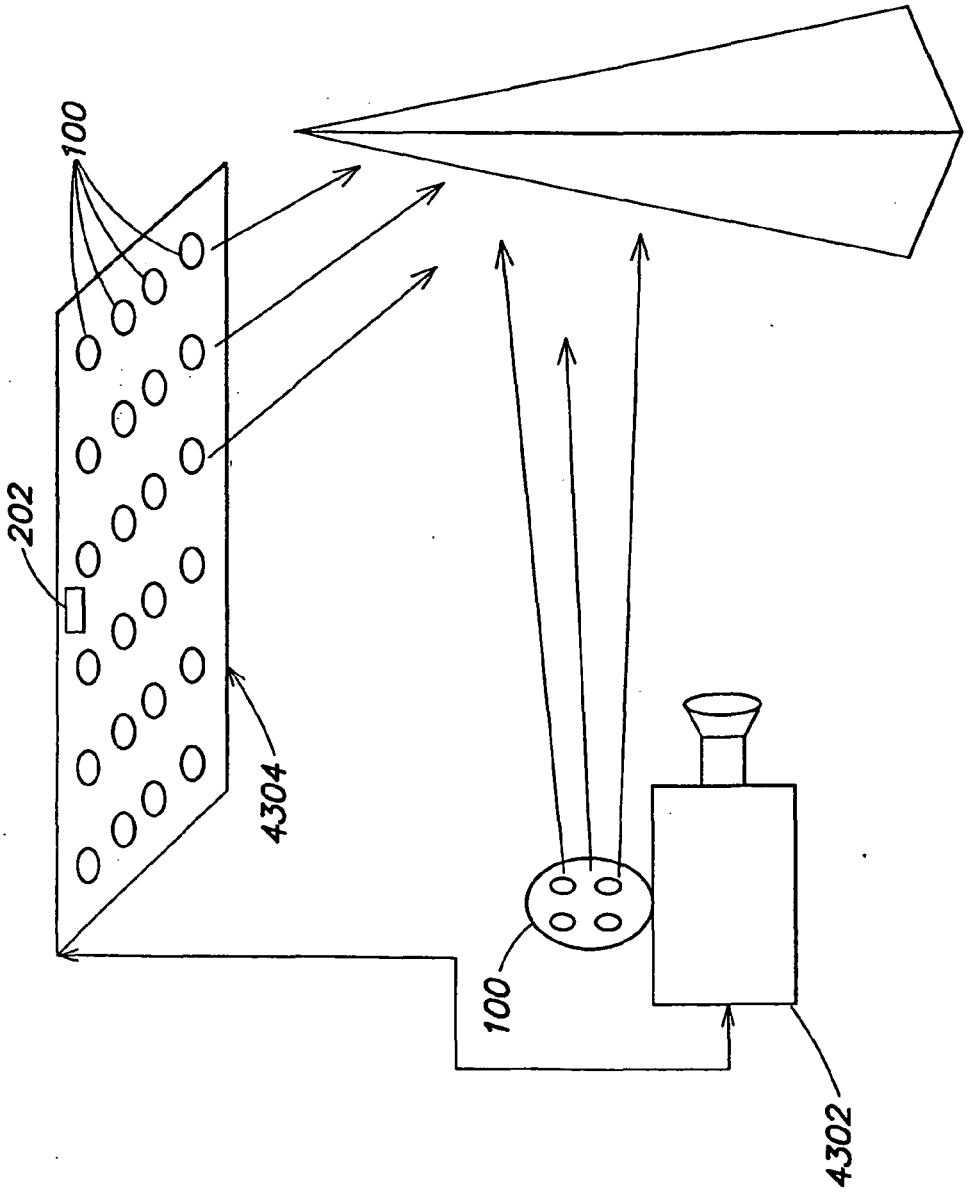

FIG. 43

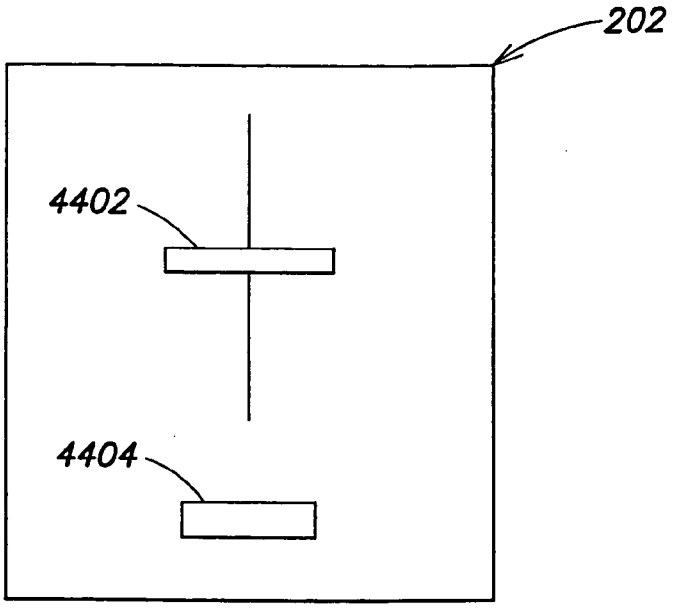

FIG. 44

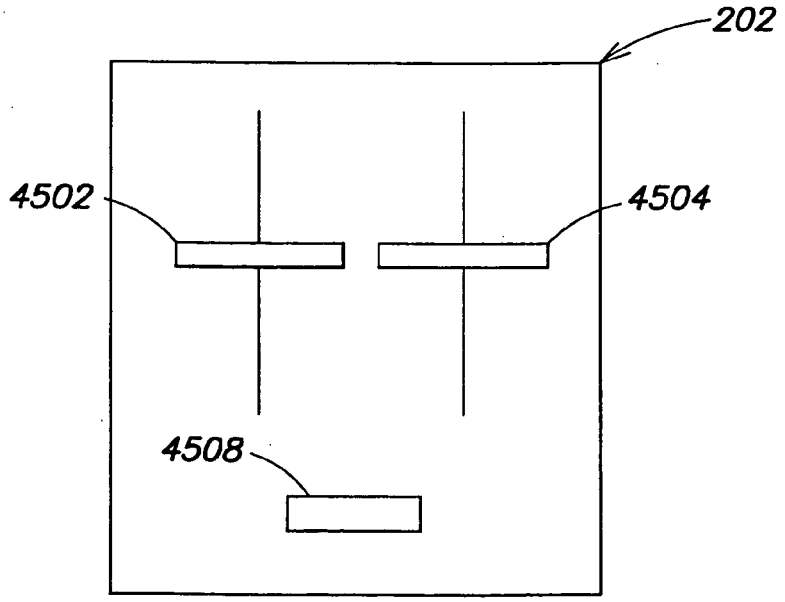

FIG. 45

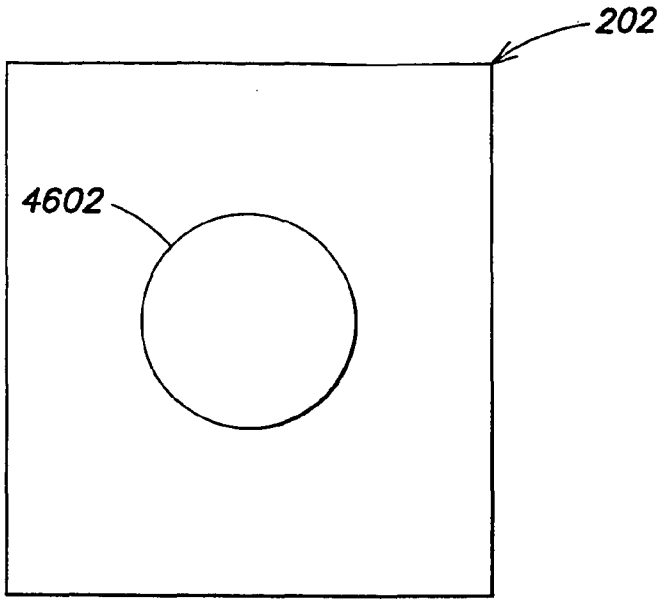

FIG. 46

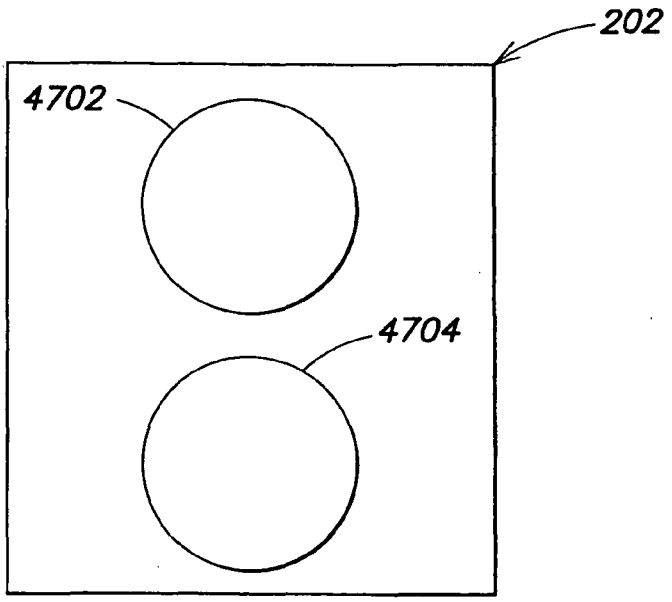

FIG. 47

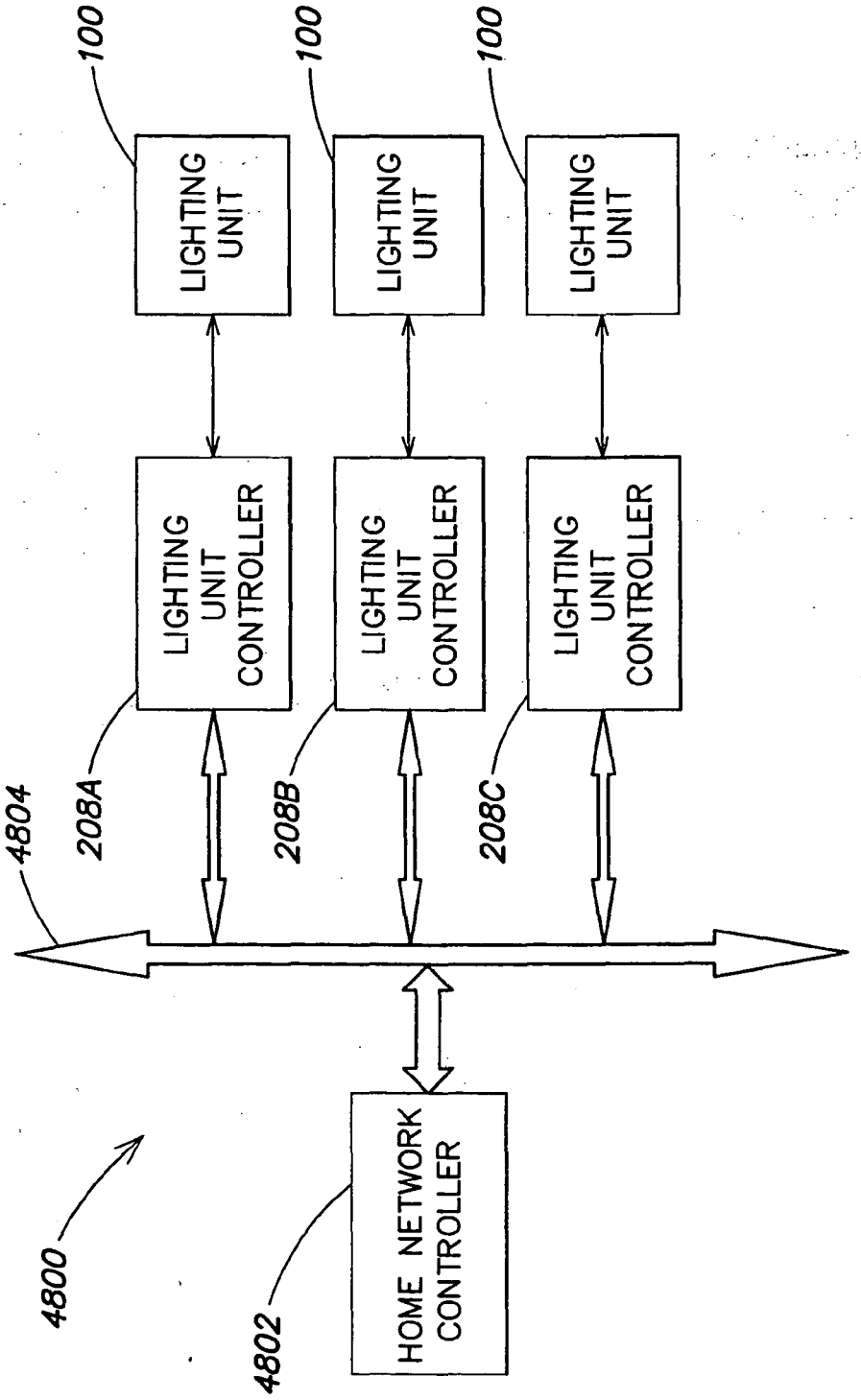
100
100
100
LIGHTING UNIT
LIGHTING UNIT
LIGHTING UNIT
LIGHTING UNIT CONTROLLER
LIGHTING UNIT CONTROLLER
LIGHTING UNIT CONTROLLER
208A
208B
208C
4804
4800
4802
HOME NETWORK CONTROLLER

FIG. 48

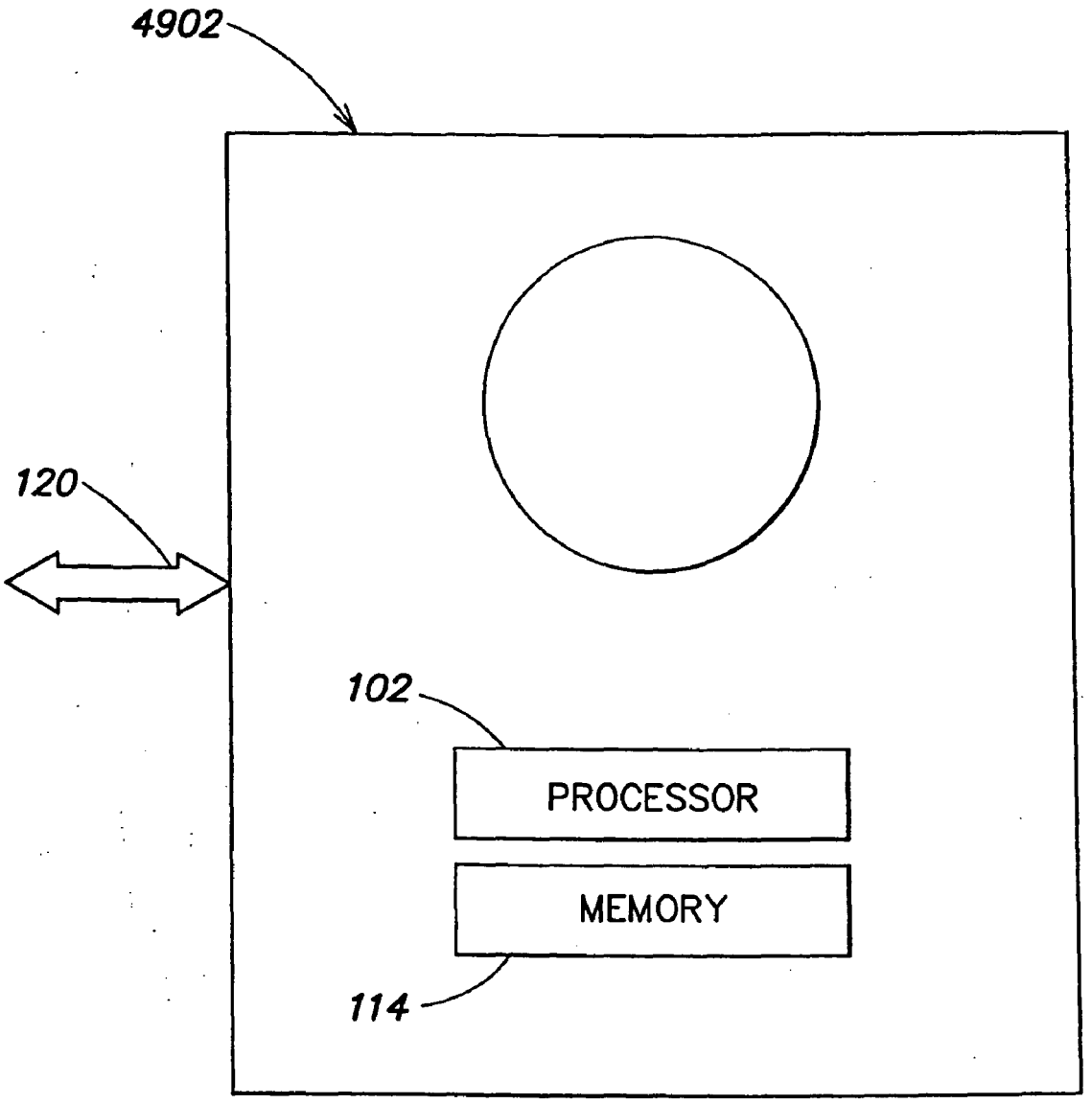

FIG. 49

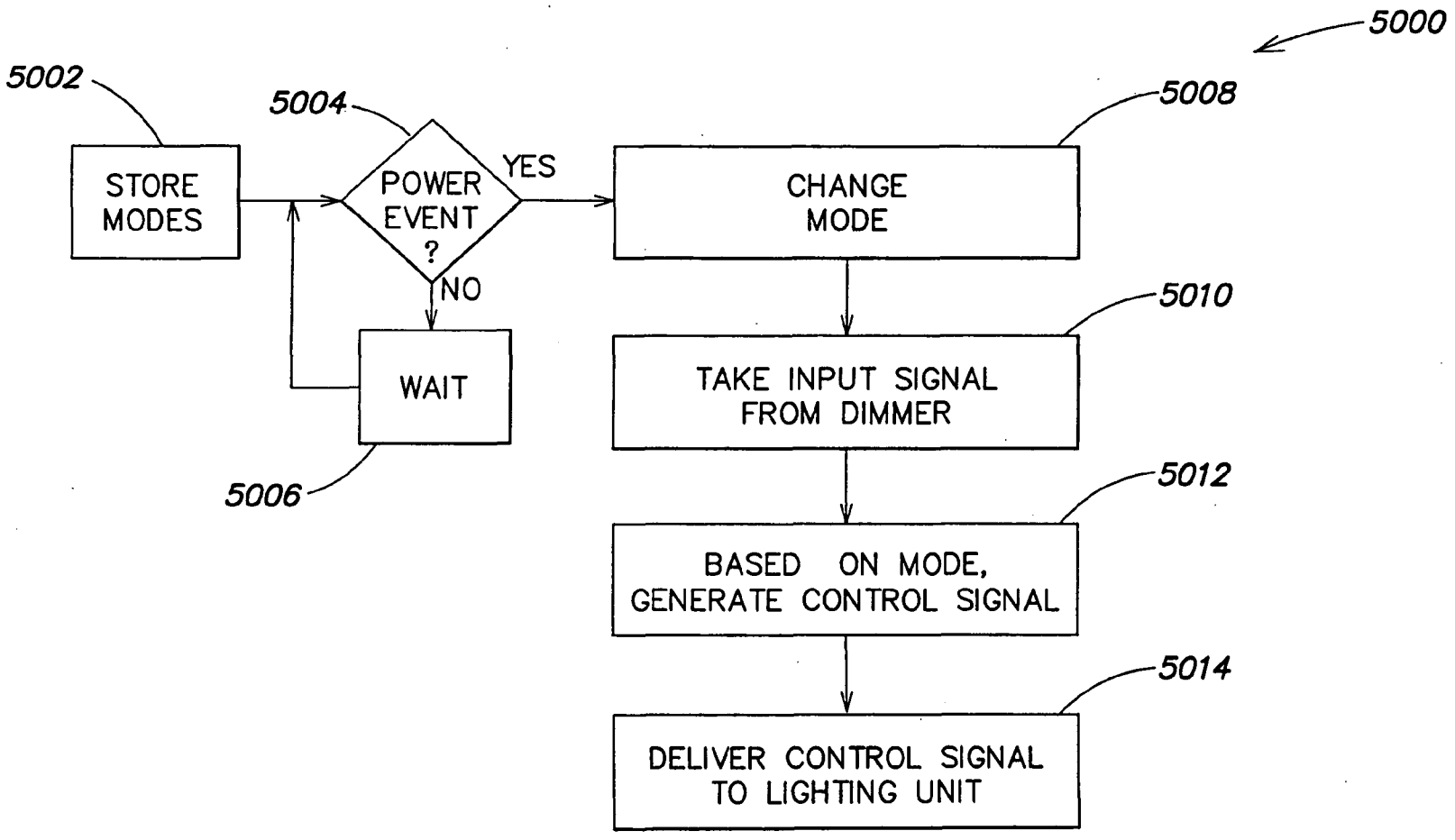
5000
5002
STORE MODES
5004
POWER EVENT ?
YES
NO
WAIT
5006
5008
CHANGE MODE
5010
TAKE INPUT SIGNAL FROM DIMMER
5012
BASED ON MODE, GENERATE CONTROL SIGNAL
5014
DELIVER CONTROL SIGNAL TO LIGHTING UNIT

FIG. 50

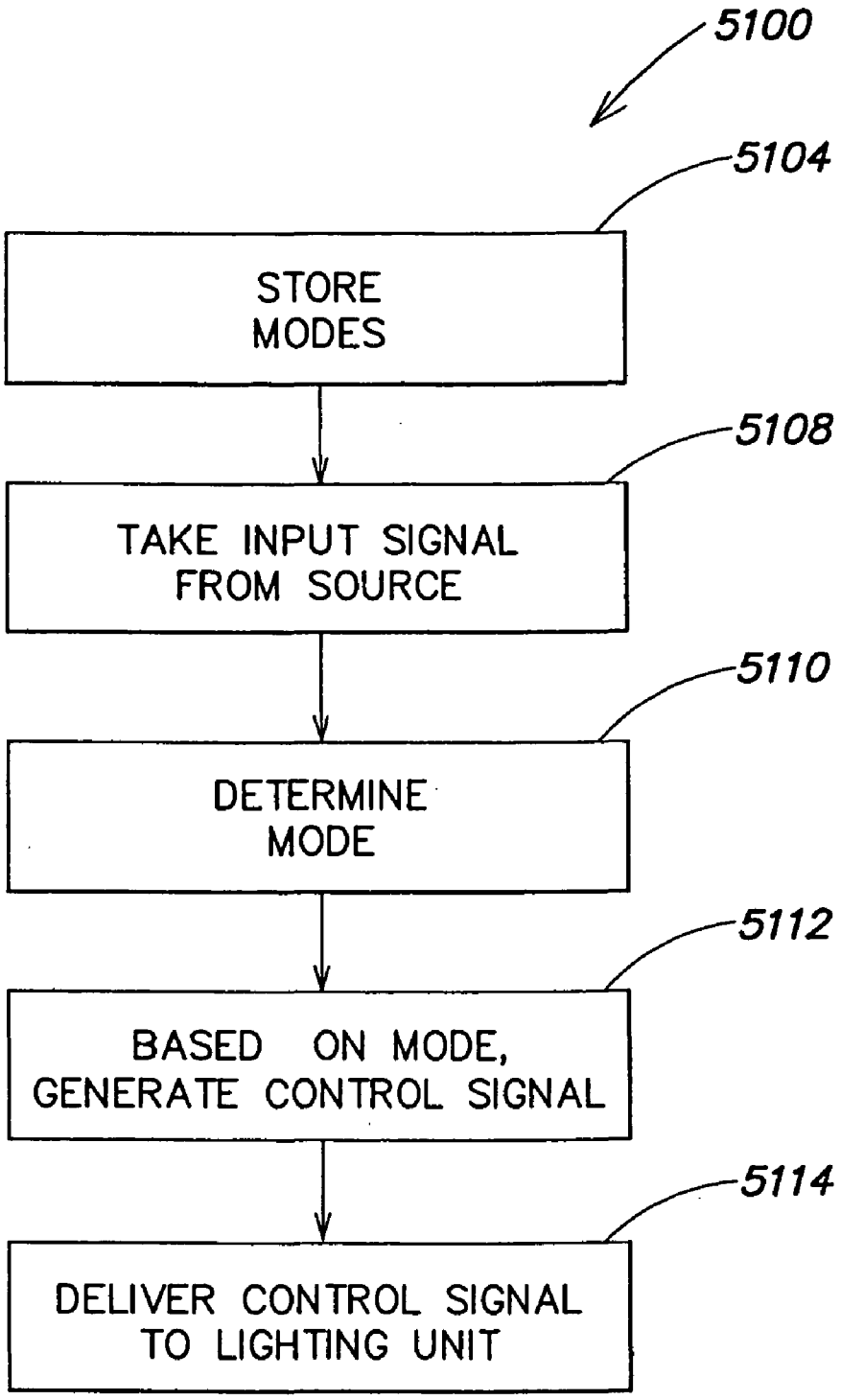
5100
5104
STORE MODES
5108
TAKE INPUT SIGNAL FROM SOURCE
5110
DETERMINE MODE
5112
BASED ON MODE, GENERATE CONTROL SIGNAL
5114
DELIVER CONTROL SIGNAL TO LIGHTING UNIT

FIG. 51

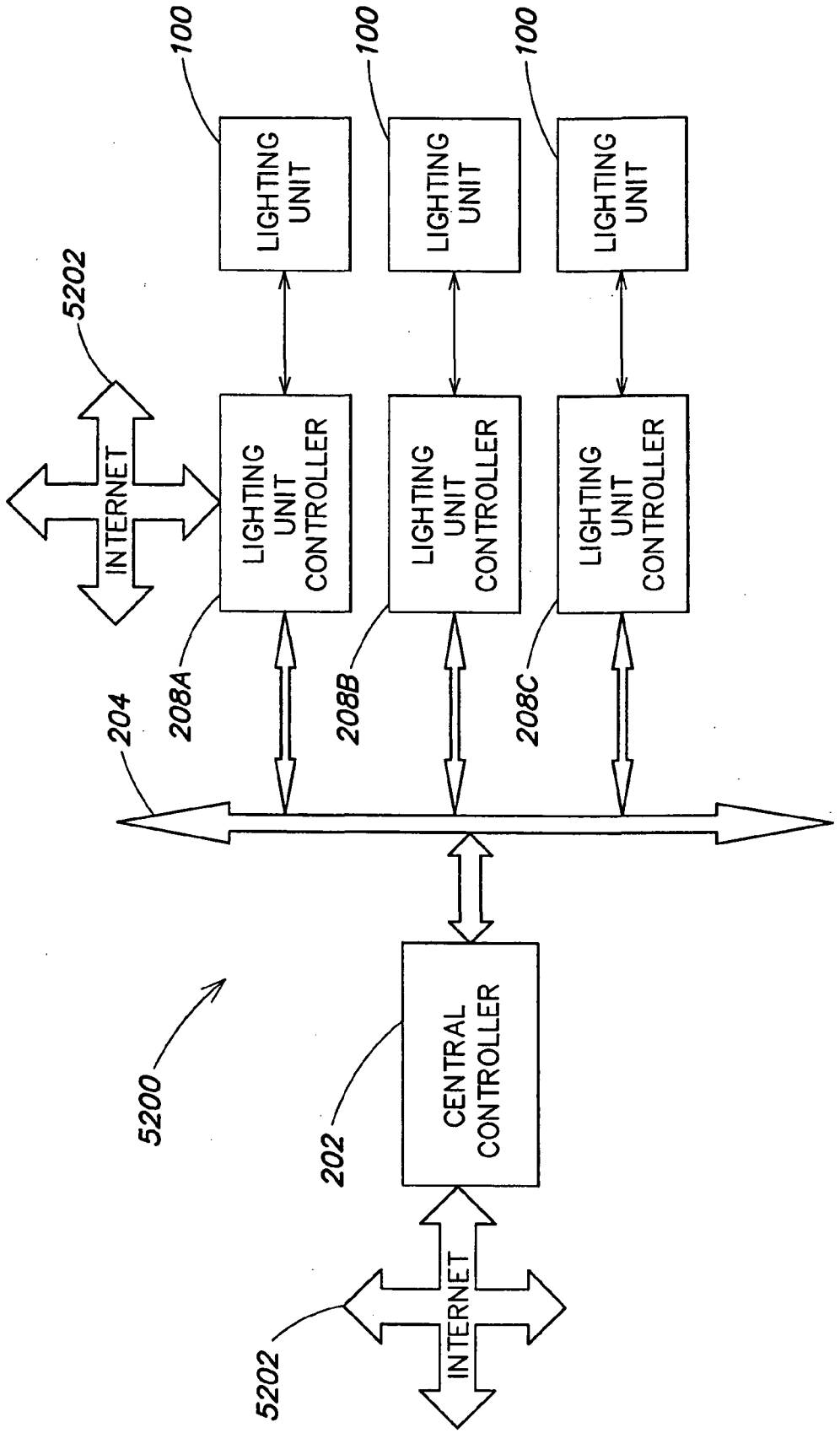
100
LIGHTING UNIT
100
LIGHTING UNIT
100
LIGHTING UNIT
5202
INTERNET
LIGHTING UNIT CONTROLLER
LIGHTING UNIT CONTROLLER
LIGHTING UNIT CONTROLLER
208A
208B
208C
204
5200
202
CENTRAL CONTROLLER
5202
INTERNET

FIG. 52

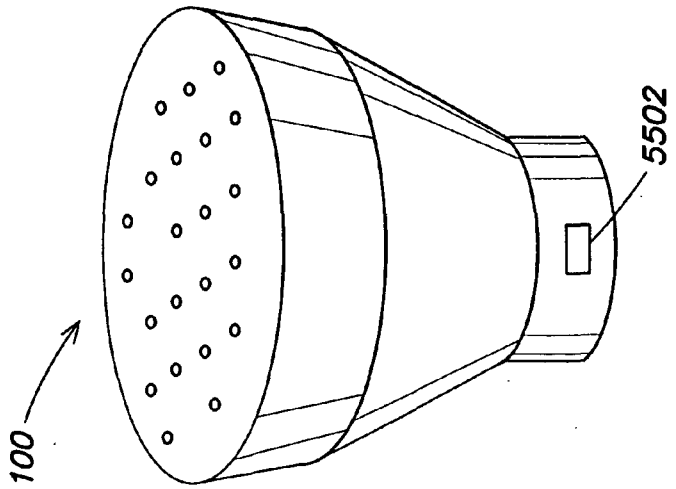

FIG. 55

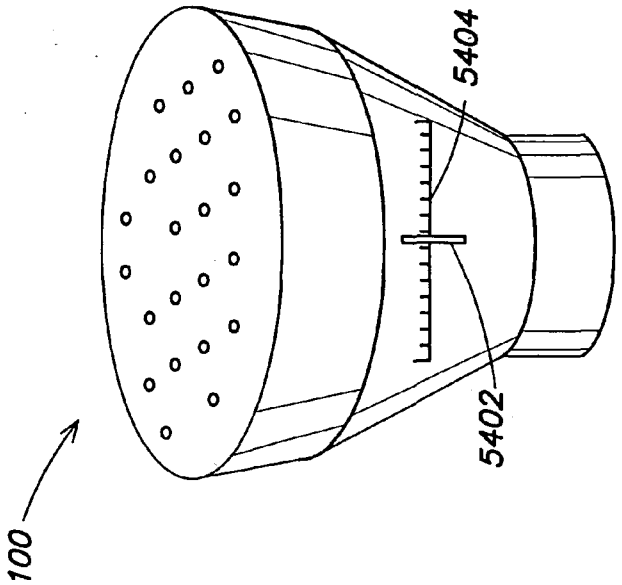

FIG. 54

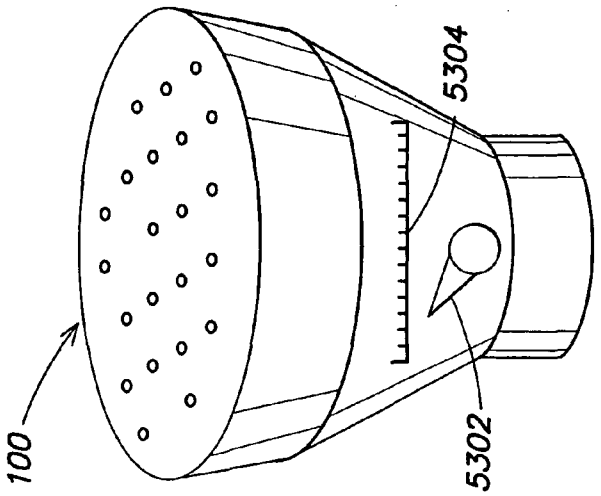

FIG. 53

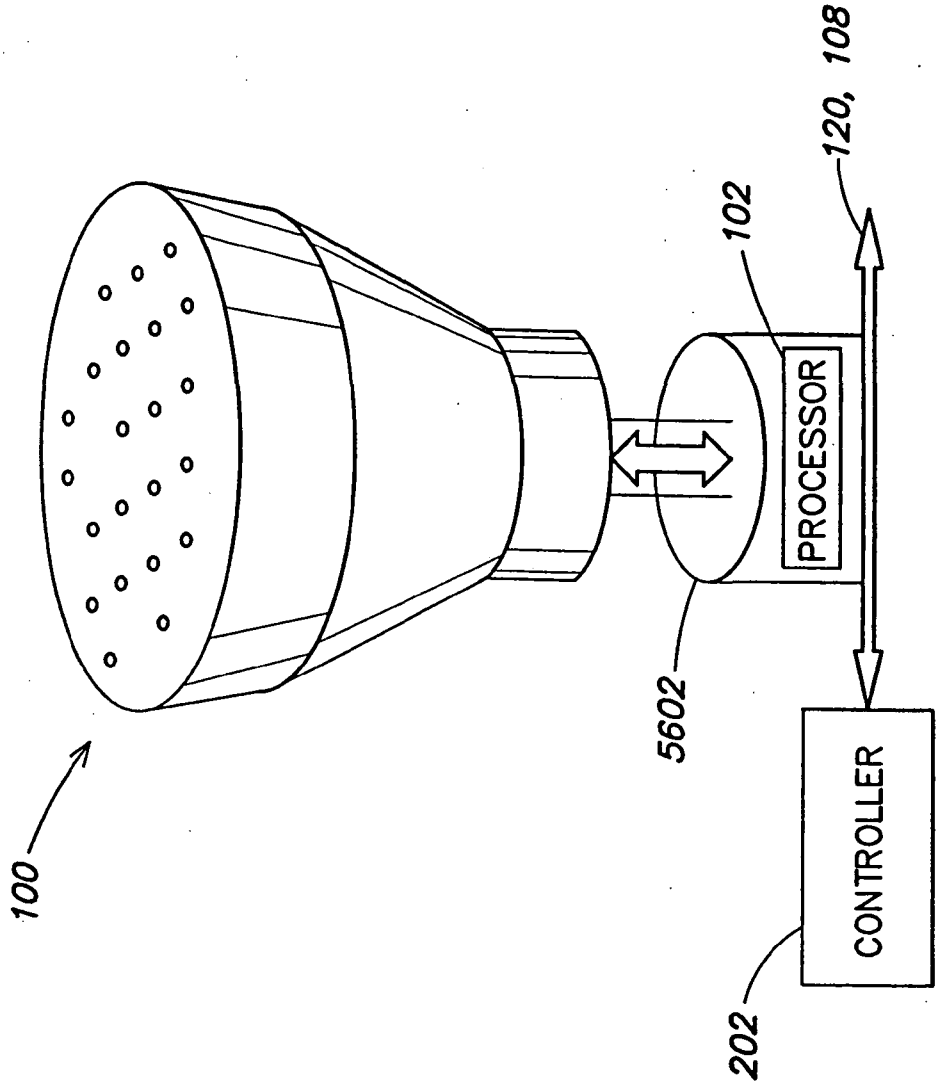

FIG. 56

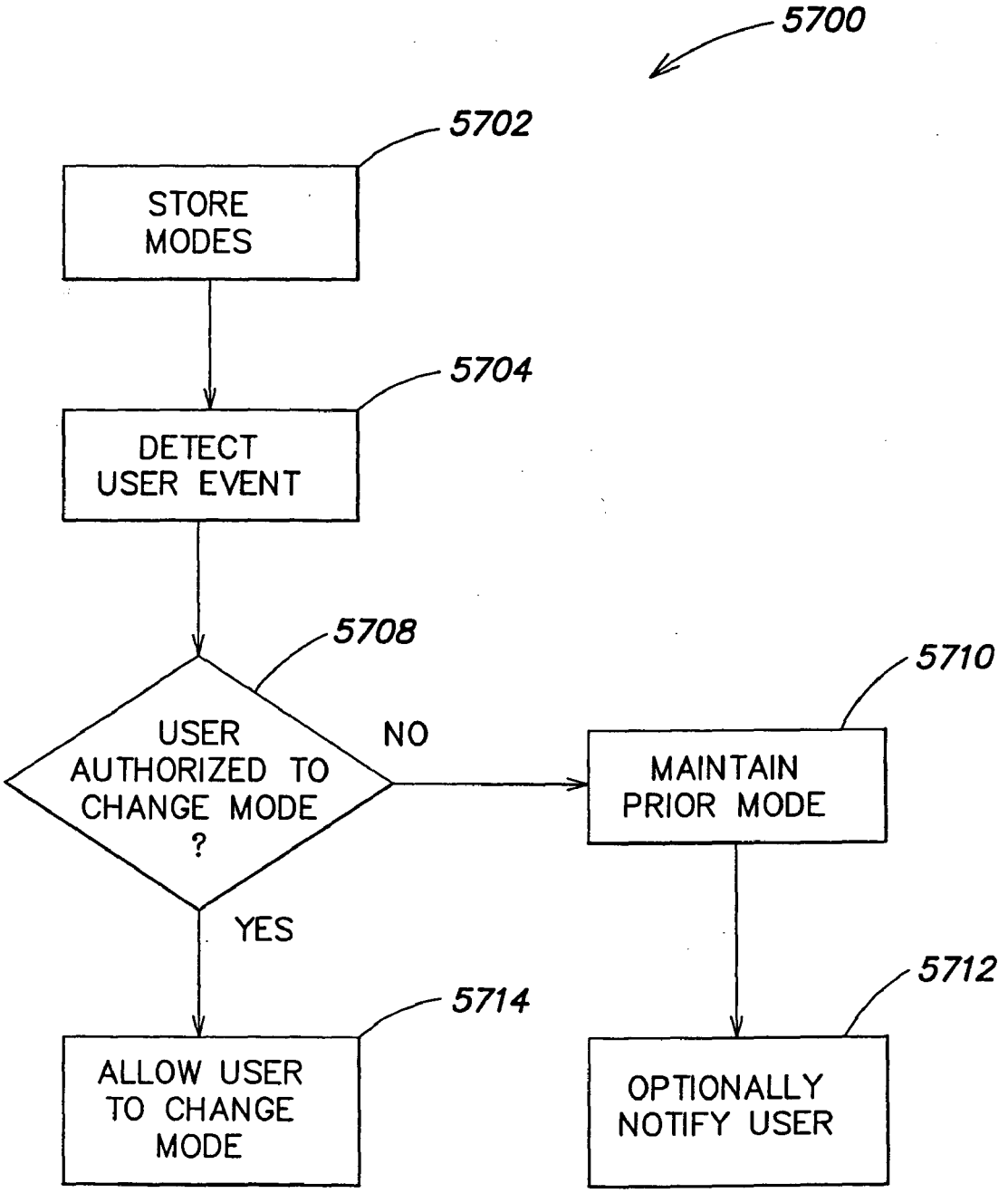
5700
5702
STORE MODES
5704
DETECT USER EVENT
5708
USER AUTHORIZED TO CHANGE MODE ?
NO
5710
MAINTAIN PRIOR MODE
YES
5714
ALLOW USER TO CHANGE MODE
5712
OPTIONALLY NOTIFY USER

FIG. 57

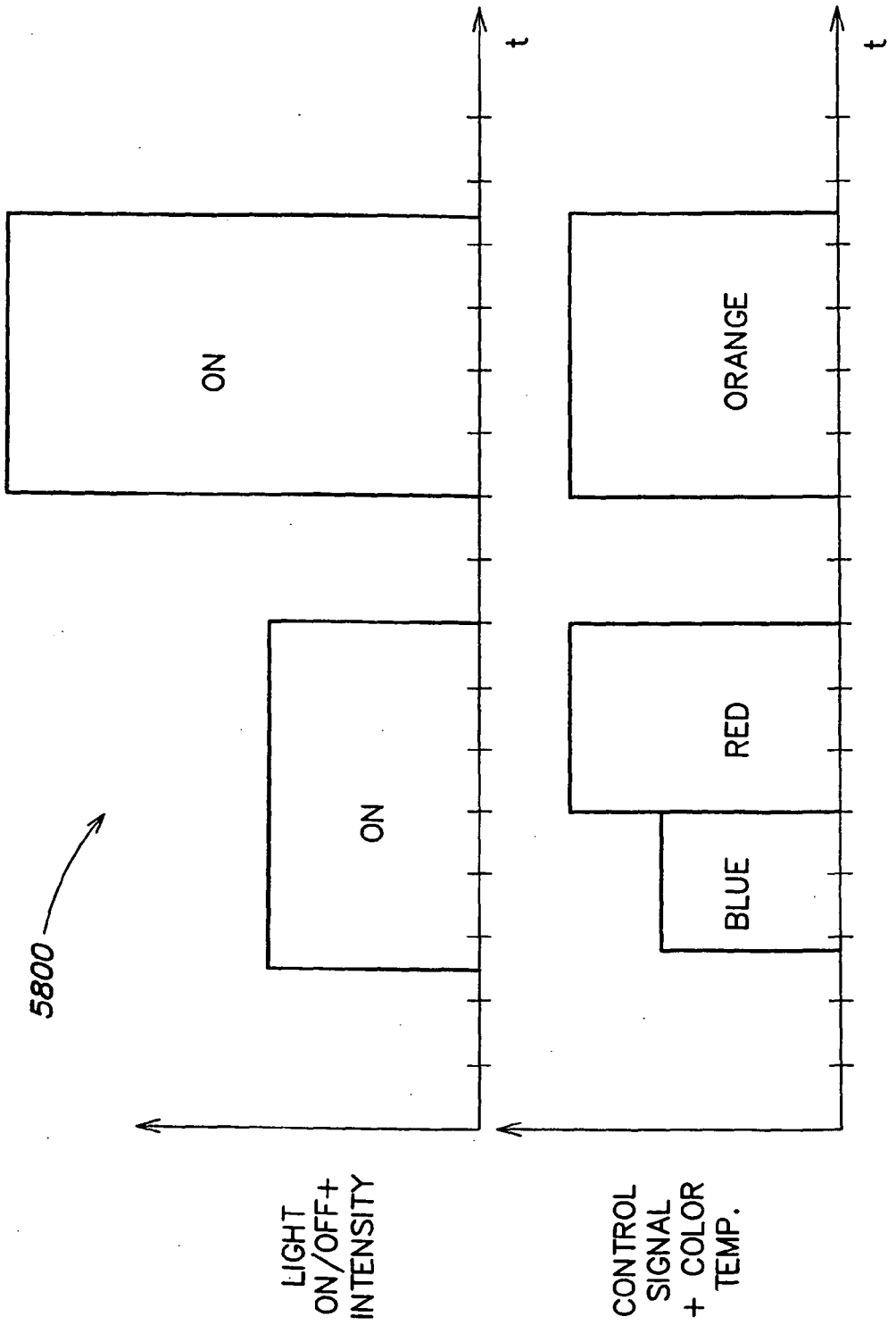
5800
ON
ON
LIGHT ON/OFF+ INTENSITY
t
ORANGE
RED
BLUE
CONTROL SIGNAL + COLOR TEMP.
t

FIG. 58

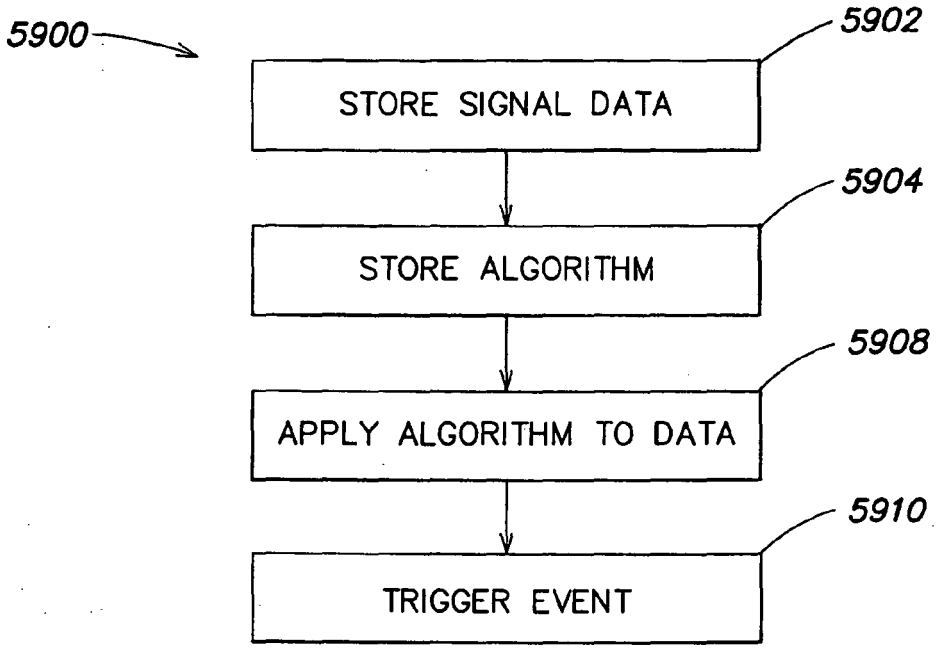
5900
5902
STORE SIGNAL DATA
5904
STORE ALGORITHM
5908
APPLY ALGORITHM TO DATA
5910
TRIGGER EVENT

FIG. 59

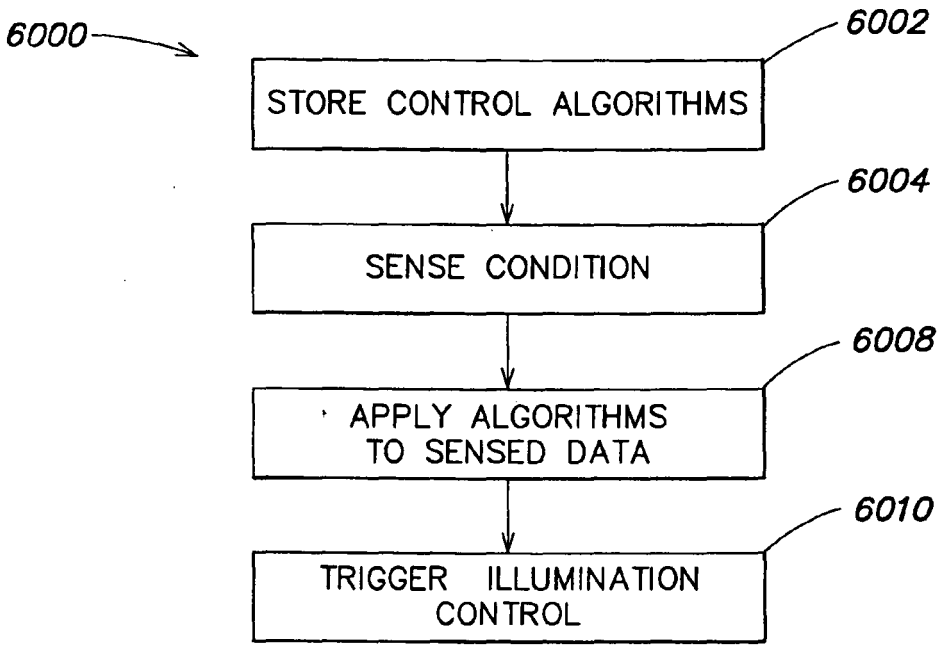
6000
6002
STORE CONTROL ALGORITHMS
6004
SENSE CONDITION
6008
APPLY ALGORITHMS TO SENSED DATA
6010
TRIGGER ILLUMINATION CONTROL

FIG. 60

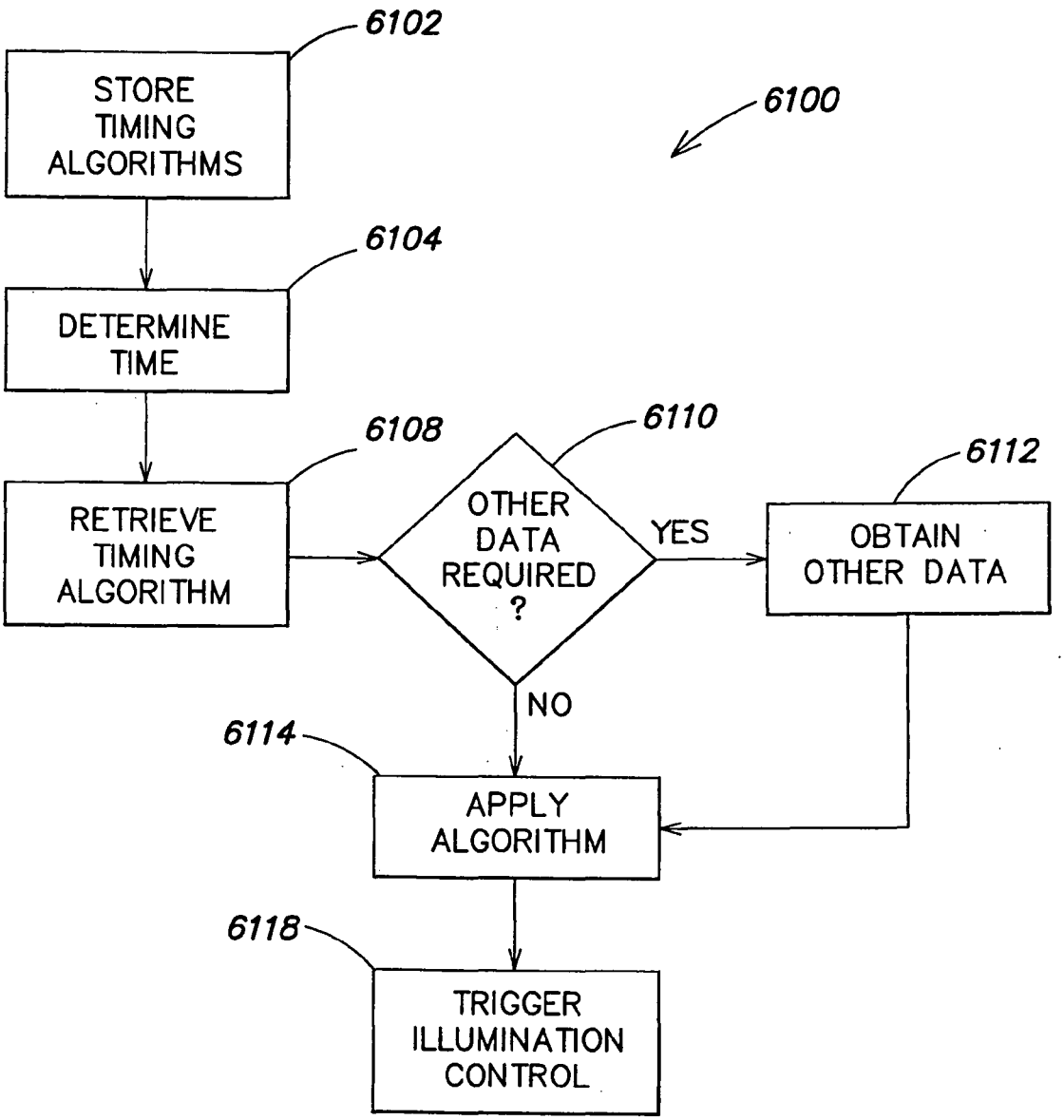
6102
STORE TIMING ALGORITHMS
6100
6104
DETERMINE TIME
6108
6110
6112
RETRIEVE TIMING ALGORITHM
OTHER DATA REQUIRED ?
YES
OBTAIN OTHER DATA
NO
6114
APPLY ALGORITHM
6118
TRIGGER ILLUMINATION CONTROL

FIG. 61

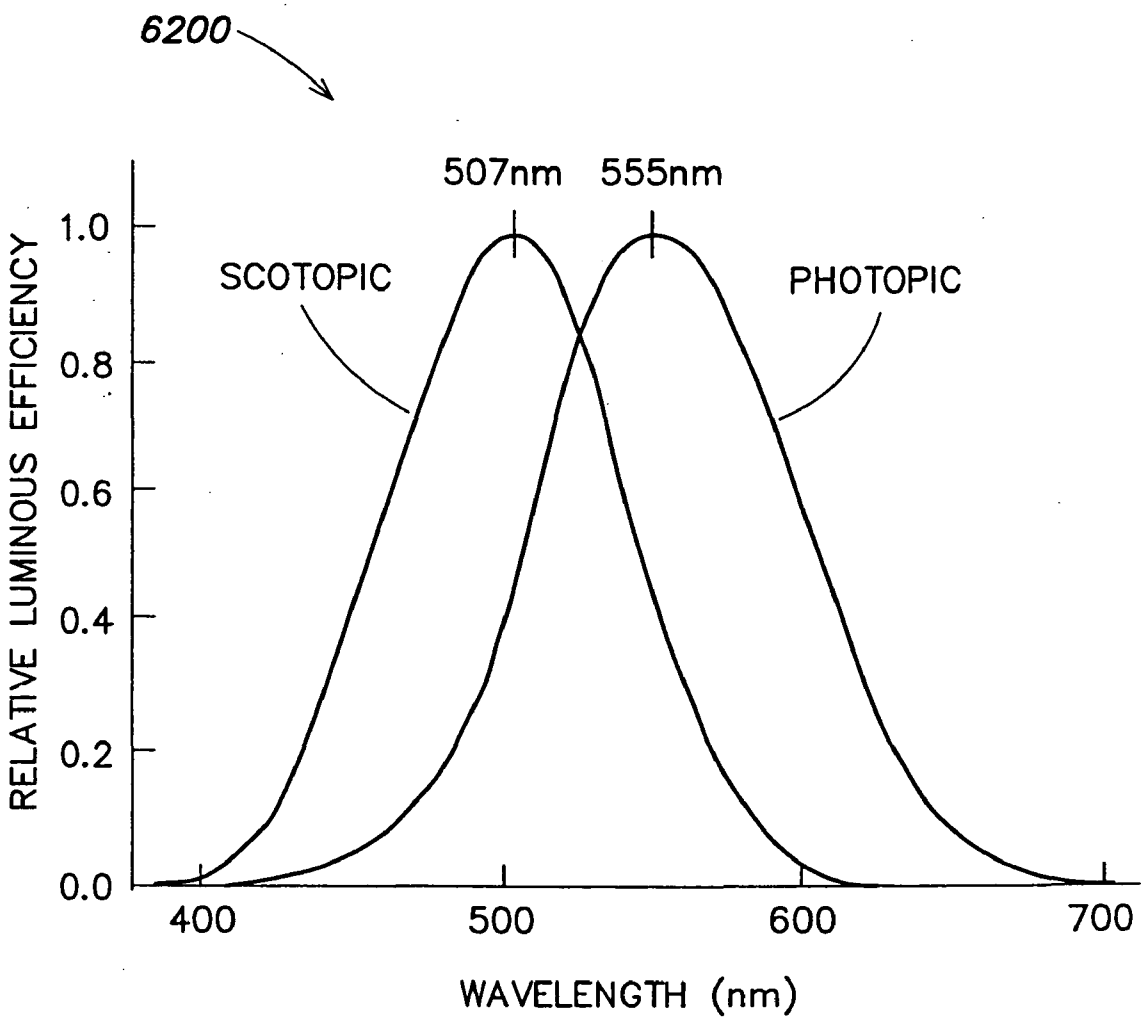
6200
507nm
555nm
SCOTOPIC
PHOTOPIC
RELATIVE LUMINOUS EFFICIENCY
1.0
0.8
0.6
0.4
0.2
0.0
400
500
600
700
WAVELENGTH (nm)

FIG. 62

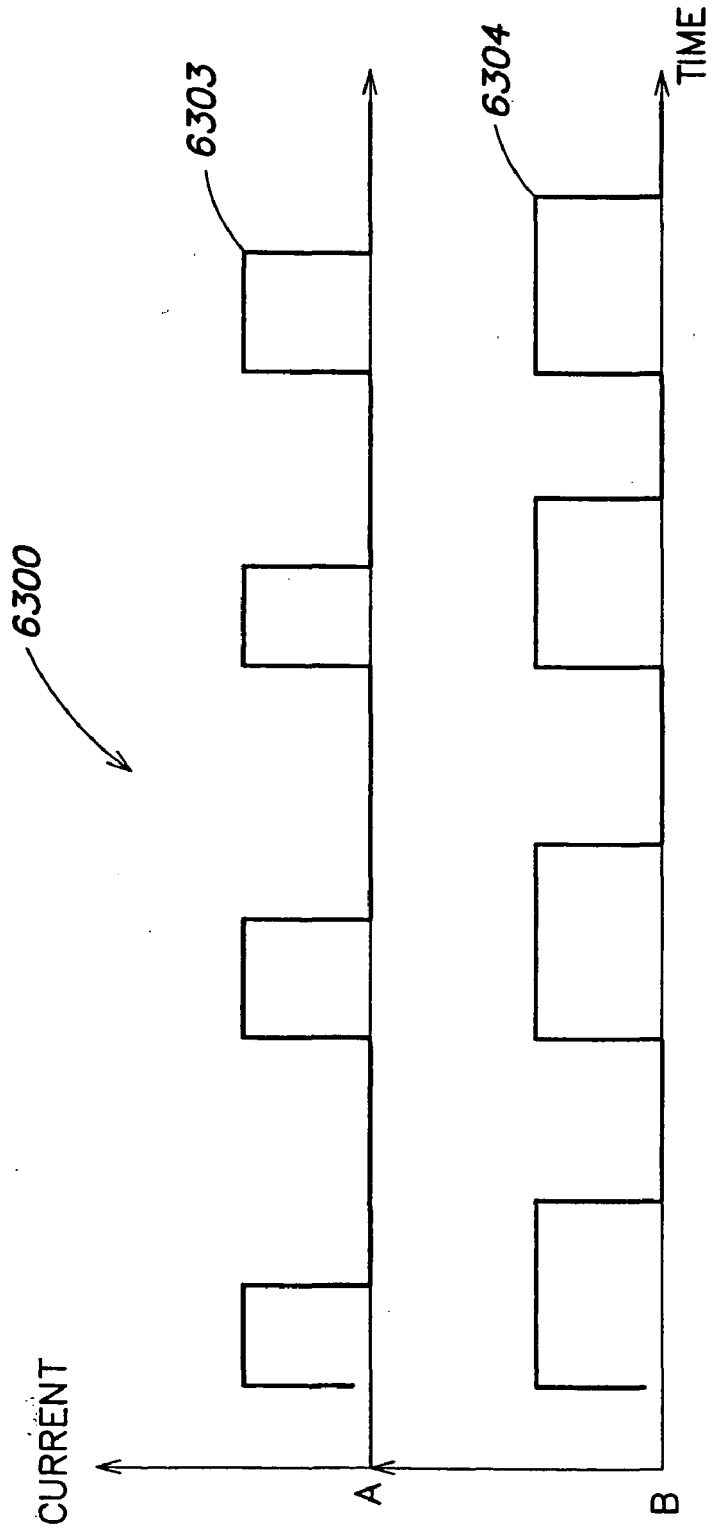

CURRENT LEVEL BETWEEN 0 AND A DESIGNATED 'ON' VALUE.

FIG. 63

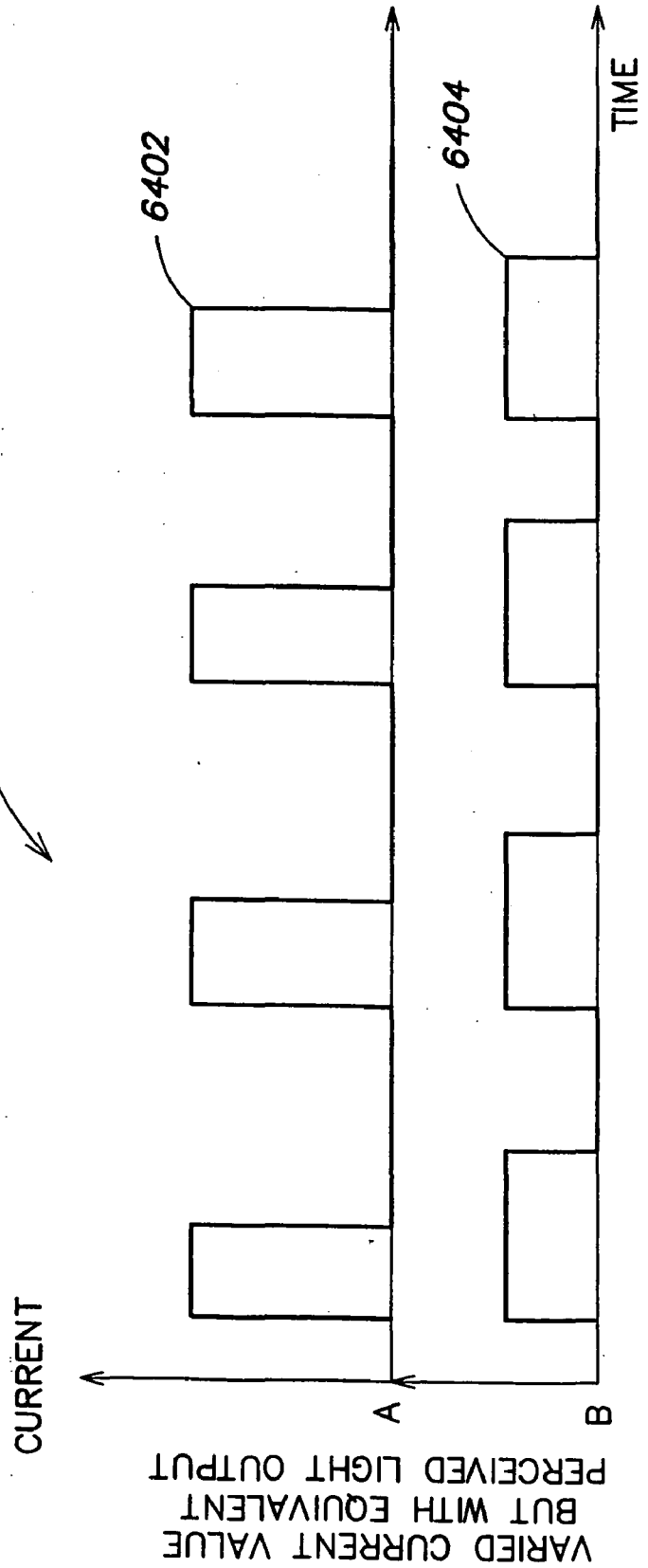
6400
6402
6404
CURRENT
TIME
A
B
VARIED CURRENT VALUE
BUT WITH EQUIVALENT
PERCEIVED LIGHT OUTPUT

FIG. 64

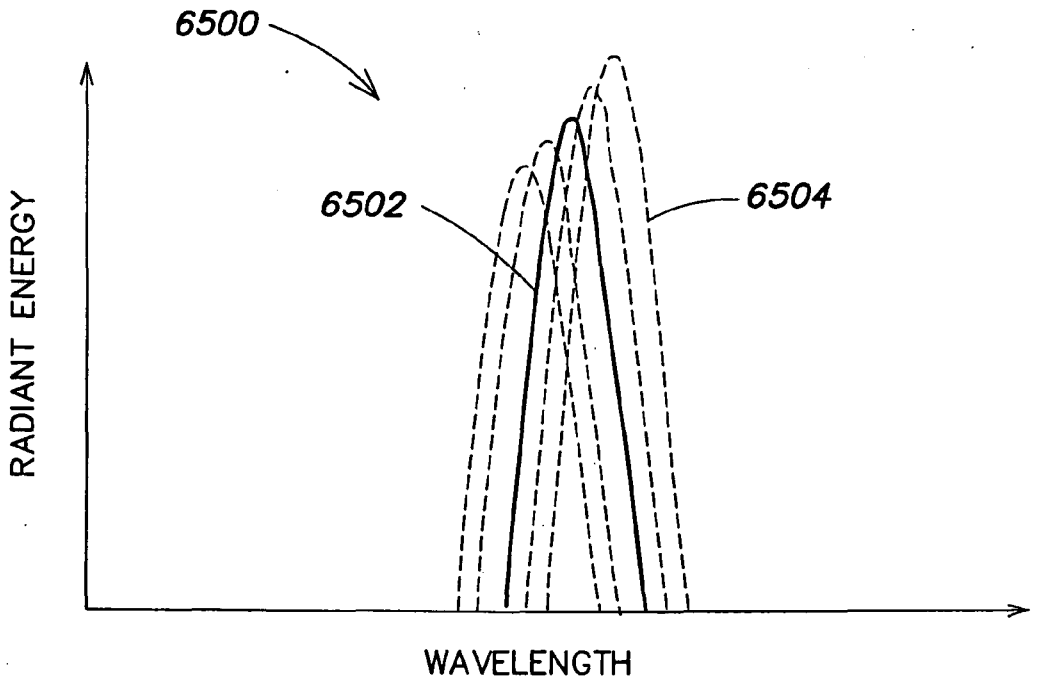
6500
6502
6504
RADIANT ENERGY
WAVELENGTH

FIG. 65

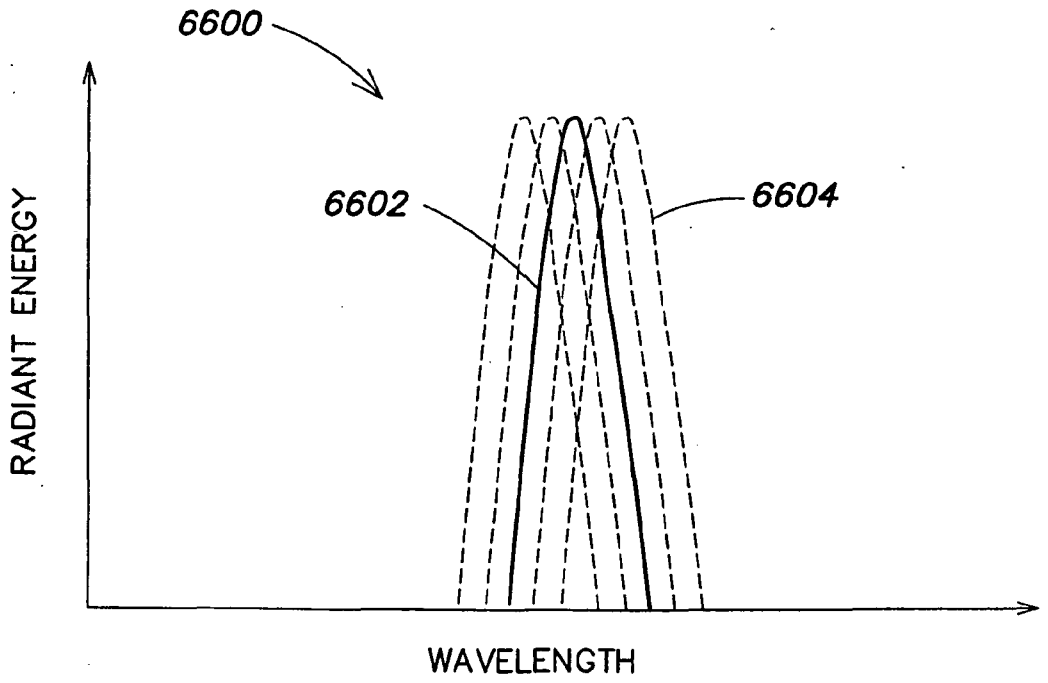
6600
6602
6604
RADIANT ENERGY
WAVELENGTH

FIG. 66

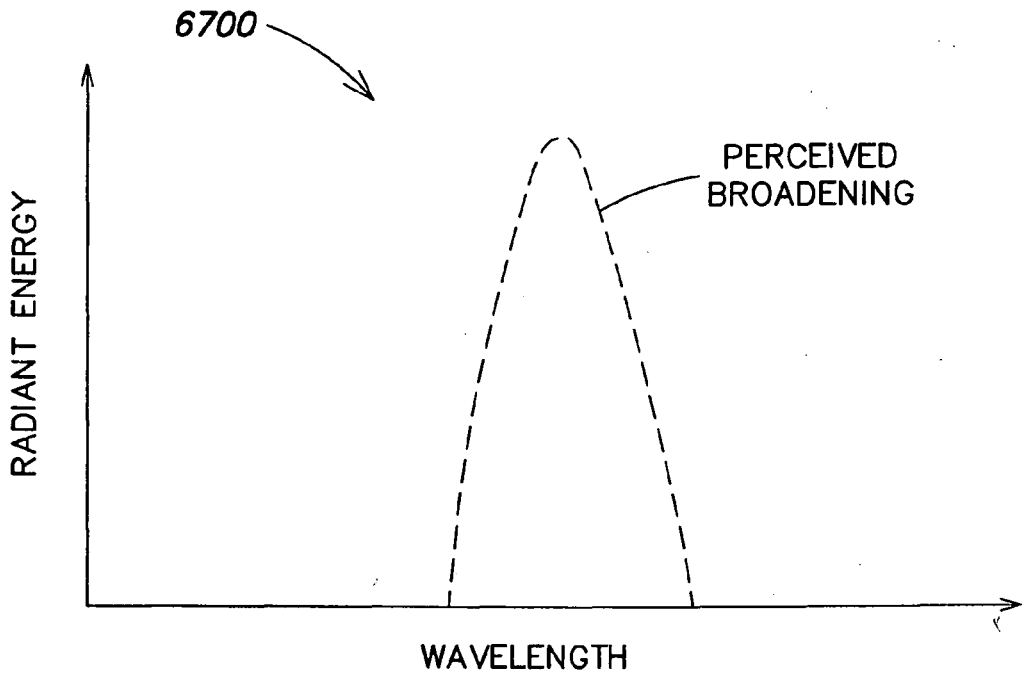
6700
PERCEIVED
BROADENING
RADIANT ENERGY
WAVELENGTH

FIG. 67

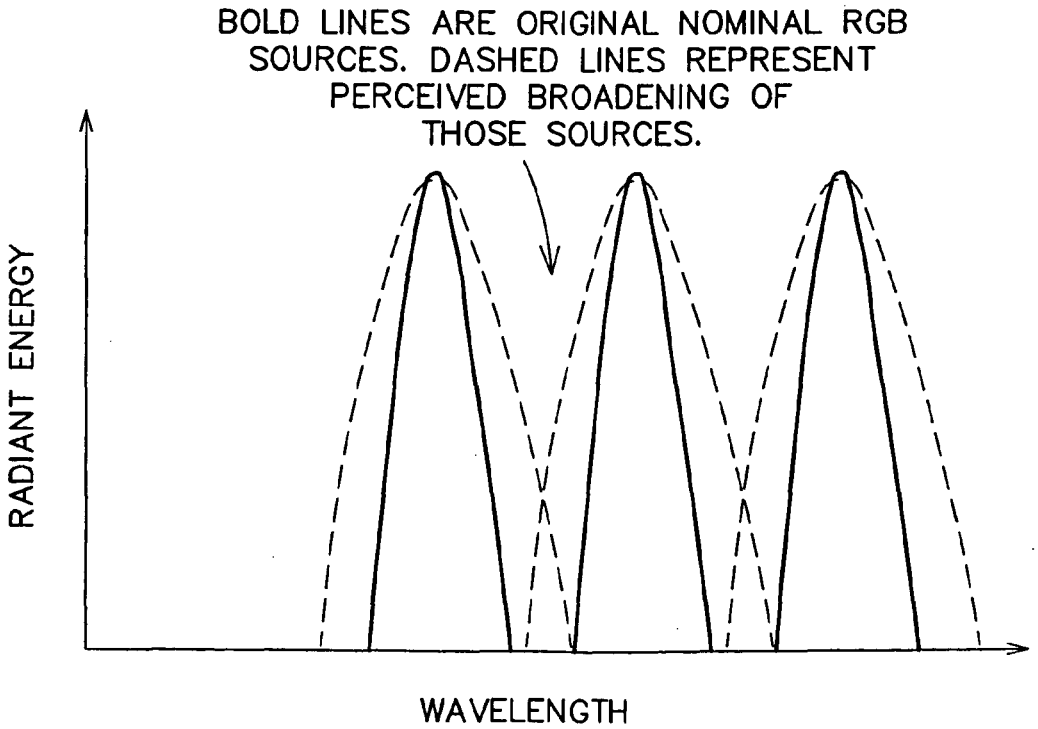
BOLD LINES ARE ORIGINAL NOMINAL RGB
SOURCES. DASHED LINES REPRESENT
PERCEIVED BROADENING OF
THOSE SOURCES.
RADIANT ENERGY
WAVELENGTH

FIG. 68

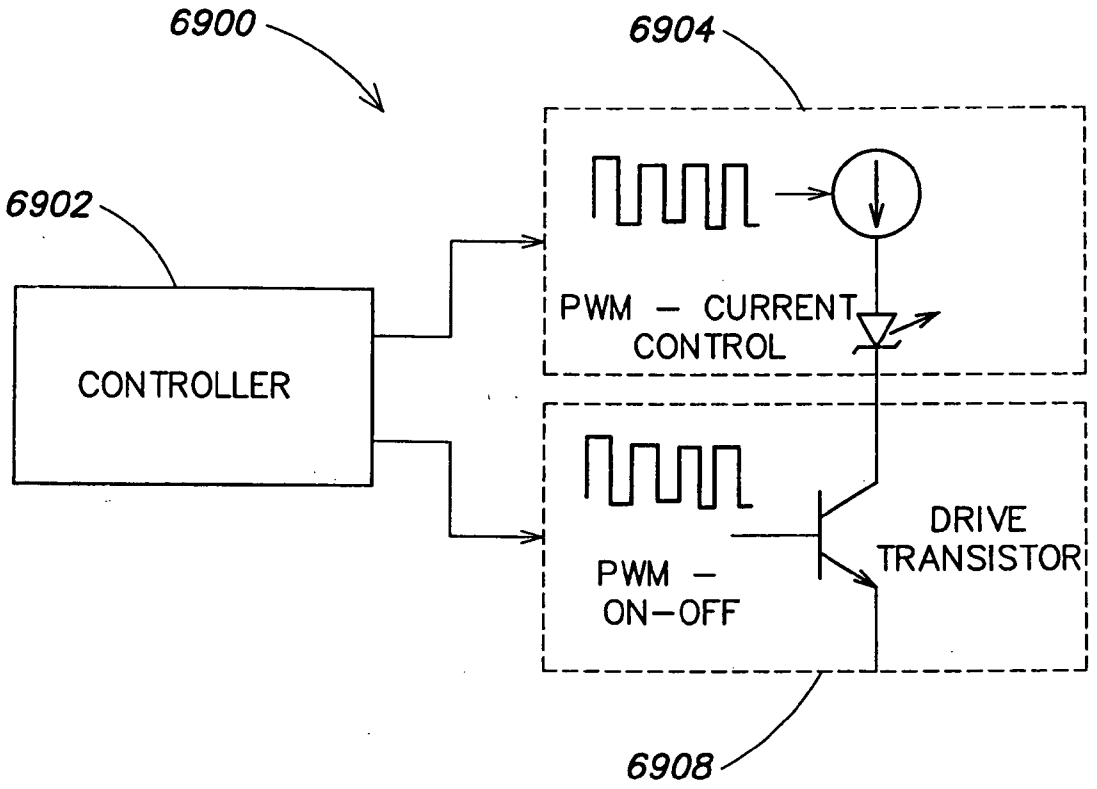
6900
6904
6902
CONTROLLER
PWM – CURRENT CONTROL
PWM – ON–OFF
DRIVE TRANSISTOR
6908

FIG. 69

CONTROLLED LIGHTING METHODS AND APPARATUS

CROSS-REFERENCES TO RELATED APPLICATIONS

[0001] This application claims the benefit under 35 U.S.C. §120 as a continuation (CON) of U.S. Non-provisional application Ser. No. 10/325,635, filed Dec. 19, 2002, entitled "Controlled Lighting Methods and Apparatus."

[0002] Ser. No. 10/325,635 in turn claims the benefit under 35 U.S.C. §19(e) of U.S. Provisional Application Ser. No. 60/341,898, filed Dec. 19, 2001, entitled "Systems and Methods for LED Lighting" and U.S. Provisional Application Ser. No. 60/407,185, filed Aug. 28, 2002, entitled "Methods and Systems for Illuminating Environments."

[0003] Ser. No. 10/325,635 also claims the benefit under 35 U.S.C. §120 as a continuation-in-part (CIP) of U.S. Non-provisional application Ser. No. 09/971,367, filed Oct. 4, 2001, entitled "Multicolored LED Lighting Method and Apparatus", now U.S. Pat. No. 6,788,011, which is a continuation of U.S. Non-provisional application Ser. No. 09/669,121, filed Sep. 25, 2000, entitled "Multicolored LED Lighting Method and Apparatus", which is a continuation of U.S. Ser. No. 09/425,770, filed Oct. 22, 1999, now Pat. No. 6,150,774, which is a continuation of U.S. Ser. No. 08/920,156, filed Aug. 26, 1997, now Pat. No. 6,016,038.

[0004] Ser. No. 10/325,635 also claims the benefit under 35 U.S.C. §120 as a continuation-in-part (CIP) of U.S. Non-provisional application Ser. No. 09/215,624, filed Dec. 17, 1998, entitled "Smart Light Bulb", which claims the benefit of the following U.S. Provisional Applications:

[0005] Ser. No. 60/071,281, filed Dec. 17, 1997, entitled "Digitally Controlled Light Emitting Diodes Systems and Methods";

[0006] Ser. No. 60/068,792, filed Dec. 24, 1997, entitled "Multi-Color Intelligent Lighting";

[0007] Ser. No. 60/078,861, filed Mar. 20, 1998, entitled "Digital Lighting Systems";

[0008] Ser. No. 60/079,285, filed Mar. 25, 1998, entitled "System and Method for Controlled Illumination"; and

[0009] Ser. No. 60/090,920, filed Jun. 26, 1998, entitled "Methods for Software Driven Generation of Multiple Simultaneous High Speed Pulse Width Modulated Signals."

[0010] Ser. No. 10/325,635 also claims the benefit under 35 U.S.C. §120 as a continuation-in-part (CIP) of the following U.S. Non-provisional Applications:

[0011] Ser. No. 09/213,607, filed Dec. 17, 1998, entitled "Systems and Methods for Sensor-Responsive Illumination";

[0012] Ser. No. 09/213,581, filed Dec. 17, 1998, entitled "Kinetic Illumination";

[0013] Ser. No. 09/213,540, filed Dec. 17, 1998, entitled "Data Delivery Track";

[0014] Ser. No. 09/333,739, filed Jun. 15, 1999, entitled "Diffuse Illumination Systems and Methods";

[0015] Ser. No. 09/815,418, filed Mar. 22, 2001, entitled "Lighting Entertainment System", which is a continuation of U.S. Ser. No. 09/213,548, filed Dec. 17, 1998, now Pat. No. 6,166,496;

[0016] Ser. No. 09/870,193, filed May 30, 2001, entitled "Methods and Apparatus for Controlling Devices in a Networked Lighting System;"

[0017] Ser. No. 09/344,699, filed Jun. 25, 1999, entitled "Method for Software Driven Generation of Multiple Simultaneous High Speed Pulse Width Modulated Signals;"

[0018] Ser. No. 09/805,368, filed Mar. 13, 2001, entitled "Light-Emitting Diode Based Products", which claims the benefit of U.S. Provisional Application Ser. No. 60/199,333, filed Apr. 24, 2000, entitled "Autonomous Color Changing Accessory" and U.S. Provisional Application Ser. No. 60/211,417, filed Jun. 14, 2000, entitled "LED-Based Consumer Products;"

[0019] Ser. No. 09/663,969, filed Sep. 19, 2000, entitled "Universal Lighting Network Methods and Systems;"

[0020] Ser. No. 09/716,819, filed Nov. 20, 2000, entitled "Systems and Methods for Generating and Modulating Illumination Conditions," which claims the benefit of U.S. Provisional Application Ser. No. 60/166,533, filed Nov. 18, 1999, entitled "Designing Lights with LED Spectrum and U.S. Provisional Application Ser. No. 60/201,140, filed May 2, 2000, entitled "Systems and Methods for Modulating Illumination Conditions;"

[0021] Ser. No. 09/675,419, filed September 29, 2000, entitled "Systems and Methods for Calibrating Light Output by Light-Emitting Diodes," which claims the benefit of U.S. Provisional Application Ser. No. 60/156,672, filed Sep. 29, 1999, entitled "Systems and Methods for Calibrating Light Output by Light Emitting Diodes;"

[0022] Ser. No. 09/870,418, filed May 30, 2001, entitled "A Method and Apparatus for Authoring and Playing Back Lighting Sequences;" and

[0023] Ser. No. 10/245,788, filed Sep. 17, 2002, entitled "Methods and Apparatus for Generating and Modulating White Light Illumination Conditions."

[0024] Ser. No. 10/325,635 also claims the benefit under 35 U.S.C. §120 as a continuation-in-part (CIP) of U.S. Non-provisional application Ser. No. 10/045,629, filed Oct. 25, 2001, entitled "Methods and Apparatus for Controlling Illumination", which in turn claims the benefit of the following U.S. Provisional Applications:

[0025] Ser. No. 60/243,250, filed Oct. 25, 2000, entitled "Illumination of Liquids;"

[0026] Ser. No. 60/296,377, filed Jun. 6, 2001, entitled "Systems and Methods for Controlling Lighting Systems;"

[0027] Ser. No. 60/297,828, filed Jun. 13, 2001, entitled "Systems and Methods for Controlling Lighting Systems;" and

[0028] Ser. No. 60/290,101, filed May 10, 2001, entitled "Lighting Synchronization Without a Network;"

[0029] Ser. No. 10/325,635 also claims the benefit under 35 U.S.C. §120 as a continuation-in-part (CIP) of U.S. Non-provisional application Ser. No. 10/245,786, filed Sep. 17, 2002, entitled "Light Emitting Diode Based Products", which in turn claims the benefit of the following U.S. Provisional Applications:

[0030] Ser. No. 60/322,765, filed Sep. 17, 2001, entitled "Light Emitting Diode Illumination Systems and Methods;"

[0031] Ser. No. 60/329,202, filed Oct. 12, 2001, entitled "Light Emitting Diode Illumination Systems and Methods;"

[0032] Ser. No. 60/341,476, filed Oct. 30, 2001, entitled "Systems and Methods for LED Lighting;"

[0033] Ser. No. 60/335,679, filed Oct. 23, 2001, entitled "Systems and Methods for Programmed LED Devices;" and

[0034] Ser. No. 60/353,569, filed Feb. 1, 2002, entitled "LED Systems and Methods."

[0035] Each of the foregoing applications is hereby incorporated herein by reference.

BACKGROUND

[0036] Methods and systems for providing color-controlled illumination are known to those of skill in the art, including those identified in patents and patent applications incorporated by reference herein. Such methods and systems can benefit from improved control over illumination, including control enabled by different combinations of light sources, different control protocols, optical facilities, software programs, lighting system configurations, and other improvements.

SUMMARY

[0037] Provided herein are methods and systems for providing controlled lighting, including methods and systems for providing both white and non-white colored lighting, including color temperature controlled lighting.

[0038] Methods and systems disclosed herein include optical facilities for modifying light from a lighting unit, such as an LED-based lighting unit, including variable optical facilities and fixed optical facilities.

[0039] Also provided are methods and systems for using multi-color lighting units in a variety of commercial applications.

[0040] Also provided are methods and systems for lighting control, including methods to assist lighting designers and installers to improve the quality of lighting in environments.

[0041] Also provided are intelligent dimmers, switches, sockets and fixtures, as well as facilities for programming and using them.

[0042] Also provided are various sensor-feedback applications of lighting technology, including sensor-feedback involving light sensors and forward voltage sensors. Also provided are lighting methods and systems that operate on time-based parameters.

[0043] Methods and systems disclosed herein include methods and systems for a lighting system that includes a plurality of LEDs selected from the group consisting of red, green, blue, amber, white, orange and UV LEDs, a controller for controlling the color of light coming from the LEDs, a sensor for sensing at least one of the color and the color temperature of the light coming from the LEDs and a feedback loop for adjusting the color of light coming from the LEDs based on input from the sensor.

[0044] Methods and systems disclosed herein include a lighting system that includes a plurality of LEDs selected from the group consisting of red, green, blue, amber, white, orange and UV LEDs, a controller for controlling the color of light coming from the LEDs and a variable optical facility for modifying the light coming from the LEDs in response to actuation by a user.

[0045] Methods and systems disclosed herein include a lighting system that includes a plurality of LEDs selected from the group consisting of red, green, blue, amber, white, orange and UV LEDs, a controller for controlling the color of light coming from the LEDs, an optical facility for modifying the light coming from the LEDs and an actuator for actuating a change in the optical facility.

[0046] Methods and systems further include a method of providing illumination, including providing a plurality of LEDs selected from the group consisting of red, green, blue, amber, white, orange and UV LEDs, controlling the color of light coming from the LEDs, sensing at least one of the color and the color temperature of the light coming from the LEDs and using a feedback loop to adjusting the color of light coming from the LEDs based on input from the sensor.

[0047] Methods and systems also includes a method of providing illumination that includes providing light from a plurality of LEDs selected from the group consisting of red, green, blue, amber, white, orange and UV LEDs, controlling at least one of the color and color temperature of light coming from the LEDs, providing an optical facility for modifying the light coming from the LEDs and actuating a change in the optical facility to change the modification of the light coming from the LEDs.

[0048] The optical facility can be a fluid-filled lens, a MEMs device, a digital mirror or other optical facility.

[0049] Methods and systems can also include a method of lighting a motion picture environment, including providing a camera, providing a processor to control the camera, providing a lighting system, the lighting system including a plurality of LEDs selected from the group consisting of red, green, blue, amber, white, orange and UV LEDs and using the processor to simultaneously control the camera and the lighting system.

[0050] Methods and systems include a method of providing control to a lighting system, including providing a lighting control facility for a lighting system that includes a processor and a plurality of LEDs, and providing a facility for requiring user authorization in order to allow a user to change the lighting condition generated by the lighting system.

[0051] Methods and systems include a method of providing a settable light, including providing a lighting unit, the lighting unit including a plurality of LEDs selected from the group consisting of red, green, blue, amber, white, orange and UV LEDs, providing a scale, the scale representing at least one of a plurality of color temperatures, a plurality of colors, and a plurality of intensities of light output from the lighting unit, and providing an interface, the interface allowing the user to set the light output from the lighting unit by setting the interface on a setting of the scale corresponding to that light output.

[0052] Methods and systems also include a configuring the scale to show a range of color temperatures of white light.

[0053] Methods and systems also include a method of providing lighting control, including providing a socket for a lighting unit, the socket including a processor and memory for storing and processing lighting control signals for a lighting unit that is adapted to be placed in the socket. Such methods and systems also include a method wherein the socket further comprises a communications facility for receiving a lighting control signal from an external signal source.

[0054] As used herein for purposes of the present disclosure, the term "LED" should be understood to include any light emitting diode or other type of carrier injection/junction-based system that is capable of generating radiation in response to an electric signal. Thus, the term LED includes, but is not limited to, various semiconductor-based structures that emit light in response to current, light emitting polymers, light-emitting strips, electro-luminescent strips, and the like.

[0055] In particular, the term LED refers to light emitting diodes of all types (including semi-conductor and organic light emitting diodes) that may be configured to generate radiation in one or more of the infrared spectrum, ultraviolet spectrum, and various portions of the visible spectrum (generally including radiation wavelengths from approximately 400 nanometers to approximately 700 nanometers). Some examples of LEDs include, but are not limited to, various types of infrared LEDs, ultraviolet LEDs, red LEDs, blue LEDs, green LEDs, yellow LEDs, amber LEDs, orange LEDs, and white LEDs (discussed further below). It also should be appreciated that LEDs may be configured to generate radiation having various bandwidths for a given spectrum (e.g., narrow bandwidth, broad bandwidth).

[0056] For example, one implementation of an LED configured to generate essentially white light (e.g., a white LED) may include a number of dies which respectively emit different spectrums of luminescence that, in combination, mix to form essentially white light. In another implementation, a white light LED may be associated with a phosphor material that converts luminescence having a first spectrum to a different second spectrum. In one example of this implementation, luminescence having a relatively short wavelength and narrow bandwidth spectrum "pumps" the phosphor material, which in turn radiates longer wavelength radiation having a somewhat broader spectrum.

[0057] It should also be understood that the term LED does not limit the physical and/or electrical package type of an LED. For example, as discussed above, an LED may refer to a single light emitting device having multiple dies that are configured to respectively emit different spectrums of radiation (e.g., that may or may not be individually controllable). Also, an LED may be associated with a phosphor that is considered as an integral part of the LED (e.g., some types of white LEDs). In general, the term LED may refer to packaged LEDs, non-packaged LEDs, surface mount LEDs, chip-on-board LEDs, radial package LEDs, power package LEDs, LEDs including some type of encasement and/or optical element (e.g., a diffusing lens), etc.

[0058] The term "light source" should be understood to refer to any one or more of a variety of radiation sources, including, but not limited to, LED-based sources as defined above, incandescent sources (e.g., filament lamps, halogen lamps), fluorescent sources, phosphorescent sources, high-intensity discharge sources (e.g., sodium vapor, mercury vapor, and metal halide lamps), lasers, other types of luminescent sources, electro-luminescent sources, pyro-luminescent sources (e.g., flames), candle-luminescent sources (e.g., gas mantles, carbon arc radiation sources), photo-luminescent sources (e.g., gaseous discharge sources), cathode luminescent sources using electronic satiation, galvano-luminescent sources, crystallo-luminescent sources, kine-luminescent sources, thermo-luminescent sources, triboluminescent sources, sonoluminescent sources, radioluminescent sources, and luminescent polymers.

[0059] A given light source may be configured to generate electromagnetic radiation within the visible spectrum, outside the visible spectrum, or a combination of both. Hence, the terms "light" and "radiation" are used interchangeably herein. Additionally, a light source may include as an integral component one or more filters (e.g., color filters), lenses, or other optical components. Also, it should be understood that light sources may be configured for a variety of applications, including, but not limited to, indication and/or illumination. An "illumination source" is a light source that is particularly configured to generate radiation having a sufficient intensity to effectively illuminate an interior or exterior space.

[0060] The term "spectrum" should be understood to refer to any one or more frequencies (or wavelengths) of radiation produced by one or more light sources. Accordingly, the term "spectrum" refers to frequencies (or wavelengths) not only in the visible range, but also frequencies (or wavelengths) in the infrared, ultraviolet, and other areas of the overall electromagnetic spectrum. Also, a given spectrum may have a relatively narrow bandwidth (essentially few frequency or wavelength components) or a relatively wide bandwidth (several frequency or wavelength components having various relative strengths). It should also be appreciated that a given spectrum may be the result of a mixing of two or more other spectrums (e.g., mixing radiation respectively emitted from multiple light sources).

[0061] For purposes of this disclosure, the term "color" is used interchangeably with the term "spectrum." However, the term "color" generally is used to refer primarily to a property of radiation that is perceivable by an observer (although this usage is not intended to limit the scope of this term). Accordingly, the terms "different colors" implicitly refer to different spectrums having different wavelength components and/or bandwidths. It also should be appreciated that the term "color" may be used in connection with both white and non-white light.

[0062] The term "color temperature" generally is used herein in connection with white light, although this usage is not intended to limit the scope of this term. Color temperature essentially refers to a particular color content or shade (e.g., reddish, bluish) of white light. The color temperature of a given radiation sample conventionally is characterized according to the temperature in degrees Kelvin (K) of a black body radiator that radiates essentially the same spectrum as the radiation sample in question. The color temperature of white light generally falls within a range of from approximately 700 degrees K (generally considered the first visible to the human eye) to over 10,000 degrees K.

[0063] Lower color temperatures generally indicate white light having a more significant red component or a "warmer feel," while higher color temperatures generally indicate white light having a more significant blue component or a "cooler feel." By way of example, a wood burning fire has a color temperature of approximately 1,800 degrees K, a conventional incandescent bulb has a color temperature of approximately 2848 degrees K, early morning daylight has a color temperature of approximately 3,000 degrees K, and overcast midday skies have a color temperature of approximately 10,000 degrees K. A color image viewed under white light having a color temperature of approximately 3,000 degree K has a relatively reddish tone, whereas the same color image viewed under white light having a color temperature of approximately 10,000 degrees K has a relatively bluish tone.

[0064] The terms "lighting unit" and "lighting fixture" are used interchangeably herein to refer to an apparatus including one or more light sources of same or different types. A given lighting unit may have any one of a variety of mounting arrangements for the light source(s), enclosure/housing arrangements and shapes, and/or electrical and mechanical connection configurations. Additionally, a given lighting unit optionally may be associated with (e.g., include, be coupled to and/or packaged together with) various other components (e.g., control circuitry) relating to the operation of the light source(s). An "LED-based lighting unit" refers to a lighting unit that includes one or more LED-based light sources as discussed above, alone or in combination with other non LED-based light sources.

[0065] The terms "processor" or "controller" are used herein interchangeably to describe various apparatus relating to the operation of one or more light sources. A processor or controller can be implemented in numerous ways, such as with dedicated hardware, using one or more microprocessors that are programmed using software (e.g., microcode or firmware) to perform the various functions discussed herein, or as a combination of dedicated hardware to perform some functions and programmed microprocessors and associated circuitry to perform other functions.

[0066] In various implementations, a processor or controller may be associated with one or more storage media (generically referred to herein as "memory," e.g., volatile and non-volatile computer memory such as RAM, PROM, EPROM, and EEPROM, floppy disks, compact disks, optical disks, magnetic tape, etc.). In some implementations, the storage media may be encoded with one or more programs that, when executed on one or more processors and/or controllers, perform at least some of the functions discussed herein. Various storage media may be fixed within a processor or controller or may be transportable, such that the one or more programs stored thereon can be loaded into a processor or controller so as to implement various aspects of the present invention discussed herein. The terms "program" or "computer program" are used herein in a generic sense to refer to any type of computer code (e.g., software or microcode) that can be employed to program one or more processors or controllers, including by retrieval of stored sequences of instructions.

[0067] The term "addressable" is used herein to refer to a device (e.g., a light source in general, a lighting unit or fixture, a controller or processor associated with one or more light sources or lighting units, other non-lighting related devices, etc.) that is configured to receive information (e.g., data) intended for multiple devices, including itself, and to selectively respond to particular information intended for it. The term "addressable" often is used in connection with a networked environment (or a "network," discussed further below), in which multiple devices are coupled together via some communications medium or media.

[0068] In one implementation, one or more devices coupled to a network may serve as a controller for one or more other devices coupled to the network (e.g., in a master/slave relationship). In another implementation, a networked environment may include one or more dedicated controllers that are configured to control one or more of the devices coupled to the network. Generally, multiple devices coupled to the network each may have access to data that is present on the communications medium or media; however, a given device may be "addressable" in that it is configured to selectively exchange data with (i.e., receive data from and/or transmit data to) the network, based, for example, on one or more particular identifiers (e.g., "addresses") assigned to it.

[0069] The term "network" as used herein refers to any interconnection of two or more devices (including controllers or processors) that facilitates the transport of information (e.g. for device control, data storage, data exchange, etc.) between any two or more devices and/or among multiple devices coupled to the network. As should be readily appreciated, various implementations of networks suitable for interconnecting multiple devices may include any of a variety of network topologies and employ any of a variety of communication protocols. Additionally, in various networks according to the present invention, any one connection between two devices may represent a dedicated connection between the two systems, or alternatively a non-dedicated connection. In addition to carrying information intended for the two devices, such a non-dedicated connection may carry information not necessarily intended for either of the two devices (e.g., an open network connection). Furthermore, it should be readily appreciated that various networks of devices as discussed herein may employ one or more wireless, wire/cable, and/or fiber optic links to facilitate information transport throughout the network.

[0070] The term "user interface" as used herein refers to an interface between a human user or operator and one or more devices that enables communication between the user and the device(s). Examples of user interfaces that may be employed in various implementations of the present invention include, but are not limited to, switches, human-machine interfaces, operator interfaces, potentiometers, but-

tons, dials, sliders, a mouse, keyboard, keypad, various types of game controllers (e.g., joysticks), track balls, display screens, various types of graphical user interfaces (GUIs), touch screens, microphones and other types of sensors that may receive some form of human-generated stimulus and generate a signal in response thereto.

[0071] The following patents and patent applications are hereby incorporated herein by reference:

[0072] U.S. Pat. No. 6,016,038, issued Jan. 18, 2000, entitled "Multicolored LED Lighting Method and Apparatus;"

[0073] U.S. Pat. No. 6,211,626, issued Apr. 3, 2001 to Lys et al, entitled "Illumination Components;"

[0074] U.S. patent application Ser. No. 09/870,193, filed May 30, 2001, entitled "Methods and Apparatus for Controlling Devices in a Networked Lighting System;" U.S. patent application Ser. No. 09/344,699, filed Jun. 25, 1999, entitled "Method for Software Driven Generation of Multiple Simultaneous High Speed Pulse Width Modulated Signals;"

[0075] U.S. patent application Ser. No. 09/805,368, filed Mar. 13, 2001, entitled "Light-Emitting Diode Based Products;"

[0076] U.S. patent application Ser. No. 09/663,969, filed Sep. 19, 2000, entitled "Universal Lighting Network Methods and Systems;"

[0077] U.S. patent application Ser. No. 09/716,819, filed Nov. 20, 2000, entitled "Systems and Methods for Generating and Modulating Illumination Conditions;"

[0078] U.S. patent application Ser. No. 09/675,419, filed Sep. 29, 2000, entitled "Systems and Methods for Calibrating Light Output by Light-Emitting Diodes;"

[0079] U.S. patent application Ser. No. 09/870,418, filed May 30, 2001, entitled "A Method and Apparatus for Authoring and Playing Back Lighting Sequences;"

[0080] U.S. patent application Ser. No. 10/045,629, filed Oct. 25, 2001, entitled "Methods and Apparatus for Controlling Illumination;"

[0081] U.S. patent application Ser. No. 10/245,786, filed Sep. 17, 2002, entitled "Light Emitting Diode Based Products"; and

[0082] U.S. patent application Ser. No. 10/245,788, filed Sep. 17, 2002, entitled "Methods and Apparatus for Generating and Modulating White Light Illumination Conditions."

BRIEF DESCRIPTION OF THE DRAWINGS

[0083] **FIG. 1** illustrates one example of a lighting unit that may serve as a device in a lighting environment according to one embodiment of the present invention.

[0084] **FIG. 2** depicts a lighting system with a plurality of lighting units and a central controller.

[0085] **FIG. 3** depicts various configurations of lighting systems **100**.

[0086] **FIG. 4** depicts optical facilities for optically operating on light from a lighting unit **100**.

[0087] **FIG. 5** depicts another embodiment of an optical facility.

[0088] **FIG. 6** depicts a schematic diagram for an optical facility that is controlled by a processor in conjunction with control of a lighting system, and that is capable of receiving input from a sensor.

[0089] **FIG. 7** depicts a mechanical actuator for changing the operative effect of an optical facility.

[0090] **FIG. 8** depicts another system for actuating an optical facility to change under the control of a processor.

[0091] **FIG. 9** depicts another system for actuating an optical facility to change configuration under the control of a processor.

[0092] **FIG. 10** depicts a digital mirror optical facility for reflecting light from a light system.

[0093] **FIG. 11** depicts a spinning mirror system optical facility.

[0094] **FIG. 12** depicts a grating light valve optical facility.

[0095] **FIG. 13** depicts an acousto-optical modulator as an optical facility.

[0096] **FIG. 14** depicts an illumination system for reflecting light on an object from a wide variety of beam angles.

[0097] **FIG. 15** depicts **FIG. 16** depicts an example of a secondary optical facility for shaping and forming light emission from a lighting system.

[0098] **FIG. 17** depicts a configuration for a lighting system with a light pipe optical facility.

[0099] **FIG. 18** depicts a color mixing system.

[0100] **FIG. 19** depicts an optical facility with a plurality of cylindrical elements.

[0101] **FIG. 20** depicts a microlens array optical facility.

[0102] **FIG. 21** depicts another configuration of a microlens array optical facility.

[0103] **FIG. 22** depicts a flexible materials bearing a microlens array optical facility.

[0104] **FIG. 23** depicts a cylindrical configuration of a flexible microlens array optical facility.

[0105] **FIG. 24** depicts a sytem for rolling a flexible microlens array optical facility.

[0106] **FIG. 25** depicts a chromaticity diagram.

[0107] **FIG. 26** depicts an airplane environment for a lighting system.

[0108] **FIG. 27** depicts an airplane interior environment for a multi-purpose lighting system.

[0109] **FIG. 28** depicts a vehicle environment for a multi-purpose lighting system.

[0110] **FIG. 29** depicts an environment for lighting an object under display.

[0111] **FIG. 30** depicts a sign that includes one or more lighting units.

[0112] **FIG. 31** depicts an exterior sign with one or more lighting units.

[0113] **FIG. 32** depicts another embodiment of a sign lighting system.

[0114] **FIG. 33** depicts a medical environment for a lighting system.

[0115] **FIG. 34** depicts an art object under a lighting system.

[0116] **FIG. 35** depicts a three-dimensional object under a lighting system.

[0117] **FIG. 36** depicts a foreground object and a background, both with lighting systems.

[0118] **FIG. 37** depicts a person in a seat under a lighting system.

[0119] **FIG. 38** depicts a lighting system in a cabinet environment.

[0120] **FIG. 39** depicts a lighting system for an object in a cabinet environment.

[0121] **FIG. 40** depicts a lighting system for a workplace environment.

[0122] **FIG. 41** depicts a lighting system for a seating environment.

[0123] **FIG. 42** depicts a lighting system for an entertainment environment.

[0124] **FIG. 43** depicts a lighting system for a camera environment.

[0125] **FIG. 44** depicts a light controller with a slide and a switch.

[0126] **FIG. 45** depicts a light controller with dual slides and a switch.

[0127] **FIG. 46** depicts a light controller with a dial.

[0128] **FIG. 47** depicts a dual-dial light controller.

[0129] **FIG. 48** is a schematic diagram for a home network control system that controls a lighting system.

[0130] **FIG. 49** is a schematic diagram for a dial-based lighting control unit.

[0131] **FIG. 50** is a flow diagram showing steps for lighting control using a dimmer having memory.

[0132] **FIG. 51** is a flow diagram showing steps for lighting control based on stored modes.

[0133] **FIG. 52** is a schematic diagram for a lighting control system with inputs from a computer network.

[0134] **FIG. 53** illustrates a lighting unit with a dial for setting a lighting condition.

[0135] **FIG. 54** illustrates a lighting unit with a slide for setting a lighting condition.

[0136] **FIG. 55** illustrates a lighting unit with a port for receiving data to control a lighting condition.

[0137] **FIG. 56** illustrates a lighting unit with a base that includes a processor for controlling a lighting condition.

[0138] **FIG. 57** is a flow diagram showing steps for allowing only authorized users to change a lighting condition.

[0139] **FIG. 58** illustrates modes for controlling a lighting condition.

[0140] **FIG. 59** is a flow diagram that illustrates using a stored algorithm to operate on data to trigger a lighting event.

[0141] **FIG. 60** is a flow diagram that illustrates applying algorithms to sensed conditions to trigger illumination control signals.

[0142] **FIG. 61** is a flow diagram with steps for applying timing algorithms to control lighting conditions.

[0143] **FIG. 62** is a schematic diagram showing responses of the eye to light.

[0144] **FIG. 63** is a schematic diagram showing square waves for a PWM signal.

[0145] **FIG. 64** is a schematic diagram showing square waves for a PAM/PWM signal.

[0146] **FIG. 65** is a schematic diagram showing spectral shift in light output from an LED as a result of current shift.

[0147] **FIG. 66** is a schematic diagram showing a modulated spectral shift in light output from an LED based on a combination of current control and PWM control.

[0148] **FIG. 67** is a schematic diagram showing a perceived broadening of wavelength based on modulated control of current and pulse width in an LED system.

[0149] **FIG. 68** shows a spectrum that can result from modulating multiple LEDs with both current and pulse width.

[0150] **FIG. 69** is a schematic diagram of a controller that can offer both current control and PWM control.

DETAILED DESCRIPTION

[0151] Various embodiments of the present invention are described below, including certain embodiments relating particularly to LED-based light sources. It should be appreciated, however, that the present invention is not limited to any particular manner of implementation, and that the various embodiments discussed explicitly herein are primarily for purposes of illustration. For example, the various concepts discussed herein may be suitably implemented in a variety of environments involving LED-based light sources, other types of light sources not including LEDs, environments that involve both LEDs and other types of light sources in combination, and environments that involve non-lighting-related devices alone or in combination with various types of light sources.

[0152] **FIG. 1** illustrates one example of a lighting unit **100** that may serve as a device in a lighting environment according to one embodiment of the present invention. Some examples of LED-based lighting units similar to those that are described below in connection with **FIG. 1** may be found, for example, in U.S. Pat. No. 6,016,038, issued Jan. 18, 2000 to Mueller et al., entitled "Multicolored LED

Lighting Method and Apparatus," and U.S. Pat. No. 6,211,626, issued Apr. 3, 2001 to Lys et al, entitled "Illumination Components," which patents are both hereby incorporated herein by reference.

[0153] In various embodiments of the present invention, the lighting unit **100** shown in **FIG. 1** may be used alone or together with other similar lighting units in a system of lighting units (e.g., as discussed further below in connection with **FIG. 2**). Used alone or in combination with other lighting units, the lighting unit **100** may be employed in a variety of applications including, but not limited to, interior or exterior space illumination in general, direct or indirect illumination of objects or spaces, theatrical or other entertainment-based/special effects illumination, decorative illumination, safety-oriented illumination, vehicular illumination, illumination of displays and/or merchandise (e.g. for advertising and/or in retail/consumer environments), combined illumination and communication systems, etc., as well as for various indication and informational purposes.

[0154] Additionally, one or more lighting units similar to that described in connection with **FIG. 1** may be implemented in a variety of products including, but not limited to, various forms of light modules or bulbs having various shapes and electrical/mechanical coupling arrangements (including replacement or "retrofit" modules or bulbs adapted for use in conventional sockets or fixtures), as well as a variety of consumer and/or household products (e.g., night lights, toys, games or game components, entertainment components or systems, utensils, appliances, kitchen aids, cleaning products, etc.).

[0155] In one embodiment, the lighting unit **100** shown in **FIG. 1** may include one or more light sources **104**A, **104**B, **104**C, and **104**D (collectively **104**) wherein one or more of the light sources may be an LED-based light source that includes one or more light emitting diodes (LEDs). In one aspect of this embodiment, any two or more of the light sources **104**A, **104**B, **104**C and **104**D may be adapted to generate radiation of different colors (e.g. red, green, and blue, respectively). Although **FIG. 1** shows four light sources **104**A, **104**B, **104**C, and **104**D, it should be appreciated that the lighting unit is not limited in this respect, as different numbers and various types of light sources (all LED-based light sources, LED-based and non-LED-based light sources in combination, etc.) adapted to generate radiation of a variety of different colors, including essentially white light, may be employed in the lighting unit **100**, as discussed further below.

[0156] As shown in **FIG. 1**, the lighting unit **100** also may include a processor **102** that is configured to output one or more control signals to drive the light sources **104**A, **104**B, **104**C and **104**D so as to generate various intensities of light from the light sources. For example, in one implementation, the processor **102** may be configured to output at least one control signal for each light source so as to independently control the intensity of light generated by each light source. Some examples of control signals that may be generated by the processor to control the light sources include, but are not limited to, pulse modulated signals, pulse width modulated signals (PWM), pulse amplitude modulated signals (PAM), pulse displacement modulated signals, analog control signals (e.g., current control signals, voltage control signals), combinations and/or modulations of the foregoing signals, or other control signals. In one aspect, the processor **102** may control other dedicated circuitry (not shown in **FIG. 1**), which in turn controls the light sources so as to vary their respective intensities.

[0157] Lighting systems in accordance with this specification can operate LEDs in an efficient manner. Typical LED performance characteristics depend on the amount of current drawn by the LED. The optimal efficacy may be obtained at a lower current than the level where maximum brightness occurs. LEDs are typically driven well above their most efficient operating current to increase the brightness delivered by the LED while maintaining a reasonable life expectancy. As a result, increased efficacy can be provided when the maximum current value of the PWM signal may be variable. For example, if the desired light output is less than the maximum required output the current maximum and/or the PWM signal width may be reduced. This may result in pulse amplitude modulation (PAM), for example; however, the width and amplitude of the current used to drive the LED may be varied to optimize the LED performance. In an embodiment, a lighting system may also be adapted to provide only amplitude control of the current through the LED. While many of the embodiments provided herein describe the use of PWM and PAM to drive the LEDs, one skilled in the art would appreciate that there are many techniques to accomplish the LED control described herein and, as such, the scope of the present invention is not limited by any one control technique. In embodiments, it is possible to use other techniques, such as pulse frequency modulation (PFM), or pulse displacement modulation (PDM), such as in combination with either or both of PWM and PAM.

[0158] Pulse width modulation (PWM) involves supplying a substantially constant current to the LEDs for particular periods of time. The shorter the time, or pulse-width, the less brightness an observer will observe in the resulting light. The human eye integrates the light it receives over a period of time and, even though the current through the LED may generate the same light level regardless of pulse duration, the eye will perceive short pulses as "dimmer" than longer pulses. The PWM technique is considered on of the preferred techniques for driving LEDs, although the present invention is not limited to such control techniques. When two or more colored LEDs are provided in a lighting system, the colors may be mixed and many variations of colors can be generated by changing the intensity, or perceived intensity, of the LEDs. In an embodiment, three colors of LEDs are presented (e.g., red, green and blue) and each of the colors is driven with PWM to vary its apparent intensity. This system allows for the generation of millions of colors (e.g., 16.7 million colors when 8-bit control is used on each of the PWM channels).

[0159] In an embodiment the LEDs are modulated with PWM as well as modulating the amplitude of the current driving the LEDs (Pulse Amplitude Modulation, or PAM). **FIG. 15** illustrates an LED efficiency curve **1502**. As can be seen from **FIG. 15**, the LED efficiency increases to a maximum followed by decreasing efficiency. Typically, LEDs are driven at a current level beyond its maximum efficiency to attain greater brightness while maintaining acceptable life expectancy. The objective is typically to maximize the light output from the LED while maintaining an acceptable lifetime. In an embodiment, the LEDs may be driven with a lower current maximum when lower intensi-

ties are desired. PWM may still be used, but the maximum current intensity may also be varied depending on the desired light output. For example, to decrease the intensity of the light output from a maximum operational point such as **1504**, the amplitude of the current may be decreased until the maximum efficiency is achieved. If further reductions in the LED brightness are desired the PWM activation may be reduced to reduce the apparent brightness.

[**0160**] In one embodiment of the lighting unit **100**, one or more of the light sources **104**A, **104**B, **104**C and **104**D shown in **FIG. 1** may include a group of multiple LEDs or other types of light sources (e.g., various parallel and/or serial connections of LEDs or other types of light sources) that are controlled together by the processor **102**. Additionally, it should be appreciated that one or more of the light sources **104**A, **104**B, **104**C and **104**D may include one or more LEDs that are adapted to generate radiation having any of a variety of spectra (i.e., wavelengths or wavelength bands), including, but not limited to, various visible colors (including essentially white light), various color temperatures of white light, ultraviolet, or infrared.

[**0161**] In another aspect of the lighting unit **100** shown in **FIG. 1**, the lighting unit **100** may be constructed and arranged to produce a wide range of variable color radiation. For example, the lighting unit **100** may be particularly arranged such that the processor-controlled variable intensity light generated by two or more of the light sources combines to produce a mixed colored light (including essentially white light having a variety of color temperatures). In particular, the color (or color temperature) of the mixed colored light may be varied by varying one or more of the respective intensities of the light sources (e.g., in response to one or more control signals output by the processor **102**). Furthermore, the processor **102** may be particularly configured (e.g., programmed) to provide control signals to one or more of the light sources so as to generate a variety of static or time-varying (dynamic) multi-color (or multi-color temperature) lighting effects.

[**0162**] As shown in **FIG. 1**, the lighting unit **100** also may include a memory **114** to store various information. For example, the memory **114** may be employed to store one or more lighting programs for execution by the processor **102** (e.g., to generate one or more control signals for the light sources), as well as various types of data useful for generating variable color radiation (e.g., calibration information, discussed further below). The memory **114** also may store one or more particular identifiers (e.g., a serial number, an address, etc.) that may be used either locally or on a system level to identify the lighting unit **100**. In various embodiments, such identifiers may be pre-programmed by a manufacturer, for example, and may be either alterable or non-alterable thereafter (e.g., via some type of user interface located on the lighting unit, via one or more data or control signals received by the lighting unit, etc.). Alternatively, such identifiers may be determined at the time of initial use of the lighting unit in the field, and again may be alterable or non-alterable thereafter.

[**0163**] One issue that may arise in connection with controlling multiple light sources in the lighting unit **100** of **FIG. 1**, and controlling multiple lighting units **100** in a lighting system (e.g., as discussed below in connection with **FIG. 2**), relates to potentially perceptible differences in light output between substantially similar light sources. For example, given two virtually identical light sources being driven by respective identical control signals, the actual intensity of light output by each light source may be perceptibly different. Such a difference in light output may be attributed to various factors including, for example, slight manufacturing differences between the light sources, normal wear and tear over time of the light sources that may differently alter the respective spectrums of the generated radiation, etc. For purposes of the present discussion, light sources for which a particular relationship between a control signal and resulting intensity are not known are referred to as "uncalibrated" light sources.

[**0164**] The use of one or more uncalibrated light sources in the lighting unit **100** shown in **FIG. 1** may result in generation of light having an unpredictable, or "uncalibrated," color or color temperature. For example, consider a first lighting unit including a first uncalibrated red light source and a first uncalibrated blue light source, each controlled by a corresponding control signal having an adjustable parameter in a range of from zero to 255 (0-255). For purposes of this example, if the red control signal is set to zero, blue light is generated, whereas if the blue control signal is set to zero, red light is generated. However, if both control signals are varied from non-zero values, a variety of perceptibly different colors may be produced (e.g., in this example, at very least, many different shades of purple are possible). In particular, perhaps a particular desired color (e.g., lavender) is given by a red control signal having a value of 125 and a blue control signal having a value of 200.

[**0165**] Now consider a second lighting unit including a second uncalibrated red light source substantially similar to the first uncalibrated red light source of the first lighting unit, and a second uncalibrated blue light source substantially similar to the first uncalibrated blue light source of the first lighting unit. As discussed above, even if both of the uncalibrated red light sources are driven by respective identical control signals, the actual intensity of light output by each red light source may be perceptibly different. Similarly, even if both of the uncalibrated blue light sources are driven by respective identical control signals, the actual intensity of light output by each blue light source may be perceptibly different.

[**0166**] With the foregoing in mind, it should be appreciated that if multiple uncalibrated light sources are used in combination in lighting units to produce a mixed colored light as discussed above, the observed color (or color temperature) of light produced by different lighting units under identical control conditions may be perceivably different. Specifically, consider again the "lavender" example above; the "first lavender" produced by the first lighting unit with a red control signal of 125 and a blue control signal of 200 indeed may be perceptibly different than a "second lavender" produced by the second lighting unit with a red control signal of 125 and a blue control signal of 200. More generally, the first and second lighting units generate uncalibrated colors by virtue of their uncalibrated light sources.

[**0167**] In view of the foregoing, in one embodiment of the present invention, the lighting unit **100** includes calibration means to facilitate the generation of light having a calibrated (e.g., predictable, reproducible) color at any given time. In one aspect, the calibration means is configured to adjust the

light output of at least some light sources of the lighting unit so as to compensate for perceptible differences between similar light sources used in different lighting units.

[0168] For example, in one embodiment, the processor **102** of the lighting unit **100** is configured to control one or more of the light sources **104**A, **104**B, **104**C and **104**D so as to output radiation at a calibrated intensity that substantially corresponds in a predetermined manner to a control signal for the light source(s). As a result of mixing radiation having different spectra and respective calibrated intensities, a calibrated color is produced. In one aspect of this embodiment, at least one calibration value for each light source is stored in the memory **114**, and the processor is programmed to apply the respective calibration values to the control signals for the corresponding light sources so as to generate the calibrated intensities.

[0169] In one aspect of this embodiment, one or more calibration values may be determined once (e.g., during a lighting unit manufacturing/testing phase) and stored in the memory **114** for use by the processor **102**. In another aspect, the processor **102** may be configured to derive one or more calibration values dynamically (e.g. from time to time) with the aid of one or more photosensors, for example. In various embodiments, the photosensor(s) may be one or more external components coupled to the lighting unit, or alternatively may be integrated as part of the lighting unit itself. A photosensor is one example of a signal source that may be integrated or otherwise associated with the lighting unit **100**, and monitored by the processor **102** in connection with the operation of the lighting unit. Other examples of such signal sources are discussed further below, in connection with the signal source **124** shown in **FIG. 1**.

[0170] One exemplary method that may be implemented by the processor **102** to derive one or more calibration values includes applying a reference control signal to a light source, and measuring (e.g., via one or more photosensors) an intensity of radiation thus generated by the light source. The processor may be programmed to then make a comparison of the measured intensity and at least one reference value (e.g., representing an intensity that nominally would be expected in response to the reference control signal). Based on such a comparison, the processor may determine one or more calibration values for the light source. In particular, the processor may derive a calibration value such that, when applied to the reference control signal, the light source outputs radiation having an intensity that corresponds to the reference value (i.e., the "expected" intensity).

[0171] In various aspects, one calibration value may be derived for an entire range of control signal/output intensities for a given light source. Alternatively, multiple calibration values may be derived for a given light source (i.e., a number of calibration value "samples" may be obtained) that are respectively applied over different control signal/output intensity ranges, to approximate a nonlinear calibration function in a piecewise linear manner.

[0172] In another aspect, as also shown in **FIG. 1**, the lighting unit **100** optionally may include one or more user interfaces **118** that are provided to facilitate any of a number of user-selectable settings or functions (e.g., generally controlling the light output of the lighting unit **100**, changing and/or selecting various pre-programmed lighting effects to be generated by the lighting unit, changing and/or selecting various parameters of selected lighting effects, setting particular identifiers such as addresses or serial numbers for the lighting unit, etc.). In various embodiments, the communication between the user interface **118** and the lighting unit may be accomplished through wire or cable, or wireless transmission.

[0173] In one implementation, the processor **102** of the lighting unit monitors the user interface **118** and controls one or more of the light sources **104**A, **104**B, **104**C and **104**D based at least in part on a user's operation of the interface. For example, the processor **102** may be configured to respond to operation of the user interface by originating one or more control signals for controlling one or more of the light sources. Alternatively, the processor **102** may be configured to respond by selecting one or more pre-programmed control signals stored in memory, modifying control signals generated by executing a lighting program, selecting and executing a new lighting program from memory, or otherwise affecting the radiation generated by one or more of the light sources.

[0174] In particular, in one implementation, the user interface **118** may constitute one or more switches (e.g., a standard wall switch) that interrupt power to the processor **102**. In one aspect of this implementation, the processor **102** is configured to monitor the power as controlled by the user interface, and in turn control one or more of the light sources **104**A, **104**B, **104**C and **104**D based at least in part on a duration of a power interruption caused by operation of the user interface. As discussed above, the processor may be particularly configured to respond to a predetermined duration of a power interruption by, for example, selecting one or more pre-programmed control signals stored in memory, modifying control signals generated by executing a lighting program, selecting and executing a new lighting program from memory, or otherwise affecting the radiation generated by one or more of the light sources.

[0175] **FIG. 1** also illustrates that the lighting unit **100** may be configured to receive one or more signals **122** from one or more other signal sources **124**. In one implementation, the processor **102** of the lighting unit may use the signal(s) **122**, either alone or in combination with other control signals (e.g., signals generated by executing a lighting program, one or more outputs from a user interface, etc.), so as to control one or more of the light sources **104** (**104**A, **104**B, **104**C and **104**D) in a manner similar to that discussed above in connection with the user interface.

[0176] Examples of the signal(s) **122** that may be received and processed by the processor **102** include, but are not limited to, one or more audio signals, video signals, power signals, various types of data signals, signals representing information obtained from a network (e.g., the Internet), signals representing some detectable/sensed condition, signals from lighting units, signals consisting of modulated light, etc. In various implementations, the signal source(s) **124** may be located remotely from the lighting unit **100**, or included as a component of the lighting unit. For example, in one embodiment, a signal from one lighting unit **100** could be sent over a network to another lighting unit **100**.

[0177] Some examples of a signal source **124** that may be employed in, or used in connection with, the lighting unit **100** of **FIG. 1** include any of a variety of sensors or transducers that generate one or more signals **122** in

response to some stimulus. Examples of such sensors include, but are not limited to, various types of environmental condition sensors, such as thermally sensitive (e.g., temperature, infrared) sensors, humidity sensors, motion sensors, photosensors/light sensors (e.g., sensors that are sensitive to one or more particular spectra of electromagnetic radiation), sound or vibration sensors or other pressure/force transducers (e.g., microphones, piezoelectric devices), and the like.

[**0178**] Additional examples of a signal source **124** include various metering/detection devices that monitor electrical signals or characteristics (e.g., voltage, current, power, resistance, capacitance, inductance, etc.) or chemical/biological characteristics (e.g., acidity, a presence of one or more particular chemical or biological agents, bacteria, etc.) and provide one or more signals **122** based on measured values of the signals or characteristics. Yet other examples of a signal source **124** include various types of scanners, image recognition systems, voice or other sound recognition systems, artificial intelligence and robotics systems, and the like.

[**0179**] A signal source **124** could also be a lighting unit **100**, a processor **102**, or any one of many available signal generating devices, such as media players, MP3 players, computers, DVD players, CD players, television signal sources, camera signal sources, microphones, speakers, telephones, cellular phones, instant messenger devices, SMS devices, wireless devices, personal organizer devices, and many others.

[**0180**] In one embodiment, the lighting unit **100** shown in **FIG. 1** also may include one or more optical facilities **130** to optically process the radiation generated by the light sources **104**A, **104**B, **104**C and **104**D. For example, one or more optical facilities may be configured so as to change one or both of a spatial distribution and a propagation direction of the generated radiation. In particular, one or more optical facilities may be configured to change a diffusion angle of the generated radiation. In one aspect of this embodiment, one or more optical facilities **130** may be particularly configured to variably change one or both of a spatial distribution and a propagation direction of the generated radiation (e.g., in response to some electrical and/or mechanical stimulus). Examples of optical facilities that may be included in the lighting unit **100** include, but are not limited to, reflective materials, refractive materials, translucent materials, filters, lenses, mirrors, and fiber optics. The optical facility **130** also may include a phosphorescent material, luminescent material, or other material capable of responding to or interacting with the generated radiation.

[**0181**] As also shown in **FIG. 1**, the lighting unit **100** may include one or more communication ports **120** to facilitate coupling of the lighting unit **100** to any of a variety of other devices. For example, one or more communication ports **120** may facilitate coupling multiple lighting units together as a networked lighting system, in which at least some of the lighting units are addressable (e.g., have particular identifiers or addresses) and are responsive to particular data transported across the network.

[**0182**] In particular, in a networked lighting system environment, as discussed in greater detail further below (e.g., in connection with **FIG. 2**), as data is communicated via the network, the processor **102** of each lighting unit coupled to the network may be configured to be responsive to particular data (e.g., lighting control commands) that pertain to it (e.g., in some cases, as dictated by the respective identifiers of the networked lighting units). Once a given processor identifies particular data intended for it, it may read the data and, for example, change the lighting conditions produced by its light sources according to the received data (e.g., by generating appropriate control signals to the light sources). In one aspect, the memory **114** of each lighting unit coupled to the network may be loaded, for example, with a table of lighting control signals that correspond with data the processor **102** receives. Once the processor **102** receives data from the network, the processor may consult the table to select the control signals that correspond to the received data, and control the light sources of the lighting unit accordingly.

[**0183**] In one aspect of this embodiment, the processor **102** of a given lighting unit, whether or not coupled to a network, may be configured to interpret lighting instructions/data that are received in a DMX protocol (as discussed, for example, in U.S. Pat. Nos. 6,016,038 and 6,211,626), which is a lighting command protocol conventionally employed in the lighting industry for some programmable lighting applications. However, it should be appreciated that lighting units suitable for purposes of the present invention are not limited in this respect, as lighting units according to various embodiments may be configured to be responsive to other types of communication protocols so as to control their respective light sources.

[**0184**] In one embodiment, the lighting unit **100** of **FIG. 1** may include and/or be coupled to one or more power sources **108**. In various aspects, examples of power source(s) **108** include, but are not limited to, AC power sources, DC power sources, batteries, solar-based power sources, thermoelectric or mechanical-based power sources and the like. Additionally, in one aspect, the power source(s) **108** may include or be associated with one or more power conversion devices that convert power received by an external power source to a form suitable for operation of the lighting unit **100**.

[**0185**] While not shown explicitly in **FIG. 1**, the lighting unit **100** may be implemented in any one of several different structural configurations according to various embodiments of the present invention. For example, a given lighting unit may have any one of a variety of mounting arrangements for the light source(s), enclosure/housing arrangements and shapes to partially or fully enclose the light sources, and/or electrical and mechanical connection configurations. In particular, a lighting unit may be configured as a replacement or "retrofit" to engage electrically and mechanically in a conventional socket or fixture arrangement (e.g., an Edison-type screw socket, a halogen fixture arrangement, a fluorescent fixture arrangement, etc.).

[**0186**] Additionally, one or more optical facilities as discussed above may be partially or fully integrated with an enclosure/housing arrangement for the lighting unit. Furthermore, a given lighting unit optionally may be associated with (e.g., include, be coupled to and/or packaged together with) various other components (e.g., control circuitry such as the processor and/or memory, one or more sensors/transducers/signal sources, user interfaces, displays, power sources, power conversion devices, etc.) relating to the operation of the light source(s).

[0187] **FIG. 2** illustrates an example of a networked lighting system **200** according to one embodiment of the present invention. In the embodiment of **FIG. 2**, a number of lighting units **100**, similar to those discussed above in connection with **FIG. 1**, are coupled together to form the networked lighting system. It should be appreciated, however, that the particular configuration and arrangement of lighting units shown in **FIG. 2** is for purposes of illustration only, and that the invention is not limited to the particular system topology shown in **FIG. 2**.

[0188] Additionally, while not shown explicitly in **FIG. 2**, it should be appreciated that the networked lighting system **200** may be configured flexibly to include one or more user interfaces, as well as one or more signal sources such as sensors/transducers. For example, one or more user interfaces and/or one or more signal sources such as sensors/transducers (as discussed above in connection with **FIG. 1**) may be associated with any one or more of the lighting units of the networked lighting system **200**. Alternatively (or in addition to the foregoing), one or more user interfaces and/or one or more signal sources may be implemented as "stand alone" components in the networked lighting system **200**. Whether stand alone components or particularly associated with one or more lighting units **100**, these devices may be "shared" by the lighting units of the networked lighting system. Stated differently, one or more user interfaces and/or one or more signal sources such as sensors/transducers may constitute "shared resources" in the networked lighting system that may be used in connection with controlling any one or more of the lighting units of the system.

[0189] As shown in the embodiment of **FIG. 2**, the lighting system **200** may include one or more lighting unit controllers (hereinafter "LUCs") **208**A, **208**B, **208**C and **208**D, wherein each LUC is responsible for communicating with and generally controlling one or more lighting units **100** coupled to it. Although **FIG. 2** illustrates four lighting units **100** coupled in a serial fashion to a given LUC, it should be appreciated that the invention is not limited in this respect, as different numbers of lighting units **100** may be coupled to a given LUC in a variety of different configurations using a variety of different communication media and protocols.

[0190] In the system of **FIG. 2**, each LUC in turn may be coupled to a central controller **202** that is configured to communicate with one or more LUCs. Although **FIG. 2** shows four LUCs coupled to the central controller **202** via a switching or coupling device **204**, it should be appreciated that according to various embodiments, different numbers of LUCs may be coupled to the central controller **202**. Additionally, according to various embodiments of the present invention, the LUCs and the central controller may be coupled together in a variety of configurations using a variety of different communication media and protocols to form the networked lighting system **200**. Moreover, it should be appreciated that the interconnection of LUCs and the central controller, and the interconnection of lighting units to respective LUCs, may be accomplished in different manners (e.g., using different configurations, communication media, and protocols).

[0191] For example, according to one embodiment of the present invention, the central controller **202** shown in **FIG. 2** may by configured to implement Ethernet-based communications with the LUCs, and in turn the LUCs may be configured to implement DMX-based communications with the lighting units **100**. In particular, in one aspect of this embodiment, each LUC may be configured as an addressable Ethernet-based controller and accordingly may be identifiable to the central controller **202** via a particular unique address (or a unique group of addresses) using an Ethernet-based protocol. In this manner, the central controller **202** may be configured to support Ethernet communications throughout the network of coupled LUCs, and each LUC may respond to those communications intended for it. In turn, each LUC may communicate lighting control information to one or more lighting units coupled to it, for example, via a DMX protocol, based on the Ethernet communications with the central controller **202**.

[0192] More specifically, according to one embodiment, the LUCs **208**A, **208**B, **208**C and **208**D shown in **FIG. 2** may be configured to be "intelligent" in that the central controller **202** may be configured to communicate higher level commands to the LUCs that need to be interpreted by the LUCs before lighting control information can be forwarded to the lighting units **100**. For example, a lighting system operator may want to generate a color changing effect that varies colors from lighting unit to lighting unit in such a way as to generate the appearance of a propagating rainbow of colors ("rainbow chase"), given a particular placement of lighting units with respect to one another. In this example, the operator may provide a simple instruction to the central controller **202** to accomplish this, and in turn the central controller may communicate to one or more LUCs using an Ethernet-based protocol high-level command to generate a "rainbow chase." The command may contain timing, intensity, hue, saturation or other relevant information, for example. When a given LUC receives such a command, it may then interpret the command so as to generate the appropriate lighting control signals which it then communicates using a DMX protocol via any of a variety of signaling techniques (e.g., PWM) to one or more lighting units that it controls.

[0193] It should again be appreciated that the foregoing example of using multiple different communication implementations (e.g., Ethernet/DMX) in a lighting system according to one embodiment of the present invention is for purposes of illustration only, and that the invention is not limited to this particular example.

[0194] Referring to **FIG. 3**, various configurations can be provided for lighting units **100**, in each case with an optional communications facility **120**. Configurations include a linear configuration **302** (which may be curvilinear in embodiments), a circular configuration **308**, an oval configuration **304**, or a collection of various configurations **302**, **304**, **308**. Lighting units **100** can also include a wide variety of colors of LED, in various mixtures, including red, green, and blue LEDs to produce a color mix, as well as one or more other LEDs to create varying colors and color temperatures of white light. For example, red, green and blue can be mixed with amber, white, UV, orange, IR or other colors of LED. Amber and white LEDs can be mixed to offer varying colors and color temperatures of white. Any combination of LED colors can produce a gamut of colors, whether the LEDs are red, green, blue, amber, white, orange, UV, or other colors. The various embodiments described throughout this specification encompass all possible combinations of LEDs in

lighting units **100**, so that light of varying color, intensity, saturation and color temperature can be produced on demand under control of a processor **102**. Combinations of LEDs with other mechanisms, such as phosphors, are also encompassed herein.

[**0195**] Although mixtures of red, green and blue have been proposed for light due to their ability to create a wide gamut of additively mixed colors, the general color quality or color rendering capability of such systems are not ideal for all applications. This is primarily due to the narrow bandwidth of current red, green and blue emitters. However, wider band sources do make possible good color rendering, as measured, for example, by the standard CRI index. In some cases this may require LED spectral outputs that are not currently available. However, it is known that wider-band sources of light will become available, and such wider-band sources are encompassed as sources for lighting units **100** described herein.

[**0196**] Additionally, the addition of white LEDs (typically produced through a blue or UV LED plus a phosphor mechanism) does give a 'better' white it is still limiting in the color temperature that is controllable or selectable from such sources.

[**0197**] The addition of white to a red, green and blue mixture may not increase the gamut of available colors, but it can add a broader-band source to the mixture. The addition of an amber source to this mixture can improve the color still further by 'filling in' the gamut as well.

[**0198**] This combinations of light sources as lighting units **100** can help fill in the visible spectrum to faithfully reproduce desirable spectrums of lights. These include broad daylight equivalents or more discrete waveforms corresponding to other light sources or desirable light properties. Desirable properties include the ability to remove pieces of the spectrum for reasons that may include environments where certain wavelengths are absorbed or attenuated. Water, for example tends to absorb and attenuate most non-blue and non-green colors of light, so underwater applications may benefit from lights that combine blue and green sources for lighting units **100**.

[**0199**] Amber and white light sources can offer a color temperature selectable white source, wherein the color temperature of generated light can be selected along the black body curve by a line joining the chromaticity coordinates of the two sources. The color temperature selection is useful for specifying particular color temperature values for the lighting source.

[**0200**] Orange is another color whose spectral properties in combination with a white LED-based light source can be used to provide a controllable color temperature light from a lighting unit **100**.

[**0201**] The combination of white light with light of other colors as light sources for lighting units **100** can offer multi-purpose lights for many commercial and home applications, such as in pools, spas, automobiles, building interiors (commercial and residential), indirect lighting applications, such as alcove lighting, commercial point of purchase lighting, merchandising, toys, beauty, signage, aviation, marine, medical, submarine, space, military, consumer, under cabinet lighting, office furniture, landscape, residential including kitchen, home theater, bathroom, faucets, dining rooms, decks, garage, home office, household products, family rooms, tomb lighting, museums, photography, art applications, and many others.

[**0202**] Referring to **FIG. 4** and the subsequent figures, light sources **104** (e.g., LED system, and most luminaires) can utilize fixed or static as well as dynamic or variable optical facilities **130** to shape and control the beam of light from the fixture. [By contrast] In particular, variable optics provide discrete or continuous adjustment of beam spread or angle or simply the profile of the light beam emitted from a fixture. Properties can include, but are not limited to, adjusting the profile for surfaces that vary in distance from the fixture, such as wall washing fixtures. In various embodiments, the variable nature of the optic can be manually adjusted, adjusted by motion control or automatically be controlled dynamically.

[**0203**] Referring to **FIG. 4** and the subsequent figures, LED systems, and most luminaires, can utilize fixed or static optical facilities **130** to shape and control the beam of light from the fixture. By contrast, variable optics provide discrete or continuous adjustment of beam spread or angle or simply the profile of the light beam emitted from a fixture. Properties can include, but are not limited to, adjusting the profile for surfaces that vary in distance from the fixture, such as wall washing fixtures. In various embodiments, the variable nature of the optic can be manually adjusted, adjusted by motion control or automatically be controlled dynamically.

[**0204**] Actuation of variable optics can be through any kind of actuator, such as an electric motor, piezoelectric device, thermal actuator, motor, gyro, servo, lever, gear, gear system, screw drive, drive mechanism, flywheel, wheel, or one of many well-known techniques for motion control. Manual control can be through an adjustment mechanism that varies the relative geometry of lens, diffusion materials, reflecting surfaces or refracting elements. The adjustment mechanism may use a sliding element, a lever, screws, or other simple mechanical devices or combinations of simple mechanical devices. A manual adjustment or motion control adjustment may allow the flexing of optical surfaces to bend and shape the light passed through the system or reflected or refracted by the optical system.

[**0205**] Actuation can also be through an electromagnetic motor or one of many actuation materials and devices. Optical facilities **130** can also include other actuators, such as piezo-electric devices, MEMS devices, thermal actuators, processors **102**, and many other forms of actuators.

[**0206**] A wide range of optical facilities **130** can be used to control light. Such devices as Bragg cells or holographic films can be used as optical facilities **130** to vary the output of a fixture. A Bragg cell or acoustic-optic modulator can provide for the movement of light with no other moving mechanisms. The combination of controlling the color (hue, saturation and value) as well as the form of the light beam brings a tremendous amount of operative control to a light source. The use of polarizing films can be used to reduce glare and allow the illumination and viewing of objects that present specular surfaces, which typically are difficult to view. Moving lenses and shaped non-imaging surfaces can provide optical paths to guide and shape light.

[**0207**] In other embodiments, fluid-filled surfaces and shapes can be manipulated to provide an optical path. In

combination with light sources **104**, such shapes can provide varying optical properties across the surface and volume of the fluid-filled material. The fluid-filled material can also provide a thermal dissipation mechanism for the light-emitting elements. The fluid can be water, polymers, silicone or other transparent or translucent liquid or a gas of any type and mixture with desirable optical or thermal properties.

[**0208**] In other embodiments, gelled, filled shapes can be used in conjunction with light sources **104** to evenly illuminate said shapes. Light propagation and diffusion is accomplished through the scattering of light through the shape.

[**0209**] In other embodiments, spinning mirror systems such as those used in laser optics for scanning (E.g. bar code scanners or 3D terrain scanners) can be used to direct and move a beam of light. That combined with the ability to rapidly turn on and off a light source **104** can allow a beam of light to be spread across a larger area and change colors to 'draw' shapes of varying patterns. Other optical facilities **130** for deflecting and changing light patterns are known and described in the literature. They include methods for beam steering, such as mechanical mirrors, driven by stepper or galvanometer motors and more complex robotic mechanisms for producing sophisticated temporal effects or static control of both color (HS&V) and intensity. Optical facilities **130** also include acousto-optic modulators that use sound waves generated via piezoelectrics to control and steer a light beam. They also include digital mirror devices and digital light processors, such as available from Texas Instruments. They also include grating light valve technology (GLV), as well as inorganic digital light deflection. They also include dielectric mirrors, such as developed at Massachusetts Institute of Technology.—

[**0210**] Control of form and texture of the light can include not only control of the shape of the beam but control of the way in which the light is patterned across its beam. An example of a use of this technology may be in visual merchandising, where product 'spotlights' could be created while other media is playing in a coordinated manner. Voice-overs or music-overs or even video can be played during the point at which a product is highlighted during a presentation. Lights that move and 'dance' can be used in combination with A/V sources for visual merchandising purposes.

[**0211**] Additional material on variable optical facilities can be found in the following documents and publications, which are herein incorporated by reference: Optoelectronics, Fiber Optics, and Laser Cookbook by Thomas Petruzzellis 322 pages; McGraw-Hill/TAB Electronics; ISBN: 0070498407; (May 1, 1997); Digital Diffractive Optics: An Introduction to Planar Diffractive Optics and Related Technology by B. Kress, Patrick Meyrueis. John Wiley & Sons; ISBN: 0471984477; 1 edition (Oct. 25, 2000); Optical System Design by Robert E. Fischer, Biljana Tadic-Galeb, McGraw-Hill Professional; ISBN: 0071349162; 1st edition (Jun. 30, 2000); and Feynman Lectures On Physics (3 Volume Set) by Richard Phillips Feynman Addison-Wesley Pub Co; ISBN: 0201021153; (June 1970).

[**0212**] Optical facilities **130** can also comprise secondary optics, namely, optics (plastic, glass, imaging, non-imaging) added to an array of LEDs to shape and form the light emission. It can be used to spread, narrow, diffuse, diffract, refract or reflect the light in order that a different output property of the light is created. These can be fixed or variable. These can be light pipes, lenses, light guides and fibers and any other light transmitting materials.

[**0213**] In other embodiments, non-imaging optics are used as an optical facility **130**. Non-imaging optics do not use traditional lenses. They use shaped surfaces to diffuse and direct light. A fundamental issue with fixtures using discrete light sources is mixing the light to reduce or eliminate color shadows and to produce uniform and homogenous light output. Part of the issue is the use of high efficiency surfaces that do not absorb light but bounce and reflect the light in a desired direction or manner. Optical facilities **130** can be used to direct light to create optical forms of illumination from lighting units **100**.

[**0214**] Specific optical facilities **130** are of a wide variety. **FIG. 4** depicts one example of an optical facility **130** for optically operating on light from a light source **104**. Included is an actuator **402** for actuating a change in the optical effect that is caused by the optical facility **130**. For example, as shown in **FIG. 4**, the actuator **402** can be an electromechanical actuator that changes the direction of the optical facility **130**, in this case a lens **130**. The actuator **402** tilts, changing the direction of light that is received by the optical facility **130** from light source **104**.

[**0215**] **FIG. 5** shows another form of actuation by an actuator **402**. In this case the actuator actuates a change in the optical facility, in this case a change in the width of the lens **130**. The lens can optionally include a compressible fluid, so that upon actuation it expands. Upon expansion the optical effect of the optical facility **130** is different than it was in the unexpanded state. The actuator **402** can actuate such a change by changing temperature of the material include in the optical facility, by mechanically changing a dimension of the optical facility **130**, by compressing a gas or other fluid material into the optical facility **130**, or the like. The actuator **402** can be under control of a processor or similar facility. The optical facility **130** can also tilt like the actuator **402** of **FIG. 4**, so that a wide range of optical effects can be created, in each case operating on light from the lighting unit **100**.

[**0216**] Referring to **FIG. 6**, a processor **102** is used to operate both a light source **104** and the actuator **402** of the optical facility **130**. Optionally, two processors **102** could be used in conjunction with the two elements. The processor **102** is in operative connection to a signal source **124**, so that that the processor **102** can receive input from the signal source **124** (and, optionally, operate in a feedback loop with the signal source **124**). In embodiments the signal source **124** is a sensor. Thus, the processor **102** can provide control signals to the light source **104** and the actuator **402**, to coordinate the light source **104** with the optical facility **130** to produce a desired type of illumination or display. For example, the actuator **402** can be used to adjust the angle of the beam of light coming out of the light source **104**, such as to diffuse light across a given portion of a surface, such as a wall. In embodiments the light source **104** can be part of a linear lighting system, such as a cove light system, with the optical facility **130** setting the angle of the light from the cove light system to diffuse smoothly across a wall, providing a color wash on the wall.

[**0217**] Many types of signal sources **124** can be used, for sensing any condition or sending any kind of signal, such as

temperature, force, electricity, heat flux, voltage, current, magnetic field, pitch, roll, yaw, acceleration, rotational forces, wind, turbulence, flow, pressure, volume, fluid level, optical properties, luminosity, electromagnetic radiation, radio frequency radiation, sound, acoustic levels, decibels, particulate density, smoke, pollutant density, positron emissions, light levels, color, color temperature, color saturation, infrared radiation, x-ray radiation, ultraviolet radiation, visible spectrum radiation, states, logical states, bits, bytes, words, data, symbols, and many others described herein, described in the documents incorporated by reference herein, and known to those of ordinary skill in the arts.

[0218] **FIG. 7** depicts a mechanical actuator **704** for changing the operative effect of an optical facility **702**, in this case a lens **702** that alters the optical path of light from a light source **104**. In this case the shape of the lens **702** is altered by the linear movement of the actuator **704**, which moves a linear element **708** under the control of a processor **102**, which may be integrated with the actuator **704** or may be part of a separate system, such as a remote control. The processor **102** optionally controls the light source **104** as well, so that both the lens and the light source **104** can be controlled simultaneously to provide coordinated changes in the illumination coming from the lighting unit **100**. The processor **102** is also optionally responsive to a signal source **124**, which can be any sensor, such as those described in connection with **FIG. 6**. The actuator **704** thus slides the linear element **708** to bend the lens **702**, changing the index of refraction of the light that the lens **702** receives from the light source **104**. The light source **104** can be arranged as a linear source, circular source, rectangular source, or other shapes. The lens **702** can change the beam angle of the light coming from the light source **104**, to produce a variety of lighting effects, such as casting different patterns of light on a wall or object. The actuator **704** can be any type of actuator for providing linear movement, such as an electromechanical element, a screw drive mechanism (such as used in computer printers), a screw drive, or other element for linear movement known to those of ordinary skill in the art.

[0219] **FIG. 8** depicts another system for actuating an optical facility **130** to change under the control of a processor. In this case the optical facility is a fluid filled lens **802**, which contains a compressible fluid **808**, such as a gas or liquid. The actuator **804** includes a valve **810** for delivering fluid to the interior chamber of the lens **802**. The actuator **804** is [this] a pump or similar facility, which may be electromechanical, electrical or mechanical in nature. The actuator **804** pumps fluid **808** into or out of the interior of the lens **802**, causing the lens **802** to change in shape and thus bend light differently as it transmits through the lens **802**. In embodiments the fluid **808** may be selected to have an effect on the light; for example, it may be semi-opaque, so that it produces a glowing effect, or it may have bubbles that refract portions of the light. Any of a wide variety of fluids can be used, such as water, air, fluid polymers and the like. The actuator **804** is optionally controlled by a processor **102**, which may be integrated with it or separate from it and which in turn may optionally be responsive to a signal source **124**. The processor **102** optionally controls the light source **104**, so that coordinated control of the light source (e.g., color, intensity, saturation, and color temperature of light) as well as the effect on the light due to the lens **802** may be achieved.

[0220] **FIG. 9** depicts another optical facility **130**, in this case a fluid-filled lens **902** that operates in response to a pressurizing system **904**, which induces pressure changes in the interior chamber **908** of the lens, such as by increasing the amount of fluid in the chamber **908** or by changing the temperature of the chamber, thus inducing a volume expansion of a gas inside the chamber **908**. The pressurizing system **904** can be controlled by a processor **102**, which can control the light source **104**, optionally under control from a signal source **124**, such as a sensor of the types mentioned above.

[0221] Referring to **FIG. 10**, a digital mirror **1002** may serve as an optical facility **130**. The digital mirror reflects light from the light source **104**. The digital mirror is optionally under control of a processor **102**, which governs the reflective properties of the digital mirror. The processor **102** optionally controls the light source **104** and is optionally responsive to a signal **122** from a source **124**, such as a sensor. Thus, the processor **102** facilitates coordination of the light generated from the light source **104** with the reflective properties of the digital mirror **1002**. Any known digital mirror technology can be used, such as the DMD/DLP digital mirror commercially available from Texas Instruments.

[0222] Referring to **FIG. 11**, a spinning mirror system **1102** may serve as an optical facility **130**. As in other embodiments, the spinning mirror system is responsive to the control of a processor **102**, which may be integrated with it or separate. The processor optionally controls the light source **104**, which generates light that is reflected by the spinning mirror system **1102**. The processor is optionally responsive to a signal source **124**, and receives a signal **122**, such as from a sensor **124**. In embodiments the sensor **124** senses lighting conditions, allowing a closed loop feedback to the processor **102** to control both the light source **104** and the spinning mirror system **1102** in a coordinated way to generate optimum conditions of light reflected from the spinning mirror system. Spinning mirror systems are known features of many other industrial or commercial systems, such as bar code scanners and 3D terrain scanners. They can be used to direct and control a beam of light in a desired direction. Combined with the ability to precisely control the timing of light generated from the light source **104** under control of the processor **102**, the combination of the light source **104** and the spinning mirror system **1102** allows improved control of the direction of a beam of light, such as to spread the beam over a larger area, to change colors, and to "draw" shapes of varying patterns.

[0223] The spinning mirror system **1102** of **FIG. 11**, and the digital mirror system **1002** of **FIG. 10** are examples of devices designed to steer beams of light. Many such devices are known to those of skill in the optical arts, and any such devices are intended to be encompassed herein.

[0224] Referring to **FIG. 12**, a grating light valve (GLV) **1202** may serve as an optical facility **130** in the lighting unit **100** of **FIG. 1**. The grating light valve **1202** can receive light from a light source **104** (not shown) under control of a processor **102** (not shown). GLV uses micro-electromechanical systems (MEMS) technology and optical physics to vary how light is reflected from each of multiple ribbon-like structures **1204**, **1208** that represent a particular "image point" or pixel. The ribbons can move a tiny distance, such

as between an initial state **1204** and a depressed state **1208** as seen in **FIG. 12**. When the ribbons move, they change the wavelength of reflected light. Grayscale tones can also be achieved by varying the speed at which given pixels are switched on and off. The resulting image can be projected in a wide variety of environments, such as a large arena with a bright light source or on a small device using low power light sources. In the GLV, picture elements (pixels) are formed on the surface of a silicon chip and become the source for projection.

[**0225**] Additional information about GLV techniques can be found in "Diffractive Optical MEMs Use Grating Light Valve Technique," by Christopher Gudeman, Electrical Engineering Times, Mar. 18, 2002, which is herein incorporated by reference.

[**0226**] Referring still to **FIG. 12**, the GLV **1202** is a spatial light modulator. The GLV **1202** consists of an array of parallel micro-ribbons suspended above an air gap **1210**. The GLV **1202** is configured so the ribbons can be actuated between different states. The ribbons **1204**, **1208** are under high tension so that they remain tight when not actuated. The top layer of the ribbon is typically a metal, such as aluminum, which serves as both the reflective layer for light and as an electrode for electrostatic actuation. When a voltage is applied to the ribbon, electrostatic attraction deflects the ribbon downward to a state such as the ribbon **1208** in **FIG. 12**. The sub-layers of the ribbon can be a set of layers of materials such as stoichiometric Si3N4 and SiO2 films that provide a restoration force like a spring that balances the electrostatic force and provides stiffness and stress balance so the ribbon remains flat across its width. In embodiments, ribbons are about 500 mm long, 10 mm wide, 300 nm thick and closely spaced, such as with a gap of less than 0.5 mm.

[**0227**] A GLV **1202** can have alternate "active" ribbons and "bias" ribbons. The bias ribbons can have a single common control connection and can be held at ground potential, the same as the bottom electrode **1212**. Individual electrical connections to each active ribbon electrode can provide for independent actuation.

[**0228**] When the voltage of the active ribbons is set to ground potential, all ribbons are undeflected, and the device acts as a mirror. As the voltage to an active ribbon is increased, this region of the array begins to diffract light, thus attenuating the light that is reflected specularly.

[**0229**] In embodiments of a GLV **1202**, the ribbons are replicated several thousand times to form a one-dimensional array of diffracting elements. In embodiments, the diffraction elements are seamless, with no spaces between elements.

[**0230**] Referring to **FIG. 13**, an acousto-optical modulator **1302** may serve as an optical facility **130**. Also known as a tunable filter and as a Bragg cell, the acousto-optical modulator **1302** consists of a crystal that is designed to receive acoustic waves generated, for example, by a transducer **1304**, such as a piezoelectric transducer **1304**. The acoustic standing waves produce index of refraction changes in the crystal, essentially due to a Doppler shift, so that the crystal serves as a tunable diffraction grating. Incident light **1308**, such as from a light source **104**, is reflected in the crystal by varying degrees, depending on the wavelength of the acoustic standing waves induced by the transducer **1304**. The transducer **1304** can be responsive to a processor **102**, such as to convert a signal of any type into an acoustic signal that is sent through the crystal. Thus, the modulator **1302** can coordinate effects with changes in the light from the light source **104**.

[**0231**] Referring to **FIG. 14**, an illumination system **1400** is designed to reflect light from light source **104** onto an object **1404**. The object **1404** might be an object to be viewed under a machine vision system, such as an object on which a bar code is to be read, a semiconductor element to be placed on a circuit board, or the like. In machine vision systems and other systems where objects are lit, it can be desirable to provide illumination from a wide variety of beam angles, rather than from one or a small number of beam angles. Providing many beam angles reduces harsh reflections and provides a smoother view of an object. A system for producing such beam angles can be seen in **FIG. 14**. In **FIG. 14**, a reflective surface **1402** is provided for reflecting light from a light source **104** to the object **1404**. The reflective surface **1402** is substantially parabolic, so that light from the light source **104** is reflected substantially to the object **1404**, regardless of the angle at which it hits the reflective surface **1402** from the light source **104**. The surface could be treated to a mirror surface, or to a matte Lambertian surface that reflects light substantially equally in all directions. As a result, the object **1404** is lit from many different angles, making it visible without harsh reflections. The object **1404** may optionally be viewed by a camera **1412**, which may optionally be part of or in operative connection with a vision system **1414**. The camera may view the object through a space **1418** in the reflective surface **1402**, such as located along an axis of viewing **1410** from above the object. The object **1404** may rest on a platform **1408**, which may be a moving platform **1408**. The platform **1408**, light source **104**, vision system **1414** and camera **1412** may each be under control of a processor **102**, so that the viewing of the object and the illumination of the object may be coordinated, such as to view the object under different colors of illumination. A system such as that depicted in **FIG. 14** can produce continuous diffuse illumination. Such systems can be seen in patents issued to Tim White, such as U.S. Pat. No. 5,604,550, issued Feb. 18, 1997 and U.S. Pat. No. 6,059,421, issued May 9, 2000, which are incorporated by reference herein.

[**0232**] Referring to **FIG. 16**, optical facilities **130**A and **130**B are provided for shaping and forming incident light **1608**. Provided is a light pipe **1602** that reflects light to produce a particular pattern of light at the output end. A different shape of light pipe **1604** produces a different pattern. In general, such secondary optics, whether imaging or non-imaging, and made of plastic, glass, mirrors or other materials, can be added to a lighting unit **100** to shape and form the light emission. Such [an] optical facilities **130**A and **130**B can be used to spread, narrow, diffuse, diffract, refract or reflect the light in order that a different output property of the light is created. These can be fixed or variable. Examples can be light pipes, lenses, light guides and fibers and any other light transmitting materials, or a combination of any of these.

[**0233**] Referring to **FIG. 17**, a light pipe **1704** serves as an optical facility, delivering light from one or more lighting units **100** to an illuminated material **1702**. The lighting units **100** are optionally controlled by a central controller **202**,

which controls the lighting units **100** to send light of selected colors, color temperatures, intensities and the like into the interior of the light pipe **1704**. In other embodiments a central controller **202** is not required, such as in embodiments where the lighting units **100** include their own processor **102**. In embodiments one or more lighting units **100** may be equipped with a communications facility, such as a data port, receiver, transmitter, or the like. Such lighting units **100** may receive and transmit data, such as to and from other lighting units **100**. Thus, a chain of lighting units **100** in a light pipe may transmit not only light, but also data along the pipe **1704**, including data that sends control signals for the lighting units disposed in the pipe **1704**. The material **1702** can be any material, such as one chosen for illumination, including an object of any type. The central controller **202** can control the illumination sent through the pipe to illuminate based on a feature of the material **1702**. In embodiments the interior **1704** may be filled with a substantially light-transmissive material, such as a fluid, gel, polymer, gas, liquid, vapor, solid, crystal, fiber optic material, or other material. In embodiments the material may be a flexible material, so that the light pipe **1704** may be made flexible. The light pipe **1704** may be made of a flexible material or a rigid material, such as a plastic, rubber, a crystal, PVC, glass, a polymer, a metal, an alloy or other material.

[**0234**] Referring to **FIG. 18**, a color mixing system **1802** is provided for mixing color from a light source **104**. The color mixing system consists of two opposing truncated conical sections **1804**, **1808**, which meet at a boundary **1810**. Light from a light source **104** is delivered into the color mixing system and reflected from the interior surfaces of the two sections **1804**, **1808**. The reflections mix the light and produce a mixed light from the distal end of the color mixing system **1802**. U.S. Pat. No. 2,686,866 to Williams, incorporated by reference herein, shows a color mixing lighting apparatus utilizing two inverted cones to reflect and mix the light from multiple sources. By combining a color mixing system such as this with color changes from the light source **104**, a user can produce a wide variety of lighting effects.

[**0235**] Other color mixing systems can work well in conjunction with color changing light sources **104**. For example, U.S. Pat. No. 2,673,923 to Williams, also incorporated by reference herein, uses a series of lens plates for color mixing.

[**0236**] Referring to **FIG. 19**, an optical facility **130** is depicted comprising a plurality of cylindrical lens elements **1902**. These cylindrical elements diffract light from a light source **104**, producing a variety of patterns of different colors, based on the light from the light source **104**. The cylinders may be of a wide variety of sizes, ranging from microlens materials to conventional lenses.

[**0237**] Referring to **FIG. 20**, a microlens array **2002** is depicted as an optical facility **130**. The microlens array **2002** comprises a plurality of microscopic hexagonal lenses, aligned in a honeycomb configuration. Microlenses are optionally either refractive or diffractive, and can be as small as a few microns in diameter. Microlens arrays can be made using standard materials such as fused silica and silicon and newer materials such as Gallium Phosphide, making possible a very wide variety of lenses. Microlenses can be made on one side of a material or with lenses on both sides of a substrate aligned to within as little as one micron. Surface roughness values of 20 to 80 angstroms RMS are typical, and the addition of various coatings can produce optics with very high transmission rates. The microlens array **2002** can refract or diffract light from a light source **104** to produce a variety of effects.

[**0238**] Referring to **FIG. 21**, another microlens array **2102** comprises a plurality of substantially circular lens elements. Again, the array **2102** can be constructed of conventional materials such as silica, with lens diameters on the range of a few microns. The array **2102** can operate on light from a light source **104** to produce a variety of colors and optical effects.

[**0239**] Referring to **FIG. 22**, a microlens array is disposed in a flexible material **2202**, so that the optical facility **130** can be configured by bending and shaping the material that includes the array.

[**0240**] Referring to **FIG. 23**, a flexible material microlens array **2302** is rolled to form a cylindrical shape for receiving light from a light source **104**. The configuration could be used, for example, as a light-transmissive lamp shade with a unique appearance.

[**0241**] Referring to **FIG. 24**, a system can be provided to roll a microlens array **2402** about an axis **2408**. A drive mechanism **2404** can roll or unroll the flexible array **2402** under control of a controller **2412**. The controller can also control a lighting unit **100** (e.g., see the configuration of **FIG. 2** and central controller **202**), so that the array **2402** is disposed in front of the lighting unit **100** or rolled away from it, as selected by the user. A substantially rigid member **2410** can provide tensile strength to the edge of the flexible material **2402**, making it easier to roll the flexible array **2402** as driven by the drive mechanism **2404**. The system can be used to alternately offer direct light from the lighting unit **100** or light that is altered by the operation of the array **2402**.—

[**0242**] Referring to **FIG. 25**, a chromaticity chart **2500** represents colors from the 3D color space of human visual perception. Because it is a 2D chart, the diagram **2500** represents only two of the axes: hue and saturation. The form of the chart **2500** is derived from the tri-stimulus values, which are based on measurements of human visual perception. The outer horseshoe curve **2502** is a pure spectral line representing pure wavelengths of color or hue ranging from around 400 nm wavelengths to 700 nm. The line **2504** is the 'purple line' that joins the ends of the spectral curve. No spectral wavelength stimulates these colors in the eye.

[**0243**] All colors that humans perceive fall inside the area defined by the spectral line **2502** and purple line **2504**. Given any two source colors, all of the colors that can be made by blending those colors in different amounts will fall on the line that connects them. Binary complementary white for example can be made by two sources C**12506** and C**22508** in the diagram **2500** which, in appropriate amounts can form C**32510**.

[**0244**] An extension of this to three colors broadens the gamut of colors considerably. Points **2512**, **2514**, and **2516** for example form a red, green and blue (RGB) gamut. The three points are the primary colors of the system. The colors inside the triangle represent the color gamut, the colors that

can be generated by the system. The exact primary colors are carefully selected to typically give a large gamut.

[0245] The outer spectral line **2502** represents the highest degree of purity possible for a color. Moving toward the middle of the area or gamut colors become less saturated; essentially this is adding white to the colors.

[0246] A good quality white light, however, is also defined by a color rendering index (CRI) which matches a light source to a palette of colors and provides a weighting across a spectrum of color. An RGB triad of colors typically produces a low CRI, but through the use of white LEDs and phosphors the CRI can be improved greatly. By offering control of different sources, a white lighting unit **100** can move along the black body curve, **2518**, generating different color temperatures of white light.

[0247] **FIG. 26** depicts an airplane environment **2604** for a lighting system of the various embodiments described herein. One or more lighting units **100** can be disposed in the interior cabin **2602** or on the exterior to produce color-changing illumination. Further details are described in the applications incorporated by reference herein.

[0248] **FIG. 27** depicts an airplane interior **2602** with a plurality of lighting units **100**. The lighting units can be used on the interior ceiling **2714** or along the floor **2712**, such as being used as directional lights **2704**. The lights can be used to light the seating environment **2710**. In embodiments, lighting units **100** can alternatively provide white light illumination or colored light illumination to the environment **2602**, such as under the control of a central controller **202** as described in connection with **FIG. 2**. In embodiments the lighting can be controlled in coordination with other computer systems, such as the airplane's primary computer system. The lighting units **100** can thus be used to provide aesthetic lighting, alarm lighting, safety lighting, lighting entertainment, indication of conditions or data, or many other purposes. In embodiments the lights can change color and color temperature to mimic the daylight cycle, offering a variety of conditions based on time of day.

[0249] **FIG. 28** depicts the interior of a vehicle, such as a bus **2800**. Lighting units **100** can be disposed along the ceiling **2802**, above seats **2808**, or along the aisle **2804**, to provide a variety of illumination effects, ranging from white light illumination or varying color temperatures to colored lighting for aesthetic, indication, safety, data, warning, entertainment or other purposes. In each case the lights can have separate controllers or can be governed by a central controller **202**, which may optionally be made part of the control system for the vehicle **2800**. **FIG. 29** depicts a system **2902** for lighting an object **2904** to be displayed. Lighting units **100** can light the object **2904**, such as under control of a processor **102**. In embodiments the processor **102** may be integrated with another computer system, such as a conventional lighting system, or a computer system for controlling an environment, such as a safety system, a heating or cooling system, a security system, or the like. The lighting units **100** for lighting the object can include elements for producing both multi-colored light and white light, such as described in connection with **FIG. 3**. Thus, the lighting systems can light the object **2904** with conventional white light (including of selected color temperatures) as well as with non-white light (such as to produce aesthetic effects, to provide a warning, to provide an indication of a condition, or the like).

[0250] One such environment **2902** where objects are displayed is a retail environment. The object **2904** might be an item of goods to be sold, such as apparel, accessories, electronics, toys, food, or any other retail item. The lighting units **100** can be controlled to light the object **2904** with a desired form of lighting. For example, the right color temperature of white light can render the item in a true color, such as the color that it will appear in daylight. This may be desirable for food items or for apparel items, where color is very significant. In other cases, the lighting units **100** can light the item with a particular color, to draw attention to the items, such as by flashing, by washing the item with a chasing rainbow, or by lighting the item with a distinctive color. In other cases the lighting can indicate data, such as rendering items that are on sale in a particular color, such as green. The lighting can be controlled by a central controller, so that different items are lit in different colors and color temperatures along any timeline selected by the user. Lighting systems can also interact with other computer systems, such as cards or handheld devices of a user. For example, a light can react to a signal from a user's handheld device, to indicate that the particular user is entitled to a discount on the object **2904** that is lit in a particular color when the user is in proximity. The lighting units **100** can be combined with various sensors that produce a signal source **124**. For example, an object **2904** may be lit differently if the system detects proximity of a shopper.

[0251] Objects **2904** to be displayed under controlled lighting conditions also appear in other environments, such as entertainment environments, museums, galleries, libraries, homes, workplaces, and the like.

[0252] Referring to **FIG. 30**, lighting units **100** can be configured to light a sign **3000**. In embodiments the sign **3000** can be made of light-transmissive materials, such as disclosed in connection with **FIG. 17**. Thus, a sign **3000** can glow with light from the lighting units **100**, similar to the way a neon light glows. The sign **3000** can be configured in letters, symbols, numbers, or other configurations, either by constructing it that way, or by providing sub-elements that are fit together to form the desired configuration. The light from the lighting units **100** can be white light, other colors of light, or light of varying color temperatures. In an embodiment the sign **3000** can be made from a kit that includes various sub-elements, such as curved elements, straight elements, "T" junctions, "V-" and "U-" shaped elements, and the like.

[0253] Referring to **FIG. 31**, a sign **3000** can be disposed on the exterior of a building **3100**. Such a sign **3000** can be displayed many other places, such as inside a building, on a floor, wall, or ceiling, in a corridor, underwater, submerged in a liquid other than water, or in many other environments.

[0254] Referring to **FIG. 32**, a sign **3200** can comprise of a backlit display portion **3202** and a configuration **3204**, such as of letters, numbers, logos, pictures, or the like. The lighting of the backlit portion **3202** and the configuration **3204** can be coordinated to provide contrasting colors and various aesthetic effects.

[0255] Referring to **FIG. 33**, a medical environment is depicted in which a health care provider **3300** provides health care services to a patient **3302** under a lighting system **3308** that includes a plurality of lighting units **100**. The lighting units **100** can produce white light, such as white

light of a selected color temperature, as well as colored light. In embodiments, the lighting system **3308** can provide both white and non-white light under control of a processor **202**. The processor **202** can be part of another lighting system, such as the lighting system for an operating theatre, emergency room, or other medical environment. The lighting system **3308** can be used to provide controlled light to the area of the patient **3302**. Control of the light can be by direct control or by remote control. The health care provider **3300** or other operator can control the light system **3308** to provide exactly the desired lighting conditions. For example, a surgeon may have strong preferences for a given color or color or color temperature of light, while another surgeon may have different preferences. The system **3308** allows each one to select a preferred color and color temperature. Also, during a procedure, such as a surgery, it may be desirable to change the lighting conditions. For example, an artery, being red, will appear more vivid under red light, while a vein would appear more vivid under blue light. Accordingly, depending on the particular system being viewed, the health care provider may change the light to fit the circumstances. Other medical applications may also benefit from changing lighting conditions under control; for example, a provider may wish to view an x-ray, chart, graph, picture, or other test result under ideal illumination conditions, or to view a patient under such conditions, such as to observe skin color or the like.

[**0256**] Referring to **FIG. 34**, a lighting system **3400** with lighting units **100** under control of a processor **202** is used to light an object of art **3402**. In environments where art is displayed, such as museums, galleries, homes, workplaces, theatres and the like, it may be desirable to show an object under a selected color temperature of white light, which is allowed by the lighting units **100**. However, the ideal color and color temperature may vary according to the time of day, the ambient lighting conditions, the object being viewed, and the preferences of the viewer. Thus, it is preferable to allow for control of the color and color temperature, to produce ideal viewing conditions. In embodiments, the lighting system **3400** is integrated with another computer system, such as the lighting system for the environment, a security system, an alarm system, or the like, so that a caretaker for the environment can provide the desired lighting conditions for each object **3402**, across various timelines. In embodiments the art object **3402** may be designed to take advantage of color changes, such as by including various different colors that emerge or recede depending on the color of light illuminating them from the lighting system **3400**. Thus, the art object **3402** can be dynamic, based on the lighting from the lighting units **100**, and the dynamic aspect of the object **3402** can be part of the design of the art object **3402**.

[**0257**] Referring to **FIG. 35**, an object **3502** is lit by a lighting system **3402**. In this case the object **3502** is a three-dimensional object. The object **3502** can also be lit internally, to provide its own illumination. Thus, the object **3502** can include color and color temperature of light as a medium, which can interact with changes in color and color temperature from the lighting system **3402**.

[**0258**] **FIG. 36** depicts a foreground object **3602** and a background **3604**, both with lighting units **100**. Thus, both the foreground object **3602** and the background **3604** can be illuminated in various colors, intensities or color temperatures. In an embodiment, the illumination of the foreground object **3602** and the background **3604** can be coordinated by a processor **102**, such as to produce complementary illumination. For example, the colors of the two can be coordinated so that the color of the background **3604** is a complementary color to the color of the foreground object **3602**, so when the background **3604** is red, the foreground object **3602** is green, etc. Any object **3602** in any environment can serve as a foreground object **3602**. For example, it might be an item of goods in a retail environment, an art object in a display environment, an emergency object in a safety environment, a tool in a working environment, or the like. For example, if a processor **102** is part of a safety system, the object **3602** could be a fire extinguisher, and the background **3604** could be the case that holds the extinguisher, so that the extinguisher is illuminated upon a fire alert to make it maximally noticeable to a user. Similarly, by managing the contrast between the background **3604** and the object **3602**, an operator of a retail environment can call attention to the object **3602** to encourage purchasing.

[**0259**] **FIG. 37** depicts a person **3704** in a seat **3708** under a lighting system **3702** that has a processor **3710**. The seat **3708** is positioned to allow illumination of the person **3704** by the lighting system **3702**, which can contain lighting units **100** to provide color-controlled illumination, including white, as well as non-white illumination of varying intensity and color temperatures. The seat **3708** could be any type of seat in any environment, such as a barber's chair, a beauty shop chair, a dental chair, a chair in a retail shop, a health care chair, a theatre seat, a transportation seat, an airline seat, a car seat, a bus seat, or the like. Under control of the processor **3710**, the lighting system **3702** can light the seat **3708** and the area of the person **3704** as desired by the operator of the system **3702**, which may be the person **3704** or another person. For example, a dentist can adjust the color or color temperature of light to provide an accurate rendition of the appearance of the mouth of the user, such as to show tooth color as it will appear under sunlight. Similarly, a beauty shop operator or barber can show hair color, makeup color, or the like, as those features will appear in various lighting environments, ranging from sunlight to indoor environments. The operator of a seating environment for an entertainment venue, such as a movie theatre, playhouse, airline seat, other transportation seat, or the like, can produce light shows with the system **3702**, on any desired timeline, including in coordination with other entertainment, such as music, television programming, movies, video games, or the like. Thus, the methods and systems described throughout this specification can be applied more generally to provide lighting to a seating environment with a seat **3708**.

[**0260**] **FIG. 38** depicts a lighting system **3802** with lighting units **100** in the environment of a cabinet **3804**. In one preferred embodiment, a linear cabinet lighting system **3802** provides both white and non-white colored lighting under control of a controller **202** as shown in **FIG. 2**, for example. The environment optionally contains a surface **3808** below the cabinet **3804**, such as a counter or workspace. The cabinet **3802** can have doors, or it could be an open cabinet **3802**, such as with shelves. It is often desirable to have under-cabinet lighting, to light a surface or workspace. Depending on the environment, it may be desirable to have a lighting system **3802** designed to illuminate the under-cabinet region with light of varying color, color temperature, intensity and saturation, such as lighting of both white and

non-white colors. Lighting systems of varying configurations can be used, such as a linear lighting system **3802**, a curvilinear system, or lights of various configurations, such as described in connection with **FIG. 3**. In embodiments, the lighting system **3802** can be designed with a low profile, to minimize incursion in the under-cabinet area. In other embodiments, the surface **3808** can be configured, designed, or modified to interact with the lighting system **3802**, such as to highlight color changes, such as by including thereon patterns that animate in the presence of color changes.

[0261] **FIG. 39** depicts using an under-cabinet lighting system **3802** such as described in connection with **FIG. 38** to light an object **3902** in a cabinet environment. The object **3902** may be any object that benefits from controlled lighting, such as a work-piece, display, appliance, tool, food, or the like. The illumination from the lighting system **3802** can be configured to be suitable to illuminate that object **3902**, based on a feature of the object, such as its material, pattern, or other characteristic.

[0262] **FIG. 40** depicts a lighting system for a workplace environment **4000**. The environment can include one or more lighting systems **4002**, **4004**. For example, a first lighting system **4002** may consist of one or more lighting units **100** in a substantially horizontal line. A second lighting system **4004** might consist of lighting units **100** in a substantially vertical configuration. The lighting systems **4002**, **4004** can be used to light the environment **4000**, such as a desk, cubicle, office, workbench, laboratory bench, or similar workplace environment. The lighting systems **4002**, **4004** can provide white and non-white color illumination of various colors, color temperatures, and intensities, so that the systems **4002**, **4004** can be used for conventional illumination as well as for aesthetic, entertainment, or utilitarian effects, such as illuminating workplace objects with preferred illumination conditions, such as for analysis or inspection, presenting light shows or other entertainment effects, or indicating data or status. For example, coupled with a signal source **124**, such as a sensor, the workplace lighting systems **4002**, **4004** could illuminate in a given color or intensity to indicate a data condition, such as speed of a factory line, size of a stock portfolio, outside temperature, presence of a person in an office, whether someone is available to meet, or the like.

[0263] **FIG. 41** depicts a lighting system for a seating environment **4100**. The seating environment could be a theatre, home theatre, movie theatre, transportation environment, or other environment where individuals are seated in a group. A lighting system **4102** can light the environment **4100** with white and non-white color illumination of various colors, color temperatures, and intensities, to produce aesthetic, entertainment and utilitarian effects, such as to complement an entertainment presentation, to indicate a data condition (such as presence of an alarm) or the like. The lighting system **4102** can be above the seats, or elsewhere in the environment **4100**, such as along a floor **4104**.

[0264] **FIG. 42** depicts a lighting system for another entertainment environment **4200**. A seat **4204** is placed in proximity to a display **4202**. The seat could be a home entertainment seat, such as a couch or recliner, or an airline seat, other transportation seat, movie or theatre seat, video game console seat, or other entertainment seat **4204**. The display could be a television, video projector screen, work of art, liquid crystal display, plasma screen display, movie theatre screen, or other display **4202**. A lighting system **4208** with lighting units **100** can supply white and non-white color illumination of various colors, color temperatures, and intensities, to produce aesthetic, entertainment and utilitarian effects, such as a colored light show to complement entertainment presentations on the display **4202**, while also supplying ambient lighting, such as white light of selected color temperatures. Like other systems described herein, the lighting system **4208** can be used to indicate a data condition, such as an upcoming time of day, an upcoming program, the ringing of a phone, or the like.

[0265] **FIG. 43** depicts a lighting system **4304** in an environment with a camera **4302**. The lighting system **4304** can be an array of lighting units **100**, or could be a single lighting unit **100**, such as a flash attachment for the camera **4302**. The lighting units **100** and lighting system **4304** can include a central controller **202**, for providing color, color temperature, saturation and intensity control of white and non-white light to the lighting units **100**, such as to illuminate the environment or an object in the environment. The controller **202** can control the illumination in conjunction with controlling the camera **4302**, such as to coordinate the illumination with settings of the camera **4302**. In embodiments, the camera **4302** may be a smart camera with processing functions linked to a vision system, so that the lighting system **4304** is controlled in response to processing of images by the vision system. That is, the camera **4302** can serve as a signal source **124** to generate a lighting control signal for the lighting system **4304**. The lighting can thus be coordinated to be appropriate for the object being filmed or recorded by the camera. The camera **4302** could be a film camera, a digital camera, a video camera, a still camera, a motion picture camera, or other camera of any type. In a preferred embodiment, the camera **4302** is a motion picture camera under coordinated control by a user who simultaneously controls via the controller **202** the camera's exposure characteristics and the lighting conditions generated by the lighting system **4304**. In another embodiment the camera **4304** is a projector, and the lighting system **4304** serves as a projector lamp, as well as an illumination system for generating controlled lighting conditions.

[0266] The methods and systems disclosed herein also include a variety of methods and systems for light control, including central controllers **202** as well as lighting unit controllers **208**. One grouping of lighting controls includes dimmer controls, including both wired and wireless dimmer control. Traditional dimmers can be used with lighting units **100**, not just in the traditional way using voltage control or resistive load, but rather by using a processor **102** to scale and control output by interpreting the levels of voltage. In combination with a style and interface that is familiar to most people because of the ubiquity of dimmer switches, one aspect of the present specification allows the position of a dimmer switch (linear or rotary) to indicate color temperature or intensity through a power cycle control. That is, the mode can change with each on or off cycle. A special switch can allow multiple modes without having to turn off the lights. An example of a product that uses this technique is the Color Dial, available from Color Kinetics.

[0267] Referring to **FIG. 44**, a controller **202** includes a slide **4402** and a switch **4404**. The slide can provide voltage input to a lighting unit **100**, and the switch **4404** can allow

the user to switch between modes of operation, such as by selecting a color wash, a specific color or color temperature, a flashing series of colors, or the like.

[0268] **FIG. 45** depicts a controller **202** with two slides **4502**, **4504** and a switch **4508**. The slides allow multiple dimensions of control, and the switch allows the user to switch modes of operation. For example, one slide **4502** could control intensity, while the other **4504** controls color temperature. The switch **4508** can control modes of operation. In various embodiments the slides **4502**, **4504** and switch **4508** could be used to control a wide range of variables, such as color, color temperature, intensity, hue, and triggering of lighting shows of varying attributes.

[0269] **FIG. 46** shows a dial **4602** that can serve as a controller **202** for a lighting unit **100**. The dial **4602** can allow a user to adjust a variable, such as color, color temperature, intensity, or the like. The dial **4602** can include a switch mechanism (actuated by pushing the dial **4602**), to switch between modes of control, such as to facilitate a variety of light shows.

[0270] **FIG. 47** shows a controller **202** with two dials **4702**, **4704**. The dials **4702**, **4704** can each have switches to actuate different modes, such as by pushing the dials **4702**, **4704**. The dials **4702**, **4704** can control any of a wide variety of variables, such as voltage, color, color temperature, intensity, saturation or other attributes of one or more lighting units **100**.

[0271] **FIG. 48** shows a system **4800** for controlling a plurality of lighting units **100** in a home network. A home network controller **4802** delivers control signals through a network **4804** (which may be a conventional network, a wire, a power line, a wireless network or other data facility). Each lighting unit **100** is responsive to a lighting unit controller **208**A, **208**B, **208**C, **208**D to provide illumination changes in response to signals from the home network controller **4802**. Examples of home network controllers include a centralized control system **4802** to control lighting units **100**. Other examples include Lutron's RadioRA and the like, as well as distributed control systems like LiteTouch's HomeTouch system.

[0272] Referring to **FIG. 49**, a switch **4902** includes a processor **102**, memory **114** and a communications facility **120**. The switch **4902** can be linked to a network, such as an office network, Internet, or home network **4804**. Each switch **4902** (which can appear in various forms such as those depicted in **FIGS. 44-47**) can be an intelligent device that responds to communication signals via the communications facility **120** to provide control of any lighting units **100** from any location where another switch **4902** or device may be located. Such a switch **4902** can be integrated through smart interfaces and networks to trigger shows (such as using a lighting control player, such as iPlayer 2 available from Color Kinetics) as with a lighting controller such as a ColorDial from Color Kinetics. Thus, the switch **4902** can be programmed with light shows to create various aesthetic, utilitarian or entertainment effects, of white or non-white colors. In embodiments, an operator of a system **4800** can process, create or download shows, including from an external source such as the Internet. Shows can be sent to the switch over a communication facility **120** of any kind. Various switches **4902** can be programmed to play back and control any given lighting unit **100**. In embodiments, settings can be controlled through a network **4804** or other interface, such as a web interface.

[0273] A switch **4902** with a processor **102** and memory **114** can be used to enable upgradeable lighting units **100**. Thus, lighting units **100** with different capabilities, shows, or features can be supplied, allowing users to upgrade to different capabilities, as with different versions of commercial software programs. Upgrade possibilities include firmware to add features, fix bugs, improve performance, change protocols, add capability and compatibility and many others.

[0274] Referring to **FIG. 50**, a flow diagram **5000** shows steps for delivering a control signal to a lighting unit **100** based on stored modes and a power cycle event. At a step **5002**, the operator can store modes for lighting control, such as on a memory **114**. The system can then look, at a step **5004**, for a power event, such as turning the power on or off. If there is no power event at the step **5004**, then the system waits at a step **5006** for such an event. When there is a power event at the step **5004**, then at a step **5008** the system changes mode. The mode can be a resting mode, with no signal to the lighting unit **100**, or it can be any of a variety of different modes, such as a steady color change, a flashing mode, a fixed color mode, or modes of different intensity. Modes can include white and non-white illumination modes. The modes can be configured in a cycle, so that upon a mode change at the step **5008**, the next stored mode is retrieved from memory **114** and signals for that mode are delivered to the lighting control unit **5008**. In embodiments, such as using a switch, such as the switch **4902** or another switch such as a switch, slide, dial, or dimmer described in connection with **FIGS. 44-47**. The system can, at a step **5010**, take an input signal, such as from the switch. Depending on the current mode, the input signal from the switch **4902** can be used to generate a different control signal at a step **5012**. For example, if the mode is a steady color change, the input from the dimmer could accelerate of decelerate the rate of change. If the mode were a single color, then the dimmer signal could change the mode by increasing or decreasing the intensity of light. Of course, the step **5012** could take multiple inputs from multiple switches, dials, dimmers, sliders or the like, to provide more modulation of the different modes. Finally, at a step **5014**, the modulated signal can be sent to the lighting unit **100**.

[0275] Referring to **FIG. 51**, a flow diagram **5100** illustrates steps for generating a lighting control signal. At a step **5104** the system can store modes, such as in memory **114**. Then at a step **5108** the system can take input, such as from a signal source **124**, such as a sensor, a computer, or other signal source. At a step **5110** the system can determine the mode of the system **5110**, such as based on a cycle of modes, or by recalling modes from memory, including based on the nature of the signal from the signal source **124**. Then at a step **5112** the system can generate a control signal for a lighting unit, based on the mode determined at the previous step. Finally, at a step **5114**, the system can deliver a control signal to the lighting unit **100**.

[0276] **FIG. 52** depicts an embodiment of a lighting system **5200** that includes a central controller **202**, a communications facility **204**, such as a bus, wire, network, power line or circuit, for delivering signals from the controller **202** to a lighting unit controller **208**A, **208**B, **208**C or **208**D, and lighting units **100** that respond to the signals by

providing illumination, such as white or non-white illumination of varying colors, color temperatures, intensities and the like. **FIG. 52** also depicts a connection of the central controller **202** to a network, such as the Internet **5202**. It should be noted that an individual lighting unit controller **208**A, **208**B, **208**C, **208**D could also be connected directly to the computer network **5202**. Thus, the central is controller **202** or individual lighting unit controller **208**A, **208**B, **208**C, **208**D could each obtain lighting control signals from an external source, such as an operator connected to the Internet **5202**.

[**0277**] In other embodiments of the present invention it may be desirable to limit user control. Lighting designers, interior decorators and architects often prefer to create a certain look to their environment and wish to have it remain that way over time. Unfortunately, over time, the maintenance of an environment, which includes light bulb replacement, often means that a lighting unit, such as a bulb, is selected whose properties differ from the original design. This may include differing wattages, color temperatures, spectral properties, or other characteristics. It is desirable to have facilities for improving the designer's control over future lighting of an environment.

[**0278**] Referring to **FIG. 53 a** lighting unit **100** includes a dial **5302** that allows a user to select one or more colors or color temperatures from a scale **5304**. For example, the scale could include different color temperatures of white light. The lighting designer can specify use of a particular color temperature of light, which the installer can select by setting the right position on the scale **5304** with the dial.

[**0279**] **FIG. 54** shows a slide mechanism **5402** that can be used like the dial of **FIG. 53** to set a particular color temperature of white light, or to select a particular color of non-white light, in either case on a scale **5304**. Again, the designer can specify a particular setting, and the installer can set it according to the design plan. Providing adjustable lighting units **100** offers designers and installers much greater control over the correct maintenance of the lighting of the environment.

[**0280**] **FIG. 55** shows a lighting unit **100** with a data port **5502** for receiving a data cable, such as a standard CAT 5 cable type used for networking. Thus, the lighting unit **100** can receive data, such as from a network. By allowing connection of the lighting unit **100** to a communications facility **120**, the system allows a lighting designer or installer to send data to a plurality of lighting units **100** to put them in common modes of control and illumination, providing more consistency to the lighting of the overall environment.

[**0281**] **FIG. 56** shows a socket **5602** or fixture for receiving a lighting unit **100**. In this case the socket **5602** includes a processor **102**, such as to providing control signals to the lighting unit **100**. The socket **5602** can be connected to a communications facility **120**, **108**, so that it can receive signals, such as from a controller **202**. Thus, the socket **5602** can serve as a lighting unit controller. By placing control in the socket **5602**, it is possible for a lighting designer or installer to provide control signals to a known location, regardless of what bulbs are removed or replaced into the socket **5602**. Thus, an environmental lighting system can be arranged by the sockets **5602**, then any different lighting units **100** can be installed, responsive to control signals sent to the respective sockets **5602**. Sockets **5602** can be configured to receive any kind of light bulb, including incandescent, fluorescent, halogen, metal halide, LED-based lights, or the like. Thus, intelligence can be provided by the processor **102** to a conventional socket. In embodiments, data can be provided over power lines, thus avoiding the need to rewire the environment, using power line carrier techniques as known in the art, the X10 system being one such example, and the HomeTouch system being another.

[**0282**] In the preceding embodiments, a fixture or network can give a lighting unit **100** a command to set to a particular look including, color, color temperature, intensity, saturation, and spectral properties. Thus, when the designer sets the original design he or she may specify a set of particular light bulb parameters so that when a lighting unit **100** is replaced the fixture or network can perform a startup routine that initializes that lighting unit **100** to a particular set of values which are then controlled. In embodiments, the lighting unit **100** identifies itself to the network when the power is turned on. The lighting unit **100** or fixture or socket **5602** can be assigned an address by the central controller **202**, via a communications facility **120**. Thus, there is an address associated with the fixture or socket **5602**, and the lighting unit **100** control corresponds to that address. The lighting unit **100** parameters can be set in memory **114**, residing in either the lighting unit **100**, socket **5602** or fixture, cable termination or in a central controller **202**. The lighting unit **100** can now be set to those parameters. From then on, when the lighting unit **100** is powered up it receives a simple command value already set within the set of parameters chosen by the designer.

[**0283**] In embodiments, the fixture, socket **5602** or lighting unit **100** can command color setting at installation, either a new setting or a fine adjustment to provide precise color control. In embodiments, the lighting unit **100** allows color temperature control as described elsewhere. The lighting unit **100** is settable, but the fixture itself stores an instruction or value for the setting of a particular color temperature or color. Since the fixture is set, the designer or architect can insure that all settable lighting units **100** will be set correctly when they are installed or replaced. An addressable fixture can be accomplished through a cable connection where the distal end of the cable, at the fixture, has a value programmed or set. The value is set through storage in memory **114** or over the power lines. A physical connection can be made with a small handheld device, such as a Zapi available from Color Kinetics, to create and set the set of parameters for that fixture and others. If the environment changes over time, as for example during a remodeling, then those values can be updated and changed to reflect a new look for the environment. A person could either go from fixture to fixture to reset those values or change those parameters remotely to set an entire installation quickly. Once the area is remodeled or repainted, as in the lobby of a hotel for example, the color temperature or color can be reset and, for example, have all lighting units **100** in the lobby set to white light of 3500 K. Then, in the future, is any lighting unit **100** is replaced or upgraded, any bulb plugged in can be set to that new value. Changes to the installation parameters can be done in various ways, such as by network commands, or wireless communication, such as RF or IR communication.

[**0284**] In various embodiments, the setting can occur in the fixture or socket **5602**, in the distal end of a cable, in the proximal end of the cable, or in a central controller. The

setting can be a piece of memory **114** embedded in any of those elements with a facility for reading out the data upon startup of the lighting unit **100**.

[**0285**] Referring to **FIG. 57**, in other embodiments it may be desirable to prevent or deter user adjustment. A lighting unit **100** can be programmed to allow adjustment and changes to parameters by a lighting designer or installer, but not by other users. Such systems can incorporate a lockout facility to prevent others from easily changing the settings. This can take the form of memory **114** to store the current state but allow only a password-enabled user to make changes. One embodiment is a lighting unit **100** that is connected to a network or to a device that allows access to the lighting unit **100** or network. The device can be an authorized device whose initial communication establishes trust between two devices or between the device and network. This device can, once having established the connection, allow for the selection or modification of pattern, color, effect or relationship between other devices such as ambient sensors or external devices. **FIG. 57** is a flow diagram **5700** showing steps for only allowing authorized users to change lighting conditions from a lighting unit **100**. The system can store modes at a step **5702**, such as in memory **114**. The system can detect a user event **5704**, such as an attempt by the user to change modes, such as sending an instruction over a network or wireless device. At a step **5708**, the system queries whether the user is authorized to change the mode of the lighting unit **100**, such as by asking for a password, searching for a stored password, or checking a device identifier for the device through which the user is seeking to change the mode of the lighting unit **100**. If the user is not authorized at the step **5708**, then the system maintains the previous mode at a step **5710** an optionally notifies the lighting designer, installer, or other individual of the unauthorized attempt to change the mode. If the user is authorized at the step **5708**, then the user is allowed to change the mode at the step **5714**. Facilities for allowing only authorized users to trigger events are widely known in the arts of computer programming, and any such facilities can be used with a processor **102** and memory **114** used with a lighting unit **100**.

[**0286**] In other embodiments, the lighting designer can specify changes in color over time or based on time of day or season of year. It is beneficial for a lighting unit **100** to measure the amount of time that it has been on and store information in a compact form as to its lighting history. This provides a useful history of the use of the light and can be correlated to use lifetime and power draw, among other measurements. An intelligent networked lighting unit **100** can store a wide variety of useful information about its own state over time and the environmental state of its surroundings. Referring to **FIG. 58**, a lighting unit can store a histogram **5800**, a chart representing value and time of lighting over time. The histogram can be stored in memory **114**. A histogram can chart on time versus off time for a lighting unit **100**. A histogram can be correlated to other data, such as room habitation, to develop models of patterns of use, which can then be tied into a central controller **202**, such as integrated with a building control system. While **FIG. 58** shows abruptly changing values, a histogram **5800** could also show smoothly changing values over time, such as sunrise to sunset transitions, etc.

[**0287**] In embodiments the lighting unit **100** can include a timing feature based on an astronomical clock, which stores not simply time of day, but also solar time (sunrise, sunset) and can be used to provide other time measurements such as lunar cycles, tidal patterns and other relative time events (harvest season, holidays, hunting season, fiddler crab season, etc.) In embodiments, using a timing facility, a controller **202** can store data relating to such time-based events and make adjustments to control signals based on them. For example, a lighting unit **100** can allow 'cool' color temperature in the summer and warm color temperatures in the winter.

[**0288**] Referring to **FIG. 61**, a flow diagram **6100** shows steps for applying a timing algorithm to generate a lighting control signal. At a step **6102** the system can store timing algorithms, such as in memory **114**. At a step **6104** the system can determine time, such as from timing facility like a system clock or other timing facility. At a step **6108** the system can retrieve the timing algorithm from memory. At a step **6110** the system can determine whether other data is required to execute the algorithm, such as data from a sensor or the like. If so, then at a step **6112** the system can fetch the other data. If at the step **6110** no other data is required, or once other necessary data is obtained, then at a step **6114** the system applies the algorithm, either to the timing data alone or, if applicable, to the other data as well. Then at a step **6118** the system can trigger a lighting control signal based on the output of the algorithm.

[**0289**] In embodiments, the lighting control unit can receive a timing signal based on a software program, such as a calendar program like Outlook from Microsoft, so that lighting units **100** can display or indicate illumination based on warning for appointments, or can produce particular shows on special days, such as holidays. For example, a lighting unit **100** could show green shows on St. Patrick's day, etc. Similar time or date-based signals can come from PDAs, PCs and other devices running software that includes time and date-based data.

[**0290**] Referring to **FIG. 59**, a flow diagram **5900** shows steps for triggering a lighting unit control event based on an item of data. At a step **5902** a system can store data, such as in memory **114**. At a step **5904** the system can store an algorithm for operating on the data, again in memory **114**. At a step **5908** the system can apply the algorithm to the data, then at a step **5910** trigger an event, such as a particular lighting control signal. The flow diagram **5900** illustrates that lighting control signals can be triggered based on any kind of data, applying a wide range of algorithms that convert raw data into control signals. For example, the data might be a level of a stock portfolio, a temperature, an on-off status, a voltage, a current, a magnetic field level, or any other kind of data.

[**0291**] Referring to **FIG. 60**, a flow diagram **6000** shows steps for triggering illumination control based on data from a sensor. At a step **6002** the system can store control algorithms for generating lighting control signals. At a step **6004** the system can sense a condition, such as by receiving data from a signal source **124** in the form of a sensor. Any kind of sensor can be used. Then at a step **6008** the system can apply an algorithm to the sensed data. Finally, at a step **6010** the output of the algorithm is used to trigger control of the lighting signal to a lighting unit **100**. In embodiments the

sensor can be a light sensor, and the sensor can provide control of a lighting signal based on a feedback loop, in which an algorithm at the step **6008** modifies the lighting control signal based on the lighting conditions measured by the sensor. In embodiments, a closed-loop feedback system can read spectral properties and adjust color rendering index, color temperature, color, intensity, or other lighting characteristics based on user inputs or feedback based on additional ambient light sources to correct or change light output.

[**0292**] A feedback system, whether closed loop or open loop, can be of particular use in rendering white light. Some LEDs, such as those containing amber, can have significant variation in wavelength and intensity over operating regimes. Some LEDs also deteriorate quickly over time. To compensate for the temperature change, a feedback system can use a sensor to measure the forward voltage of the LEDs, which gives a good indication of the temperature at which the LEDs are running. In embodiments the system could measure forward voltage over a string of LEDs rather than the whole fixture and assume an average value. This could be used to predict running temperature of the LED to within a few percent. Lifetime variation would be taken care of through a predictive curve based on experimental data on performance of the lights.

[**0293**] Degradation can be addressed through an LED that produces amber or red through another mechanism such as phosphor conversion and does this through a more stable material, die or process. Consequently, CRI could also improve dramatically. That LED plus a bluish white or Red LED then enables a color temperature variable white source with good CRI.

[**0294**] In other embodiments, with line voltage power supply integrated into LED systems, power line carrier (PLC) allows such systems to simplify further. Installing LED systems are complex and currently often require a power supply, data wiring and the installation of these devices so that they are not visible. For example, 10 pieces of cove lights require a device to deliver data (controller) and a power supply that must be installed and hidden. Additional costs are incurred by the use of these devices. To improve the efficiency of such a system, an LED fixture or line of fixtures can be made capable of being plugged into line voltage. An LED-based system that plugs directly into line voltage offers overall system cost savings and eases installation greatly. Such a system ties into existing power systems (120 or 220 VAC), and the data can be separately wired or provided through wireless control (one of several standards IR, RF, acoustic etc). Such systems are automatically not considered low voltage systems. Regulatory approvals may be different. Recent low power developments allow for line voltage applications to be used directly with integrated circuits with little additional componentry. While a protocol such as DMX can be used to communicate with lighting units **100**, there is no requirement for a particular protocol.

[**0295**] Lighting units **100** encompassed herein include lighting units **100** configured to resemble all conventional light bulb types, so that lighting units **100** can be conveniently retrofitted into fixtures and environments suitable for such environments. Such retrofitting lighting units **100** can be designed, as disclosed above and in the applications incorporated herein by reference, to use conventional sockets of all types, as well as conventional lighting switches, dimmers, and other controls suitable for turning on and off or otherwise controlling conventional light bulbs. Retrofit lighting units **100** encompassed herein include incandescent lamps, such as A15 Med, A19 Med, A21 Med, A21 3C Med, A23 Med, B10 Blunt Tip, B10 Crystal, B10 Candle, F15, GT, C7 Candle C7 DC Bay, C15, CA10, CA8, G16/1/2 Cand, G16-1/2 Med, G25 Med, G30 Med, G40 Med, S6 Cand, S6 DC Bay, S11 Cand, S11 DC Bay, S11 Inter, S11 Med, S14 Med, S19 Med, LINESTRA 2-base, T6 Cand, T7 Cand, T7 DC Bay, T7 Inter, T8 Cand, T8 DC Bay, T8 Inter, T10 Med, T6-1/2 Inter, T6-1/2 DC Bay, R16 Med, ER30 Med, ER40 Med, BR30 Med, BR40 Med, R14 Inter, R14 Med, K19, R20 Med, R30 Med, R40 Med, R40 Med Skrt, R40 Mog, R52 Mog, P25 Med, PS25 3C, PS25 Med, PS30 Med, PS35 Mog, PS52 Mog, PAR38 Med Skrt, PAR38 Med Sid Pr, PAR46 Scrw Trm, PAR46 Mog End Pr, PAR 46 Med Sid Pr, PAR56 Scrw Trm, PAR56 Mog End Pr, PAR 64 Scrw Trm, and PAR64 Ex Mog End Pr. Also, retrofit lighting units **100** include conventional tungsten/halogen lamps, such as BT4, T3, T4 BI-PIN, T4 G9, MR16, MR11, PAR14, PAR16, PAR16 GU10, PAR20, PAR30, PAR30LN, PAR36, PAR38 Medium Skt., PAR38 Medium Side Prong, AR70, AR111, PAR56 Mog End Pr, PAR64 Mog End Pr, T4 DC Bayonet, T3, T4 Mini Can, T3, T4 RSC Double End, T10, and MB19. Lighting units **100** can also include retrofit lamps configured to resemble high intensity discharge lamps, such as E17, ET18, ET23.5, E25, BT37, BT56, PAR20, PAR30, PAR38, R40, T RSC base, T Fc2 base, T G12 base, T G8.5 base, T Mogul base, and TBY22d base lamps. Lighting units **100** can also be configured to resemble fluorescent lamps, such as T2 Axial Base, T5 Miniature Bipin, T8 Medium Bipin, T8 Medium Bipin, T12 Medium Bipin, U-shaped t-12, OCTRON T-8 U-shaped, OCTRON T8 Recessed Double Contact, T12 Recessed Double Contact, T14-1/2 Recessed Double Contact, T6 Single Pin, T8 Single Pin, T12 Single Pin, ICETRON, Circline 4-Pin T-19, PENTRON CIRCLINE 4-pin T5, DULUX S, DULUX S/E, DULUX D, DULUX D/E, DULUX T, DULUX T/E, DULUX T/E/1N, DULUX L, DULUX F, DULUX EL Triple, DULUX EL TWIST DULUX EL CLASSIC, DULUX EL BULLET, DULUX EL Low Profile GLOBE, DULUX EL GLOBE, DULUE EL REFLECTOR, and DULUX EL Circline. Lighting units **100** can also include specialty lamps, such as for medical, machine vision, or other industrial or commercial applications, such as airfield/aircraft lamps, audio visual maps, special purpose heat lamps, studio, theatre, TV and video lamps, projector lamps, discharge lamps, marine lamps, aquatic lamps, and photo-optic discharge lamps, such as HBO, HMD, HMI, HMP, HSD, HSR, HTI, LINEX, PLANON, VIP, XBO and XERADEX lamps. Other lamps types can be found in product catalog for lighting manufacturers, such as the Sylvania Lamp and Ballast Product Catalog 2002, from Sylvania Corporation or similar catalogs offered by General Electric and Philips Corporation.

[**0296**] Referring to **FIG. 62** and the subsequent figures, typically an LED produces a narrow emission spectrum centered on a particular wavelength; i.e. a fixed color. Through the use of multiple LEDs and additive color mixing a variety of apparent colors can be produced, as described elsewhere herein.

[**0297**] In conventional LED-based light systems, constant current control is often preferred because of lifetime issues.

Too much current can destroy an LED or curtail useful life. Too little current produces little light and is an inefficient or ineffective use of the LED.

[0298] It has also been known that the light output from and LED may shift in wavelength as a result in changes in current. In general, the shift in output has been thought to be undesirable for most applications, since a stable light color has previously been preferred to an unstable one.

[0299] Recent developments in LED light sources with higher power ratings (>100 mA) have made it possible to operate LED systems effectively without supplying maximum current. Such operational ranges make it possible to provide LED-based lighting units **100** that have varying wavelength outputs as a function of current. Thus, embodiments of the present invention include methods and systems for supplying light of different wavelengths by changing the current supplied to the LEDs in a manner that is intended to generate different wavelengths of light. These embodiments can help produce improved quality colors and improved quality white light.

[0300] Turning a constant-current source on and off very rapidly can control apparent LED output intensity. Control techniques are varied, but one such technique is pulse-width modulation (PWM), described elsewhere herein and in the documents incorporated by reference herein.

[0301] Conventional PWM output is a digital signal (square wave) whose width can be varied under microprocessor control. Other techniques, such as changing current, or analog control, can be used, but sometimes have drawbacks because of lifetime effects, poor control and output variations across a number of LED devices. Analog control also has system ramifications with long distances potentially attenuating the light output.

[0302] Recent developments in LEDs include higher power packages that can produce significant light output. LEDs have shifted from producing fractional lumens to many 10's of lumens of light output in just a few years. As with other LEDs, with the recent higher power package developments such as the Luxeon line from Lumileds, as the current supplied to the LED varies, the output wavelength shifts. However, unlike previous generation of LEDs, the current change required will not damage the device. Although earlier lower power devices exhibit a similar characteristic wavelength shift, the amount of shift was small and not easily controllable without adverse effects on the LED itself. The current control in the new power packages can be significant without damage to the device. Thus, it can produce a much wider spectrum shift. In some systems, that shift can be undesirable. However, the shift enables certain novel methods and systems described herein.

[0303] Described herein are embodiments for controlling LEDs to produce a variable white color temperature and for controlling and calibrating LED-based lighting units **100** to produce consistent color from unit to unit during production and even use.

[0304] The calibration technique is not simply changing the modulation of the LEDs but actually shifting the output wavelength or color. The sensitivity of the eye varies over the spectrum, as described, for example, in Wyszecki and Stiles, Color Science 2nd Edition, Section 5.4, which is incorporated by reference herein. Current change can also broaden the narrow emission of the source and this shifts the saturation of the light source towards a broader spectrum source. Thus, current control of LEDs allows controlled shift of wavelength for both control and calibration purposes.

[0305] Referring to **FIG. 62**, in the visible spectrum, roughly 400 to 700 nm, the sensitivity of the eye varies according to wavelength. As shown in the chart **6200**, the sensitivity of the eye is least at the edges of that range and peaks at around 555 nm in the middle of the green.

[0306] Referring to **FIG. 63**, a schematic diagram **6300** shows pulse shapes for a PWM signal. By rapidly changing the current and simultaneously adjusting the intensity via PWM a broader spectrum light source can be produced. **FIG. 63** shows two PWM signals **6302**, **6304**. Both control signals provide identical current levels to an LED(s) when on, and the width of the pulse varies to change the apparent or perceived intensity. The top PWM signal A, **6302**, is narrower than the bottom signal, B, **6304**. As a result, the top signal **6302** has less apparent output. This happens at sufficient speeds so there is no perceptible flicker. This rate is typically hundreds of Hertz or more. The overall duty cycle, the time between two 'on' times, could be 10 milliseconds or less.

[0307] Referring to **FIG. 64**, a schematic diagram **6400** again shows two PWM signals **6402**, **6404**. In this case the two PWM signals **6402**, **6404** vary both in current level and width. The top one **6402** has a narrower pulse-width, but a higher current level than the bottom one **6404**. The result is that the narrower pulse offsets the increased current level in the top signal **6402**. As a result, depending on the adjustment of the two factors (on-time and current level) both light outputs could appear to be of similar brightness. The control is a balance between current level and the on time.

[0308] However, as noted above, one of the properties of many of the higher power LEDs is a significant wavelength shift that is a function of current. Thus, using the PWM together with coordinated current control, a lighting unit **100** can be created that varies in color (wavelength) by small amounts to produce several advantages. First, a change in color (hue) can be made with no change in intensity from a single LED. Second, rapidly changing the current levels can produce multiple emission spectra, which, when observed, produce a less saturated, broader spectrum source. Third, changes can be induced in multiple lighting units **100** to produce better additive mixing through the control of multiple strings or channels of LEDs in the combined light from the lighting units **100**. Thus, multiple, narrow-spectra, saturated LED lighting units **100** can be combined to provide a high-quality, broad spectrum LED-based light source.

[0309] The schematic diagram **6500** of **FIG. 65** shows the result of using a rapid shift in wavelength to shift the hue of an LED. The original emission spectrum **6502** is a relatively narrow-band emission. The resulting spectrum **6504** shows a shift that can result by changing the current. Note, however that simply changing the current will also change the LED output, which is why the dashed-line, current-modulated outputs **6504** differ in peak value. Higher current produces more light, and vice versa. Note that there is another effect from the V (lambda) curve, but over the relatively small shifts this may not be significant. This sensitivity adjustment could be incorporated into the control signals as well. The

perceived output intensity can be changed by adjustment of the modulation of the signal such as by using the PWM method as shown below.

[0310] The schematic diagram **6600** of **FIG. 66** shows the effect of changing both the current and adjusting the PWM for the purposes of creating a better quality white by shifting current and pulse-widths simultaneously and then mixing multiple sources, such as RG & B, to produce a high quality white. High quality can be determined through such metrics as Color Rendering Index or direct comparisons with traditional white light sources. In essence, the spectrum is built up by rapidly controlling the current and on-times to produce multiple shifted spectra. The wavelength is wiggled back and forth and this produces a broader spectrum output. Thus, the original spectrum **6602** is shifted to a broader-spectrum **6604** by current shifts, while coordinated control of intensity is augmented by changes in PWM.

[0311] The control described in connection with **FIGS. 62 through 66** can be provided with various embodiments, including feedback loops, such as using a light sensor as a signal source **124**, or a lookup table or similar facility that stores light wavelength and intensity output as a function of various combinations of pulse-width modulation and pulse amplitude modulation.

[0312] In embodiments, a lighting system can produce saturated colors for one purpose (entertainment, mood, effects), while for another purpose it can produce a good quality variable white light whose color temperature can be varied along with the spectral properties. Thus a single fixture can have narrow bandwidth light sources for color and then can change to a current and PWM control mode to get broad spectra to make good white or to make non-white light with broader spectrum color characteristics. In addition, the control mode can be combined with various optical facilities **120** described above to further control the light output from the system.

[0313] Referring to **FIG. 67**, a schematic diagram **6700** shows that current control can provide perceived broadening of a narrow-band source, such as a color LED. Referring to **FIG. 68**, with multiple LEDs as light sources, combined with perceived broadening as a result of varying the current supplied to the LEDs, a much broader-band source can be provided.

[0314] In embodiments, the methods and systems can include a control loop and fast current sources to allow an operator to sweep about a broad spectrum. This could be done in a feed-forward system or with feedback to insure proper operation over a variety of conditions.

[0315] Referring to **FIG. 69**, a control system **6900** embodiment can use a variety of well-known methods. Thus, the control facility **6902** can switch between a current-control mode **6904** (which itself could be controlled by a PWM stream) and a separate PWM mode **6908**. Such a system can include simultaneous current control via PWM for wavelength and PWM control balanced to produce desired output intensity and color. **FIG. 69** shows a schematic diagram **6900** with one possible embodiment for creating the two control signals from a controller, such as a microprocessor to control one or more LEDs in a string. Multiple such strings can be used to create a light fixture that can vary in color (HSB) and spectrum based on the current and on-off control. The PWM signal can also be a PWM Digital-to-analog converter (DAC) such as those from Maxim and others.

[0316] Note that the functions that correspond to particular values of output can be calibrated ahead of time by determining nominal values for the PWM signals and the resultant variations in the LED output. These can be stored in lookup tables or a function created that allows the mapping of desired values from LED control signals.

[0317] While the invention has been disclosed in connection with the embodiments shown and described above, various equivalents, modifications and improvements will be apparent to one of ordinary skill in the art and are encompassed herein.

1. A lighting system, comprising:

a plurality of LEDs selected from a group consisting of red, green, blue, amber, white, orange and UV LEDs;

a controller adapted to control an overall color formed by combined light from the plurality of LEDs; and

a variable optical facility adapted to modify the combined light.

2. The lighting system of claim 1, wherein the lighting system is adapted to permit the variable optical facility to be varied in response to a user input.

3. The lighting system of claim 2, further comprising a user interface adapted to receive the user input.

4. The lighting system of claim 1, wherein the variable optical facility is adapted to be varied in response to mechanical activity.

5. The lighting system of claim 4, further comprising a piezoelectric component configured and arranged to provide the mechanical activity.

6. The lighting system of claim 4, further comprising an electric motor component configured and arranged to provide the mechanical activity.

7. The lighting system of claim 4, wherein the variable optical facility is adapted to be deformed by the mechanical activity such that at least a portion of the combined light is altered.

8. The lighting system of claim 7, wherein substantially all of the combined light is altered.

9. The lighting system of claim 1, wherein the variable optical facility is adapted to be varied in response to electrical activity.

10. The lighting system of claim 9, wherein the variable optical facility is comprised of a MEMS device.

11. The lighting system of claim 1, wherein the variable optical facility is adapted to be varied in response to a preprogrammed input.

12. The lighting system of claim 11, wherein the lighting system is configured such that the preprogrammed input is provided to the variable optical facility by the controller.

13. The lighting system of claim 1, wherein the lighting system is coupled to a network.

14. The lighting system of claim 13, wherein the variable optical facility is adapted to be varied in response to a network command.

15. The lighting system of claim 1, further comprising a sensor coupled to the variable optical facility.

16. The lighting system of claim 15, wherein the lighting system is configured such that the variable optical facility is varied in response to an output of the sensor.

17. The lighting system of claim 16, wherein the sensor is configured and arranged such that the output of the sensor is indicative of light from at least one of the plurality of LEDs.

18. The lighting system of claim 16, wherein the sensor comprises a temperature sensor.

19. The lighting system of claim 16, wherein the sensor comprises an acoustic sensor.

20. The lighting system of claim 16, wherein the sensor is adapted to sense at least one of voltage and current.

21. The lighting system of claim 16, wherein the sensor comprises a digital data sensor.

22. The lighting system of claim 19, wherein the variable optical facility is adapted to be varied in coordination with a sound pattern.

23. The lighting system of claim 1, wherein the variable optical facility is adapted to be varied in coordination with a video display.

24. The lighting system of claim 1, wherein the variable optical facility is adapted to achieve a substantially continuous variation of the combined light over a selected interval of time.

25. The lighting system of claim 1, wherein the variable optical facility is adapted to be varied to achieve discrete variations of the combined light over a selected interval of time.

26. The lighting system of claim 1, wherein the variable optical facility is configured to contain a fluid.

27. The lighting system of claim 26, wherein the fluid comprises a compressible fluid.

28. The lighting system of claim 27, wherein the fluid comprises a gas.

29. The lighting system of claim 27, wherein the fluid comprises a liquid.

30. The lighting system of claim 26, wherein the fluid comprises a liquid.

31. The lighting system of claim 26, wherein the variable optical facility comprises a valve for adding or removing the fluid such that the volume of the variable optical facility may be varied.

32. The lighting system of claim 31, wherein the fluid comprises a gas.

33. The lighting system of claim 31, wherein the fluid comprises a liquid.

34. The lighting system of claim 30, wherein the liquid is semi-opaque.

35. The lighting system of claim 30, wherein the liquid includes bubbles arranged to modify the light from the LEDs.

36. The lighting system of claim 26, wherein the fluid is capable of glowing in response to the combined light.

37. The lighting system of claim 1, wherein the variable optical facility comprises a lens having an adjustable dimension.

38. The lighting system of claim 1, wherein the variable optical facility comprises digital mirror.

39. The lighting system of claim 1, wherein the variable optical facility comprises a movable mirror.

40. The lighting system of claim 39, wherein the movable mirror comprises a rotatable mirror.

41. The lighting system of claim 39, wherein the movable mirror is adapted to be controlled by a galvanometer.

42. The lighting system of claim 39, wherein the movable mirror is adapted to be controlled by a stepper motor.

43. The lighting system of claim 1, wherein the variable optical facility comprises a grating light valve.

44. The lighting system of claim 1, wherein the variable optical facility comprises an acousto-optical component.

45. The lighting system of claim 1, wherein the variable optical facility comprises a non-imaging optical surface.

46. The lighting system of claim 1, wherein the variable optical facility is adapted to be thermally activated.

47. The lighting system of claim 1, wherein the variable optical facility comprises a device comprising a lens array, and wherein the device is adapted to displace the lens array such that at least a portion of the combined light is varied.

48. The lighting system of claim 1, wherein the plurality of LEDs are disposed in a circular pattern.

49. The lighting system of claim 1, wherein the plurality of LEDs are disposed in a linear pattern.

50. The lighting system of claim 1, wherein the plurality of LEDs comprises at least one LED of a first color and at least one LED of a second color.

51. The lighting system of claim 1, wherein the variable optical facility comprises a reflective material.

52. The lighting system of claim 1, wherein the variable optical facility comprises a refractive material.

53. The lighting system of claim 1, wherein the variable optical facility comprises a translucent material.

54. The lighting system of claim 53, wherein the variable optical facility contains a fluid.

55. The lighting system of claim 1, wherein the variable optical facility comprises a diffractive component.

56. The lighting system of claim 1, wherein the variable optical facility comprises a refractive component.

57. The lighting system of claim 1, wherein the variable optical facility comprises a phosphorescent material.

58. The lighting system of claim 1, wherein the variable optical facility comprises a fluorescent material.

* * * * *