CALIFORNIA ENERGY COMMISSION

PIER Lighting Research Program

Project 2.3 Low-profile LED Luminaires

FINAL REPORT

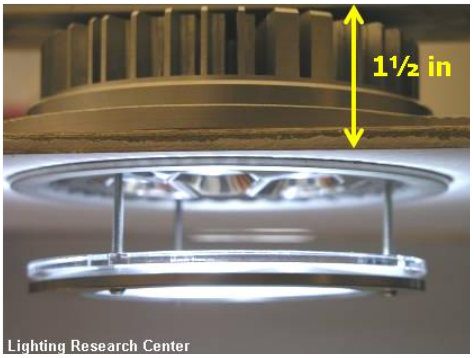

Consultant Report

JANUARY 2005
500-01-041-A-4

Arnold Schwarzenegger, *Governor*

CALIFORNIA ENERGY COMMISSION

Prepared By:
Lighting Research Center
Nadarajah Narendran, Project Lead
Troy, NY

Managed By:
Architectural Energy Corporation
Judie Porter
Program Director
Boulder, CO
CEC Contract # 500-01-041

Prepared For:
Don Aumann
Contract Manager

Nancy Jenkins
PIER Buildings Program Manager

DISCLAIMER

This report was prepared as the result of work sponsored by the California Energy Commission. It does not necessarily represent the views of the Energy Commission, its employees or the State of California. The Energy Commission, the State of California, its employees, contractors and subcontractors make no warrant, express or implied, and assume no legal liability for the information in this report; nor does any party represent that the uses of this information will not infringe upon privately owned rights. This report has not been approved or disapproved by the California Energy Commission nor has the California Energy Commission passed upon the accuracy or adequacy of the information in this report.

Petitioner Hisense USA Corporation
Exhibit 1028 - Page 2 of 70

Contact Information:

Subcontract Project Manager
Nadarajah Narendran
Lighting Research Center
21 Union Street
Troy, NY 12180
518-687-7100 – Voice
518-687-7120 – Fax
narenn2@rpi.edu

AEC Program Director
Judie Porter
Architectural Energy Corporation
2540 Frontier Avenue
Boulder, CO 80301
303-444-4149 – Voice
303-444-4304 – Fax
jporter@archenergy.com

Prepared By:

N. Narendran, Lighting Research Center
Jean Paul Freyssinier
Jennifer Taylor

Project Team:

N. Narendran, Lighting Research Center
Jean Paul Freyssinier
Ramesh Raghavan
Richard Pysar
Lei Deng
Jonas Concepcion
Yimin Gu
Seth Wiley
Martin Overington
Howard Ohlhous
Robert J. Thomas
Hua Yu
Rajesh V. Nattanmai

Petitioner Hisense USA Corporation
Exhibit 1028 - Page 3 of 70

Acknowledgements

The research, outcomes, and product development presented in this report are a result of funding provided by the California Energy Commission's Public Interest Energy Research (PIER) program's Lighting Research Program (LRP) on behalf of the citizens of California.

Architectural Energy Corporation and the Lighting Research Center (LRC) acknowledges the support and contributions of the individuals below:

Project Director: Nadarajah Narendran, LRC.

Technical Assistance: Jean Paul Freyssinier, Ramesh Raghavan, Richard Pysar, Lei Deng, Yimin Gu, Jonas Concepcion, Seth Wiley, Martin Overington, Howard Ohlhous, Robert J. Thomas, Hua Yu, Rajesh V. Nattanmai, LRC; Oliver Holmes Jr., Pat O'Dea, Rensselaer Polytechnic Institute; Robert Norris, Kris Shuda, James Flaherty, Gary Kendall, Otis Elevator Company; Dipesh Pandya, Westinghouse Lighting Corporation.

Special acknowledgements: Westinghouse Lighting Corporation for providing co-funding for producing the low-profile LED luminaire prototypes; Lumileds Lighting and Advance Transformer for providing LED products for testing and the luminaire prototypes; Robert Norris, Kris Shuda, James Flaherty, Gary Kendall, from Otis Elevator for their invaluable assistance in installing the low-profile LED luminaires in an elevator, facilitated by Oliver Holmes Jr. and Patrick O'Dea of Rensselaer Polytechnic Institute.

Element 2 Element Lead: Steve Johnson, LBNL

Element 2 Technical Advisory Group: Al Marble, Advance Transformer; James Ibbetson, Cree Lighting; Ted Ferreira, City Design Group; Bill Daiber, WFD Associates.

Program Advisory Committee: Ron Lewis, Department of Energy; Jerry Mills, Easy Lite; Gregg Ander, SCE; Bill Daiber, WFD Associates; James Bryan, Arden Realty; Neall Digert, Solatube; Jim Benya, Benya Lighting; Dennis Tiede, Sempra Utilities; Noah Horowitz, NRDC; Amy Cortese, Northwest Energy Efficiency Alliance; Pekka Hakkarainen, Lutron; Peter Turnbull, PG&E; Michael Waxer, Carmel Development Co; Kit Tuveson, Tuveson & Associates; David Kaneda, Integrated Design Associates, Inc; Connie Buchan, SMUD.

Program and Contract Management: Eric Stubee and Nancy Jenkins, California Energy Commission; Karl Johnson, CIEE; Judie Porter, Architectural Energy Corporation; Don Aumann, CLTC.

Petitioner Hisense USA Corporation
Exhibit 1028 - Page 4 of 70

Table of Contents

ACKNOWLEDGEMENTS **4**

PREFACE **6**

EXECUTIVE SUMMARY **7**
- INTRODUCTION 7
- PROJECT OBJECTIVES 8
- PROJECT OUTCOMES 8
- RECOMMENDATIONS 9
- BENEFITS TO CALIFORNIA 10
- CONCLUSIONS 10

ABSTRACT **11**

PROJECT OBJECTIVES **12**

PROJECT APPROACH **13**
- PROJECT TASKS 13
- CHANGES AND MODIFICATIONS 13

INTRODUCTION **14**
- BACKGROUND AND OVERVIEW 14
- ELEVATOR INDUSTRY BACKGROUND 15
- COLLABORATION WITH INDUSTRY STAKEHOLDERS 15

THE LOW-PROFILE LED LUMINAIRE SOLUTION **20**
- GENERAL LIGHTING REQUIREMENTS FOR COMMERCIAL ELEVATORS 20
- LOW-PROFILE LED LUMINAIRE PERFORMANCE CRITERIA AND SPECIFICATION DEVELOPMENT 21

LOW-PROFILE LED LUMINAIRE SPECIFICATIONS **24**
- INTRODUCTION 24
- SPECIFICATIONS OF THE LED USED IN THE LOW-PROFILE LUMINAIRE 24
- SPECIFICATIONS OF THE DRIVER USED IN THE LOW-PROFILE LUMINAIRE 31
- OPTICAL SPECIFICATION 34
- LOW-PROFILE LED LUMINAIRE SPECIFICATION SUMMARY 37

LOW-PROFILE LED LUMINAIRES EVALUATION REPORT **43**
- INTRODUCTION 43
- BACKGROUND AND RESULTS OF THE MEASUREMENTS 43
- GENERAL PERFORMANCE OF THE LED LOW-PROFILE LUMINAIRE PROTOTYPES 48
- HUMAN FACTORS CRITERIA – FIELD INSTALLATION EVALUATION 52
- CONCLUSIONS OF THE LOW-PROFILE LED LUMINAIRE EVALUATION 64

COMMERCIALIZATION POTENTIAL **65**

PROJECT OUTCOMES **66**

RECOMMENDATIONS AND CONCLUSIONS **67**
- RECOMMENDATIONS 67
- BENEFITS TO CALIFORNIA 67
- CONCLUSIONS 67

REFERENCES **69**

Petitioner Hisense USA Corporation
Exhibit 1028 - Page 5 of 70

Preface

The Public Interest Energy Research (PIER) Program supports public interest energy research and development that will help improve the quality of life in California by bringing environmentally safe, affordable, and reliable energy services and products to the marketplace.

The PIER Program, managed by the California Energy Commission, annually awards up to $62 million to conduct the most promising public interest energy research by partnering with Research, Development, and Demonstration (RD&D) organizations, including individuals, businesses, utilities, and public or private research institutions. PIER funding efforts are focused on the following six RD&D program areas:

- Buildings End-Use Energy Efficiency
- Industrial/Agricultural/Water End-Use Energy Efficiency
- Renewable Energy
- Environmentally-Preferred Advanced Generation
- Energy-Related Environmental Research
- Strategic Energy Research

The *Low-profile LED Luminaire Project* (Project 2.3) is a part of the *Lighting Research Program* (LRP), a PIER Buildings End-Use Energy Efficiency program under PIER contract No. 500-01-041, which is managed by Architectural Energy Corporation. The development of a Low-profile LED Luminaire is the product of a two-year research project conducted by the LRC. This final report provides a complete record of the objectives, methods, findings, and accomplishments of the entire project. It will be of interest to elevator manufacturers, lighting equipment manufacturers, building owners, developers, electrical/lighting designers, electric utilities, and to LED lamp and driver manufacturers.

For more information about PIER or the LRP, or to obtain the Final Report for LRP and other publications produced by this project, please visit www.energy.ca.us/pier or contact the Commission's Publications Unit at 916-654-5200. All research products are also available through Architectural Energy Corporation at www.archenergy.com/lrp.

Petitioner Hisense USA Corporation
Exhibit 1028 - Page 6 of 70

Executive Summary

Introduction

Solid-state lighting technologies are rapidly becoming viable light sources for general illumination applications. Light-emitting diodes (LEDs), a semiconductor-based light source, have been used successfully in the past for indication and signaling applications. Currently, this technology is in a very important stage of its development: New markets for general illumination are opening, and LED manufacturers are diligently working to improve the efficiencies and light output of LEDs in order to capitalize upon the increasing demand for illumination LEDs. With increased light output, LEDs now can be used beyond traditional indicator applications to provide illumination in a variety of indoor and outdoor applications.

Current LED technology has reached efficiencies high enough to offer potential energy savings in applications where incandescent lamps are used. With this in mind, the goals of this project were to design, build, and demonstrate in the field a working prototype of a low-profile LED luminaire that is 25 percent more efficient than a comparable incandescent luminaire; and second, to install the low-profile LED luminaires in an elevator application to evaluate the performance and people's reactions to this technology in a realistic environment.

LEDs are evolving rapidly; thus, they are beginning to offer benefits in more niche applications. Among the many reasons for this growth is that LEDs have distinctive features that offer the possibility for unique solutions that were not possible with conventional light sources. For example, the relative small size of LEDs allows for the creation of efficient low-profile luminaires that could become invaluable in applications where space is at a premium. One example of such application is elevator downlighting. When compared to a traditional incandescent downlight, a low-profile LED luminaire could offer a reduction of approximately 4 to 7 inches in the overall clearance needed for installation. Although this reduction may not seem much in many contexts, in the elevator industry it means that the overall height of the cabin may be reduced by the same amount, with the subsequent reduction in materials and weight. Ultimately, the reduced weight translates to motor and braking systems of lesser dimensions, hence saving more than just lighting energy in the end.

A very interesting result of this project is the confirmation that the use of control strategies for the lighting system in elevator cabins could yield significant energy savings, on the order of at least 75 percent. A study of the traffic patterns of two elevators in different buildings showed that 95 percent of the traffic occurs between 7:00 AM and 7:00 PM. Even within those twelve hours, the elevators spent approximately eight to ten hours idling. The conclusion of these observations is that out of the 24 hours that lighting systems are functioning in elevators, only three to four are useful in providing illumination for the users.

Petitioner Hisense USA Corporation
Exhibit 1028 - Page 7 of 70

Project Objectives

The overarching goal of Project 2.3 was to design, build, and demonstrate in the field a working prototype of a low-profile LED luminaire that is 25 percent more efficient than a comparable incandescent luminaire. The application chosen for the field demonstration was elevator cabin downlighting.

The technical objectives of this project were the following:

- Research the state of the art in LED technology
- Research and evaluate applications that would benefit from low-profile LED luminaires
- Develop design and evaluation criteria for the low-profile LED luminaire
- Gather input from manufacturers and potential users on the design criteria of the low-profile LED luminaire
- Optimize the efficiency, size, and optical performance of LED luminaires to meet the lighting design needs of the selected applications.
- Improve the cost-effectiveness of current LED luminaire technology.
- Develop design criteria for the low-profile LED luminaire and test the prototypes to ensure they meet the stated objectives.
- Obtain the participation of lighting manufacturers in the development program.

Project Outcomes

The research resulting from this project successfully met the objectives outlined above. The main outcomes of this project are the following:

- Designed, optimized, built, and tested prototypes of low-profile LED luminaires for an elevator downlighting application
- Installed and field-tested the low-profile LED luminaire prototypes
- Collected information on users' reactions and elevator traffic patterns to make recommendations for control strategies that would result in higher energy savings
- Collected market information from the elevator industry and gathered feedback from two elevator manufacturers and four lighting equipment manufacturers
- Achieved an efficiency for the low-profile LED luminaire that was at least 40 percent higher than the incandescent baseline (i.e., the existing lighting in the elevator used for the field test)
- Designed and added decorative sparkle elements to increase the acceptability of the low-profile LED luminaire

Figure 1 shows different views of the low-profile LED luminaire resulting from the research of this project.

Petitioner Hisense USA Corporation
Exhibit 1028 - Page 8 of 70

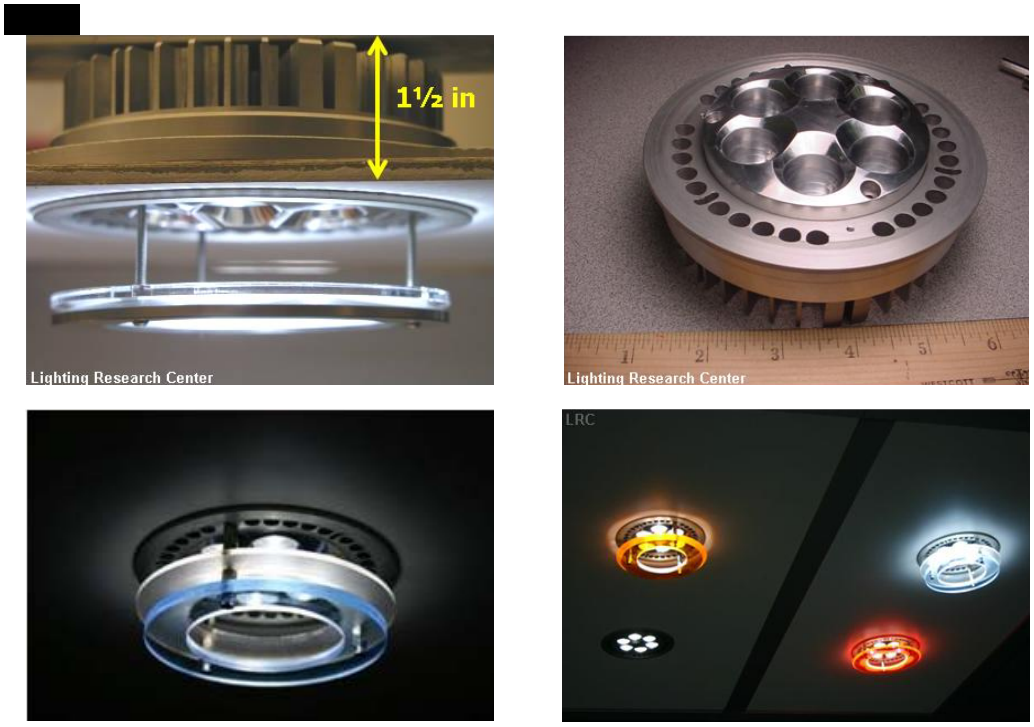

Figure 1. Different views of the low-profile LED luminaire prototypes manufactured during this project, including different options for sparkle and decorative elements.

Recommendations

Based on the positive results of this project, the LRC researchers believe there are several venues to build upon the achievements of Project 2.3.

It would be important, for example, to learn more about the traffic patterns in elevators in different building types. Characterization of traffic patterns in retail, high-rise residential, hotels, schools, hospitals, and malls could yield considerable savings in the near term by allowing the correct use of control strategies to match the different needs of each one of these applications.

Anecdotal evidence and personal observations indicate that presently most elevators appear to be overlit. Current lighting recommendations do not match the reality of many applications, resulting in energy waste. Understanding the absolute light level needs of different applications would further increase the potential energy savings by using only the amount of light required and not more. This is another important area of research that would benefit from funding.

During the process of this project, several applications were selected based on the promise to save energy in the near term. Allocation of funds to further develop applications such as museum lighting and jewelry display cabinets most likely will result in two more opportunities to save energy by using low-profile LED luminaires.

Finally, it would be important to continue the research in the low-profile LED luminaire area regarding the design of a custom but more efficient driver with dimming and load-shedding

Petitioner Hisense USA Corporation
Exhibit 1028 - Page 9 of 70

capabilities, and, most importantly, the interconnection with the controls of the elevator cabin to take advantage of the large potential for savings during the time the elevators are idling.

Benefits to California

According to the most current information found in the listed references (US Census Bureau, 2005; Elevator World, 1996), there are approximately 653,000 functional elevators in the United States. The best estimate of the number of elevators in the state of California was approximately 85,000. Assuming that only 50 percent of the elevators are currently illuminated by incandescent lighting, and that 50 percent of those elevators are retrofitted with LED technology, the annual energy savings could amount to 28,000 MWh (assuming a conservative 25 percent savings). If a control system were included during the retrofit to minimize the lighting when the elevator is not in use, then the savings could amount to 63,000 MWh per year.

Conclusions

The main conclusions resulting from the research of this project are the following:

- Project 2.3 successfully demonstrated that it is possible to obtain at least 20 percent energy savings by using LED technology to substitute incandescent downlights in elevator applications. This project not only showed that for the same light level the energy savings could be as much as 45 percent (such as in the field installation), but there is also a significantly larger potential for energy savings by using the appropriate control strategies.
- The results of the field evaluation showed that on average a typical university-based building with one elevator could save at least 75 percent of the energy used for lighting in the elevator cabin with the use of appropriate control strategies.
- The project showed that LED technology is reaching sufficient maturity to be used in general lighting applications such as elevators and display cabinets. From the samples evaluated, it was obvious that the efficacy of phosphor-converted white LEDs is beyond that of incandescent and halogen lamps. Commercial samples evaluated during the process of this project showed efficacies of up to 35 lumens per Watt when driven below their nominal operating current, which has the added benefit of lower operating temperatures. In the past twelve months, manufacturers and research laboratories have demonstrated efficacies as high as 75 lumens per Watt for low power devices and up to 56 lumens per Watt for high power devices, confirming that in the near future LEDs will have efficacies and light output packages high enough to be used in many more general lighting applications.

Additionally, the field evaluation showed that LED technology is accepted positively by the end user when designed carefully to match the needs of the application.

The low-profile LED luminaire designed for this project successfully demonstrated that LEDs are a viable technology to achieve energy savings in the State of California while providing a lower total cost of ownership to building owners.

Petitioner Hisense USA Corporation
Exhibit 1028 - Page 10 of 70

Abstract

This report describes the process of developing, producing, and testing a low-profile LED luminaire for elevator downlighting applications. The overarching goals of *Project 2.3 Low-profile LED Luminaire* are to (1) design, build, and demonstrate in the field a working prototype of a low-profile LED luminaire that is 25 percent more efficient than a comparable incandescent luminaire, and (2) obtain the participation of lighting manufacturers in the development program.

The goals of the project were successfully achieved. Functional prototypes of a low-profile LED luminaire were designed and built in collaboration with Westinghouse Lighting Corporation, Lumileds Lighting, and Advance Transformer, and the prototypes were field-installed and tested with the collaboration of Otis Elevator and Rensselaer Polytechnic Institute. The low-profile LED luminaire prototypes surpassed the goal of efficiency by an ample margin (up to 70 percent more efficient than the incandescent baseline), and were positively rated by the users of the elevator used in the field evaluation.

Petitioner Hisense USA Corporation
Exhibit 1028 - Page 11 of 70

Project Objectives

The overarching goal of Project 2.3 was to design, build, and demonstrate in the field a working prototype of a low-profile LED luminaire that is 25 percent more efficient than a comparable incandescent luminaire. The application chosen for the field demonstration is elevator cabin downlighting.

Additional objectives included:

- Researching the state of the art in LED technology
- Researching and evaluating applications that would benefit from low-profile LED luminaires
- Developing design and evaluation criteria for the low-profile LED luminaire
- Gathering input from manufacturers and potential users on the design criteria of the low-profile LED luminaire
- Optimizing the efficiency, size, and optical performance of LED luminaires to meet the lighting design needs of the selected applications
- Improving the cost-effectiveness of current LED luminaire technology
- Developing design criteria for the low-profile LED luminaire and testing the prototypes to ensure that they meet the stated objectives
- Obtaining the participation of lighting manufacturers in the development program.

Petitioner Hisense USA Corporation
Exhibit 1028 - Page 12 of 70

Project Approach

Project Tasks

The proposed research and development tasks for this project were the following:

2.3 Task 1.	LED Evaluation and Light Source Specification Development
2.3 Task 2.	Development of Ballast/Control System Specification
2.3 Task 3.	Analysis of Application Design
2.3 Task 4.	Optical Design and Modeling
2.3 Task 5.	Gain Input from Luminaire Manufacturers & Lighting Designers
2.3 Task 6.	Refine, Build and Test Prototypes
2.3 Task 7.	Technology Transfer Activities
2.3 Task 8.	Production Readiness Plan

Project reports are available for review at

Changes and Modifications

During the course of Project 2.3, there was one major change in the scope of work.

The initial goal of the project was to design and build laboratory prototypes of at least two applications for the low-profile LED luminaire. The publication *Deliverable 2.3.3e – Final List of Most Promising Applications* from this project describes seven potential applications that could benefit from LED technology in the near term. In the publication, elevator downlighting, along with jewelry display cabinets, museum lighting, and undercabinet lighting, were recommended for further development. However, after further consideration, it was concluded that building prototypes with the support of at least one lighting manufacturer and performing a field evaluation for just one application would be more beneficial to the objectives of Project 2.3 than building laboratory prototypes only for two of the down-selected applications. The application chosen for the field demonstration of the benefits of LED technology was elevator downlighting.

The change in the scope of work described above resulted in the expansion of the working team for Project 2.3 to include Westinghouse Lighting Corporation, Lumileds Lighting, Advance Transformer, Otis Elevator, and Rensselaer Polytechnic Institute.

It is worth emphasizing that project 2.3 benefited greatly from the collaboration between the LRC and Westinghouse Lighting in manufacturing the prototypes. The participation of Lumileds Lighting and Advance Transformer Company in the project certainly helps to leverage the visibility of the PIER efforts in trying to promote new energy-efficient lighting technologies. And equally important was the involvement of personnel from the Albany, New York office of Otis Elevators, who provided feedback along the way and supported the installation of the LED luminaire prototypes in an elevator provided by Rensselaer Polytechnic Institute.

Petitioner Hisense USA Corporation
Exhibit 1028 - Page 13 of 70

Introduction

Background and Overview

Solid-state lighting technologies are rapidly becoming viable light sources for general illumination applications. Light-emitting diodes (LEDs), a semiconductor-based light source, have been used successfully in the past for indication and signaling applications. Currently, this technology is in a very important stage of its development: New markets for general illumination are opening, and LED manufacturers are diligently working to improve the efficiencies and light output of LEDs in order to capitalize upon the increasing demand for illumination LEDs. With increased light output, LEDs now can be used beyond traditional indicator applications to provide illumination in a variety of indoor and outdoor applications.

Current LED technology has reached efficiencies high enough to offer potential energy savings in applications where incandescent lamps are used. With this in mind, the goals of this project were to design, build, and demonstrate in the field a working prototype of a low-profile LED luminaire that is 25 percent more efficient than a comparable incandescent luminaire; and second, to install the low-profile LED luminaires in an elevator application to evaluate the performance and people's reactions to this technology in a realistic environment.

LEDs are evolving rapidly; thus, they are starting to offer benefits in more niche applications. Among the many reasons for this growth is that LEDs have distinctive features that offer the possibility for unique solutions that were not possible with conventional light sources. For example, the relative small size of LEDs allows for the creation of efficient low-profile luminaires that could become invaluable in applications where space is at a premium.

Earlier in the process of the project, a systematic analysis was performed to identify applications that would provide an opportunity to showcase the benefits of LED technology. The analysis aimed to match the needs of the different applications listed and the unique characteristics of LED technology (see *Deliverable 2.3.1b LED Evaluation Report* for a detailed list of characteristics).

Among others, the most important criteria used for the analysis included visual tasks and quality of lighting issues (e.g., visual comfort and appeal), energy considerations, architectural integration, and economic factors. During the analysis, non-tangible and non-lighting related benefits were also considered. Among the lighting criteria, the following had the most relative weight: light level, color rendering and color appearance (correlated color temperature of the light source), light source efficacy, and total lumens typically used in each application. The main source of information and reference for recommendations regarding each of the design criteria was the Illuminating Engineering Society of North America's (IESNA) *Lighting Handbook* (Rea, 2000), but other sources were used as well, including the *Lighting Pattern Book for Homes* (Leslie and Conway, 1996) and internal LRC (LRC) publications.

The publication *Deliverable 2.3.3e – Final List of Most Promising Applications* from this project describes seven potential applications that could benefit from LED technology in the near term. Each one of those seven applications offered a clear opportunity for the low-profile LED luminaire, mainly because of the space constraints that they typically offer. In the same publication, four applications, elevator downlighting, along with jewelry display cabinets, museum lighting, and undercabinet lighting, were especially recommended for further development.

Petitioner Hisense USA Corporation
Exhibit 1028 - Page 14 of 70

After further consideration by the LRC team, and the LRP Advisory Committee and Technical Advisory Committee, it was concluded that building prototypes with the support of at least one lighting manufacturer and performing a field evaluation for just one application would be more beneficial to the objectives of Project 2.3 than building laboratory prototypes only for two of the down-selected applications, as originally planned. The application chosen for a field demonstration of the benefits of low-profile LED technology was elevator downlighting.

Elevator industry background

The United States industry for elevator manufacturing is currently worth $11 billion and is growing steadily at an annual rate of 6.5 percent (Fredonia, 2003). This growth is expected to continue through the year 2007 in which it will be worth a total of $15.1 billion (Fredonia, 2003). Economic indices show that the industry has grown increasingly in all areas. From 1997 until 2002, many portions of the industry more than doubled in their demand. The significant gains in the industry are mostly due to the use of many modern technologies in today's elevators. Microprocessor-based controls and remote/automated monitoring systems are installed in many of today's elevators (Fredonia, 2003). These types of systems greatly enhance the performance and reliability of elevator services. Advancements in elevating/lifting equipment have also fueled growth in this industry, particularly from products such as stair lifts, moving walkways, and other specifically designed elevators for the disabled (Infoshop, 2004). These products are the most highly demanded. However, the most significant gains in the industry have been realized in the service and maintenance aspects of elevators. The extensive install base for most companies gives elevator producers the opportunity to provide repair or upgrading services. There are an estimated 653,000 elevators and around 30,000 escalators in operation today in the United States alone (Elevator Industry Statistics, 1998). This shows the considerable size of the install base for the elevator and escalator industry, understandably making it a potentially attractive market for new lighting equipment. The revenues generated from servicing elevators accounts for nearly 60 percent of the total industry's revenues. On average, the cost of a maintenance contract is $150 to $200 per month (Norris, 2005).

According to the 1997 U.S. Census Bureau, there are a total of 196 business establishments for the manufacturing of elevator and escalators throughout the United States. Total shipments for the U.S. are valued at $1.607 trillion dollars. Of this total, California is responsible for about 1.5 percent from 16 manufacturing establishments (US Census Bureau, 2004).

Collaboration with industry stakeholders

Otis Elevator Company

From the beginning of the project, the LRC team looked for collaboration with at least one elevator manufacturer. As a result, the LRC team visited Otis's headquarters in Connecticut in June 2003. During the visit, the LRC made two presentations to a group of 24 people representing most of the companies of United Technologies Corporation, Otis's parent company. Among the attendees were five people from Otis Elevator. The LRC presentations focused on the benefits of solid-state lighting for elevator applications and potential collaboration with the LRC in the LRP Project 2.3. After the LRC presentations, a private meeting with representatives from Otis Elevator took place. Additionally, the LRC team met in 2004 with representatives of the Albany, New York office of Otis on at least four occasions to discuss the details of the field installation.

Petitioner Hisense USA Corporation
Exhibit 1028 - Page 15 of 70

During those meetings feedback was also offered regarding the desirable features of downlights for commercial elevators.

Background information on Otis Elevator Company

The Otis Elevator Company, owned by United Technologies Corporation, is the largest maker of elevators and electric escalators in the world. In 2003, Otis's revenues were almost $8 billion, which represented approximately 25 percent of United Technologies's revenues. A large contribution to Otis's recurring revenues comes from servicing installed Otis equipment (i.e., elevators, electric escalators, and other horizontal movement equipment). The company has service contracts on approximately 700,000 of the 1.2 million Otis-made elevators currently installed in the world.

Otis is expanding rapidly its presence in other countries, especially in Eastern Europe, Russia, and China. Currently, Otis has a 25 percent share of the world's new elevator market. Otis's largest competitors include Swiss-based Schindler Elevator Co. (15 percent of the market), German-based ThyssenKrupp Elevator, and Finland-based KONE Corp.

Summary of information relevant to Project 2.3

Otis representatives acknowledged the potential benefits of LED technology regarding ruggedness and durability, lower energy use, flexibility in intensity control and color, and creation of innovative cabin designs. However, none of these characteristics are intrinsically attractive to Otis since they manufacture a limited series of standard products that use either fluorescent or incandescent lighting. These elevator cabins are usually modified or refinished by third-party companies, including contractors and industrial designers. Most of the modifications to standard cabins appear to be the result of requests by architects, interior designers, and decorators.

Otis does not support custom orders for the interior of the cabin; rather, they refer customers to one of several industrial design companies they have worked with in the past, most of which appear to operate overseas (UK). As a clarification point, Otis does provide customization on options such as shape, cabin dimensions and capacity, travel speed, and travel distance.

For existing elevators, Otis offers modernization kits (five examples are depicted in **Figure 2**). These options include different materials for the ceiling, walls and floor, and different trims, reveals and handrails. However, similar to new standard products, the lighting options of the modernization kits are either fluorescent or incandescent. The fluorescent lighting option is rated at 160 Watts (W), and the incandescent lighting option is rated at 200 W to 300 W (four or six downlights).

Petitioner Hisense USA Corporation
Exhibit 1028 - Page 16 of 70

Figure 2. Examples of the modernization kits offered by Otis Elevator for existing elevators. The options include different materials for the ceiling, walls and floor, and different trims, reveals and handrails, but only two lighting systems (fluorescent or incandescent downlights). (Photos from www.otis.com/modernizationdetail.)

Other companies manufacture products for elevator cabin renovation, including lighting. The following is just one example from Forms+Surfaces, an architectural materials and products company. Many options for material, finishes and colors are available, including size of the modules, handrails, ceiling materials, reveals and frames. Notably, there is only one option for lighting that comes preinstalled in the ceiling. For this product series, the lighting consists of six 12V, 20 W halogen downlights with an optional dimmer. As with many other companies, emergency lighting is optional and includes a battery pack and two additional incandescent lamps inside two of the downlights. **Figure 3** shows one of the six possible configurations from Forms+Surfaces. Items marked 1 to 5 are options selected by the customer.

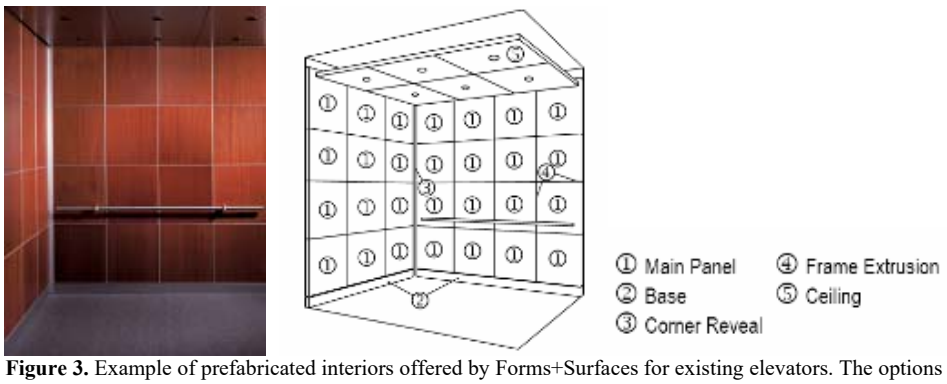

Figure 3. Example of prefabricated interiors offered by Forms+Surfaces for existing elevators. The options include different materials for the ceiling, walls, floor, trims, reveals and handrails, but only one lighting system (six 12V/20W halogen downlights) is offered. (Graphic from www.forms-surfaces.com.)

The examples in **Figures 2** and **3** are shown in this report to illustrate the lack of energy-efficient lighting options for elevators and the similarity of products in the marketplace, which could offer an edge to the low-profile LED luminaire solution offered in this project.

According to Otis and other elevator manufacturers' public information, most of the challenges in energy efficiency are in the lifting and braking system, and in the control logic of the elevator. Modern elevator controllers are sophisticated systems that consider many traffic pattern variables in order to optimize elevator operation in a building. Traffic analysis and control account for the majority of the systems' efficiency.

If one considers, for example, that on average the electric load of any lighting system would be less than 500 W, whereas the peak load demand of an elevator could be easily as high as 15,000 W, then understandably the largest potential for energy savings is not in the lighting system. However, elevator cabin lighting can be considered a large energy consumer given the constant operation and congregated load from the close to 700,000 elevators currently in operation in the United States. Another potential benefit is reduced maintenance of the lighting system. Otis services most of its elevators; however, in many cases (at least for the Albany office), service to the lighting system is not included. In such cases, these maintenance benefits could be passed on to the facilities manager or building administrator.

One of the key benefits of LED lighting technologies is the enormous flexibility to create custom lighting design solutions that are much simpler than with any other lighting technology. As

Petitioner Hisense USA Corporation
Exhibit 1028 - Page 17 of 70

explained, this flexibility is not largely of interest to Otis, given that they do not provide custom interiors for the most part. However, this same flexibility would be of great interest to third party companies that design, create, install, and sometimes service such custom cabins.

The one benefit that seemed to resonate with Otis was the ability of low-profile LED luminaires to reduce the space necessary for their installation in the false ceiling of the cabin. During the visit to Otis headquarters, the LRC showed a rapid-prototype sample of a low-profile LED luminaire. It was estimated that the low-profile LED luminaire could save between 4 to 6 inches of space in the ceiling, therefore allowing for the reduction in the overall height of the elevator shell. This space savings could result in less material and therefore less weight, allowing the nominal ratings of the motor and braking system to be reduced. Those aspects combined could result in significant energy savings in the near term.

KONE, Inc.

Communication with KONE was established in early November 2004 after a lead from Judie Porter with AEC. In the past few weeks, the LRC has explained the background of the PIER projects, the specifics of Project 2.3, and the potential of solid-state lighting especially in elevator applications. Publications from project 2.3 were also provided to KONE for further reference. Since the first communication, KONE has shown interest in a potential future collaboration. An invitation to visit the field installation of the low-profile LED luminaire was extended to KONE, and LRC remains confident that it will take place in the near term following the resolution of scheduling conflicts.

Background information on KONE, Inc.

Based in Finland, KONE is the world's fourth largest elevator and escalator company. KONE operates approximately 800 service centers in over 40 countries. KONE is a full service company that manufactures, installs, services, and upgrades elevators, escalators, and automatic building doors.

KONE delivers approximately 25,000 elevators worldwide annually and provides service on a contractual basis to approximately 520,000 elevators and escalators. KONE is known for product innovation and services for the elevator industry with a large interest in energy efficiency and sustainability.

Summary of information relevant to Project 2.3

Approximately 80 percent of the 25,000 elevators that KONE produces every year are shipped with standard panel, flooring, and ceiling (including lighting) selections from the options available from the factory. Out of the many potential benefits of LEDs for elevator applications, KONE ranks long life as one of the most important, apparently because they provide contract services for maintenance that include lighting. Having a lighting system that lasts longer than any of the current technologies is appealing to KONE as a potential way of reducing operation costs.

One of the primary concerns of KONE is the design of "green elevators"—systems that are intrinsically energy-efficient and environmentally responsive. KONE also sees the value of LED technology in that it does not contain mercury, is very easily controllable for added energy savings, and lasts a long time, reducing materials and waste in general. However, there is a business reality associated with these environmental goals. Cost is one of the driving concerns in the elevator industry in general, second only to safety. Consequently, there is a cost/benefit

Petitioner Hisense USA Corporation
Exhibit 1028 - Page 18 of 70

relationship with elevator lighting that needs to be further understood in order to make LEDs an attractive option for the elevator industry.

Petitioner Hisense USA Corporation
Exhibit 1028 - Page 19 of 70

The low-profile LED luminaire solution

From the information collected during the earlier phases of the project, the team reached the conclusion that elevator downlighting truly offered an opportunity to demonstrate energy and non-energy benefits with a low-profile LED luminaire. The following sections detail the development of a solution for elevator downlighting applications.

General lighting requirements for commercial elevators

Elevators are mostly used in public buildings and are often shared by strangers when in use. Generally, elevators are small and confined spaces; ideally, lighting should help people feel comfortable by making the space look and feel more enjoyable. Bright ceilings and walls can give a feeling of increased size and will also indirectly illuminate people's faces, hence reducing shadows that can potentially create feelings of discomfort and anxiety for the users. Current lighting practice recommends minimum horizontal light levels of between 3 to 5 footcandles (fc) at the floor level (Rea, 2000). It is, however, fairly common to find elevators that exceed such recommendations by as much as 10 or 15 times. Such high levels seem to be linked to additional recommendations of having a similar light level in the elevator as in the lobby or corridor that lead to it.

The specific lighting design criteria for an elevator will also depend on the architectural features of the space (e.g., the message that the space is trying to convey, such as a public versus a private building, a high-end versus a low-end building). One additional lighting design criterion for commercial general use elevators is the distribution of the lighting (i.e., a combination of downlighting, wall-washing, and diffuse ambient illumination is generally desirable for most applications).

As described above, a non-lighting benefit of LEDs in elevator applications is the potential for low-profile luminaires, which could lead to a reduction of the elevator cabin height. When compared to a traditional incandescent downlight, a low-profile LED luminaire could offer a reduction in the overall clearance needed for installation of approximately 4 to 6 inches. Although this reduction may not seem much in many contexts, in the elevator industry, it means that the overall height of the cabin can be reduced by the same amount with the subsequent reduction in materials and weight. Ultimately, the reduced weight translates in motor and braking systems of lesser dimensions, hence saving more than just lighting energy in the end.

Petitioner Hisense USA Corporation
Exhibit 1028 - Page 20 of 70

Low-profile LED luminaire performance criteria and specification development

Introduction

This section provides the performance criteria that were developed to satisfy the design and the evaluation objectives of the project. Most of the criteria were specifically matched to the needs of the elevator application chosen for the field demonstration and is the result of the work performed during the earlier phases of the project.

General performance criteria selection

Background

Ideally, all technologies should be designed and evaluated on the bases of technical merits and human interaction. Successful applications of lighting technologies are those that take into consideration not only the characteristics intrinsic to the hardware, but also the needs of a specific application to provide an added value to the solution by matching the two. As it will be explained in the following sections of this report, the criteria used during the design and development of the low-profile LED luminaire consist of the technical and human requirements for elevator lighting discussed at the beginning of this section.

Technical criteria

The main technical criteria selected for the performance evaluation of the low-profile luminaire are based on the specifications presented in previous reports from this project. Said specifications are based on the objectives of the field demonstration and were carefully developed based on the particular needs of the application (i.e., elevator lighting).

Energy efficiency criterion

As described before, the overarching goal of this project is to demonstrate the feasibility of an LED luminaire that would be at least 25 percent more efficient than a comparable incandescent luminaire. For the purposes of this project, an incandescent luminaire with one reflector R20, 50 W lamp was selected as the baseline (i.e., this is the existing lamp type in the elevator selected for the field evaluation). Therefore, the first criterion for the evaluation of the low-profile luminaire is that is should show an energy use reduction of at least 20 percent compared to the incandescent baseline. This comparison should be made on a same light output basis or on a system-efficacy basis.

Photometric criteria

The second most important set of criteria are those related to the photometric performance of the luminaire. Among the most important aspects described in the specifications are:

<u>Efficiency of the reflector</u>

Arguably, the most important factor in achieving the energy efficiency criterion of the luminaire is the efficiency of the reflector. The specifications laid out in previous reports of the project require the low-profile luminaire to have an efficiency of 90 percent. The luminaire efficiency is subject to the design and materials of the reflector. In the final design of the reflector, a material with a 90 percent reflectance was necessary to reach the efficiency goal. Such high reflectance, however, is difficult to achieve during a prototyping stage.

Petitioner Hisense USA Corporation
Exhibit 1028 - Page 21 of 70

Light distribution

The light distribution of the prototypes should match as closely as possible to that outlined in the final specification of the optical design and that of the lamp used as baseline. The evaluation of this criterion should take into consideration manufacturing tolerances that are usually associated with a prototype.

Light output of the luminaire

In trying to provide the same light levels as the incandescent luminaire, the low-profile luminaire should provide a total light output of approximately 300 lumens. This criterion is based on the nominal light output of the incandescent lamp existing in the elevator selected for the field evaluation (310 lumens).

Color characteristics

The two color properties specified for the luminaire include a correlated color temperature of approximately 5500 K and a color rendering index of approximately 70. These two parameters relate almost exclusively to the performance of the LEDs, as they are supplied by the manufacturer and hardly depend on the design of the luminaire. However, it is important to evaluate these two aspects of the light sources in trying to understand people's reaction to the luminaire in a real application.

Color consistency between LED units

MacAdam ellipses are the best method to specify color consistency for an application where light sources are next to each other, such as in this case. Following the recommendations from a recent study by the LRC (2004), the criterion for determining a maximum acceptable difference in color among the LEDs used in this project should be a 2-step MacAdam ellipse.

Thermal criterion

Thermal management is possibly one of the biggest challenges in the development of new luminaires using LED technology. Good thermal management, by means of properly dimensioned heat sinks, is key in realizing the potentials for energy efficiency and long life of LEDs. The criterion to evaluate thermal performance of the LED low-profile luminaire should be based on keeping the temperature of the junction below the maximum temperature specified by the LED manufacturer. In this case, the maximum allowable junction temperature is 90ºC if a useful life of 50,000 hours is desired (Lumileds, 2004). Since junction temperature is difficult to measure, the corresponding temperature of the LED board could also be used in evaluating the performance of the luminaire. In this case, it is estimated that a board temperature of 65ºC corresponds to a junction temperature of approximately 90ºC.

Lumen maintenance and life of the system criteria

Given the relative short duration of the project in comparison with the potential useful life of an LED system (up to several years), no formal evaluation will be performed for these criteria. However, it is expected that the system would live up to the specified number of hours if proper thermal management were applied. An estimate of the junction temperature could be useful in determining if the system is expected to fail before its nominal useful life. Additionally, the installation shall be monitored to ensure that no failures occur during the period of the field test.

Mechanical criteria

The two main criteria that should govern the evaluation of the low-profile LED luminaire are overall height and weight.

Petitioner Hisense USA Corporation
Exhibit 1028 - Page 22 of 70

Overall height

The second most important design criterion within the context of this project is a low profile. A very small physical size has been quoted as one of the unique attributes of LEDs. This characteristic is important in applications where space is at a premium and the reduced size of a luminaire could bring many benefits. Since the beginning of the project, a criterion for a profile of less than 2 inches in height has been discussed. Therefore, the low-profile LED prototype shall meet the evaluation criteria described above while keeping the overall height to a maximum of 2 inches.

Overall weight

No definite criterion is set for the weight of the low-profile luminaire. However, it would be desirable for an LED luminaire to have an overall weight equal to or less than a comparable incandescent luminaire. This criterion could become particularly important in applications such as an elevator, where the weight of the lighting system could potentially affect the efficiency of the rest of the cabin system.

Human factors criteria

As mentioned above, no lighting application could be considered successful if it did not directly address the needs of people. In general terms, the goal of this project is to demonstrate not only that an LED luminaire can realize energy savings, but that people respond positively to the technology in different applications. In this particular case, the following elements will make up the human factors criteria for the evaluation of the LED luminaire.

The means of assessment of the human factors criteria shall be a survey of elevator users where the LED luminaires will be installed. By means of different questions, researchers aimed to investigate the following criteria.

Visual performance

To evaluate the ability of the LED luminaire to facilitate visual performance, the horizontal average illuminance level and a series of questions shall be used. Target illuminance levels shall be a minimum of 3 to 5 fc as per current recommendations (Rea, 2000) and up to a maximum of the existing light levels in the elevator where the field demonstration will take place.

Visual comfort

Visual comfort shall be evaluated mainly by asking users of the elevator with the LED luminaire about glare, the overall brightness of the luminaire, and shadows and reflections that could result in nuisance.

Overall appearance of the space and the luminaires (aesthetic/acceptance judgments)

The aesthetic judgment of the users of the elevator can be gauged with questions regarding the overall appearance of the elevator and luminaires (like/dislike), the color of the light in the elevator, the way colors are rendered including people's skin tone, and by providing a list of concepts that the users can use to describe the appearance of the elevator (e.g., attractive-ugly, old-fashioned-modern, unattractive-stylish, bright-dark).

Petitioner Hisense USA Corporation
Exhibit 1028 - Page 23 of 70

Low-profile LED luminaire specifications

Introduction

The following sections of the report detail the process by which the specifications of the low-profile LED luminaire were selected. The specifications tried to match as best as possible the performance criteria described in the previous sections. However, in selecting the components of the luminaire and setting the specifications of the materials and characteristics of the reflector, some decisions were made based on time or budget restrictions. It is worth noting that the restrictions experienced during this project are not expected to occur during a mass production stage, as they were simply a consequence of manufacturing a small number of prototypes.

The details for the selection of the light source are given first, following by the driver, and finally the optical design of the reflector. The rationale behind each component choice is given after each specification (i.e., LED, driver, optics).

Specifications of the LED used in the low-profile luminaire

The first component of the low-profile LED luminaire to be chosen was the light source. Based on the understanding gained during the first tasks of the project and by analyzing the needs of the elevator application, the team was able to select an LED capable of providing all the features desired for its application in the low-profile LED luminaire.

The LED chosen for the low-profile luminaire was the Luxeon III Emitter from Lumileds Lighting, which has the photometric characteristics listed in Table 1 (Lumileds, 2004a). **Figure 4** shows the typical spectral power distribution, and **Figure 5** shows the radiation distribution of the Luxeon III LED.

The selection of the light source was made based on requirements of light output, color properties, efficacy, lumen maintenance, intensity distribution, among other. The following sections detail the requirements of the low-profile LED luminaire and how is that the selected LED satisfies those requirements.

Table 1. Photometric characteristics of white Luxeon III emitters used in the low-profile luminaire (from Lumileds, 2004a).

Typical light output:	65 lm (at 700 mA and at a junction temperature (J_T) of 25ºC) 80 lm (at 1000 mA and at a J_T of 25ºC)
Average lumen maintenance:	70% after 50,000 h of operation (at 700 mA and at a J_T of 90ºC) 50% after 20,000 h of operation (at 1000 mA and at a J_T of 90ºC)
Correlated color temperature: (CCT)	5500 K
Color rendering index: (CRI)	70 ± 5%
Radiation (candlepower) distribution:	Lambertian

Petitioner Hisense USA Corporation
Exhibit 1028 - Page 24 of 70

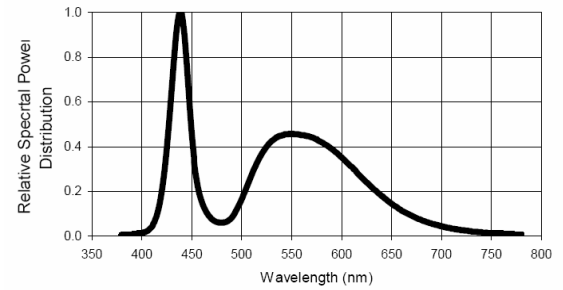

Figure 4. Typical normalized spectral power distribution of white Luxeon III emitters (from Lumileds, 2004a).

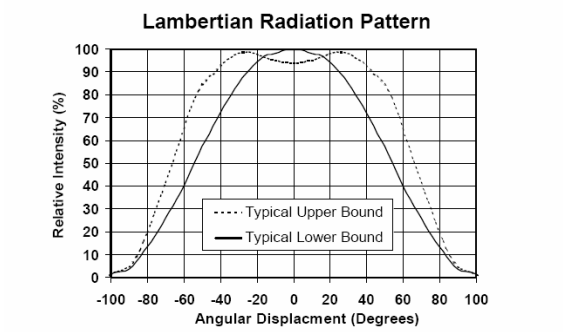

Figure 5. Typical Lambertian radiation distribution of white Luxeon III emitters (from Lumileds, 2004a).

Light output requirements

Commercial elevators are illuminated usually by fluorescent or recessed incandescent lighting. In the current lighting design practice, both standard incandescent and halogen incandescent light sources are used in downlight luminaires. The most common incandescent lamp types used for this application include A19 and reflector (R20 and R30; PAR20 and PAR30; and MR16) lamps ranging in power from 40 to 75 W. The light output of such lamps ranges from approximately 400 to 1200 lm.

It would be expected that the low-profile LED luminaire for this application would produce a comparable light output. Typically, one standard elevator cabin (approximately 4 foot by 6 foot) is illuminated by four to eight incandescent luminaries, resulting in an average maintained illuminance sometimes higher than 50 fc (Narendran and Raghavan, 2003b). However, lower values of light output per luminaire may be sufficient for many applications. Current recommendations for elevator lighting (Rea, 2000) cite average maintained values of 3 to 5 fc as adequate.

Illuminator-type LEDs (**Figure 6**) have larger lumen packages (ranging from approximately 20 to 120 lm per device for white light) and operate at significantly higher drive currents (a few hundred mA) than indicator-type (i.e., 5-mm and surface mount) LEDs (Narendran and Raghavan, 2003a). The need for a few hundred lumens per luminaire renders indicator-type LEDs unsuitable for this project.

Petitioner Hisense USA Corporation
Exhibit 1028 - Page 25 of 70

Figure 6. Examples of illuminator-type LEDs from Lumileds Lighting (left), OSRAM Opto Semiconductors (middle), and Nichia Corporation (right). Photographs courtesy of the respective companies.

On the other hand, with the current LED technology, a single illuminator-type LED with light output as high as an incandescent source is not yet commercially available. Therefore, the LRC has concluded that a cluster of illuminator-type LEDs with the highest lumen output will be the most appropriate light source for the low-profile luminaire.

Using LEDs with 50 to 100 lm or more per package will require approximately six LEDs per luminaire and six luminaires to provide the target average illuminance level of 12 to 14 fc. Low lumen packages (i.e., less than 30 lm per LED) will result in more LEDs per fixture and in more demanding heat sinking requirements, hence, making the luminaire bulkier. Based on the light output criterion, currently there are two commercially available LEDs suitable for the design of the LED luminaire. The first option with the highest lumen package available is a 5W LED from Lumileds (Luxeon V Portable Emitter) that produces 120 lm at a nominal efficacy of 24 lm/W (Lumileds, 2004b). The second option is a 3W LED from Lumileds (Luxeon III Emitter) that produces 65 lm at a nominal efficacy of 25 lm/W (Lumileds, 2004a).

However, the rated life of the 5W LED is 1000 hours, which is much lower than what is desirable for this application, leaving the 3W LED as the best option for this project. As LED technologies improve, other packaging options from manufacturers will surely become available and be suitable for elevator downlighting.

In summary, the low-profile LED luminaire requires a cluster of LEDs with light output of at least 50 lm per unit. Currently, the best matching commercially available product is the 3W Luxeon III emitter.

Color properties requirements

Color rendering index and correlated color temperature

There are two approaches for creating white light with LEDs. The first approach is to mix multiple colored LEDs, such as red, green, and blue, in suitable proportions. The second approach is to combine a GaN-based blue emitter with cerium-doped yttrium aluminum garnet (YAG:Ce) phosphor, which are then embedded in an epoxy mix (Narendran *et al*., 2001b).

The multiple colored LEDs approach, commonly known as RGB mixing, can achieve white light with a wide range of correlated color temperatures (CCT), relatively high color rendering index (CRI) values of up to 90, and a theoretically higher luminous efficacy than phosphor-converted (pc) white LEDs. However, in practice, it is very difficult to achieve a uniform mix efficiently. In general, RGB systems have the disadvantage of being too sensitive to slight changes in the peak wavelength of the red LED. As a result, the color rendering index (CRI) of an RGB system can range from approximately 20 to 70, but without necessarily changing people's response to color preference of an object illuminated by systems of either CRI value (Narendran and Deng, 2002). Because of this color shift possibility, RGB systems usually require complex feedback controls in

Petitioner Hisense USA Corporation
Exhibit 1028 - Page 26 of 70

order to maintain the light output and color settings over time and to compensate for changes in operating temperature.

On the other hand, the CRI of current pc-white LEDs ranges from 70 to 90 at CCTs ranging from approximately 2800 Kelvin (K) to 6500 K. Such CRI and CCT values fall into the range of traditional light sources currently used for elevator applications (i.e., incandescent and fluorescent). However, research has shown that despite a relatively high (70+) CRI, pc-white LEDs with a CCT of 5500 to 6500 K lack the ability to adequately render warm-toned objects, particularly skin tones (Narendran and Deng, 2002). One potential solution is found in the 1W Luxeon Emitter, which is available in a warm white (3300 K) CCT with a typical CRI of 90 (typical R_9 of 70) (Lumileds, 2004c). Unfortunately, this product only produces 20 lm and is not yet available in a 3W version, thus making it not suitable for this project.

One aspect to be investigated during the field demonstration of the low-profile LED luminaire is the response of users to the color-rendering properties of pc-white LEDs of high CCT (>5500 K) in real applications of general lighting. It is expected that for most commercial applications, LEDs with high CCT values of 5500 to 6500 K will perform similarly to traditional light sources. But as more high-output products become available, higher CRI values of up to 90 at warmer CCTs of approximately 3000 K would be desirable for some elevator lighting applications.

Color consistency

With the current manufacturing processes, most illuminator-type pc-white LEDs in the market show large differences in color from one LED to another. Color consistency of pc-white LEDs may be critical for acceptance as they are used more and more in general lighting applications. One cost-effective solution is to bin batches of LEDs so their color appearance is consistent when they are clustered together.

A recent study by the LRC (2004) recommends color binning within a 2-step MacAdam ellipse when LEDs are placed side by side and are directly visible (such as in the case of the low-profile luminaire), or when they are used to illuminate white surfaces.

LED manufacturers often offer color binning as an option on most of their product lines, and although it may incur premium charges, it should not be a limitation in the design of LED luminaires.

In summary, the low-profile LED luminaire requires a cluster of pc-white LEDs with a CRI of 70 or more at a CCT of 3000 to 5500 K, and color-binned to within a 2-step MacAdam ellipse. Currently, the best matching commercially available product is the 3W Luxeon III emitter.

System efficacy

The main factors affecting the overall efficiency of a given luminaire include the efficacy of the light source, the efficiency of the reflector and other optical control elements, and the efficiency of the power gear (e.g., ballast, driver, low voltage transformer).

The efficacy of current incandescent technology, including halogen and infra-red (IR) halogen, ranges from approximately 10 to 30 lm/W. For the purpose of this project, the initial baseline for comparison is a luminaire using a 50W IR coated MR16 lamp, which currently is considered as the best practice for elevator downlighting. This lamp has an estimated typical efficacy of 30 lm/W (Howlett, 2004). The efficiency of open reflector luminaires ranges from approximately 65 percent to 95 percent, depending on the size, finish, and distribution of the reflector, and the type

Petitioner Hisense USA Corporation
Exhibit 1028 - Page 27 of 70

and size of lamp. Typical four-inch diameter open reflector luminaires for MR16 lamps have an efficiency ranging from approximately 83 percent to 86 percent. Finally, the efficiency of low-voltage transformers ranges from 70 percent for traditional laminated electromagnetic transformers to 92 percent for high-efficiency toroidal transformers, depending on the size of the electric load and the load factor. Typically, low voltage luminaires use laminated electromagnetic transformers with an efficiency of approximately 80 percent.

After accounting for the factors mentioned above, the baseline efficacy of an incandescent luminaire for elevator downlighting would be ideally set at 20.6 lm/W (30 lm/W × 0.86 × 0.80). Therefore, the low-profile LED luminaire is expected to achieve an efficacy of at least 25.8 lm/W (20.6 lm/W × 1.25).

Considering that the efficiency of an electronic LED driver and the reflector could be 90 percent, the efficacy of the LED used in the low-profile luminaire should be at least 31.8 lm/W (31.8 lm/W × 0.90 × 0.90 = 25.8 lm/W).

At present, the 3W Luxeon III emitter selected for this project is rated at a nominal efficacy of 25 lm/W, making it one of the most efficacious LED products available on the market. Current illuminator-type LEDs are rated at efficacies ranging from 25 to 30 lm/W, depending on driving current and operating conditions. These values, close behind the required goal, are expected to increase significantly in the near future. Therefore, the proposed baseline for this project shall be the incandescent lamp used in the elevator where the field evaluation would take place (i.e., 50W R20 lamp).

Life and lumen maintenance

The potential for long life of up to 100,000 hours is one of the most attractive characteristics of solid-state technologies for general illumination, especially in applications where maintenance is difficult or expensive. However, pc-white LEDs have yet to demonstrate this capacity.

For traditional light sources, lamp life is defined as the median operating time that elapses under specified conditions (Rea, 2000). By this definition, LEDs are often rated at 100,000 hours because, under nominal operating conditions, LEDs rarely burn out. Rather, as with most light sources, the light output of LEDs decreases gradually over time (Narendran *et al.*, 2000, 2001a). Presently, there is no standard definition of life for LEDs in the lighting industry (Narendran *et al*., 2001a). As an initial step, the lumen maintenance of LEDs has been proposed as a criterion to determine "useful life" in a given application. Useful life is defined as the time that elapses until the LED fails to provide a specified light level (Narendran *et al*., 2001a). Some LED manufacturers now provide the number of hours until the lumen maintenance of their products reaches 70 percent (Whitaker, 2004).

The average life of incandescent lamps ranges from 750 to 3000 hours and from 10,000 to 20,000 hours for fluorescent lamps. There are, however, two practical factors affecting the actual lamp life of incandescent and fluorescent lamps in this application. The first factor, applicable only to fluorescent lamps, is the expected increase of life due to constant operation. Under this burning cycle, the average life of fluorescent lamps can increase up to 160 percent more than nominal conditions (3 hours on, 20 min off) (Rea, 2000). The second factor, applicable to both technologies, is the vibrating environment to which the lamps are exposed. Although there are no quantitative data to determine how much an elevator's vibration would undermine the average lamp life of these two technologies, it is an important issue to consider.

Petitioner Hisense USA Corporation
Exhibit 1028 - Page 28 of 70

For elevator illumination purposes, it is desirable that an LED luminaire outlast traditional light sources. As an initial target, an average life of at least 40,000 hours until the lumen maintenance reaches 70 percent seems a reasonable number. Feedback from elevator manufacturers will be sought on this matter and reported at a later date.

The current specifications of Luxeon III cite average life values of 50,000 hours for a lumen maintenance value of 70 percent, if the operating temperature of the junction is maintained at or below 90ºC (Lumileds, 2004a).

Radiation (candlepower) distribution

Theoretically, it is possible to design a reflector with any given light distribution around commercial LEDs. But in order for a reflector to be efficient, and as a general guideline, it is desirable that most (70 to 80%) of the light output of a luminaire should come directly from the light source, whereas the rest of the light output (20 to 30%) should come from the contribution of the reflector itself.

Most illuminator-type LEDs of interest for this project are available in broad Lambertian and side-emitting candlepower distributions. By definition, broad and Lambertian candlepower distributions would provide higher direct contributions from the light source to the light output of a luminaire than would a side-emitting distribution. Since the main goal of this project is to achieve an LED system with high efficiency, side-emitting distributions have not been considered.

The Luxeon III Emitter is available in an almost symmetric and Lambertian distribution, hence making it suitable as the light source of the low-profile luminaire.

Thermal management

The high drive currents (200 to 1000 mA) and power consumption (1 to 5 W) of illuminator-type LEDs cause them to generate a significant amount of heat in a very small area. This heat has to be dissipated from the LED efficiently in order to prevent permanent damage and poor performance. Usually, external heat sinks are needed to dissipate heat generation at the junction.

In the case of the low-profile luminaire, there are no specific requirements regarding the heat generation for each LED. Rather, the thermal management will be designed into the heat sink and body of the luminaire so the operating temperature at the junction is maintained at or below 90ºC (Lumileds, 2004a).

From a practical point of view, however, there was one consideration that affected the thermal management of the low-profile LED luminaire. Currently, there are no commercial products that cluster six Luxeon III emitters. The LRC designed and outsourced one printed circuit board (PCB) to house and power the LEDs. The design and specifications of the PCB had to be carefully developed, as it affects directly heat transfer from the LEDs into the heat sink. For all practical purposes, the PCB becomes an obstacle between the LED and the heat sink, increasing the thermal resistance. Given the heat dissipation needs of the Luxeon III emitters, a standard PCB made of FR4 or similar materials was not an acceptable solution. In order to transfer heat from the LED into the heat sink efficiently, the PCB needed to have a metal core (i.e., metal-core printed circuit board (MCPCB)). Metal-core PCBs are specialized products because the heat slugs in high power LEDs are not electrically insulated. Therefore, in order to prevent short circuits, MCPCBs have an electrically insulating but heat conductive layer on top of the metal core.

Petitioner Hisense USA Corporation
Exhibit 1028 - Page 29 of 70

Consequently, all these extra layers that add heat resistance have to be considered when dimensioning the heat sink for the LEDs. Incidentally, there are few manufacturers of this type of products. After some research in the area, the LRC selected a vendor that manufactured the metal-core PCB and attached the LEDs to it.

Controllability

LEDs are low voltage, direct current solid-state devices; therefore, LEDs need power conditioners in order to operate when connected to the mains. Due to the low dynamic impedance nature of LEDs, in which a small change in forward voltage generates a large change in current, it is desirable to operate LEDs under a controlled current regimen (Schie, 2004). Therefore, the fundamental objective of an LED power conditioner, usually called a driver, is to operate the LED under constant current conditions.

On the other hand, the light output of LEDs is proportional to the forward current at which the LED is driven. As a result of driving LEDs at currents lower than nominal, the energy efficiency of the device is usually increased (Narendran and Raghavan, 2003a). This gain in efficacy at lower operating currents is certainly an advantage over fluorescent and incandescent technologies. In the case of fluorescent lamps, dimming is not generally thought to compromise significantly the system's efficiency (Rea, 2000) but may have an impact in useful life. However, incandescent lamps suffer great decrements of efficiency as they are dimmed (Rea, 2000).

Another advantage of LEDs is that they are impervious to on and off cycles. Along with this capacity to be turned on and off at will without affecting the useful life, LEDs respond almost instantaneously (<100 ns) when changing from off to on state.

In summary, LED technology easily lends itself to different control strategies to further increase energy savings. Continuous and bi-level-dimming, load-shedding, and integration of occupancy sensors are just a few features that could be designed easily into LED drivers. None of the control strategies mentioned poses any special requirement on the LED itself. Rather, electronic drivers can be designed around the desired LED circuit configuration (e.g., parallel, series, or combination), starting characteristics (e.g., ramp up to a maximum), or waveform (e.g., constant current, pulse-width modulation) in order to provide a number of control features, without sacrificing LED life or efficiency.

Reliability

As a metric of reliability, the 3W Luxeon III emitter chosen for the low-profile luminaire is expected to have an average useful life of 50,000 hours, as defined in item *Life and lumen maintenance* of this report.

Light source specification summary

Based on an evaluation of the attributes discussed above, the LRC team concluded that 3W illuminator-type pc-white LEDs with a CRI of 70 at a CCT 5500 K, and a nominal efficacy of 25 lm/W, are a good starting point to demonstrate the energy savings potential of LED technology in a general illumination application. The 3W Luxeon III emitter from Lumileds was considered a suitable choice as the light source for the low-profile luminaire. It is expected that in the near future, as technology improves, the efficacy of illuminator-type LEDs will increase significantly to values well over 50 lm/W. Higher efficacy values will make LEDs even more attractive from an energy savings standpoint.

Petitioner Hisense USA Corporation
Exhibit 1028 - Page 30 of 70

Specifications of the driver used in the low-profile luminaire

The next logical step was to select the driver for the LEDs specified for the low-profile LED luminaire. The driver chosen for the low-profile luminaire was model Xitanium LED120A0024V10D from Advance Transformer. The main electrical characteristics of such driver are listed in **Table 2** (Lumileds, 2003a, 2003b). **Figure 7** shows the typical package and physical dimensions, and **Figure 8** shows the connection diagram of the driver (Lumileds, 2003a, 2003b).

Table 2. Electrical characteristics of Advance Transformer's electronic driver model Xitanium LED120A0024V10D (from Lumileds, 2003a, 2003b).

Input voltage	108 – 132 V ac, 60 Hz
Input power	2.9 – 31.9 W maximum
Input current	0.30 A maximum
Output voltage	10.4 – 24.6 V dc
Output power	2.3 – 25.5 W
Output current	100 – 1050 mA ±5%
Efficiency	80% typical
Total harmonic distortion	20% maximum
Power factor	0.9 minimum
Current crest factor	1.5 maximum
Line regulation	1% output voltage variation across input voltage range
Load regulation	5% output current variation across load range

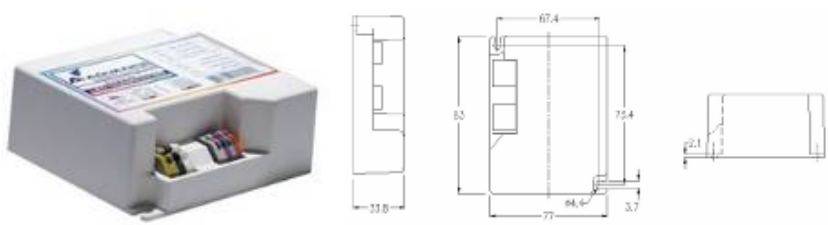

Figure 7. Picture of typical commercial package of driver model LED120A0024V10D and mechanical dimensions (from Lumileds, 2003a, 2003b).

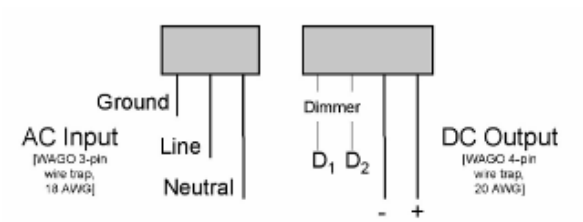

Figure 8. Wiring diagram of driver model LED120A0024V10D; top view of connectors (from Lumileds, 2003b).

Petitioner Hisense USA Corporation
Exhibit 1028 - Page 31 of 70

From reading the full set of specifications provided by the manufacturer (Lumileds 2003a, 2003b), it will be obvious to the reader that the driver selected has dimming capabilities. Dimming is not a function that is absolutely necessary for the objectives of the project; however, dimming was selected because it adds extra potential for energy savings that may be demonstrated in a future field installation of the LED luminaires.

The following sections contain detailed specifications and the rationale behind the selection of the driver.

Electrical requirements of the LED luminaire

As discussed in previous sections, the LED that seems most suitable for the prototype, considering the goals of Project 2.3 and the specifics of the application (elevator downlighting), is the Luxeon III Emitter, a 3W phosphor-coated white LED (Lumileds 2004).

In order to achieve the target light level in the elevator cabin, six luminaires are needed, each with six LEDs. The nominal forward current of the Luxeon III emitter is 700 mA. Given that all LEDs have slightly different voltage characteristics, the easiest and most efficient method to ensure that all six LEDs are driven at the exact same forward current is to connect them in series (Schie, 2004). With this in mind, a custom metal-core printed circuit board (MCPCB) was designed to house the six LEDs per luminaire. Figure 9 shows the schematics of the circuit configuration of the LED MCPCB.

The nominal forward voltage of the Luxeon III emitters is approximately 3.5 volts at a forward current of 700 mA. Therefore, the driver should be able to provide at least an open circuit voltage of 21 volts at the given nominal 700 mA forward current. The power consumption of the LEDs is anticipated to range from approximately 15 to 18 Watts, not including the losses of the driver. This estimate is based on laboratory measurements of LED samples available at the time of this report. Also, drivers and transformers usually perform more efficiently when the load factor is less than 100 percent. Therefore, if researchers assume a load factor of 70 percent, the driver should be able to provide and sustain an output power of 25 watts under all conditions present in the elevator downlighting application.

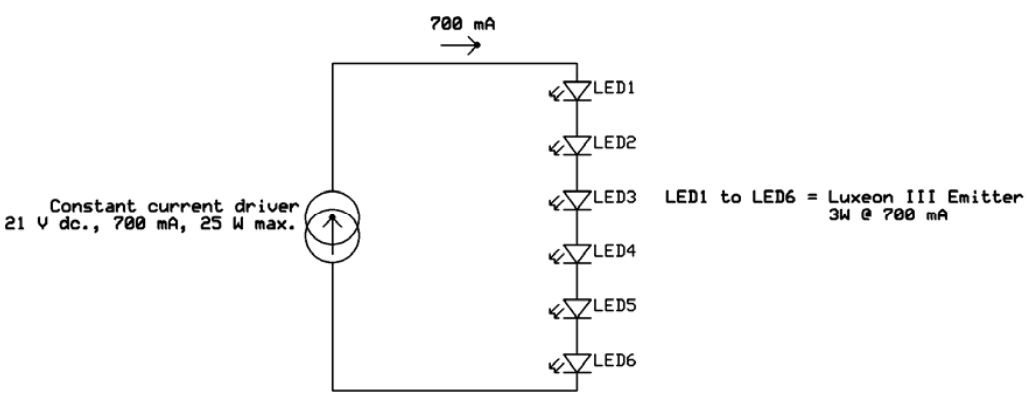

Figure 9. Schematic of the circuit configuration to drive the six Luxeon III emitters that will be used for the LED low-profile luminaire.

Petitioner Hisense USA Corporation
Exhibit 1028 - Page 32 of 70

The obvious choice for the procurement of such a driver for the LED luminaire is an off-the-shelf product. Among the many commercially available solutions of LED drivers, the model selected from Advance Transformer offers the best match to the requirements of the LED luminaire.

Efficiency requirements

As explained in more detail in the publication *Deliverable 2.3.1d-e-f – Final LED Specification Report*, the efficiency of the driver is one of the main factors affecting the overall efficacy of any luminaire system. The same publication outlines the required system efficacy of the LED luminaire to achieve the goals of this project (i.e., 25.8 lm/W).

To reach the required system efficacy, a driver with an efficiency of at least 90 percent is desirable. However, after looking into the commercially available options, the Xitanium series from Advance seemed to offer one of highest efficiencies with a nominal value of 80 percent. This does not imply that a higher efficiency is not practical or economically justifiable. Simply, at the time the driver was selected, it offered the best solution from a commercial driver that met the voltage, current, and power requirements of the LED luminaire. Some products offer an apparently higher efficiency, but that is measured at lower wattages and when operated in direct current circuits; that is, the losses of an alternating current to direct current interface are not considered.

Safety requirements

The main reason behind the selection of a fully packaged and commercially available driver, as opposed to a custom design prototype, was the need to test the LED luminaire in a field installation. The installation of the LED luminaire in a functional elevator required that all safety precautions were taken, including a secure and reliable connection to the power supply of the elevator.

The driver safety characteristics required for this field evaluation are similar to those needed for any other application; that is, a driver should be preferably UL Class 2 rated (see National Electrical Code; ANSI/NFPA 70; UL 1585 for more details), have short circuit protection, isolated output, and be rated for operation in ambient temperatures of approximately 40ºC. The selected driver features inherent short-circuit self-limited protection, overload protection, isolated output to 3.2 kV at 60 Hz, and is capable of operating in environments of up to 60ºC (with a maximum case temperature of 95ºC).

Mechanical requirements

The three most important mechanical requirements of the driver for the LED luminaire are overall physical dimensions (mainly reduced footprint and overall height), weight, and enclosure material.

Ideally, the low-profile LED luminaire will have a reduced profile of 1½ to 1¾ inches. Preferably, the selected driver should be no more than 1½ inches tall after considering mounting hardware. Advance Transformer's model Xitanium LED120A0024V10D has an overall height of 33 millimeters (1.3 inches), which is just below the target. **Figure 10** shows the footprint and overall dimensions of the selected driver.

Ideally, the LED luminaire should weigh the same as or less than typical incandescent luminaires used for elevator downlighting. The driver's weight is 140 grams (5 ounces). Such weight is

Petitioner Hisense USA Corporation
Exhibit 1028 - Page 33 of 70

minimal compared to the metal parts of the luminaire (i.e., reflector, heat sink, mounting hardware).

Finally, the driver should not have any exposed live parts and should have a suitable housing for installation according to the National Electrical Code. The enclosure of the driver selected is made of Noryl HS2000, a UL 94-V0 flame retardant rated material, which is suitable for this application.

Controllability requirements

There are no special controllability requirements for the field evaluation of the LED luminaire. However, anecdotal evidence indicates that there is a significant potential for energy savings in elevator applications since lighting operates 24 hours a day and is not responsive to occupancy patterns of the elevator. Therefore, it would be desirable that in real applications, the driver would be capable of interfacing with continuous or step dimming systems, occupancy sensors, load-shedding systems, and the programmable controls of the elevator cabin (Norris, 2004).

The selected driver has dimming capabilities within the range of 5 to 100 percent. Dimming is controlled by means of a 10 V dc signal available from many commercially available dimmers and controls systems. In reality, it is possible to interface the selected driver with almost any existing control system.

Reliability requirements

The reliability requirements for the LEDs selected for the low-profile luminaire were established as a desirable useful life of 40,000 hours. It is then desirable as well that the driver last at least as long as the LEDs in the luminaire (Norris, 2004). The selected driver has a lifetime of 50,000 hours and is offered with a 5-year warranty. Such lifetime is defined at 5 percent failures after 50,000 hours of operation. The selected driver seems a suitable option for this application.

Driver specification summary

Based on an evaluation of the attributes discussed above, the team concluded that an electronic dimming driver such as the one selected is suitable for commercial applications where white LEDs are desired for general illumination.

The Xitanium LED120A0024V10D from Advance Transformer was considered a suitable choice as the driver for the LEDs used for the low-profile luminaire. It is expected that in the near future more efficient drivers will become available, increasing the overall system efficacy of the LED luminaires. A minimum efficiency of 90 percent would contribute to a more attractive LED system for energy savings applications.

One driver is required per luminaire, given the type (high-power phosphor-converted white), number (six per luminaire), and power (3 watts per LED) of the LEDs in each luminaire.

Optical specification

The final part to be specified was the optical design of the low-profile LED luminaire. As explained in a previous section, the desired distribution of the low-profile LED luminaire was a medium to narrow distribution with a 26º beam angle. In the initial tasks of the project, different

Petitioner Hisense USA Corporation
Exhibit 1028 - Page 34 of 70

approaches to creating an efficient low-profile LED luminaire were taken. At first, red-green-blue (RGB) mixing was considered because of the potential for higher efficacy values. However, RGB is a rather challenging problem that presently results in higher optical loses. A parallel approach using phosphor converted white LEDs inside a reflector in an indirect fashion was considered as well. This approach was proven to provide different distributions by simply changing the geometry of the main section of the reflector, but it was not as efficient as was desired and had problems with glare. Although these two approaches ranked high on originality and potential to reduce the profile of the fixture to a minimum, they had to be dismissed because they did not seem to have the potential to reach the expected efficiency. A third approach, and the one selected for the low-profile LED luminaire prototypes, was the use of LEDs in a direct distribution mode, i.e., acting as a downlight.

Simulations of this approach showed the potential to reach the target optical efficiency of 90 percent. To reach this conclusion, the team performed different iterations of optical modeling, including tolerance analyses and validation using rapid prototyping techniques.

The team reached the conclusion that if an optical efficiency of 90 percent was required, then a material with a total specular reflectance of 90 to 95 percent was needed. Although this would not represent a problem for commercial mass-produced reflectors, achieving such a high reflectance for a few sample prototypes appeared to be extremely expensive.

Standard manufacturing processes for prototypes of reflectors do not guarantee such high reflectance values. The methods investigated include metal spinning and polishing, computer numeric control (CNC) machining and metal stamping using high reflectance aluminum. Other non-standard methods reviewed include plastic injection, stereo lithography, electro-deposition and three-dimensional printing methods with vaporized metallic coating or electroplating. A much more expensive but effective method to achieve high reflectance is diamond turning.

For the first prototype of the downlight reflector, a 3-dimensional printing method with a nickel-plated finish was selected. This option showed a reasonable compromise between cost and benefits. Diamond turning was not selected for the prototype because of the elevated cost.

Upon receipt and testing of this prototype, it was concluded that there was potential to manufacture a working low-profile LED luminaire with efficiency close to the target (**Figure 10**).

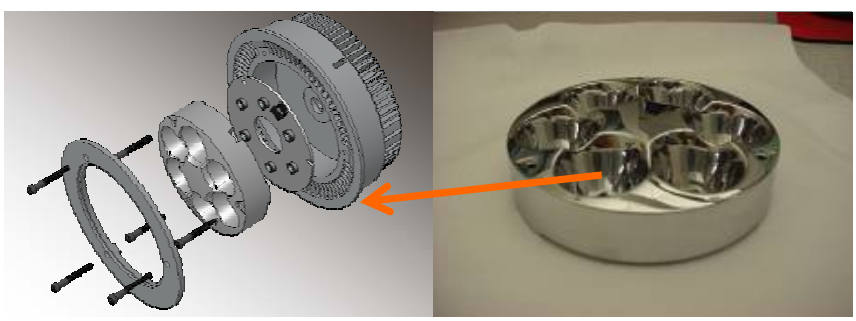

Figure 10. Depiction of the elevator downlight luminaire and first prototype of reflector only.

The two most important issues affecting the light distribution and efficiency of the reflector are the manufacturing tolerances (dimensions) and the absolute reflectance value of the coating. During the design phase of the reflector, a tolerance analysis was performed in order to understand the effects of these two variables. This analysis was necessary because even though

Petitioner Hisense USA Corporation
Exhibit 1028 - Page 35 of 70

standard mass-production manufacturing processes can provide high degrees of accuracy and precision, rapid prototyping methods cannot always guarantee equivalent results.

To estimate the effects of the tolerances in dimensioning, the reflector was modeled with a reflectance of 60 percent, which is representative of chrome plating and the actual value measured from the first prototype. The first series of calculations were performed for variations of the LED in the x-axis, as shown in **Figure 11**. It was estimated that a range of –1/16 to +1/16 of an inch was sufficient to cover the possible discrepancies between the specifications of the reflector and the actual prototype. The simulations show that while moving the LED further into the reflector cavity increases the efficiency from a nominal value of 72 percent to 74 percent, moving it further out decreases this value to 63 percent. The sensitivity to variations in the off center position (along the y-axis) is less, affecting efficiency by less than 1% when the LED is located 1/16” off center.

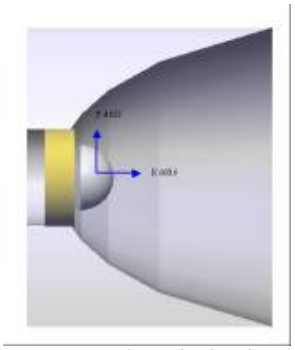

Figure 11. Schematic showing the two axes selected for the tolerance analysis. The LED was positioned from –1/16 to +1/16 of an inch along the x- and y- axes in 1/32” increments. The efficiency and light distribution were calculated for each position.

Regarding the beam distribution, the analysis shows that for the same range of positions along the x-axis the beam angle changes from a nominal of 19-degree half beam angle to 14-degree in the case of -1/16” and to 27-degree in the case of +1/16” (**Figure 12**).

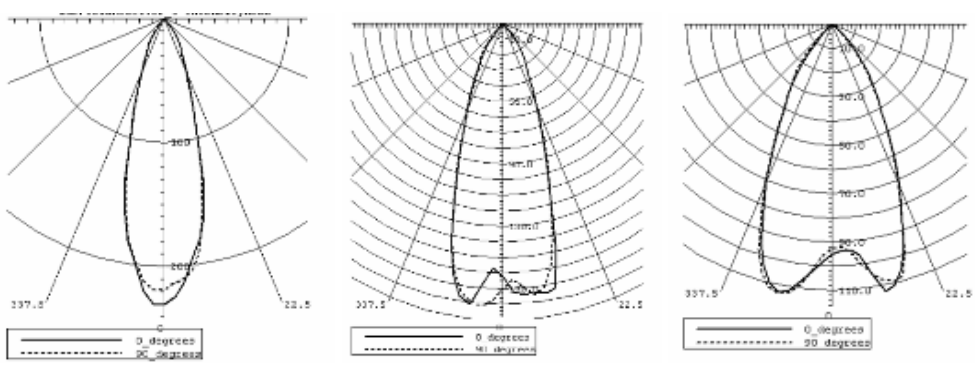

Figure 12. Intensity distribution of the modeled reflector for a reflectance value of 60 percent and LED positions -1/16” (left), 0” (center) and +1/16” (right) along the x-axis shown on **Figure 3**.

Similarly, the optical modeling activities showed that in order to be more efficacious than an incandescent luminaire, the low-profile LED luminaire should be designed to provide an efficiency of 90 percent.

Petitioner Hisense USA Corporation
Exhibit 1028 - Page 36 of 70

The tolerance analysis showed that, as expected, the shape of the distribution does not change significantly for varying reflectance from 60 to 95 percent, while the efficiency increases from 72 percent to a maximum of 97 percent (**Figure 13**).

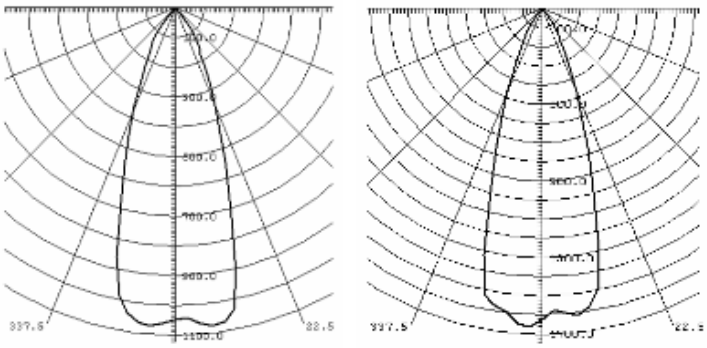

Figure 13. Intensity distribution of the modeled reflector for a reflectance value of 60 percent (left) and 95 percent (right).

This information was extremely useful in setting the optical specifications for the low-profile LED luminaire and in selecting the right manufacturing method for the prototypes that were to be used in the field evaluation.

The tests performed using the first prototype were useful to confirm the results of all the optical modeling performed during the early stages of the project. The efficiency and distribution were within the expected tolerances. This allowed the team to predict improvements and beam distributions by changing the material, finish, and shape of the reflector.

After the modeling activities were concluded, the specification of the reflector was defined mostly by its geometry (i.e., shape) and the finish of the reflecting surfaces. **Figures 14** through **18** show the geometry of the selected reflector. The material specified for the prototype was aluminum 1100 polished to a specular finish, with the understanding that the maximum achievable specular reflectance was 75 percent, which would limit the efficiency of the reflector to approximately 82 percent.

Low-profile LED luminaire specification summary

At the end of the optical analysis task, it was concluded that different lighting distributions (i.e., narrow or wide beams) could be easily achieved by modifying the geometric characteristics (i.e., shape) of the reflector. This was possible while keeping the low profile of the LED luminaire. However, it was also concluded that only one luminaire type was within the time and budgetary conditions of the project.

At the end of the analysis summarized in the previous sections, the project team concluded that the best way to show the benefits of LED technology in an elevator application was through the use of a downlight distribution, which is capable of providing the minimum horizontal light levels while creating a pleasing distribution on the rest of the elevator cabin. The selected distribution was a medium narrow beam, with a 26º half-beam angle. This distribution is similar to standard incandescent lamps used in elevator downlighting (i.e., MR16 and R20 lamps).

Petitioner Hisense USA Corporation
Exhibit 1028 - Page 37 of 70

Figures 14 through **18** show the schematics and **Table 3** lists the main photometric and electrical characteristics of the low-profile LED luminaires to be built for the field evaluation.

Petitioner Hisense USA Corporation
Exhibit 1028 - Page 38 of 70

Table 3. Photometric and electrical characteristics of the eight LED low-profile luminaires to be built for the field evaluation.

Photometric specifications	
Intensity distribution	Medium narrow, half bean angle of 26º
Reflector geometry	As shown in **Figures 1** to **5**
Total light output	300 lm per luminaire
Light source	Six Luxeon III emitters, 3W (Lumileds 2004)
Typical light output	65 lm (at 700 mA and at a junction temperature (JT) of 25ºC)
Average lumen maintenance	70% after 50,000 h of operation (at 700 mA and at a JT of 90ºC)
Correlated color temperature	5500 K
Color rendering index	70
Candlepower distribution	Lambertian
Electrical specifications	
Driver	One LED120A0024V10D (Lumileds 2003a, 2003b)
Input voltage	108 – 132 V ac, 60 Hz
Input power	2.9 – 31.9 W maximum
Input current	0.30 A maximum
Output voltage	10.4 – 24.6 V dc
Output power	2.3 – 25.5 W (dimming between 5% and 100%)
Output current	100 – 1050 mA ±5%
Efficiency	80% typical
Total harmonic distortion	20% maximum
Power factor	0.9 minimum
Current crest factor	1.5 maximum
Line regulation	1% output voltage variation across input voltage range
Load regulation	5% output current variation across load range

Petitioner Hisense USA Corporation
Exhibit 1028 - Page 39 of 70

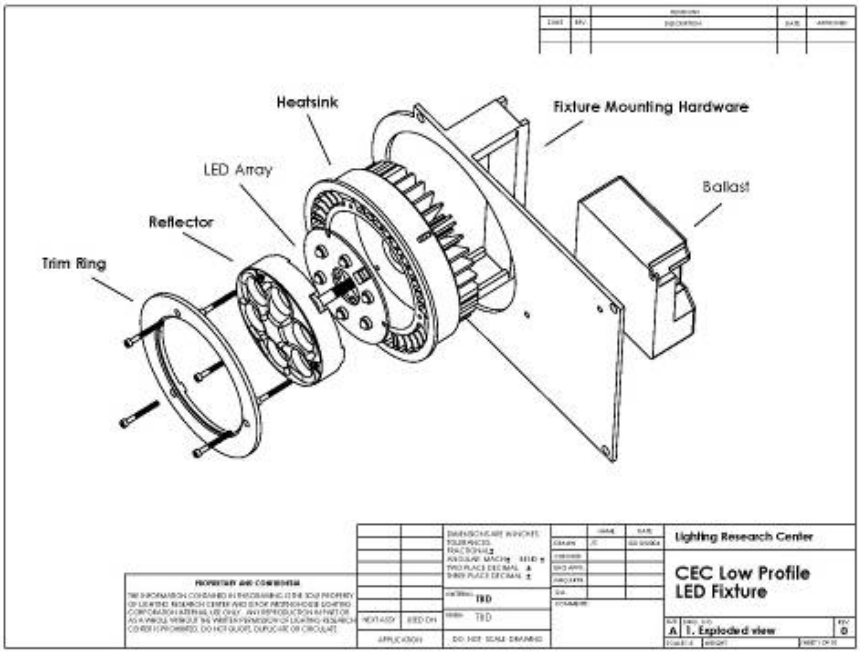

Figure 14. Exploded isometric view showing the main components of the low-profile LED luminaire.

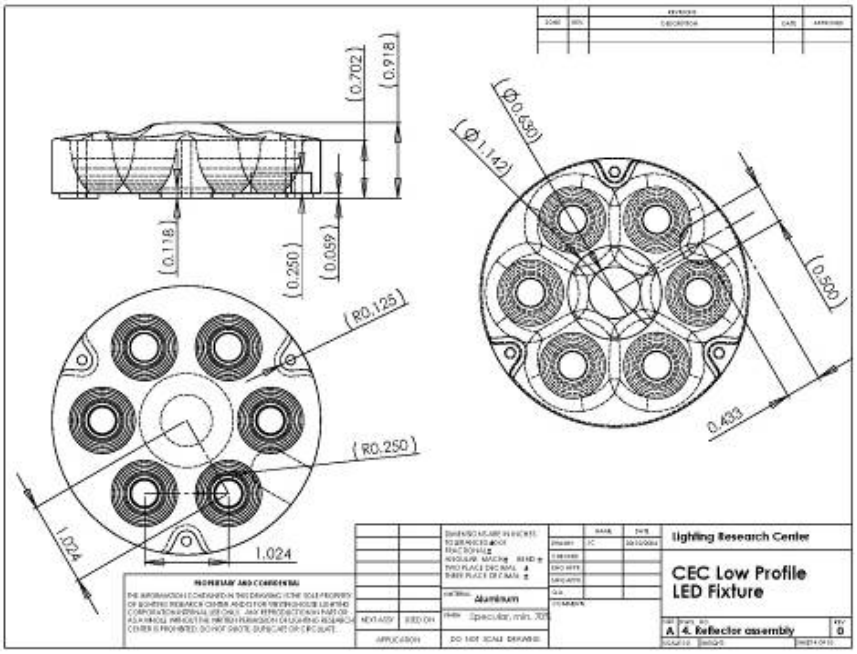

Figure 15. Dimensioned top, bottom, and side views of the reflector assembly. Note that there are six individual but identical reflectors, one per LED.

Petitioner Hisense USA Corporation
Exhibit 1028 - Page 40 of 70

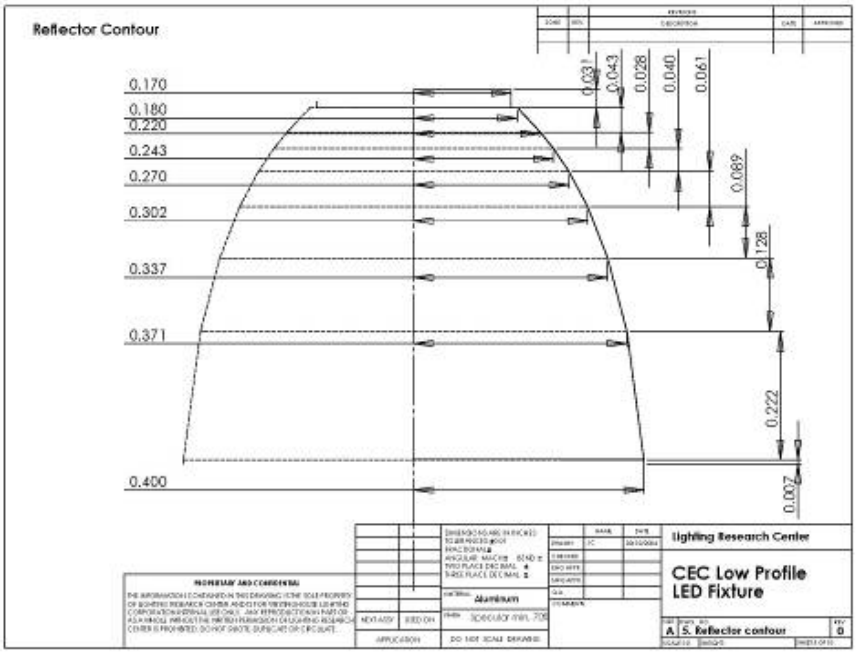

Figure 16. Detailed geometry with dimensions of one reflector.

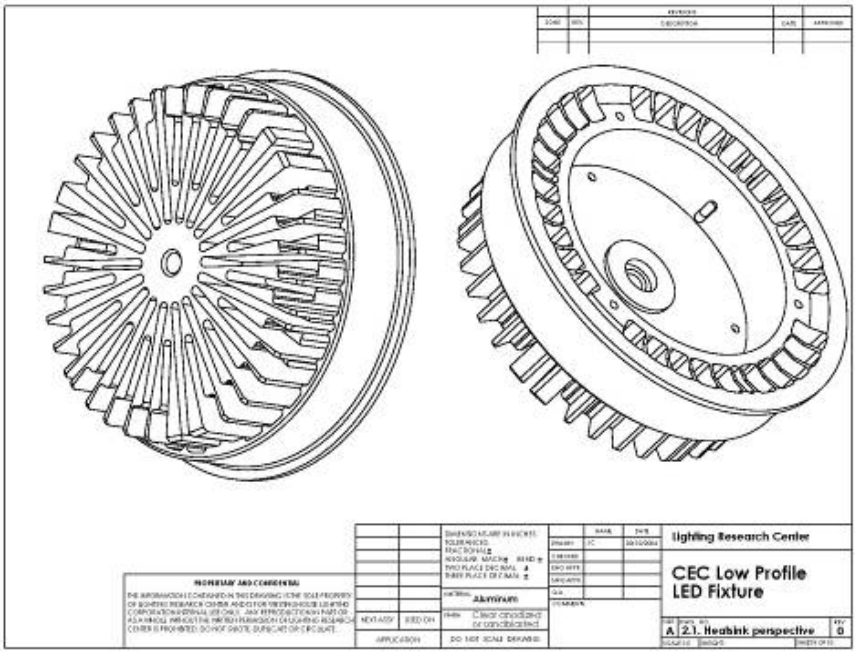

Figure 17. General isometric top and bottom views of the heat sink assembly.

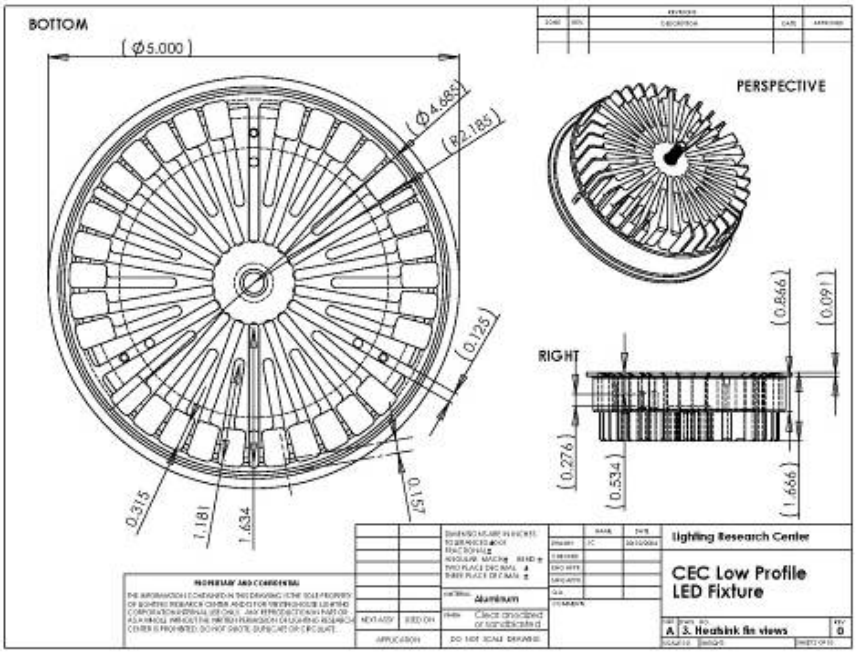

Figure 18. Dimensioned top and side views of the heat sink assembly.

Low-Profile LED Luminaires Evaluation Report

Introduction

The following sections provide the results of the evaluation of the prototypes built for this project against the criteria outlined in the previous section, including the laboratory (technical criteria) and the field (human factor criteria) evaluations.

Background and results of the measurements

Background

Ten prototype luminaires were received and prepared at the LRC for evaluation under laboratory conditions. For all of the technical evaluations, common laboratory testing practices were followed and high precision instruments were used when appropriate. Unless otherwise noted, the uncertainty in all measurements is assumed to be ±5%. The following parts were tested: thirteen 3W LED assemblies (each with 6 LEDs); two 5W LED assemblies (each with 6 LEDs); and ten reflector assemblies.

Results of the testing

Figures 19, **20**, **21** and **22** show general views of the components of the prototypes, including the heat sink, reflector, mounting hardware, and LED ring assemblies.

Figure 19. Mounting plate and additional heat sink (left and center), and side view with LED heat sink mounted in place (right). The additional heat sink was procured for the 5W LED assemblies and was not planned to be used in the field evaluation of the 3W LED assemblies.

Figure 20. Top, side, and bottom views of the LED heat sink.

Petitioner Hisense USA Corporation
Exhibit 1028 - Page 43 of 70

Figure 21. Top view of reflector (left), LED ring with six 3W Luxeon emitters (center), and bottom view of reflector.

Figure 22. Bottom view of the mounting plate with LED heat sink in place (left), LED ring mounted to the heat sink (center), and bottom view of the complete fixture (right).

Table 4 shows the photometric and electrical measurements taken from the prototype parts. LED assemblies 1 to 13 had 3W LEDs, whereas LED assemblies 14 and 15 had 5W LEDs. Only six 3W LED assemblies were necessary for the field evaluation. The 5W LED assemblies were tested to show the potential of the current technology in terms of efficacy. **Tables 5** and **6** show the efficacies of one 3W and one 5W LED assemblies, respectively, as a function of driving current. **Table 7** shows the efficiency of each one of the ten reflector samples tested. **Table 8** lists the colorimetric characteristics of the LED assemblies (CCT, CRI, CIE xy) and the board temperature at the time of the measurements.

Figure 23 shows the chromaticity coordinates listed in **Table 5** for the thirteen 3W LED assemblies.

Finally, **Figure 24** shows the intensity distribution of the low-profile LED luminaire and the existing incandescent 50W R20 lamp in the elevator cabin.

Petitioner Hisense USA Corporation
Exhibit 1028 - Page 44 of 70

Table 4. Photometric and electrical characteristics of the thirteen 3W LED assembly rings and two 5W LED assembly rings. Six 3W LED assemblies are necessary for the field evaluation. The 5W LED assemblies were tested to show the potential of the current technology in terms of efficacy.

LED assembly	Voltage (V)	Current (mA)	Power (W)	Luminous flux (lm)	Efficacy (lm/W)
1	22.0	700	15.4	281.9	18.3
2	21.9	700	15.3	282.1	18.4
3	21.6	700	15.1	275.1	18.2
4	22.0	700	15.4	275.9	17.9
5	21.8	700	15.3	273.4	17.9
6	21.9	700	15.3	272.5	17.8
7	22.1	700	15.5	276.8	17.9
8	21.8	700	15.2	270.8	17.8
9	22.1	700	15.5	277.6	17.9
10	22.0	700	15.4	271.7	17.6
11	22.1	700	15.5	272.9	17.6
12	22.0	700	15.4	285.3	18.5
13	22.1	700	15.5	276.1	17.9
14	39.4	700	27.8	709.6	25.5
15	39.7	700	27.5	693.7	25.2

Table 5. Photometric and electrical characteristics of one 3W LED assembly ring (assembly number 12 in **Table 4**) as a function of driving current.

LED assembly	Voltage (V)	Current (mA)	Power (W)	Luminous flux (lm)	Efficacy (lm/W)
12	20.0	300	6.0	161.3	27.0
12	20.5	400	8.2	197.4	24.1
12	21.0	500	10.5	227.6	21.7
12	21.4	600	12.8	253.9	19.8
12	21.8	700	15.3	276.4	18.1

Table 6. Photometric and electrical characteristics of one 5W LED assembly ring (assembly number 15 in **Table 4**) as a function of driving current.

LED assembly	Voltage (V)	Current (mA)	Power (W)	Luminous flux (lm)	Efficacy (lm/W)
15	36.7	300	11.0	379.6	34.5
15	37.3	400	14.9	462.8	31.0
15	37.8	500	18.9	533.2	28.2
15	38.2	600	22.9	590.1	25.7
15	38.4	700	26.9	631.7	23.5
15	38.7	800	31.0	660.6	21.3
15	38.9	900	35.0	663.5	19.0
15	39.3	1000	39.3	682.9	17.4

Petitioner Hisense USA Corporation
Exhibit 1028 - Page 45 of 70

Table 7. Efficiencies of the ten reflector assemblies received and tested. The six highest efficiencies are shown in **bold**.

Reflector assembly	Efficiency (%)
1	72%
2	76%
3	73%
4	74%
5	79%
6	71%
7	69%
8	69%
9	64%
10	63%

Table 8. Colorimetric characteristics of the thirteen 3W LED assemblies and board temperatures at the time of testing.

LED assembly	Correlated color temperature (K)	Color rendering index	CIE x	CIE y	Temperature of the board (ºC)
1	6319	64	0.310	0.384	59.6
2	6522	65	0.305	0.381	64.5
3	6501	65	0.305	0.383	60.7
4	6474	65	0.306	0.382	59.8
5	6427	65	0.307	0.385	60.5
6	6414	65	0.308	0.383	63.3
7	6536	65	0.305	0.382	57.3
8	6525	65	0.305	0.383	63.2
9	6528	65	0.305	0.382	60.7
10	6546	65	0.304	0.383	60.3
11	6503	65	0.305	0.383	60.6
12	6325	64	0.310	0.385	55.7
13	6594	65	0.303	0.381	62.8

Petitioner Hisense USA Corporation
Exhibit 1028 - Page 46 of 70

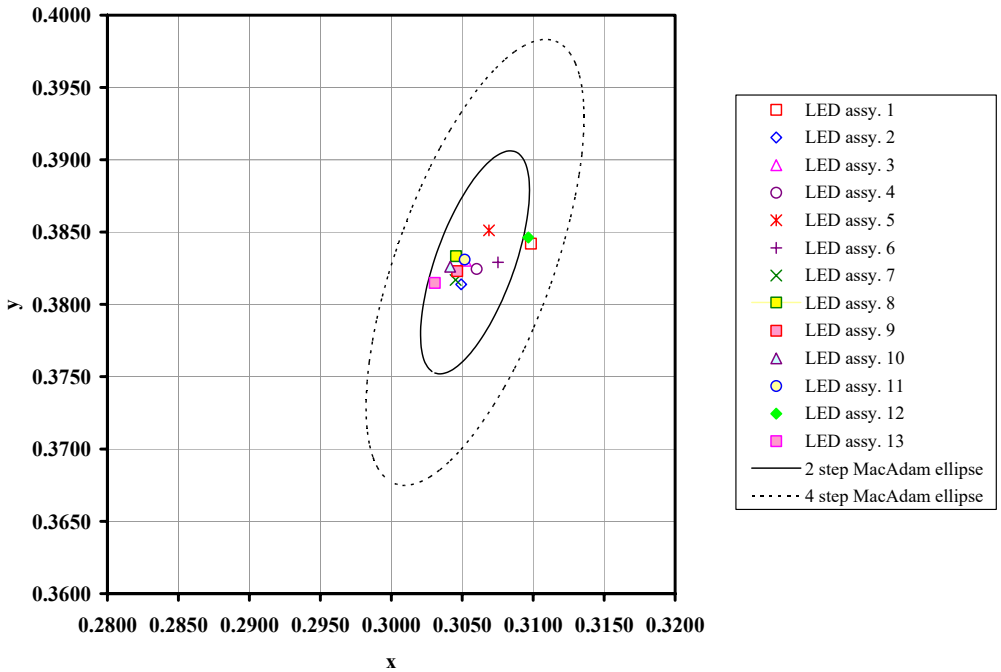

Figure 23. Chromaticity coordinates of the thirteen 3W LED assemblies tested. Also shown for reference are 2-step and 4-step MacAdam ellipses.

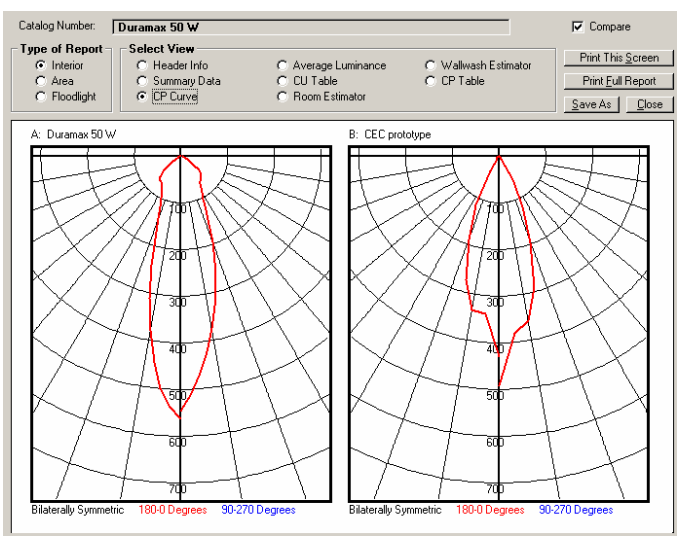

Figure 24. Intensity distribution of the low-profile LED luminaire (right) and the 50W R20 Duramax incandescent lamp existing in the elevator used for the field evaluation (left).

General performance of the LED low-profile luminaire prototypes

Technical criteria

Energy-efficiency criterion

The average efficacy of the thirteen 3W LED samples tested was 18 lm/W (**Table 1**). The average efficacy of the LED luminaires (i.e., factoring in the driver and reflector efficiencies) was 13.4 lm/W.

The lamps used in the elevator selected for the field installation are incandescent, R20, 50W, Duramax series from Philips Lighting. This type of lamp is rated at 389 lm and 50W when operated at 120 V. Therefore, the nominal efficacy of the incandescent lamps is 7.8 lm/W.

Although the original goal of efficacy was set at 25.8 lm/W, for the purpose of the field evaluation, the LED luminaire prototypes resulted in an efficacy 70 percent higher than that of the incandescent luminaire installed in the elevator selected for the study. However, **Table 3** shows that the original system efficacy target would be easily achievable by dimming the LED assembly to a point where it still produces sufficient light output for the application. In the case of LED assembly 15, by driving it at 300 mA, the light output is higher than the 30 lm desired and the efficacy is close to 35 lm/W. Note that, additionally, the operating board temperature would be significantly lower than at any other condition tested. This lower temperature would result in color and light output stability and potentially increased life. It is worth noting that 5W LEDs were not selected for the field demonstration because of their low rated life values of up to 1000 hours. Although expected to increase, it is not known what the effect in terms of life would be if these LEDs were driven at 300 mA.

Efficiency of the reflector

The goal was to achieve a reflector with an average efficiency of 90 percent. However, the best six prototypes ranged in efficiency from 71 to 79 percent (**Table 4**).

Although these values fall short of the goal, they can be easily explained by two main factors: first, the specified reflectance of at least 90 percent was not realizable from a practical and economical point of view for a few prototypes. Additionally, the prototypes tested were the result of one iteration, i.e., no refinement or second batch was possible given the time constraints of the project. It was expected that some differences in the geometry of the reflector would arise. To confirm this, the profile of the actual reflectors was measured and compared to the desired geometry. **Figure 25** shows the average difference found in the two innermost sections of the reflector. In the figure, the red line shows the specification and the blue line shows the average shape of the six reflectors. Although seemingly small, further simulations confirmed that such deviations from the specifications were sufficient to account for lower efficiencies and differences in beam distribution.

Petitioner Hisense USA Corporation
Exhibit 1028 - Page 48 of 70

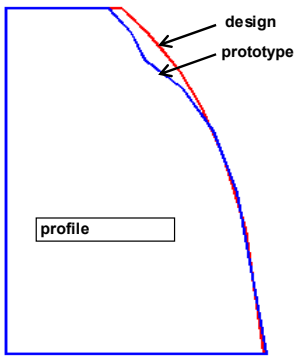

Figure 25. Differences in the profile of the specified reflector and the prototypes. The red line shows the specification, whereas the blue line shows the average profile of six prototype samples.

It is worth noting that for full production none of these issues would be a concern. Materials with high reflectance (of up to 95 percent) would be reasonably inexpensive and are readily available. Also, small tolerances in the manufacturing process, along with high repeatability can ensure that both the efficiency goal and desired beam distribution are achieved consistently.

Light output of the luminaire

The light output of the samples tested ranged from 270 to 285 lm, reasonably close to the target set at 300 lm. Again, small improvements in the efficiency of the reflectors would make it possible for the light output of the LED luminaires to reach 300+ lm. As explained in the field evaluation section, the light levels achieved with the low-profile LED luminaire were equivalent and slightly higher than those existing in the elevator were.

Light distribution of the luminaire

The intensity distribution of the low-profile LED luminaire differed from the specifications, but not considerably. As explained in a previous section, the manufacturing tolerances and differences in the shape of the reflector are the causes of such unexpected distribution. However, by comparing the actual distribution of the low-profile LED luminaire against the 50W R20 incandescent lamps existing in the elevators (**Figure 6**), it can be seen that the differences between the two are not cause of concern and that the maximum intensity is similar.

Color characteristics

The CRI and CCT properties of the LED samples measured are within the specifications of the manufacturer (Lumileds, 2003). However, it would have been desirable to have a slightly lower CCT (approximately 5500 K) and a slightly higher CRI (70).

Color consistency between LED units

As can be seen in **Figure 23**, all but two LED samples are within a two-step MacAdam ellipse. The two outliers are just outside the boundaries of the same ellipse. No visible difference in color is expected for any side-by-side comparison of LED luminaires.

Thermal criterion

The maximum temperature of the LED board during operation in open air (26°C ambient) measured after 2 hours of continuous operation was 54°C (see **Figure 26** for setup).

Petitioner Hisense USA Corporation
Exhibit 1028 - Page 49 of 70

Figure 26. Bottom view of the heat sink and reflector with LEDs turned on during temperature measurement in open air.

A second set of temperature measurements were taken during the light output and spectral measurements. For this second set of measurements, the setup was different since the reflector and heat sink assembly were always inside the integrating sphere. Additionally, the assembly was fixed to the sphere upside down, which could have prevented the heat sink from functioning as designed. For this set of data, the average temperature of the board was 60.7ºC (see **Table 5**). In either case, the performance of the heat sink was satisfactory at an average below the maximum allowed of 65ºC.

Lumen maintenance and life of the system criteria

Given the relative short duration of the project in comparison with the potential useful life of an LED system (up to several years), no formal evaluation was performed for these criteria. However, it is expected that the system would live up to the specified number of hours if proper thermal management is realized. An estimate of the junction temperature could be useful in determining if the system is expected to fail before its nominal useful life. Additionally, the installation should be monitored to ensure that no failures occur during the period of the field test.

Mechanical criteria

The two main mechanical criteria that should govern the evaluation of the low-profile LED luminaire are overall height and weight.

Overall height

The overall height of the luminaire was slightly less than 1½ inches, well below the objective of 2 inches. **Figure 27** shows a picture of the LED luminaire installed in a false ceiling. The potential for luminaires with a low profile is very promising, especially in applications where space is at a premium, such as elevators, transportation vehicles, low clearance buildings, etc.

Petitioner Hisense USA Corporation
Exhibit 1028 - Page 50 of 70

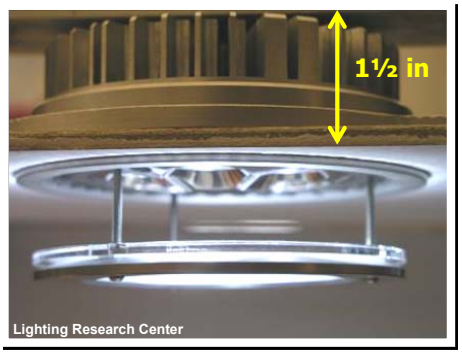

Figure 27. Side view of the low profile LED luminaire installed in a false ceiling. The clearance needed above the ceiling line is slightly less than 1½ inches.

A series of typical incandescent luminaires for elevator downlighting were selected from different manufacturers to compare dimensions. The luminaires selected range in height from 5 ½ inches to 7 ¾ inches, depending on housing characteristics. **Figure 28** shows the dimensions of three generic downlight luminaires for comparison with the low-profile LED luminaire.

Figure 28. Dimensions of three generic incandescent recessed luminaires. Corresponding dimensions are 9.5" W X 12.8" L X 5 ½" D with 3 ¾" cutout (left); 4" W X 14 ¾" L X 6 ¼" D with 3 ¾" cutout (center); and 5 ¼“ W X 14" L X 7 ¾" D with 5 ¼" cutout (right).

Overall weight

A simple set of weight measurements were taken to understand how the LED luminaire compares to similar incandescent luminaires.

The total weight of one prototype sample was 4 ½ pounds, broken down as follows:

- Reflector: one pound
- Heat sink: one and one half pounds
- Mounting hardware: two pounds
- Electronic driver: less than half pound
- **Total: 4 ½ pounds**

The typical incandescent luminaire selected for the previous comparison has an overall weight of 4 pounds, without lamp.

It is reasonable to expect that an optimized LED luminaire can weigh less than 4 pounds. Reaching that goal would not be difficult, since the reflector does not need to be made out of a

Petitioner Hisense USA Corporation
Exhibit 1028 - Page 51 of 70

solid piece of aluminum, and the mounting hardware could be similar to that of existing luminaires.

Human factors criteria – Field installation evaluation

Introduction

As mentioned in the preceding section, no lighting application could be considered successful if it did not directly address the needs of the people that use it. In general terms, the goal of this project was to demonstrate not only that an LED luminaire can realize energy savings, but that people respond positively to the technology in different applications. In this particular case, the human factors evaluation was made through a survey of elevator users where the LED luminaires were installed. By asking different questions, performance criteria such as visual performance, visual comfort, and overall appearance of the space and luminaires were evaluated.

In order to understand the possibilities for further energy savings by using control strategies, the traffic patterns of the elevator were studied. The traffic patterns were measured with occupancy sensors with logging capabilities. For comparison, the traffic patterns of the elevator at the LRC building were also measured.

Location of the field installation

The site selected for the field evaluation was the New York State Polymers Synthesis building at Rensselaer Polytechnic Institute's main campus in Troy, NY. This three-story building serves as a transition between two larger research buildings from the chemistry and material sciences departments. The main spaces of the building include administrative offices, meeting rooms and classrooms, research facilities, and common areas linking the two adjacent buildings. **Figure 29** shows the exterior of the building along with some photos of the lobby, adjacent areas to the elevator, and the interior of the elevator.

Existing conditions

The elevator cabin was found in good condition in general. The ceiling panel was equipped with six 50W R20 incandescent recessed luminaires, all in working condition. The existing average illuminance on the floor was 322 lx. The set of 12 measurements taken ranged from 270 lx to 350 lx. **Figure 30** shows the dimensions and finish of the main surfaces of the two-sided door elevator.

Petitioner Hisense USA Corporation
Exhibit 1028 - Page 52 of 70

Figure 29. Exterior of the New York State Polymers Synthesis building at Rensselaer Polytechnic Institute's main campus in Troy, NY (left), view of the elevator used for the study (top right), a view along the hallway leading to the elevator (middle right), and a view into the elevator cabin showing the existing incandescent lighting (bottom right).

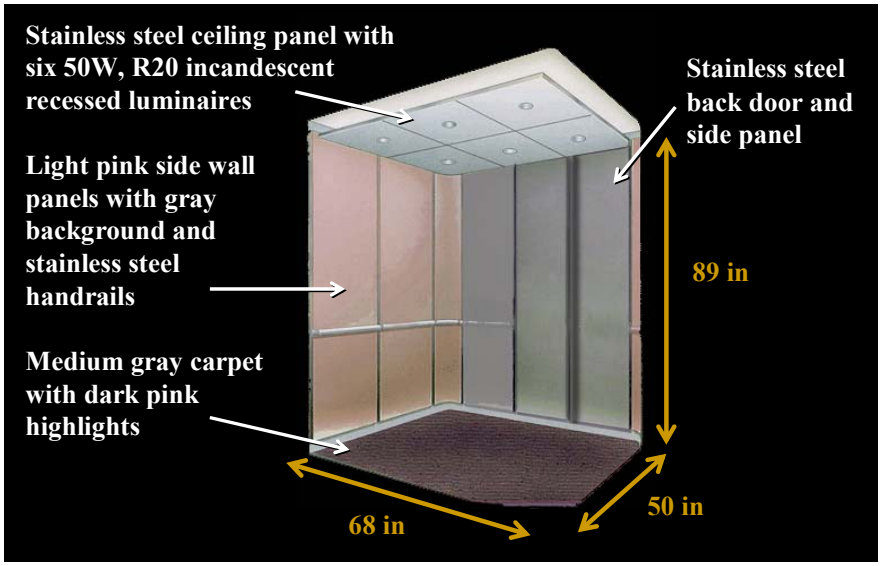

Figure 30. Schematic drawing of the existing conditions in the elevator cabin used for the low-profile LED luminaire field evaluation.

Petitioner Hisense USA Corporation
Exhibit 1028 - Page 53 of 70

Installation and survey

Replacement ceiling panel

In order to install the low-profile LED luminaire prototypes, a replacement ceiling panel was manufactured at the LRC. Building the ceiling panel required careful measurements of the existing panel to ensure compliance with the emergency hatch location and operability, as well to ensure that the new panel would fit in the elevator without further modification onsite. Otis personnel provided feedback and reviewed the final version of the ceiling panel before installation, giving full operational and passenger safety approval. **Figures 31** and **32** show the ceiling panel made to house the low-profile LED luminaires.

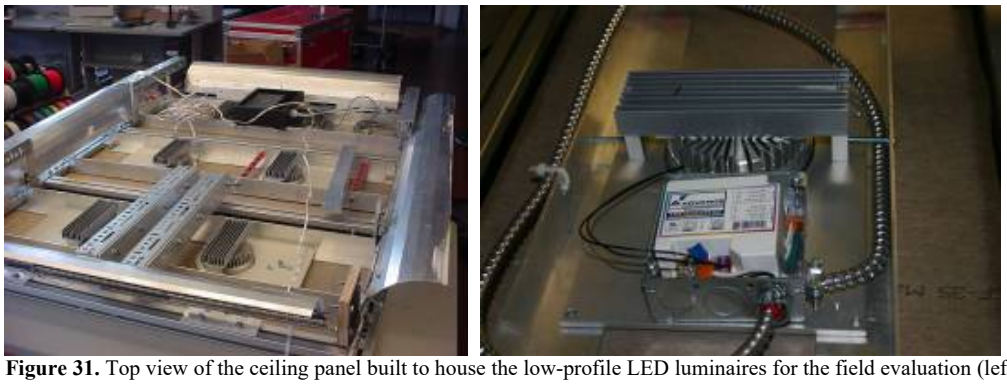

Figure 31. Top view of the ceiling panel built to house the low-profile LED luminaires for the field evaluation (left) and a close-up of one low-profile LED luminaire installed in the ceiling panel.

Figure 32. View from below the ceiling panel built for the field evaluation with the low-profile LED luminaires installed and functioning.

A maintenance crew from Otis installed the new ceiling panel with the low-profile LED luminaires on December 3, 2004 without any complication. Initial comments from people passing by and personnel from Otis were positive. **Figure 33** shows a photograph during the installation of the new ceiling panel.

The measured average illuminance on the floor was 350 lx. The set of 12 measurements taken ranged from 310 lx to 370 lx. The measurements were taken at the same points as with the incandescent lighting. A second set of measurements taken on January 26, 2005 showed similar values, confirming that there has been no depreciation of the installation.

Petitioner Hisense USA Corporation
Exhibit 1028 - Page 54 of 70

Figure 33. Photograph into the elevator cabin showing the existing incandescent lighting condition (left) and a photograph during the installation of the low-profile LED luminaires.

Survey

The objective of the survey was to determine the opinions of a group of users on the visibility, comfort, and attractiveness of the two different forms of elevator lighting under study (i.e., existing incandescent lighting and low-profile LED luminaires). Full approval from the Internal Review Board of Rensselaer Polytechnic Institute to perform the study was granted after a review of the objectives and methods of the experiment.

Method

Elevator users were recruited from the RPI campus on a volunteer basis to evaluate either the incandescent or LED lighting installation. After reviewing the questionnaire to be completed, each person was asked to ride on the elevator to the top of the building and down again, accompanied by the experimenter. After leaving the elevator, the user was asked to complete the questionnaire. On completion, the questionnaire was handed to the experimenter. As a reward for their participation, each observer was given a $2 credit on their Rensselaer Advantage Dollars account, valid at any RPI campus cafeteria, or a choice of a FM radio with a light, a safety whistle with light, or a flashing SOS red LED light. All subjects were free to withdraw from the experiment at any time simply by notifying the experimenter. In compliance with research standards, all original data collected during the experiment were treated as confidential and will not be disclosed to anyone outside the project team in such a way that an individual could be identified.

The survey had seven questions and a list of descriptors that people could use to generally describe their impressions of the space or the lighting itself. For each question, the observer gave a numeric rating from 1 to 5, where 1 was associated with the concept of *strongly disagree* and 5 was associated with the concept of *strongly agree*. At the end of the survey observers were asked to put a check mark next to the descriptors that they thought would be associated with the lighting condition they had just seen. The list of questions and descriptors is shown in the following section along with the results.

As of January 20, 2005, 64 users of the elevator had been surveyed, 32 for each lighting condition.

Results from the survey

Figure 34 shows the list of seven questions and descriptors in the survey used for the field evaluation. **Figure 35** shows the median subjective rating for each question and for each lighting

Petitioner Hisense USA Corporation
Exhibit 1028 - Page 55 of 70

condition. Median values were chosen over using the average because the ratings were not evenly distributed across the evaluation range; rather, they were skewed toward either end of the scale.

The results indicate that observers ranked the low-profile LED luminaire installation as consistently better, including questions regarding the color properties of the light. The exception was question 5, for which in both cases (incandescent and LED lighting) observers gave the same rating of disagreement (i.e., neither lighting condition was considered too bright).

During the design phase of the low-profile LED luminaire, the potential for glare was a constant concern under consideration. However, the results of this survey showed that the brightness of the low-profile LED luminaire was considered to be the same as the existing incandescent luminaire. From the photometric reports of either luminaire, it was observed that the maximum luminance was approximately the same (within 10 percent). The luminance calculations are approximations that were estimated based on the intensity distribution and apparent size of the reflector. It is worth noting that the cut-off angle of the low-profile LED luminaire is much lower than that of the incandescent luminaire. This seems to indicate that, possibly, when asked to evaluate glare, people did so by looking directly at the fixture when directly under it. These results also seem to indicate that a low-profile LED luminaire such as the one used in the evaluation, if designed properly, would not be considered a glare source.

To further understand the results of the survey, a statistical analysis was performed on the subjective ratings. The results of such analysis showed statistical significance in questions 1 through 4 and 6 and 7 to a criterion p of less than 0.05. In other words, the analysis indicated that there is a probability of less than 5 percent that the difference in ratings between incandescent and LED lighting is due to chance.

Questions	
1. When the doors opened, there was enough light to see the inside of the elevator well	
2. Inside the elevator, there was enough light to see other people well	
3. Inside the elevator, the details of the control panel were easy to see	
4. Inside the elevator, there were shadows on the faces of other people	
5. The light fixtures in the elevator were too bright.	
6. I liked the color of the lighting in the elevator.	
7. Overall, the lighting in this elevator was comfortable.	
Descriptors	
Ugly	Beautiful
Dirty	Expensive
Unattractive	No response
Cheap	Attractive
Uncomfortable	Stylish
Dark	Bright
Old-fashioned	Visually cool
Soft	Clean
Harsh	Comfortable
Visually warm	Modern
Ordinary	

Figure 34. List of questions and descriptors included in the survey used for the field evaluation.

Petitioner Hisense USA Corporation
Exhibit 1028 - Page 56 of 70

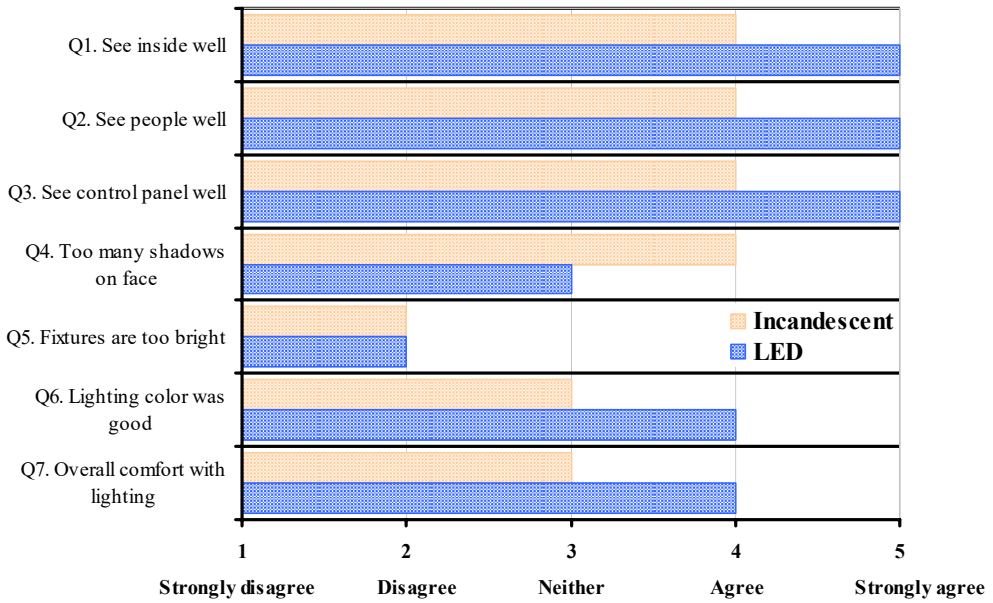

Figure 35. Median subjective rating for each question asked to the users of the elevator for each lighting condition under study. The number of observers for each lighting condition is 32. See **Figure** 34 for a list of the questions on the survey.

Figures 36 and **37** show the percentage of observers that selected each descriptor under each lighting condition. These graphs indicate that the users of the elevators consistently associated descriptors such as stylish, attractive, bright, clean, and comfortable with the low-profile LED luminaire condition. On the other hand, observers consistently chose descriptors such as dark, old-fashioned, harsh, and ordinary with the incandescent condition.

Additionally, comments volunteered by the observers were collected on the back of the surveys. A list of representative comments for each lighting condition follows:

Comments made about the incandescent lighting condition

- Lighting too pointed (directed). There should be more ambient light. But keep the color and lower the brightness.
- Too dark, should be brighter and more like the outside lighting because the change is too drastic coming in from outdoors.
- I don't pay too much attention.
- It seemed very yellow.
- Low contrast of buttons, there are reflections on the stainless steel.
- The light created a yellow glow inside the elevator.
- The lighting seemed a bit too yellow.

Comments made about the LED lighting condition

- Slightly bluish tint to the elevator even though the light generated is white. Not necessarily a negative, but possibly an interesting side effect of the LEDs.
- I liked the blue a lot.
- Great lighting.

Petitioner Hisense USA Corporation
Exhibit 1028 - Page 57 of 70

- Liked the lighting very much.
- It looks really nice. I like the red green blue effect on the metal.
- I liked the shadows cast on the back of the elevator by the RGB lights.
- I thought the level of lighting was nice, but it was not very well distributed throughout the elevator.
- Much improved!

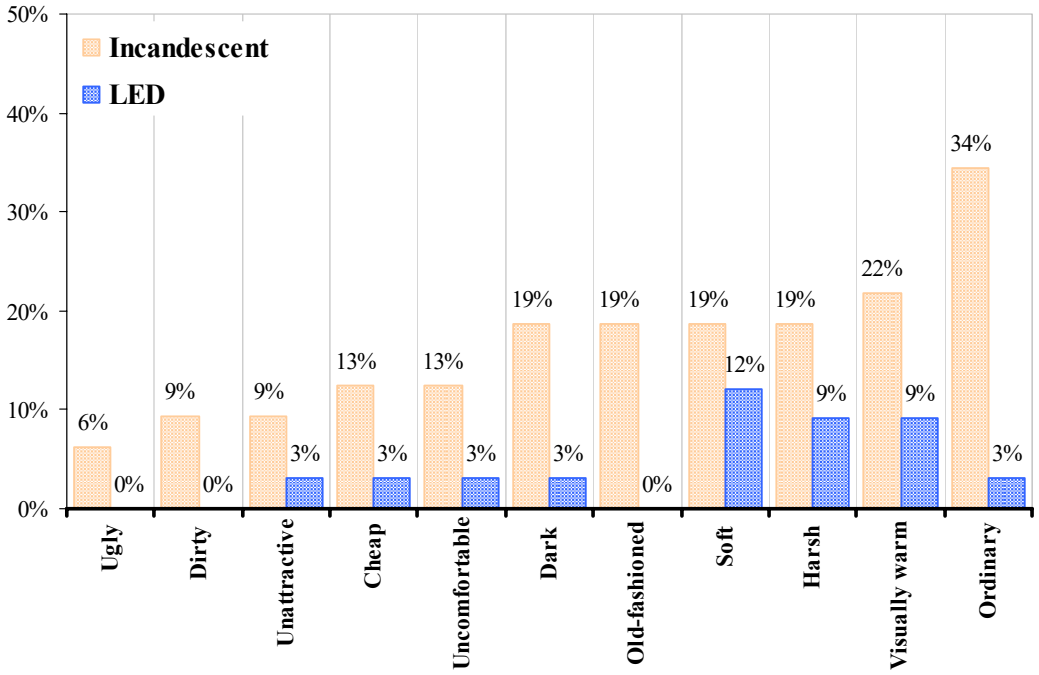

Figure 36. Percentage of observers that associated the descriptor on the horizontal axis with either lighting condition. The number of observers for each lighting condition is 32.

Petitioner Hisense USA Corporation
Exhibit 1028 - Page 58 of 70

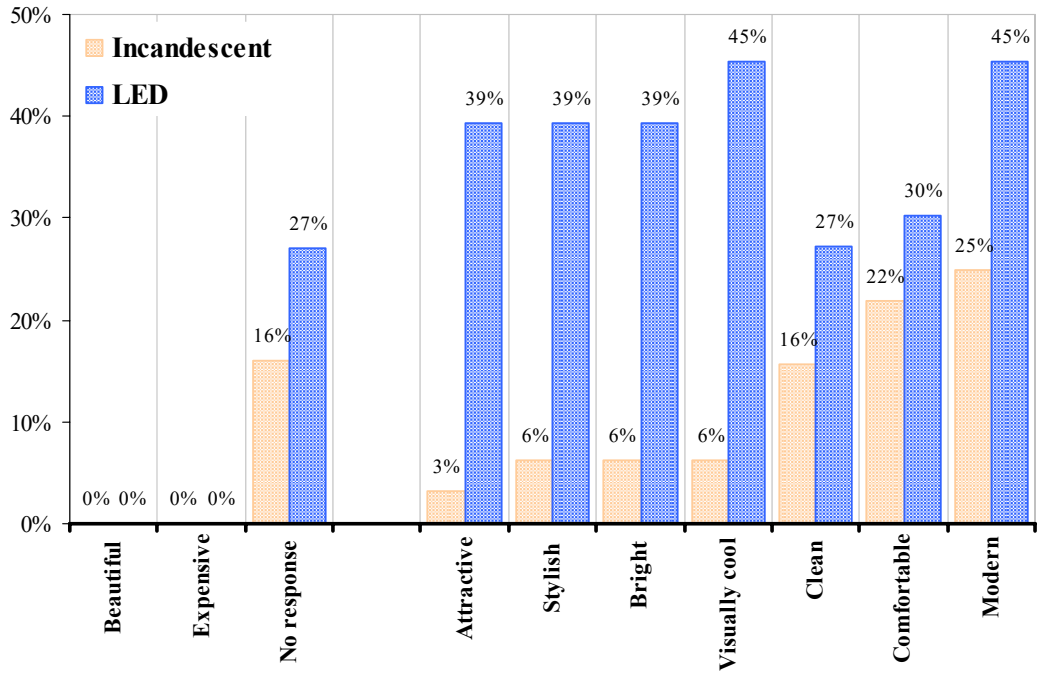

Figure 37. Percentage of observers that associated the descriptor on the horizontal axis with either lighting condition. The number of observers for each lighting condition is 32.

Petitioner Hisense USA Corporation
Exhibit 1028 - Page 59 of 70

Elevator Traffic pattern study

In the interest of learning more about potential opportunities to save energy in elevator lighting applications, the patterns of usage of two elevators were studied. The first elevator studied was the same one used in the field installation; the second elevator studied was the one in the LRC building.

A logging occupancy sensor was used in both elevators for a period of three to four weeks. The sensor detected and stored every time a person (or persons) entered the elevator, basically indicating how much time the elevator was used each day. Knowing that the lighting inside an elevator is operational 24 hours a day, the potential for energy savings by using controls can be estimated from the information given by the occupancy sensors. The information from each sensor is presented in the following figures, where each trip on the elevator lasts less than one minute.

Lighting Research Center building

Figure 38 shows the number of elevator trips per day during the period of November 30, 2004 to December 28, 2004 at the LRC building. **Figure 39** shows the number of elevator trips per hour for Monday, December 6, 2004. **Figure 40** shows the same profile for Monday, December 6, plus the average profile after averaging the data across the weekdays (Monday to Friday) of the week of December 6 to 10, 2004. Finally, **Figure 41** shows the cumulative percentage of usage for a given day of the week.

Polymer Synthesis building

Similarly, **Figure 42** shows the number of elevator trips per day during the period of December 8, 2004 to January 13, 2005. **Figure 43** shows the cumulative percentage of usage per hour in an average week of the two elevators under study.

Petitioner Hisense USA Corporation
Exhibit 1028 - Page 60 of 70

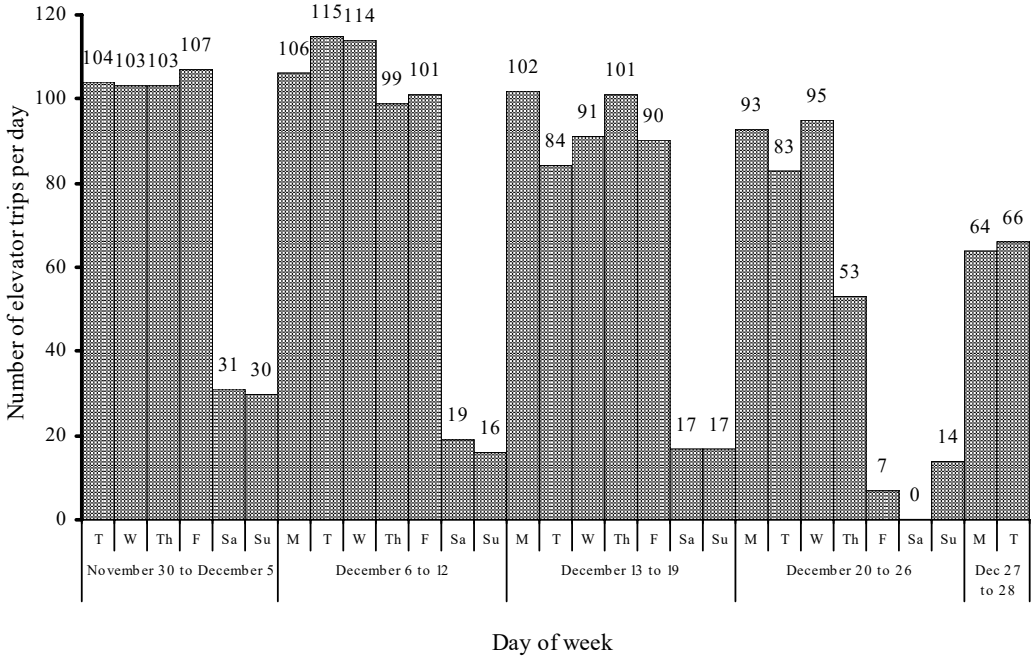

Figure 38. Number of elevator trips per day of the week for the period November 30, 2004 to December 28, 2004 at the LRC.

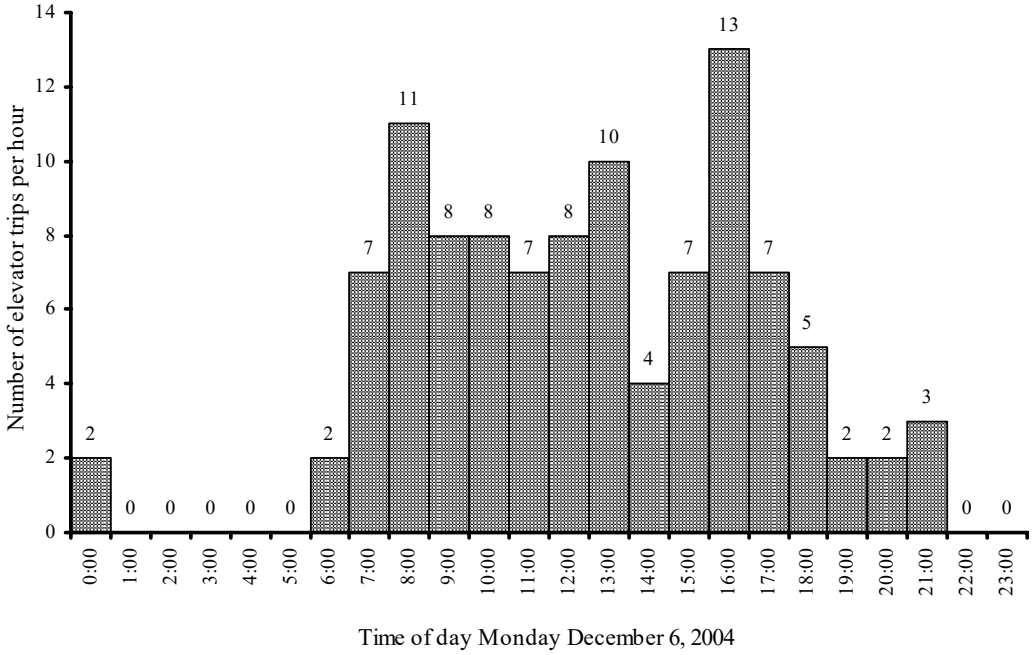

Figure 39. Number of elevator trips per hour for Monday, December 6, 2004 at the LRC.

Petitioner Hisense USA Corporation
Exhibit 1028 - Page 61 of 70

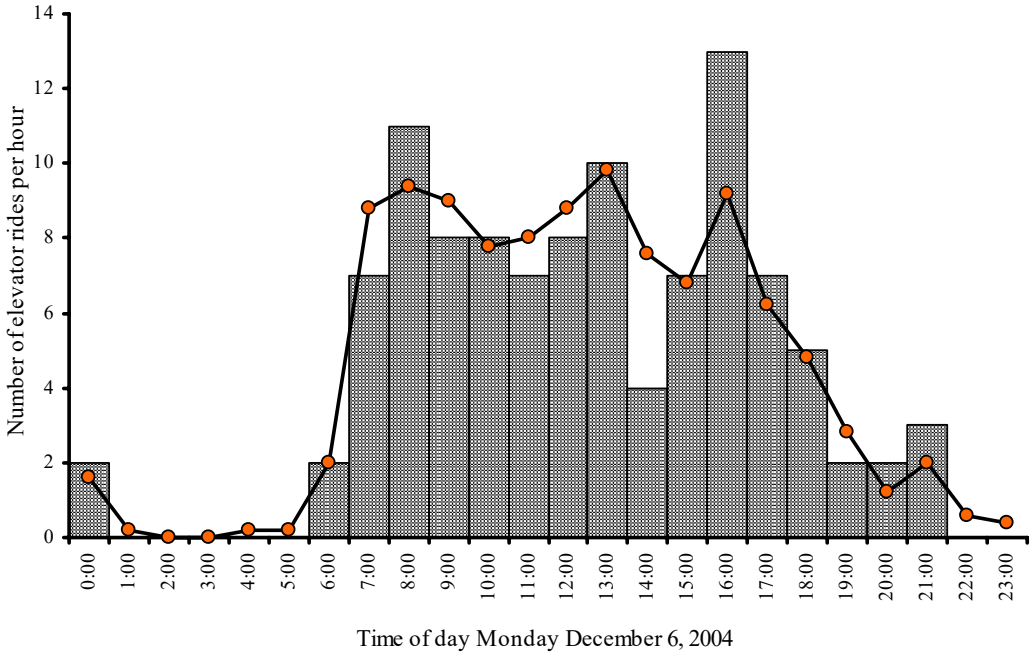

Figure 40. Number of elevator trips per hour for Monday, December 6, 2004 (bars) and average number of trips for the week of December 6 to 10, 2004 (line and circle markers), at the LRC.

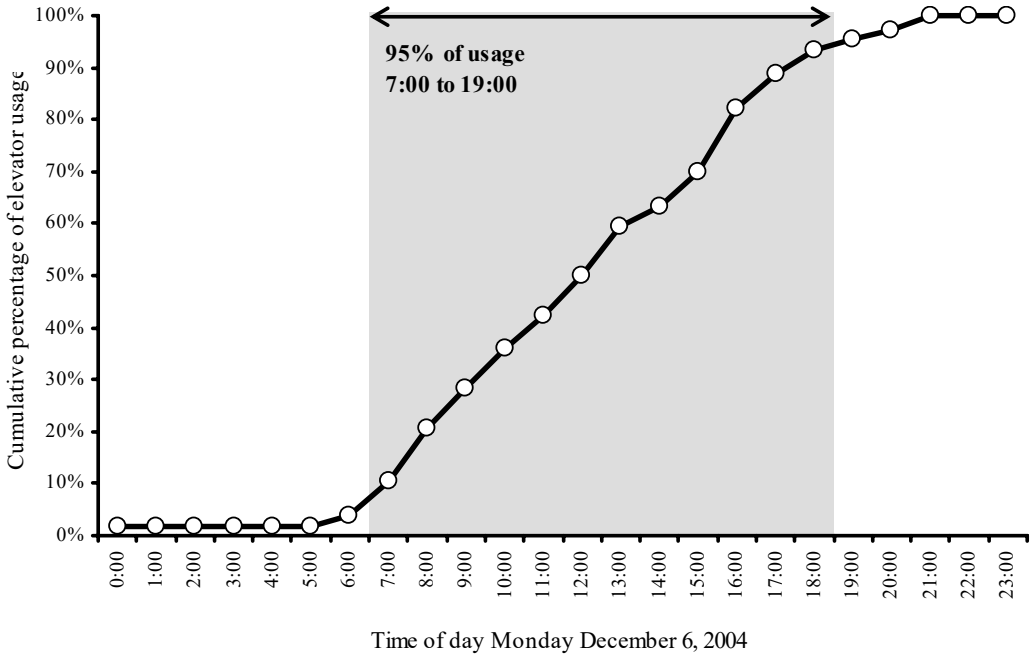

Figure 41. Cumulative percentage of elevator usage per hour for Monday, December 6, 2004 at the LRC.

Petitioner Hisense USA Corporation
Exhibit 1028 - Page 62 of 70

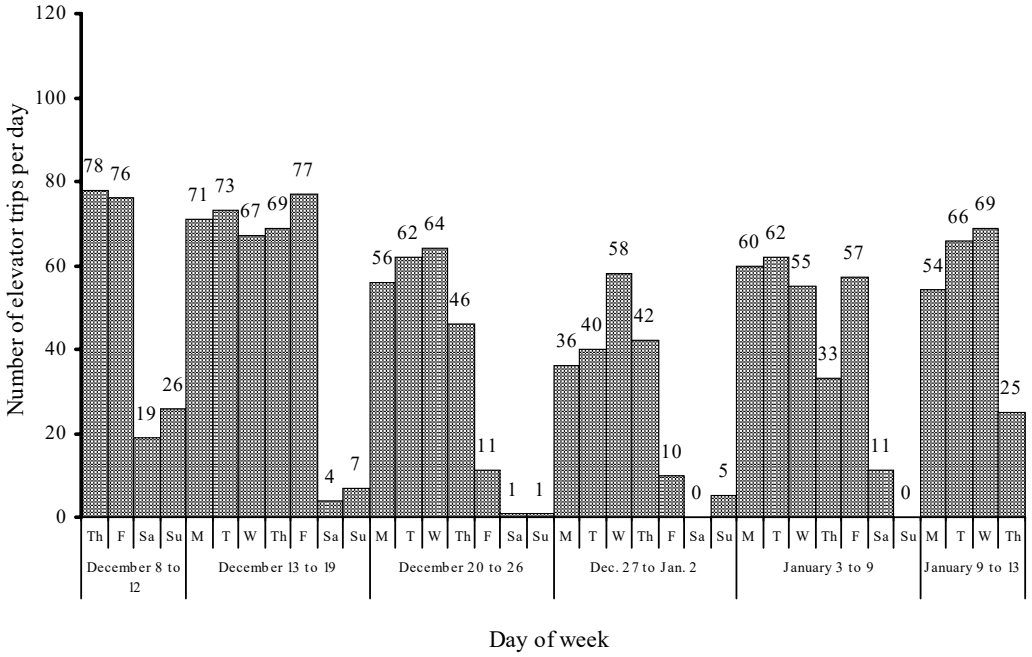

Figure 42. Number of elevator trips per day of the week for the period December 8, 2004 to January 13, 2005 at the Polymer Synthesis building.

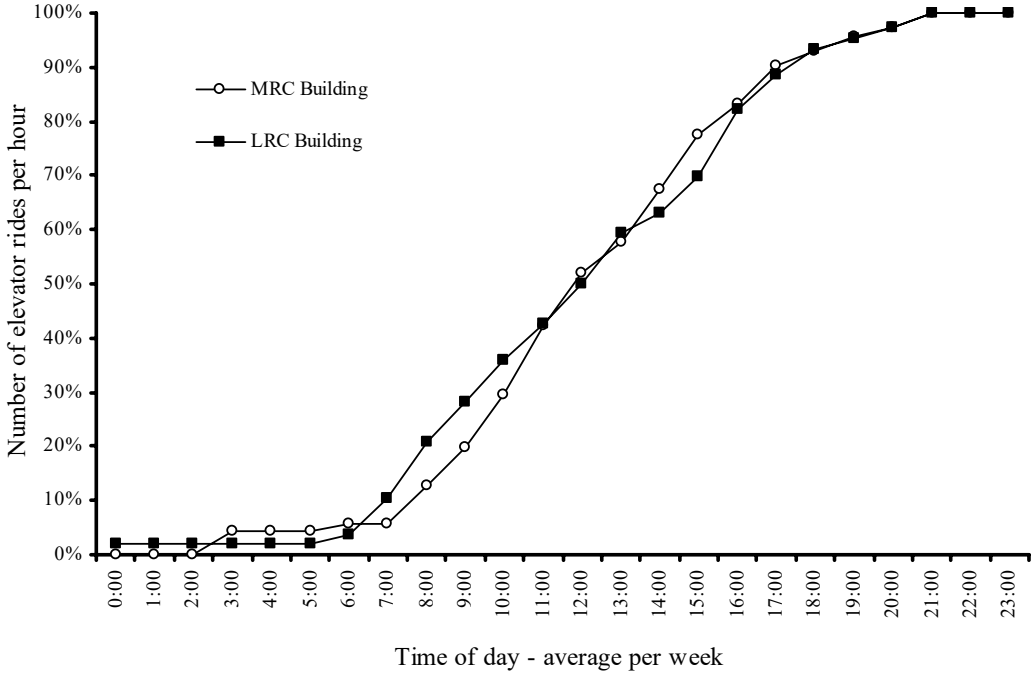

Figure 43. Comparison between the cumulative percentage of elevator usage per hour for a given week at the LRC (filled square markers) and at the Polymer Synthesis building (empty circle markers).

Petitioner Hisense USA Corporation
Exhibit 1028 - Page 63 of 70

The obvious observations from the data collected are that there seems to be a fairly constant pattern of usage across the days of the week, and therefore a predictable pattern of usage. In other words, any day of the working week can be used to describe the rest of the days (as shown in **Figure 40**). Second, as expected for a building with working hours of 8:00 AM to 5:00 PM, 95 % of the elevator trips occur within the hours of 7:00 AM and 7:00 PM.

By comparing the graphs from two buildings, it becomes apparent that the absolute number of elevator trips is different, but the cumulative pattern is basically the same. Notably, it is the same for all days of week except Saturday in both cases (graph not included).

Considering that each elevator trip lasts up to one minute (in the logs, more than 98 percent of the trips lasted less than one minute), it can easily be shown that the average usage of the elevator can be as low as 1 percent (on Sundays for example) and approximately 5 to 10 percent during the rest of the weekdays. This in turn would mean that approximately 90 percent of the energy used for elevator lighting could be saved if an appropriate control system were used. On a more conservative side, it would be reasonable to achieve 75 percent savings if, for practical reasons, the elevator were to be always with functional lighting. In this case, the minimum light level recommended of 3 fc on the floor could be used, and upon a user calling the elevator, the lighting would increase to the desired light level.

Conclusions of the low-profile LED luminaire evaluation

A successful set of prototypes was manufactured and tested under laboratory and field conditions. The ten samples showed some deviation from the specifications, but in every case it was within reasonable expectations for a first iteration of a prototype; there is no reason to believe that any problems would be encountered in mass production. The differences in performance were investigated and the causes identified, concluding than in most cases manufacturing tolerances (due to practical and budgetary constraints) were the cause for the differences.

The field evaluation of the low-profile LED luminaire succeeded in demonstrating both overarching goals of the project. The energy savings target of 20 percent was surpassed and a reduction of 45 percent was demonstrated. Equally important is the fact that observers surveyed about the existing and new LED lighting conditions consistently preferred the LED lighting condition. The difference between the two lighting conditions was found to be statistically significant.

Finally, learning about and quantifying the traffic patterns of two elevators was an equally important contribution to the goals of this project. The potential for energy savings by using control strategies that match the traffic patterns of elevators is a great opportunity that ought to be addressed in future research projects.

Petitioner Hisense USA Corporation
Exhibit 1028 - Page 64 of 70

Commercialization Potential

At the end of Project 2.3 it was clear that the low-profile LED luminaire was ready to be commercialized as demonstrated. The laboratory evaluation showed that an optimized low-profile LED luminaire could easily reach the original target of 25.8 lm/W and the field evaluation showed that people do not have any objection against this new technology. During the course of the project, and thanks to the feedback from all manufacturers contacted, it was apparent that there is a commercial niche for this project, enough technical potential, and at least one manufacturer (Westinghouse Lighting Corporation) interested in seeing this product into the market.

Traditional lighting luminaires are the product of design cycles taking up to five years, with three years being a reasonable average. It is expected that full development of the low-profile LED luminaire could take at least one to three years more. It would be understandable if such a design cycle were to be closer to the five-year mark, given that LEDs are a new technology for traditional lighting manufacturers. New processes, new tooling, and new knowledge have to be assimilated by the manufacturer in order to make a successful product.

Given the early stages of development of this project, it was clear that the market transformation and technology transfer activities would be limited in scope. As an initial step, a description of the elevator industry along with the feedback of two of the main manufacturers are included in this report. A brochure describing the project and the results of the field evaluation has been produced to aid in promoting the PIER program and the results of this project.

Petitioner Hisense USA Corporation
Exhibit 1028 - Page 65 of 70

Project Outcomes

The research resulting from this project successfully met the objectives outlined at the beginning of this report. The main outcomes of this project are the following:

- Designed, optimized, built, and tested prototypes of low-profile LED luminaires for an elevator downlighting application
- Installed and field-tested the low-profile LED luminaire prototypes
- Collected information on users' reactions and elevator traffic patterns to make recommendations for control strategies that would result in higher energy savings
- Collected market information from the elevator industry and gathered feedback from two elevator manufacturers and four lighting equipment manufacturers
- Achieved an efficiency for the low-profile LED luminaire that was at least 40 percent higher than the incandescent baseline (i.e., the existing lighting in the elevator used for the field test)
- Designed and added decorative sparkle elements to increase the acceptability of the low-profile LED luminaire

Petitioner Hisense USA Corporation
Exhibit 1028 - Page 66 of 70

Recommendations and Conclusions

Recommendations

Based on the positive results of this project, the LRC researchers believe that there are several venues to build upon the achievements of Project 2.3.

It would be important, for example, to learn more about the traffic patterns in elevators in different building types. Characterization of traffic patterns in retail, high-rise residential, hotels, schools, hospitals, and malls could yield considerable savings in the near term by allowing the correct use of control strategies that would match the different needs of each one of these applications.

Anecdotal evidence and personal observations indicate that presently most elevators appear to be overlit. Current lighting recommendations do not match the reality of many applications, resulting in energy waste. Understanding the absolute light level needs of different applications would further increase the potential energy savings by using only the amount of light required and not more. This is another important area of research that would benefit from funding.

During the process of this project, several applications were selected based on the promise to save energy in the near term. Allocation of funds to further develop applications such as museum lighting and jewelry display cabinets most likely will result in two more opportunities to save energy by using low-profile LED luminaires.

Finally, it would be important to continue the research in the low-profile LED luminaire area regarding the design of a custom but more efficient driver with dimming and load-shedding capabilities, and, most importantly, the interconnection with the controls of the elevator cabin to take advantage of the large potential for savings during the time the elevators are idling.

Benefits to California

According to the most current information found in the listed references (US Census Bureau, 2005; Elevator World, 1996), there are approximately 653,000 functional elevators in the United States. The best estimate of the number of elevators in the state of California was approximately 85,000. Assuming that only 50 percent of the elevators are currently illuminated by incandescent lighting and that 50 percent of those elevators are retrofitted with LED technology, the annual energy savings could amount to 28,000 MWh (assuming a conservative 25 percent savings). If a control system were included during the retrofit to minimize the lighting when the elevator is not in use, then the savings could add up to 63,000 MWh per year.

Conclusions

The main conclusions resulting from the research of this project are the following:

Project 2.3 successfully demonstrated that it is possible to obtain at least 20 percent energy savings by using LED technology to substitute incandescent downlights in elevator applications. This project not only showed that for the same light level the energy savings could be as much as 45 percent (such as in the field installation), but that there is a significantly larger potential for energy savings by using the appropriate control strategies.

Petitioner Hisense USA Corporation
Exhibit 1028 - Page 67 of 70

The results of the field evaluation showed that on average a typical university-based building with one elevator could save at least 75 percent of the energy used for lighting in the elevator cabin with the use of appropriate control strategies.

The project showed that LED technology is reaching sufficient maturity to be used in general lighting applications such as elevators and display cabinets. From the samples evaluated, it was obvious that the efficacy of phosphor-converted white LEDs is beyond that of incandescent and halogen lamps. Commercial samples evaluated during the process of this project showed efficacies of up to 35 lumens per Watt when driven below their nominal operating current, which has the added benefit or lower operating temperatures. In the past twelve months, manufacturers and research laboratories have demonstrated efficacies as high as 75 lumens per Watt for low power devices and up to 56 lumens per Watt for high power devices, confirming that in the near future LEDs will have efficacies and light output packages high enough to be used in many more general lighting applications.

Additionally, the field evaluation showed that LED technology is accepted positively by the end user when designed carefully to match the needs of the application.

The low-profile LED luminaire designed for this project successfully demonstrated that LEDs are a viable technology to achieve energy savings in the State of California while providing a lower total cost of ownership to building owners.

At the end of Project 2.3, there was enough interest from at least one manufacturer in the commercialization of this product.

LEDs are ready for different applications. If the needs of the application are understood and matched with the qualities of the technology, then successful applications are guaranteed. This particular low-profile LED luminaire was designed on a retrofit basis for the purpose of the field evaluation. The LRC team is confident that even higher energy savings could be realized if the lighting of the elevator cabin, as a unique solution, could be designed based on the specific elevator cabin conditions.

Petitioner Hisense USA Corporation
Exhibit 1028 - Page 68 of 70

References

Otis Elevator Company. 2004. OTIS Elevator and Escalator Planning and Selection Guide.

Dixon, R. 2002. HB-LEDs continue progress towards solid-state lighting. *Compound Semiconductor* 8(4): 49-53.

Elevator Industry Statistics. 1998. Internet: http://www.elevator-world.com/magazine/archive01/9810-003.html-ssi.

Elevators & Escalators to 2007: Market Size, Market Share, Market Leaders, Demand. August 2003. Internet: http://www.freedoniagroup.com/Elevators-And-Escalators.html.

Howlett, O. 2004. The Heschong Mahone Group. Personal communication, June 25, 2004.

KONE. n.d. Internet: http://www.kone.com. Accessed December 21, 2004.

Lighting Research Center. 2004. *Developing color tolerance criteria for white LEDs.* Draft report to the Alliance for Solid-State Illumination Systems and Technologies, submitted January 26, 2004. Troy, N.Y.: Rensselaer Polytechnic Institute.

Lumileds. 2004. *Luxeon III Emitter Technical Datasheet DS45* (Rev. 05/28/04). San Jose, Calif.: Lumileds Lighting.

Lumileds. 2004b. *Luxeon V Emitter Technical Datasheet DS34* (Rev. 02/04). San Jose, Calif.: Lumileds Lighting.

Narendran, N., N. Maliyagoda, A. Bierman, R.M. Pysar, and M. Overington. 2000. Characterizing white LEDs for general illumination applications. *Proc SPIE Int Soc Opt Eng 3938*: 240-248.

Narendran, N., J.D. Bullough, N. Maliyagoda, and A. Bierman. 2001a. What is useful life for white light LEDs? *J Illum Eng Soc* 30(1): 57-67.

Narendran, N., N, Maliyagoda, L. Deng and R. Pysar. 2001b. Characterizing LEDs for general illumination applications: Mixed-color and phosphor-based white sources. *Proc SPIE Int Soc Opt Eng 4445*: 137-147.

Narendran, N., and Deng, L. 2002. Performance characteristics of light-emitting diodes. *Illuminating Engineering Society of North America 2002 Annual Conference: Proceedings*. IESNA: New York, pp. 157-164.

Narendran, N. and R. Raghavan. 2003a. *LED Evaluation Final Report* (Deliverable 2.3.1b submitted to California Energy Commission, March 26, 2003).

Narendran, N. and R. Raghavan. 2003b. *Draft Lighting Applications Evaluation Report.* (Deliverable 2.3.3b submitted to California Energy Commission, May 23, 2003).

Norris, R. 2004. Otis Elevators. Personal communication, January 16, 2003.

United Technologies Corporation. n.d. *OTIS Elevator Company*. Internet: http://www.otis.com.

Petitioner Hisense USA Corporation
Exhibit 1028 - Page 69 of 70

Pei, P. 2003. United Technologies Research Center. Personal communication, June 4, 2003.

Rea, M. S. (ed.). 2000. *IESNA Lighting Handbook: Reference and Application, 9th ed*. New York: Illuminating Engineering Society of North America.

Schie, D. 2004. Real-world systems demand application specific-designs. *Laser Focus World* 40(5): 102-108.

Schindler Elevator and Escalator Company. n.d. Internet: http://www.schindler.com. Accessed December 22, 2004.

The-infoshop.com. 3 Sept. 2003. Global Information Inc. Internet: http://www.the-infoshop.com/press/fd15678_en.shtml. Accessed December 22, 2004.

US Census Bureau. n.d. Internet: http://www.census.gov/. Accessed December 20, 2004.

Whitaker, J. 2004. Lighting community sets out challenges for LED makers. *Compound Semiconductor* 10(2): 20-22.

Petitioner Hisense USA Corporation
Exhibit 1028 - Page 70 of 70