US005881226A

United States Patent [19]

Veneklase

[11] **Patent Number: 5,881,226**

[45] **Date of Patent: Mar. 9, 1999**

[54] **COMPUTER SECURITY SYSTEM**

[76] Inventor: **Brian J. Veneklase**, 5011 Ashton Audrey, San Antonio, Tex. 78249

[21] Appl. No.: **738,897**

[22] Filed: **Oct. 28, 1996**

[51] **Int. Cl.**[6] **G06F 15/00**

[52] **U.S. Cl.** **395/188.01**

[58] **Field of Search** 395/188.01, 186; 380/3, 4, 23, 25, 42; 711/164; 370/505, 506

[56] **References Cited**

U.S. PATENT DOCUMENTS

4,484,306	11/1984	Kulczyckyj et al.	364/900
4,779,224	10/1988	Moseley et al.	364/900
5,226,080	7/1993	Cole et al.	380/25
5,261,070	11/1993	Ohta	395/425
5,375,243	12/1994	Parzych et al.	395/725
5,475,762	12/1995	Morisawa .	
5,495,235	2/1996	Durinovic-Johri et al.	340/825.31
5,566,169	10/1996	Rangan et al.	370/56
5,623,637	4/1997	Jones et al.	395/491
5,657,452	8/1997	Kralowetz et al.	395/200.57
5,668,811	9/1997	Worsley et al.	370/424
5,682,475	10/1997	Johnson et al.	395/188.01
5,719,941	2/1998	Swift et al.	380/25

FOREIGN PATENT DOCUMENTS

0 558 326 A1	9/1992	European Pat. Off. .
0844551 A1	5/1998	European Pat. Off. .
2 229 020	9/1990	United Kingdom .
WO 95/19593	7/1995	WIPO .

OTHER PUBLICATIONS

European Search Report, European Patent Office Feb. 19, 1998, 4 pages.

Advanced Computer Architecture, Parallelism, Scalability, Programmability, Kai Hwang, 1993. 771 pages.

European Search Report, European Patent Office May 15, 1998, 4 pages.

Primary Examiner—Robert W. Beausoliel, Jr.
Assistant Examiner—Stephen C. Elmore
Attorney, Agent, or Firm—Chupa & Alberti, P.C.

[57] **ABSTRACT**

Several embodiments of computer security systems are described and which are adapted to grant an authorized individual access to a secured domain, such as a computer or data stream. In one embodiment, the security system comprises: an analyzing means for receiving first and second passwords, each of said passwords being transmitted over a first communication channel, analyzing said first password, transmitting a first signal output only if said first password is authorized, and granting access to said secured domain only if said second password is substantially identical to a code; and a random code generating means for generating said code, transmitting said code over a second communication channel upon receipt of first signal output, and transmitting said code to said analyzing means; and a notification means for receiving said code and for notifying said authorized individual of the identity of said code.

3 Claims, 4 Drawing Sheets

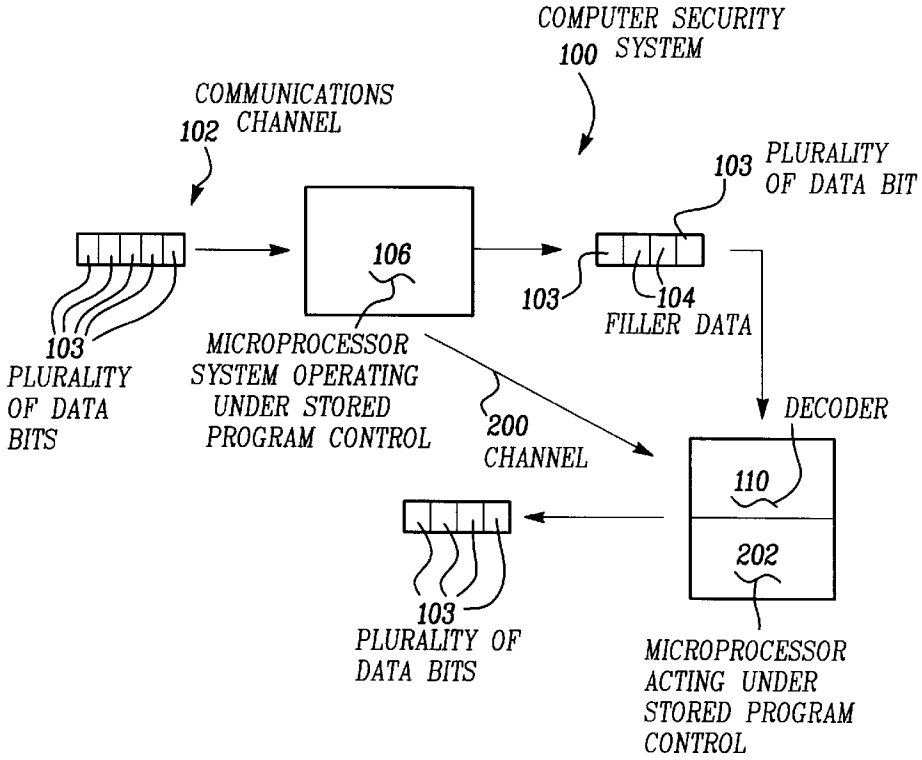

EXPERIAN EXHIBIT 1007
IPR2023-01406

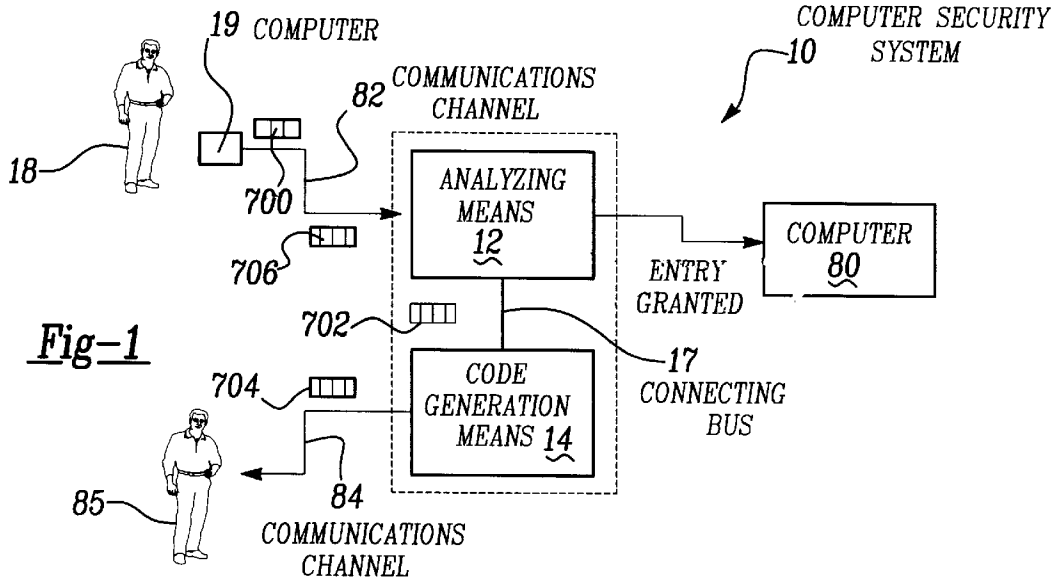

Fig-1

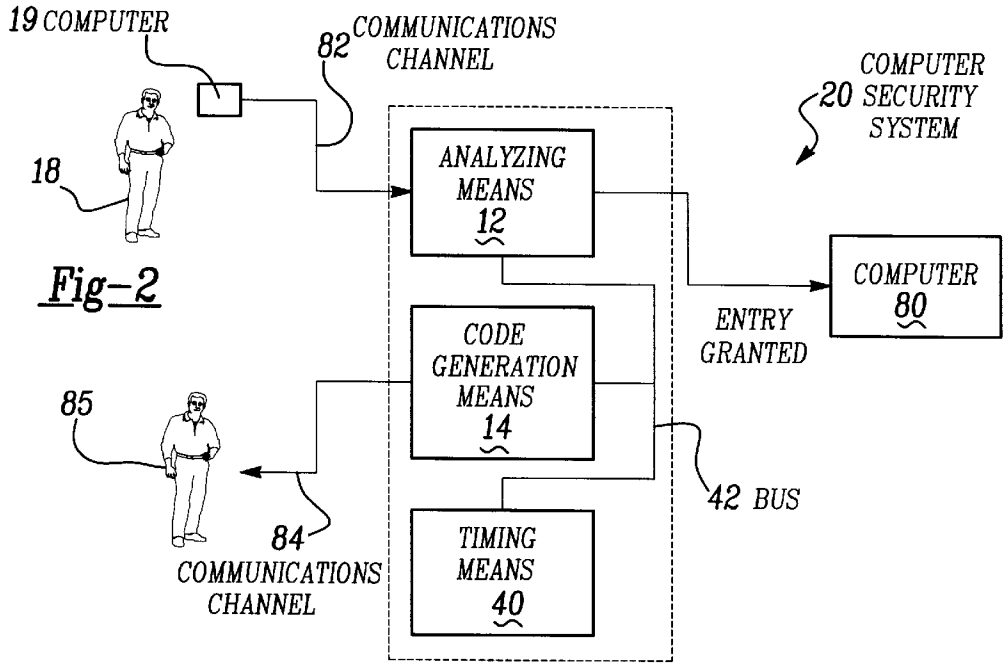

Fig-2

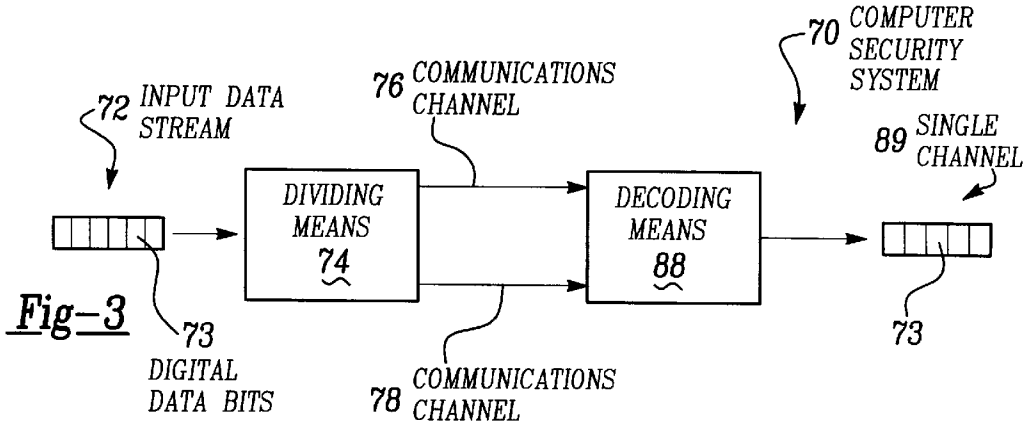

Fig-3

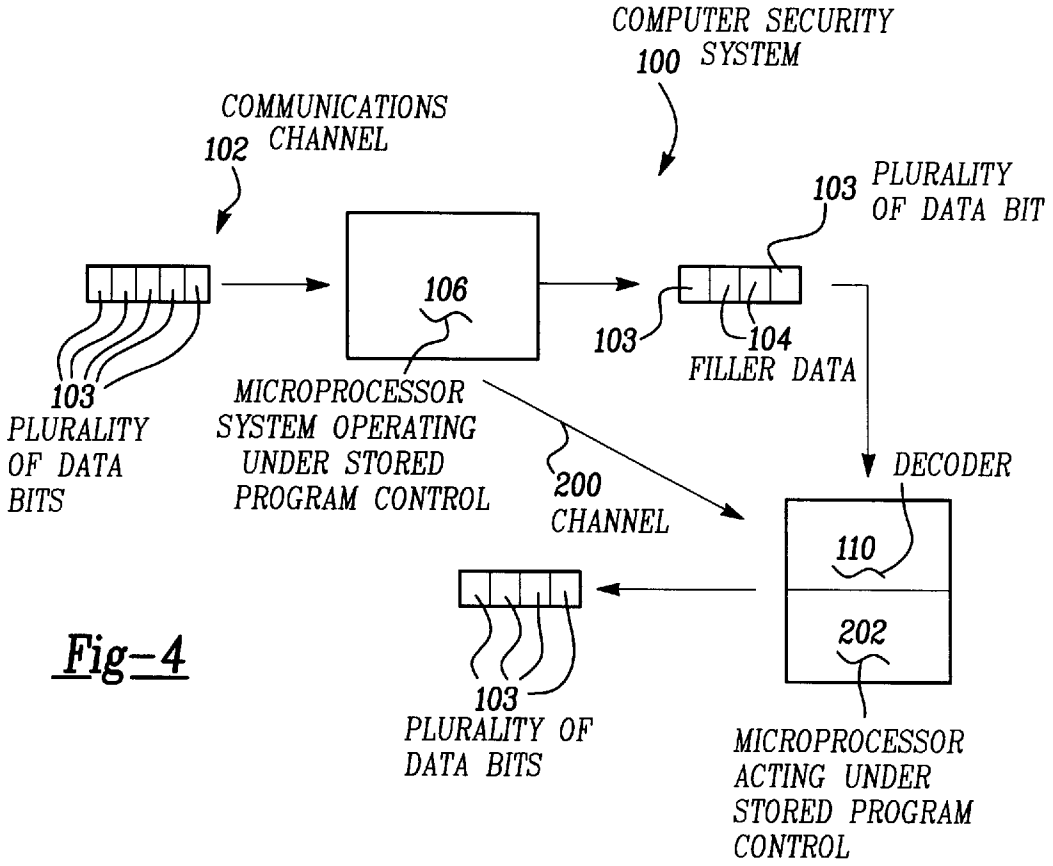
COMPUTER SECURITY SYSTEM
100
COMMUNICATIONS CHANNEL
102
103 PLURALITY OF DATA BIT
106
103
104
FILLER DATA
103
PLURALITY OF DATA BITS
MICROPROCESSOR SYSTEM OPERATING UNDER STORED PROGRAM CONTROL
200
CHANNEL
DECODER
110
202
103
PLURALITY OF DATA BITS
MICROPROCESSOR ACTING UNDER STORED PROGRAM CONTROL

Fig-4

Fig-5

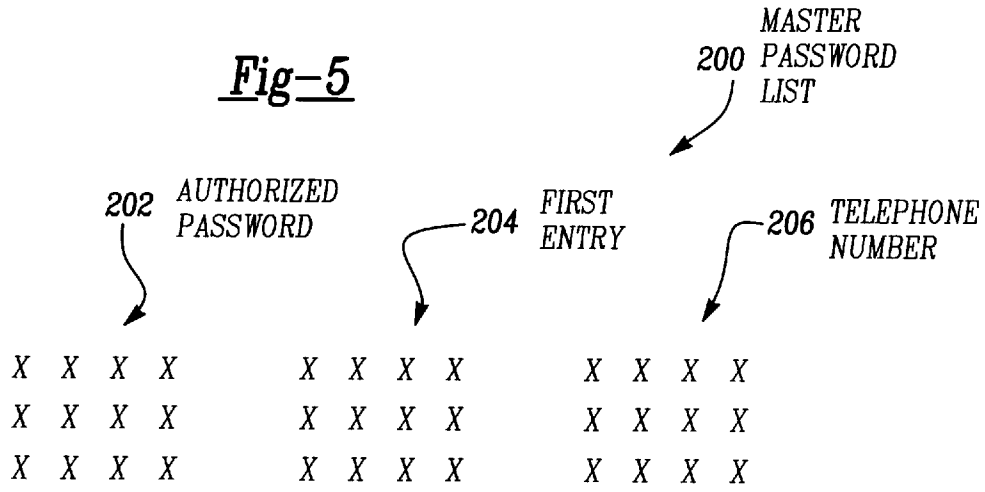
200 MASTER PASSWORD LIST
202 AUTHORIZED PASSWORD
204 FIRST ENTRY
206 TELEPHONE NUMBER
X X X X X X X X X X X X
X X X X X X X X X X X X
X X X X X X X X X X X X

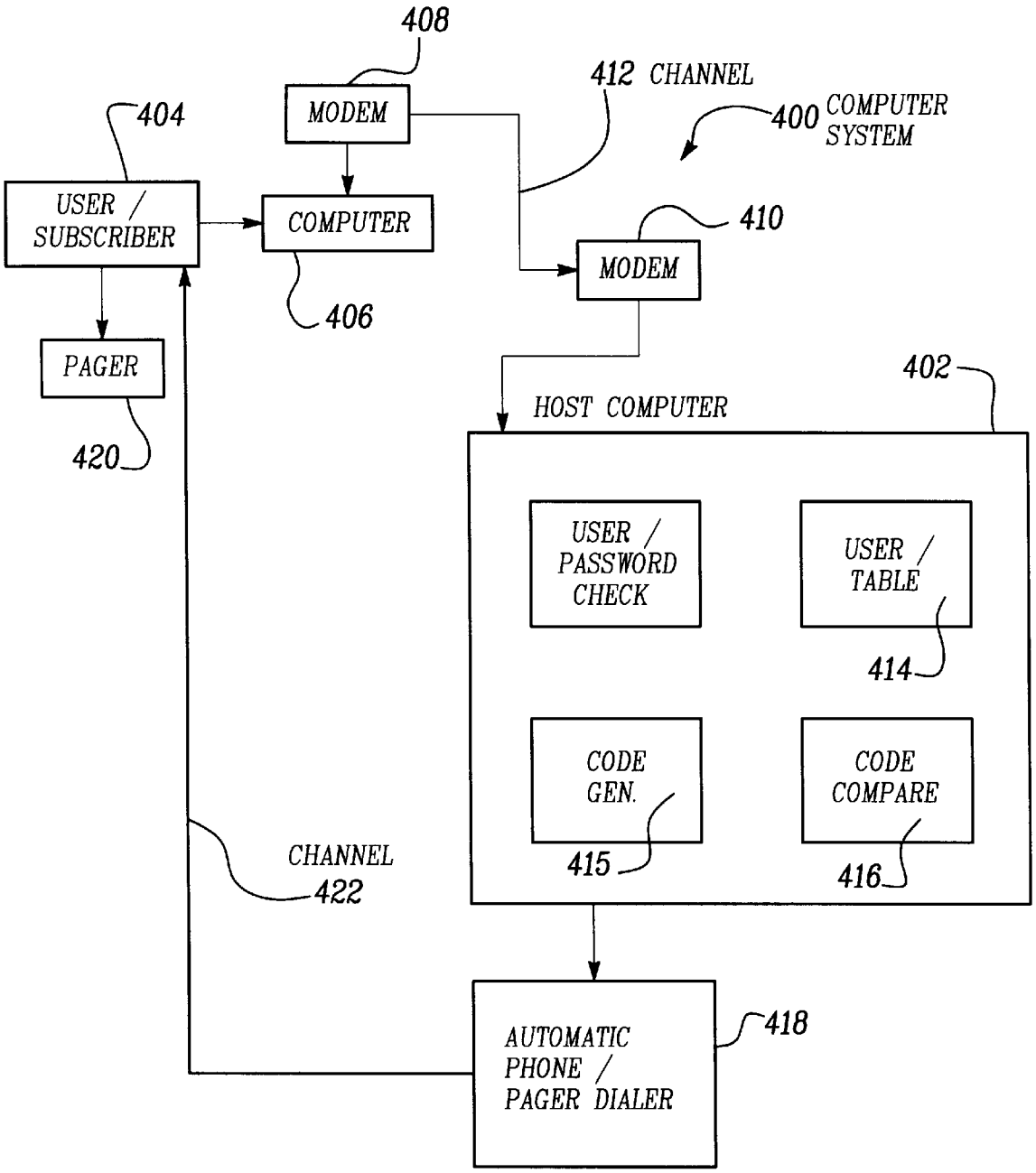
408
MODEM
412 CHANNEL
400 COMPUTER SYSTEM
404
USER / SUBSCRIBER
COMPUTER
410
MODEM
406
PAGER
402
HOST COMPUTER
420
USER / PASSWORD CHECK
USER / TABLE
414
CODE GEN.
CODE COMPARE
CHANNEL
422
415
416
AUTOMATIC PHONE / PAGER DIALER
418

Fig–6

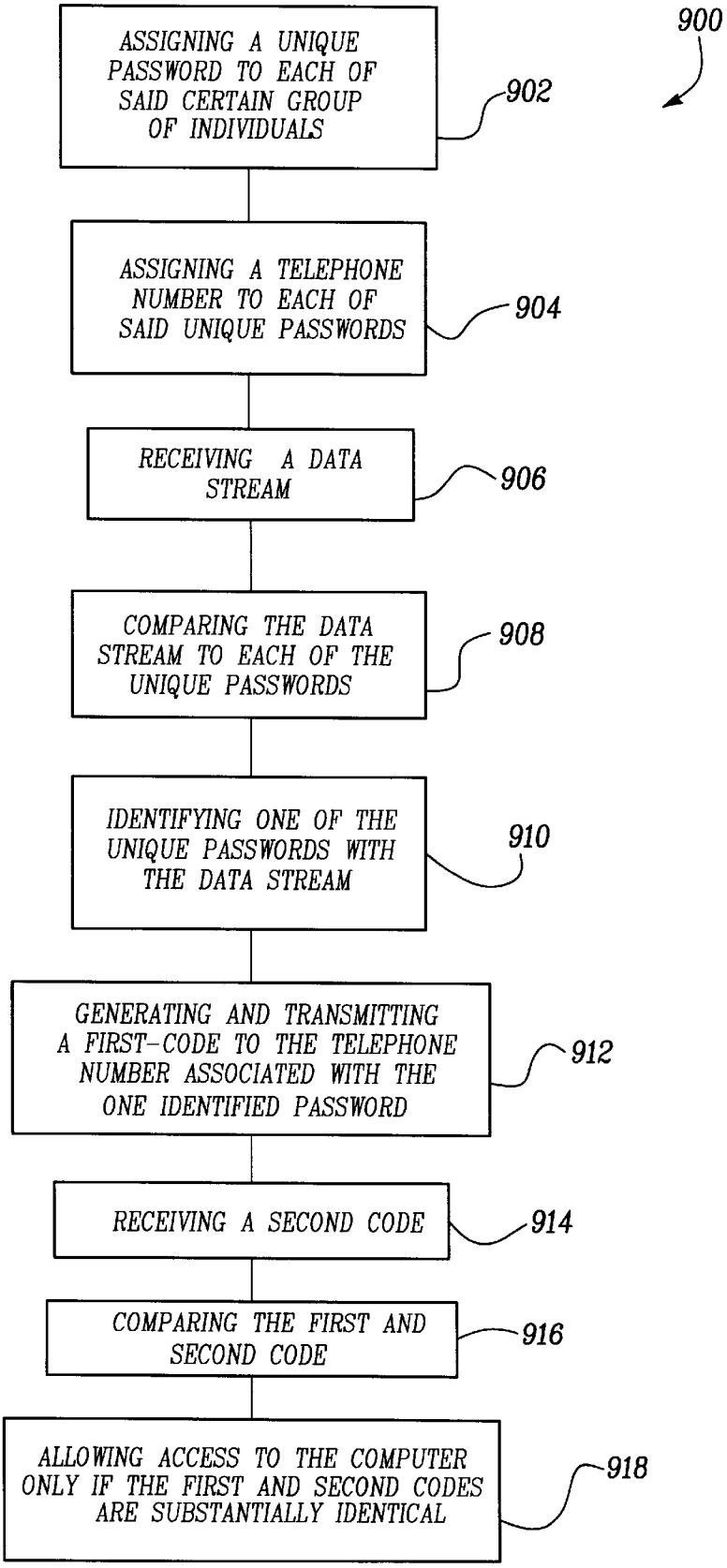
900
ASSIGNING A UNIQUE PASSWORD TO EACH OF SAID CERTAIN GROUP OF INDIVIDUALS
902
ASSIGNING A TELEPHONE NUMBER TO EACH OF SAID UNIQUE PASSWORDS
904
RECEIVING A DATA STREAM
906
COMPARING THE DATA STREAM TO EACH OF THE UNIQUE PASSWORDS
908
IDENTIFYING ONE OF THE UNIQUE PASSWORDS WITH THE DATA STREAM
910
GENERATING AND TRANSMITTING A FIRST-CODE TO THE TELEPHONE NUMBER ASSOCIATED WITH THE ONE IDENTIFIED PASSWORD
912
RECEIVING A SECOND CODE
914
COMPARING THE FIRST AND SECOND CODE
916
ALLOWING ACCESS TO THE COMPUTER ONLY IF THE FIRST AND SECOND CODES ARE SUBSTANTIALLY IDENTICAL
918

Fig-7

COMPUTER SECURITY SYSTEM

FIELD OF THE INVENTION

The present invention relates to a security and/or access restriction system and, in one embodiment, to a security and/or access restriction system which is adapted to grant only authorized users access to a computer system and/or to certain data which may be resident within the computer system and/or resident within a communications channel and/or other communications medium.

BACKGROUND OF THE INVENTION

In recent years, computers have proliferated in all parts of worldwide society, including but not limited to, banking, financial services, business, education, and various governmental entities. For instance and without limitation, these computer systems allow individuals to consummate financial transactions, to exchange confidential scientific and/or medical data, and to exchange highly proprietary business planning data. Hence, these computer systems require and/or allow very sensitive and confidential data to be stored and transmitted over great geographic distances.

Moreover, the rise of multinational communications networks, such as the publicly available Internet communications system, has truly made the world a smaller place by allowing these computers, separated by great geographic distances, to very easily communicate and exchange data. In essence, these worldwide communications channels/networks, sometimes collectively referred to as "the Information Superhighway" have electronically connected the peoples of the world—both the good and the very bad.

That is, while these computer systems have increased efficiency and greatly changed the manner in which we work and interact, they have been especially prone to unauthorized "break-ins", viral destruction, and/or unauthorized data modifications. Accordingly, the rather sensitive and confidential data which is stored and used within these computer systems and transmitted between these computer systems has been the target of attack by people known as "hackers" and by high level and very sophisticated espionage and industrial spies. Computer access security and data transmission security has recently come to the forefront of importance and represents one of the great needs of our times.

Many attempts have been made to create and utilize various techniques (hereinafter the term "technique" as used and/or employed in this Application refers to any combination of software, hardware, and/or firmware which comprise an apparatus and a methodology whose components cooperatively achieve an overall security objective) to "ensure" that only authorized users are allowed to gain access to these respective computer systems. These prior techniques, while somewhat effective, suffer from various drawbacks.

For example, one such prior computer system security technique comprises the use of predetermined "passwords". That is, according to this security technique, each computer system has a list of authorized passwords which must be communicated to it before access is given or allowed. In theory, one or more "trusted" system administrators distribute these "secret" passwords to a group of authorized users of a computer system. The "secret" nature of the passwords, in theory, prevents unauthorized users from accessing the computer system (since presumably these unauthorized users do not have the correct passwords). This technique is not very effective since oftentimes those authorized individuals mistakenly and unwittingly expose their password to

an unauthorized user. Moreover, this technique of data security may be easily "broken" by a "hacker's" deliberate and concentrated attempt at automatically inputting, to the targeted computer, hundreds and perhaps thousands of passwords until an authorized password is created.

In addition to the prior password technique other, more sophisticated access techniques are known and used. For example, there are known techniques which require the possession of a physical object or feature, such as "access cards" which are "read" by a card reading device and biometric authentication techniques (e.g. requiring the initial input of such authorized user physical characteristics as fingerprints and eye patterns and the later comparison of these input patterns to those of a "would-be" user). Both of these prior techniques are relatively complicated, are relatively costly, and are prone to error, such as and without limitation, mistaken unauthorized entry due to their complexity. These techniques are also prone to unauthorized entry by use of counterfeit and/or stolen cards, objects, and fingerprint readers. Other prior data security techniques, such as encryption, attempt to prevent unauthorized use of transmitted data or unauthorized access to a computer system by modifying and/or changing the transmitted data in a certain manner, and/or requiring the transmission and receipt of modified data before access is granted. While somewhat effective, these prior encryption techniques are relatively costly and complicated and require one or more known "encryption keys" which are in constant exchange between users and which are themselves susceptible to theft and/or inadvertent disclosure. Furthermore, the best-known and perhaps strongest encryption algorithm is proprietary and cannot be used without a costly license. Moreover, since the encrypted message still provides all of the transmitted data, in some form, it is still possible for one to gain access to the entire data stream by "breaking the encryption code". Since no encryption algorithm is ever considered "unbreakable", encryption is not considered to be a "foolproof" security solution.

There is therefore a need to provide a technique to substantially prevent the unauthorized access to one or more computer systems and which overcomes the various drawbacks of these afore-described prior techniques. There is also a need to provide a technique to substantially prevent the unauthorized interception and use of transmitted data and which overcomes the various drawbacks of the prior art. Applicant's invention(s) seek and do meet these needs. Applicant's invention, in one embodiment, achieves these objectives by splitting the data into a plurality of separate communication channels, each of which must be "broken" for the entire data stream to be obtained. In essence, in this embodiment of Applicant's invention, cooperatively form the entire message. The splitting of the data in this manner may also "fool" the would be data thief into believing that he or she has obtained all of the data when, in fact, only several communication channels are obtained.

SUMMARY OF THE INVENTION

While a number of "objects of the invention" are set forth below, it should be realized by one of ordinary skill in the art that the invention(s) are not to be limited, in any manner, by these recited objects. Rather, the recited "objects of the invention" are to be used to place Applicant's various inventions in proper overall perspective and to enable the reader to better understand the manner in which Applicant's inventions are to be made and used, especially in the preferred embodiment of Applicant's invention. Accordingly, the various "objects of the invention" are set forth below:

It is a first object of the present invention to provide a technique to substantially ensure that only authorized users gain access to a computer system.

It is a second object of the invention to provide a technique to substantially ensure that only authorized users gain access to a computer system and which overcomes the various previously delineated drawbacks of the prior computer system security techniques.

It is a third object of the invention to provide a technique to substantially ensure that only authorized users have access and use of certain transmitted data appearing, for example, within a data stream.

It is a fourth object of the invention to provide a technique to substantially ensure that only authorized users have access and use of certain transmitted data and/or certain hardware, software, and/or firmware which cooperatively form and/or comprise a computer system, and that this technique overcomes the various previously delineated drawbacks of the prior techniques.

According to a first aspect of the present invention, a security system is provided. Particularly, the security system is adapted to be used in combination with a computer and to only grant an authorized individual access to the computer. The security system comprises, in one embodiment, password means for receiving a password by use of a first communications channel; and code generation means, coupled to said password means, for generating a code by use of a second communications channel, and to allow that individual access to the computer system only if that individual generates and communicates the code to the code generation means.

According to a third aspect of the present invention, a method is provided for use with a computer and effective to substantially prevent an unauthorized user from accessing the computer. The method comprises, in one embodiment, the steps of assigning a password to the user; receiving the password by use of a first communications channel; generating a code in response to the received password; transmitting the code by use of a second communications channel to the user; transmitting the code to the computer; and allowing access to the computer only after the code is transmitted to the computer.

According to a fourth aspect of the present invention, a security system is provided to grant an authorized individual access to a secured stream of data bits. In one embodiment, the data security system comprises a data stream dividing means for receiving said stream of data bits and dividing said stream of data bits into a plurality of sub-streams; transmitting means for transmitting said sub-streams in a predetermined order over a communication channel; and a decoding means for receiving said sub-streams and for recombining said received sub-streams to create said secured stream of data bits.

Further objects, features, and advantages of the present invention will become apparent from a consideration of the following description, the appended claims, and/or the appended drawings. It should further be realized by one of ordinary skill in the art that the previously delineated objects and aspects of the invention are for illustration purposes only and are not to be construed so as to limit the generality of the inventions and/or to limit the interpretation to be given to the various appended claims. Moreover, it should also be realized by those of ordinary skill in the art that the term "communications channel" as used throughout this Application refers to any physical and/or electromagnetic means or method of transferring and/or communicating information from one or more sources to one or more receivers. Moreover, the term "communications channel" should be given the broadest known interpretation covering any method and/or medium which facilitates the transfer of information and/or over which such information is transferred.

BRIEF DESCRIPTION OF THE DRAWINGS

For a fuller and more complete understanding of the nature and objects of the present invention, reference should be had to the following drawings wherein:

FIG. **1** is a block diagram of a computer security system made in accordance with the teachings of the preferred embodiment having the preferred security techniques of the invention;

FIG. **2** is a block diagram of another embodiment of a computer security system made in accordance with the teachings of the preferred embodiment having the preferred techniques of the invention;

FIG. **3** is a block diagram of yet another embodiment of a security system made in accordance with the teachings of the preferred embodiment having the preferred techniques of the invention;

FIG. **4** is a block diagram of another embodiment of a computer security system made in accordance with the teachings of the preferred embodiment having the preferred techniques of the invention;

FIG. **5** is a schematic diagram of a password table used by the computer security systems shown in FIGS. **1** and **2**;

FIG. **6** is a block diagram of one embodiment of the preferred embodiment of the invention; and

FIG. **7** is a flow chart illustrating the operation of computer system **400** shown in FIG. **6**.

DETAILED DESCRIPTION OF THE INVENTION

Referring now to FIG. **1**, there is shown a block diagram of a computer security system **10**, made in accordance with the principles of the preferred embodiment of the invention and adapted for use in combination with computer **80**. More particularly, computer security system **10** selectively allows communication and/or data processing access to computer **80** in a manner which is technically described throughout the remainder of this Application. As shown, security system **10** includes an "analyzing means" **12** and a "random code generating means" **14**.

In one embodiment of the preferred embodiment of the invention, analyzing means **12** comprises one or more software subroutines which are adapted to execute upon and/or within computer **80**. Alternatively, analyzing means **12** may comprise a microprocessor and/or similar type of computer which is adapted to operate under stored program control in the manner set forth in this Application. One example of another type of computer operating under stored program control and which may be used by the preferred embodiment of the invention is shown and described within chapter eight of the text entitled *Advanced Computer Architecture: Parallelism, Scalability, Programmability,* which was authored by Kai Hwang, which is published by McGraw-Hill, Inc., which has a library reference number of ISBN 0-07-031622-8, and the entire text of all of the chapters of which are fully and completely incorporated herein by reference, word for word and paragraph for paragraph. In either embodiment, analyzing means **12** receives and compares at least two "sets" or streams of data.

Should the individually received "sets" match, analyzing means **12** generates and communicates an "access granted" command to computer **80**, allowing individual **18** access to the computer **80**. Moreover, random code generating means **14** may similarly comprise a conventional pseudo-random number generator which may be constructed or developed on one or more software subroutines which reside and operate/execute upon and/or within computer **80** or may comprise a microprocessor and/or similar type of computer which operates under stored program control.

In operation, individual **18**, desiring access to and within computer **80** utilizes a first communication channel **82** (e.g. a first telephone line, radio channel, and/or satellite channel) and communicates, by use of his or her voice or by use of a computer **19** a first password to analyzing means **12**. Analyzing means **12** then checks and/or compares this first received password with a master password list which contains all of the authorized passwords associated with authorized entry and/or access to computer **80**.

As shown in FIG. **5**, in the preferred embodiment of the invention, analyzing means **12** contains a master password list **200** having a first column of entries corresponding to authorized passwords necessary to gain access to computer **80**. Moreover, as further shown in FIG. **5**, each authorized password **202**, contained in this master password list **200**, has a unique first entry **204** associated with it and which identifies the name of the authorized user who has been assigned that corresponding password and at least one telephone number **206** and/or network address associated with the identified user. This is shown in step **902** of flow chart **900**.

If the received password matches an entry of the master password list, analyzing means **12** generates a command, by means of connecting bus **17** or software message or function call to random code generating means **14** and causes the random code generation means **14** to generate a substantially random and/or pseudo-random number or code, of programmable length, and to transmit the number and/or code, by means of a second communications channel **84**, to the individual **85** associated with the received password **202** in the master password list. That is, as should be apparent to one of ordinary skill in the art, code generation means **14** includes both a random number generator and a conventional and commercially available communications interface (e.g. modem and/or telephone/pager interface), allowing the generated pseudo-random code to be generated or communicated over a wide variety of mediums.

Further, it should be apparent that individual **85** may or may not be the same person as individual **18**. If individual **18** was the individual identified in the master password list (e.g. "was authorized"), that individual **18** receives the pseudo-random number and transmits the number to the analyzing means **12**, by means of communications channel **82**. Once the pseudo-random number is received by the analyzing means **12**, from channel **82**, it is compared with the number generated by generation means **14**. If the two codes are substantially the same, entry to computer **80** and/or to a certain part of computer **80** such as, without limitation, the hardware, software, and/or firmware portions of computer **80** is granted to individual **18**. For instance, in another embodiment, table **200** of FIG. **5** could contain yet another set of entries specifying the directories or portions of computer **80** that the individual **18** was allowed to have access to. In this manner, allowed access to computer **80** would be further restricted to those computer portions which are specified within table **200**. It should be apparent to one of ordinary skill in the art that these portions may be different for different users and that each authorized user may have a different portion that may be accessed in an authorized manner.

It should be apparent to one of ordinary skill in the art that Applicant's foregoing computer security technique is a relatively low-cost, but effective technique, for properly ensuring that only authorized users gain access to a computer system, such as computer system **80**. That is, Applicant's foregoing computer security embodiment, utilizes two distinct communications channels and a random number generator in order to ensure that an authorized user of a computer system is notified that someone or something is seeking access to the computer system with his or her password. Moreover, Applicant's foregoing invention is very cost effective as it employs substantially "off the shelf" and readily available components. Further, the use of a "secret" password, a "secret" substantially random number, and a "secret" second channel allows for multiple levels of security before access to the computer system is achieved and provides enhanced security over the prior art.

Referring now to FIG. **6** there is shown a computer system **400** made in accordance with the teachings of the preferred embodiment of the invention and representing one example and/or implementation which is made in accordance with the various teachings of the preferred embodiment of the invention. As shown, computer system **400** includes a host computer **402** (corresponding to computer **80** of the system shown in FIG. **1**) to which a user or other individual **404** (corresponding to individual **18** of FIG. **1**) desires access to. As further shown in FIG. **6**. As shown, individual **404**, in this implementation example, utilizes a commercially available and conventional computer **406** and a commercially available and conventional modem **408** to communicate with a commercially available and conventional modem **410** by means of a typical communications channel (e.g. a conventional "dial-up" telephone line) **412**. Hence, the user **404**, in this embodiment, only requires conventional computer equipment. Host computer **402**, in this embodiment, requires a conventional and commercially available automatic dialer which is altered, in a known manner, to receive and pass one or more passwords and/or codes as data.

In operation, user **404** dials through and/or by means of his or her computer **406** and modem **408** in the usual and conventional manner to connect and access host computer **402**. The host computer **402**, using the principles of the preferred embodiment of this invention, answers the requester's call, which occurs over channel **412**, and requests and receives the user's identification code. Host computer **402** checks the received identification code and cross references the received password code against a pager phone number list resident within the user table **414** which is stored within computer **402**. This is shown in steps **904**, **906**, and **908**, of flow chart **900**. This comparison, if a match is made, causes the "code generator" software subroutine **415**, resident within computer **402**, to generate a pseudo-random number code and passes the received code along with the authorized user's pager number to the commercially available and conventional automatic dialer **418**. The automatic dialer **418** telephones the conventional and commercially available pager **420** by means of conventional and commercially available communication channel **422** (e.g. voice line) and transmits the code to the user's pager. This is shown in steps **910** and **912** of flow chart **900**. As this happens, the host computer **402** awaits the reply from the user attempting to gain access to the computer.

The user **404** now enters the code he or she has received from the pager **420** and any timing instructions which, in yet

another embodiment of the invention may also be transmitted from computer **402**, and sends this password or pseudo-random code back to computer **402** where it is compared within the software subroutine module denoted as "code compare" **416** in FIG. **6**. This is shown in steps **914**, **916**, and **918** of flow chart **900**. If the comparison yields a match, the user **404** is allowed access to computer **402** and/or to a portion of computer **402**.

Referring now to FIG. **2**, there is shown a second embodiment of a computer security system made in accordance with the teachings of the preferred embodiment of the invention. This second embodiment **20** is substantially similar to system **10** but also includes a timer or "timing means" **40** which may comprise one or more software subroutines which are adapted to operate and/or execute within and/or upon computer **80** or may comprise a microprocessor which operates under stored program control. In one embodiment, timing means **40** comprises a conventional "watchdog timer" as will be apparent to those of ordinary skill in the art.

In operation, timing means **40** records the time at which the first and second passwords are received by analyzing means **12**. Timing means **40**, in one embodiment which is coupled to analyzing means **12** and code generation means **14** by bus **42** and in another embodiment which is in software communication with means **12** and **14**, then compares the times to determine whether the second password was received within a predetermined period or predetermined "window" of time after the first password was received. In the preferred embodiment of the invention, the predetermined period of time is programmable. The predetermined period of time, will typically need to vary according to the nature or the communications medium used by means **14** to notify individual **85** of the value of the generated code. For example, the predetermined period of time would be shorter when communications channel **84** comprises a pager or cellular phone, since the owner has immediate access to the code upon transmission; and longer when communications channel **84** comprises a voice-mail system which the owner has to affirmatively access to receive the code. If the second password was not received within the predetermined period of time, analyzing means **12** denies entry to the secured domain (e.g. computer **80**). If the second password was received within the predetermined period of time, analyzing means **12** compares it to the code which was previously generated. If the second password is not substantially identical to the previously generated code, analyzing means **12** denies individual **18** entry to the secured domain (e.g. computer **80**). If the received password is substantially identical to the code, analyzing means **12** grants individual **18** entry into the secured domain. As will be readily apparent to those of ordinary skill in the art, timing means **40** provides yet a third level of security to computer system **80**. Moreover, it should also be apparent to one of ordinary skill in the art that this "predetermined time" may be as short or as small as several milli-seconds or micro-seconds. This is particularly true if, in yet another embodiment of Applicant's invention, the password generated by communication means **14** is received by a computerized device which is adapted to received the password and to generate a new password code in a substantially automatic manner.

Referring now to FIG. **3**, there is shown a block diagram of a third embodiment of a computer security system made in accordance with the principles of the preferred embodiment of the invention. As shown, computer security system **70** is adapted to receive an input data stream **72**, comprising in a first embodiment, a plurality of digital data bits **73**, which are to be securely transmitted to a distant site. System **70**, as further shown, includes a data stream dividing means **74** which in one embodiment comprises a commercially available one input and two channel output time division or statistical multiplexor which samples the bits of received data and places, in a certain predetermined manner (e.g. alternately) some of the received data bits onto the first communications channel **76** and some of the received data bits onto the second communications channel **78**. In this manner, one attempting to wrongfully intercept and/or access the data stream **72** would need access to both communications channels **76**, **78** and would need to know the dividing algorithm that dividing means **74** utilizes to divide the received data for placement onto channels **76**, **78**. Applicant's third embodiment therefore provides a very high level of data transmission security.

As further shown in FIG. **3**, in this third embodiment of the invention, security system **70** further includes a decoding means **88** which may comprise a commercially available microprocessor operating under stored algorithmic program control and which contains "mirror image" of the algorithm used to divide the data stream transmitted to it by means **74**. In this manner, the data from each of the channels **76**, **78** is reconstituted onto single channel **89**, in substantially the exact same manner that it was received by means **74**. In essence, this third embodiment of Applicant's invention allows and/or provides for the "splitting" of a data stream into a plurality of channels in a predetermined manner and the concomitant reconstitution of the data stream once the data has traversed the communications medium. Hence, the embodiment in FIG. **3** splits the data stream so that anyone getting access to one of the channels **76**, **78** can't reconstruct the data stream because they're missing half or more of the information. If more channels are used, each channel carries far less than one-half the information.

Referring now to FIG. **4** there is shown a fourth embodiment of a computer security and/or data transmission system **100** which is made in accordance with the teachings of the preferred embodiment of the invention. As shown, system **100** is adapted to receive a plurality of data bits **103** contained in a first communications channel **102**. It should be noted that the data contained within this channel **102** is interspersed with a plurality of "non-data" or filler data bits or "material" **104** according to some predetermined and/or randomly varying algorithm (e.g. every third bit space is filler data) by a microprocessor system **106** which is operating under stored program control. The filler data **104** is binary data and cannot be deciphered as "filler" by an unauthorized user. Therefore, even if one were to intercept the transmitted data, one could not decipher or decode the data. System **100** further includes a decoder **110** for the data reception and decodes **202** for the algorithm reception which, in one embodiment, comprises a microprocessor acting under stored program control and which is adapted to "strip off" the "filler" bits and to allow the originally transmitted data to be reconstituted. In this manner, data may be safely transmitted and received in an authorized manner. In yet another embodiment of the invention which is shown in FIG. **4**, the algorithm which controls the filler pattern and/or the way that the filler data is interspersed within the "regular" data pattern may be periodically changed in a known and predetermined manner. In this embodiment, the filler data is interspersed within the "regular" data according to a varying filler algorithm (e.g. every three bits for the first 99 bits and then every four bits thereafter). In this embodiment, decoder **110** is adapted to "strip" off these filler bits by having prior knowledge (e.g. embedded within a

computer program resident within and controlling the decoder) of the varying algorithms which are utilized by system **100**. Here, in the embodiment shown in FIG. **4**, unlike that shown and described with respect to FIG. **3**, all the data is transmitted on a single channel but is "muddied."

In yet another embodiment of the invention, as shown in FIG. **4**, a varying data key is transmitted to decoder **110** and/or decoder **202** by microprocessor system **106** by use of a second channel **200**. In this manner, a second channel is needed to tell or communicate the manner in which the filler data is interspersed within the regular data so that the decoder **110** may "strip off" the filler data. In this manner, the filler patterns may be dynamically changed. Hence, this system utilizes dual/multi channel media to communicate the cryptic modulation of the data with filler.

It is to be understood that the invention is not limited to the exact construction or method illustrated and described above, but that various changes and modifications may be made without departing from the spirit and scope of the invention as defined in the following claims.

We claim:

1. A method to securely transmit data having a plurality of bits, said method comprising the steps of:

interspersing a plurality of filler data bits into said data in a certain random pattern:

transmitting said data and said interspersed filler data;

receiving said data and said interspersed filler data; and

discarding said interspersed filler data.

2. A method to securely transmit data having a plurality of bits, said method comprising the steps of:

interspersing a plurality of filler data bits into said data in a certain varying pattern:

transmitting said data and said interspersed filler data;

receiving said data and said interspersed filler data; and

discarding said interspersed filler data.

3. A method to securely transmit data having a plurality of bits, said method comprising the steps of:

interspersing a plurality of filler data bits into said data in a certain pattern:

periodically varying said certain pattern of said filler data bits;

transmitting said data and said interspersed filler data;

receiving said data and said interspersed filler data; and

discarding said interspersed filler data.

* * * * *