US011202591B2

(12) **United States Patent**
Yee et al.

(10) **Patent No.: US 11,202,591 B2**
(45) **Date of Patent: *Dec. 21, 2021**

(54) **ANALYTE SENSOR AND APPARATUS FOR INSERTION OF THE SENSOR**

(71) Applicant: **ABBOTT DIABETES CARE INC.**, Alameda, CA (US)

(72) Inventors: **Phillip Yee**, San Francisco, CA (US); **Christopher A. Thomas**, San Leandro, CA (US); **Udo Hoss**, Castro Valley, CA (US); **Lei He**, Moraga, CA (US); **Michael R. Love**, Pleasanton, CA (US)

(73) Assignee: **ABBOTT DIABETES CARE INC.**, Alameda, CA (US)

(*) Notice: Subject to any disclaimer, the term of this patent is extended or adjusted under 35 U.S.C. 154(b) by 0 days.

This patent is subject to a terminal disclaimer.

(21) Appl. No.: **17/221,154**

(22) Filed: **Apr. 2, 2021**

(65) **Prior Publication Data**

US 2021/0219886 A1 Jul. 22, 2021

Related U.S. Application Data

(63) Continuation of application No. 17/009,647, filed on Sep. 1, 2020, now Pat. No. 11,006,870, which is a (Continued)

(51) **Int. Cl.**
A61B 5/00 (2006.01)
A61B 5/1486 (2006.01)
(Continued)

(52) **U.S. Cl.**
CPC ***A61B 5/14865*** (2013.01); ***A61B 5/002*** (2013.01); ***A61B 5/0004*** (2013.01); ***A61B 5/0022*** (2013.01); ***A61B 5/0024*** (2013.01); ***A61B 5/02055*** (2013.01); ***A61B 5/14503*** (2013.01); ***A61B 5/14532*** (2013.01);
(Continued)

(58) **Field of Classification Search**
CPC ... A61B 5/14865; A61B 5/0004; A61B 5/002; A61B 5/0022; A61B 5/14503; A61B 5/14532; A61B 5/6849; A61B 5/6898; A61B 5/7425; A61B 2560/0412;
(Continued)

(56) **References Cited**

U.S. PATENT DOCUMENTS

3,123,790 A 3/1964 Tyler
3,260,656 A 7/1966 Ross, Jr.
(Continued)

FOREIGN PATENT DOCUMENTS

AU 2003259741 2/2004
CA 2291105 12/1998
(Continued)

OTHER PUBLICATIONS

Armour, J. C., et al., "Application of Chronic Intravascular Blood Glucose Sensor in Dogs", Diabetes, vol. 39, 1990, pp. 1519-1526.
(Continued)

Primary Examiner — Christian Jang
(74) *Attorney, Agent, or Firm* — One LLP

(57) **ABSTRACT**

An apparatus for insertion of a medical device in the skin of a subject is provided.

30 Claims, 29 Drawing Sheets

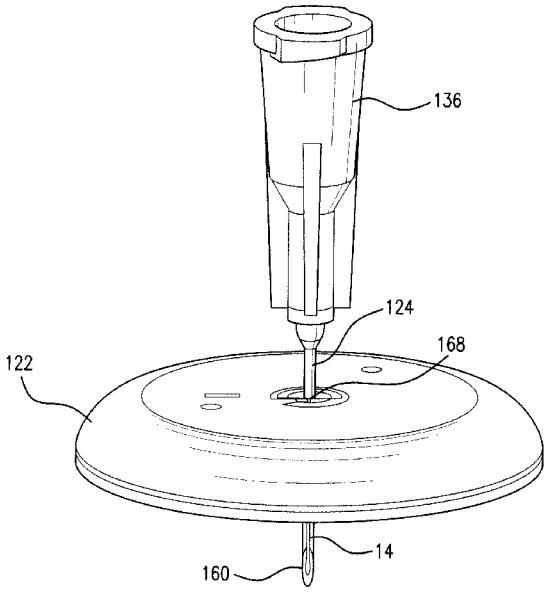

DEXCOM
EXHIBIT 1001

Related U.S. Application Data

continuation of application No. 16/736,728, filed on Jan. 7, 2020, now Pat. No. 10,786,190, which is a continuation of application No. 15/994,129, filed on May 31, 2018, now abandoned, which is a continuation of application No. 15/475,647, filed on Mar. 31, 2017, now Pat. No. 9,993,188, which is a continuation of application No. 15/192,531, filed on Jun. 24, 2016, now Pat. No. 9,636,068, which is a continuation of application No. 12/698,129, filed on Feb. 1, 2010, now Pat. No. 9,402,544.

(60) Provisional application No. 61/149,639, filed on Feb. 3, 2009.

(51) **Int. Cl.**

A61B 5/0205	(2006.01)
G06K 7/10	(2006.01)
A61B 5/145	(2006.01)
A61M 5/158	(2006.01)
C12Q 1/00	(2006.01)
H04L 29/08	(2006.01)
A61M 5/172	(2006.01)
A61M 5/32	(2006.01)

(52) **U.S. Cl.**

CPC ***A61B 5/6849*** (2013.01); ***A61B 5/6898*** (2013.01); ***A61B 5/72*** (2013.01); ***A61B 5/742*** (2013.01); ***A61B 5/7405*** (2013.01); ***A61B 5/7425*** (2013.01); ***A61B 5/7455*** (2013.01); ***A61M 5/158*** (2013.01); ***A61M 5/1723*** (2013.01); ***C12Q 1/001*** (2013.01); ***C12Q 1/006*** (2013.01); ***G06K 7/10366*** (2013.01); ***H04L 67/12*** (2013.01); *A61B 2560/0214* (2013.01); *A61B 2560/0412* (2013.01); *A61B 2560/0475* (2013.01); *A61B 2560/0487* (2013.01); *A61B 2562/0295* (2013.01); *A61M 5/3286* (2013.01); *A61M 2005/1726* (2013.01); *A61M 2205/33* (2013.01); *A61M 2205/3584* (2013.01); *A61M 2205/502* (2013.01); *A61M 2230/201* (2013.01)

(58) **Field of Classification Search**

CPC A61B 2560/0487; C12Q 1/006; G06K 7/10366; H04L 67/12

See application file for complete search history.

(56) **References Cited**

U.S. PATENT DOCUMENTS

3,522,807 A 8/1970 Millenbach
3,581,062 A 5/1971 Aston
3,653,841 A 4/1972 Klein
3,670,727 A 6/1972 Reiterman
3,719,564 A 3/1973 Lilly, Jr. et al.
3,776,832 A 12/1973 Oswin et al.
3,837,339 A 9/1974 Aisenberg et al.
3,926,760 A 12/1975 Allen
3,949,388 A 4/1976 Fuller
3,972,320 A 8/1976 Kalman
3,979,274 A 9/1976 Newman
4,008,717 A 2/1977 Kowarski
4,016,866 A 4/1977 Lawton
4,036,749 A 7/1977 Anderson
4,055,175 A 10/1977 Clemens et al.
4,059,406 A 11/1977 Fleet
4,076,596 A 2/1978 Connery et al.
4,098,574 A 7/1978 Dappen
4,100,048 A 7/1978 Pompei et al.
4,120,292 A 10/1978 LeBlanc, Jr. et al.
4,129,128 A 12/1978 McFarlane
4,151,845 A 5/1979 Clemens
4,168,205 A 9/1979 Danninger et al.
4,172,770 A 10/1979 Semersky et al.
4,178,916 A 12/1979 McNamara
4,206,755 A 6/1980 Klein
4,224,125 A 9/1980 Nakamura et al.
4,240,438 A 12/1980 Updike et al.
4,245,634 A 1/1981 Albisser et al.
4,247,297 A 1/1981 Berti et al.
4,294,258 A 10/1981 Bernard
4,327,725 A 5/1982 Cortese et al.
4,340,458 A 7/1982 Lerner et al.
4,344,438 A 8/1982 Schultz
4,349,728 A 9/1982 Phillips et al.
4,352,960 A 10/1982 Dormer et al.
4,356,074 A 10/1982 Johnson
4,365,637 A 12/1982 Johnson
4,366,033 A 12/1982 Richter et al.
4,373,527 A 2/1983 Fischell
4,375,399 A 3/1983 Havas et al.
4,384,586 A 5/1983 Christiansen
4,390,621 A 6/1983 Bauer
4,392,849 A 7/1983 Petre et al.
4,401,122 A 8/1983 Clark, Jr.
4,404,066 A 9/1983 Johnson
4,418,148 A 11/1983 Oberhardt
4,425,920 A 1/1984 Bourland et al.
4,427,770 A 1/1984 Chen et al.
4,431,004 A 2/1984 Bessman et al.
4,436,094 A 3/1984 Cerami
4,440,175 A 4/1984 Wilkins
4,450,842 A 5/1984 Zick et al.
4,458,686 A 7/1984 Clark, Jr.
4,461,691 A 7/1984 Frank
4,469,110 A 9/1984 Slama
4,477,314 A 10/1984 Richter et al.
4,478,976 A 10/1984 Goertz et al.
4,484,987 A 11/1984 Gough
4,494,950 A 1/1985 Fischell
4,509,531 A 4/1985 Ward
4,522,690 A 6/1985 Venkatasetty
4,524,114 A 6/1985 Samuels et al.
4,526,661 A 7/1985 Steckhan et al.
4,527,240 A 7/1985 Kvitash
4,534,356 A 8/1985 Papadakis
4,538,616 A 9/1985 Rogoff
4,543,955 A 10/1985 Schroeppel
4,545,382 A 10/1985 Higgins et al.
4,552,840 A 11/1985 Riffer
4,560,534 A 12/1985 Kung et al.
4,571,292 A 2/1986 Liu et al.
4,573,994 A 3/1986 Fischell et al.
4,581,336 A 4/1986 Malloy et al.
4,595,011 A 6/1986 Phillips
4,619,754 A 10/1986 Niki et al.
4,619,793 A 10/1986 Lee
4,627,445 A 12/1986 Garcia et al.
4,627,842 A 12/1986 Katz
4,627,908 A 12/1986 Miller
4,633,878 A 1/1987 Bombardieri
4,637,403 A 1/1987 Garcia et al.
4,639,062 A 1/1987 Taniguchi et al.
4,650,547 A 3/1987 Gough
4,654,197 A 3/1987 Lilja et al.
4,655,880 A 4/1987 Liu
4,655,885 A 4/1987 Hill et al.
4,671,288 A 6/1987 Gough
4,675,346 A 6/1987 Lin et al.
4,679,562 A 7/1987 Luksha
4,680,268 A 7/1987 Clark, Jr.
4,682,602 A 7/1987 Prohaska
4,684,245 A 8/1987 Goldring
4,684,537 A 8/1987 Graetzel et al.
4,685,463 A 8/1987 Williams
4,685,466 A 8/1987 Rau
4,698,057 A 10/1987 Joishy
4,703,324 A 10/1987 White
4,703,756 A 11/1987 Gough et al.

(56) **References Cited**

U.S. PATENT DOCUMENTS

4,711,245	A	12/1987	Higgins et al.
4,711,247	A	12/1987	Fishman
4,717,673	A	1/1988	Wrighton et al.
4,721,601	A	1/1988	Wrighton et al.
4,721,677	A	1/1988	Clark, Jr.
4,726,378	A	2/1988	Kaplan
4,726,716	A	2/1988	McGuire
4,729,672	A	3/1988	Takagi
4,731,726	A	3/1988	Allen, III
4,749,985	A	6/1988	Corsberg
4,755,173	A	7/1988	Konopka
4,757,022	A	7/1988	Shults et al.
4,758,323	A	7/1988	Davis et al.
4,759,371	A	7/1988	Franetzki
4,759,828	A	7/1988	Young et al.
4,764,416	A	8/1988	Ueyama et al.
4,776,944	A	10/1988	Janata et al.
4,777,953	A	10/1988	Ash et al.
4,779,618	A	10/1988	Mund et al.
4,781,798	A	11/1988	Gough
4,784,736	A	11/1988	Lonsdale et al.
4,795,707	A	1/1989	Niiyama et al.
4,796,634	A	1/1989	Huntsman et al.
4,805,624	A	2/1989	Yao et al.
4,813,424	A	3/1989	Wilkins
4,815,469	A	3/1989	Cohen et al.
4,818,994	A	4/1989	Orth et al.
4,820,399	A	4/1989	Senda et al.
4,822,337	A	4/1989	Newhouse et al.
4,830,959	A	5/1989	McNeil et al.
4,832,797	A	5/1989	Vadgama et al.
RE32,947	E	6/1989	Dormer et al.
4,840,893	A	6/1989	Hill et al.
4,848,351	A	7/1989	Finch
4,852,025	A	7/1989	Herpichböhm
4,854,322	A	8/1989	Ash et al.
4,871,351	A	10/1989	Feingold
4,871,440	A	10/1989	Nagata et al.
4,874,500	A	10/1989	Madou et al.
4,890,620	A	1/1990	Gough
4,894,137	A	1/1990	Takizawa et al.
4,895,147	A	1/1990	Bodicky et al.
4,897,162	A	1/1990	Lewandowski et al.
4,897,173	A	1/1990	Nankai et al.
4,909,908	A	3/1990	Ross et al.
4,911,794	A	3/1990	Parce et al.
4,917,800	A	4/1990	Lonsdale et al.
4,919,141	A	4/1990	Zier et al.
4,919,767	A	4/1990	Vadgama et al.
4,921,199	A	5/1990	Villaveces
4,923,586	A	5/1990	Katayama et al.
4,925,268	A	5/1990	Iyer et al.
4,927,516	A	5/1990	Yamaguchi et al.
4,934,369	A	6/1990	Maxwell
4,935,105	A	6/1990	Churchouse
4,935,345	A	6/1990	Guibeau et al.
4,938,860	A	7/1990	Wogoman
4,944,299	A	7/1990	Silvian
4,950,378	A	8/1990	Nagara
4,953,552	A	9/1990	DeMarzo
4,954,129	A	9/1990	Giuliani et al.
4,969,468	A	11/1990	Byers et al.
4,970,145	A	11/1990	Bennetto et al.
4,974,929	A	12/1990	Curry
4,986,271	A	1/1991	Wilkins
4,988,341	A	1/1991	Columbus et al.
4,994,167	A	2/1991	Shults et al.
4,995,402	A	2/1991	Smith et al.
5,000,180	A	3/1991	Kuypers et al.
5,001,054	A	3/1991	Wagner
5,002,054	A	3/1991	Ash et al.
5,006,110	A	4/1991	Garrison et al.
5,013,161	A	5/1991	Zaragoza et al.
5,019,974	A	5/1991	Beckers
5,035,860	A	7/1991	Kleingeld et al.
5,036,860	A	8/1991	Leigh et al.
5,047,044	A	9/1991	Smith et al.
5,050,612	A	9/1991	Matsumura
5,051,688	A	9/1991	Murase et al.
5,055,171	A	10/1991	Peck
5,058,592	A	10/1991	Whisler
5,068,536	A	11/1991	Rosenthal
5,070,535	A	12/1991	Hochmair et al.
5,082,550	A	1/1992	Rishpon et al.
5,082,786	A	1/1992	Nakamoto
5,089,112	A	2/1992	Skotheim et al.
5,095,904	A	3/1992	Seligman et al.
5,101,814	A	4/1992	Palti
5,106,365	A	4/1992	Hernandez
5,108,564	A	4/1992	Szuminsky et al.
5,108,889	A	4/1992	Smith et al.
5,109,850	A	5/1992	Blanco et al.
5,120,420	A	6/1992	Nankai et al.
5,122,925	A	6/1992	Inpyn
5,124,661	A	6/1992	Zellin et al.
5,126,034	A	6/1992	Carter et al.
5,133,856	A	7/1992	Yamaguchi et al.
5,135,003	A	8/1992	Souma
5,135,004	A	8/1992	Adams et al.
5,140,985	A	8/1992	Schroeder et al.
5,141,868	A	8/1992	Shanks et al.
5,161,532	A	11/1992	Joseph
5,162,407	A	11/1992	Turner
5,165,407	A	11/1992	Wilson et al.
5,174,291	A	12/1992	Schoonen et al.
5,190,041	A	3/1993	Palti
5,192,416	A	3/1993	Wang et al.
5,198,367	A	3/1993	Aizawa et al.
5,202,261	A	4/1993	Musho et al.
5,205,920	A	4/1993	Oyama et al.
5,208,154	A	5/1993	Weaver et al.
5,209,229	A	5/1993	Gilli
5,217,595	A	6/1993	Smith et al.
5,228,449	A	7/1993	Christ et al.
5,229,282	A	7/1993	Yoshioka et al.
5,234,835	A	8/1993	Nestor et al.
5,238,729	A	8/1993	Debe
5,245,314	A	9/1993	Kah et al.
5,246,867	A	9/1993	Lakowicz et al.
5,250,439	A	10/1993	Musho et al.
5,262,035	A	11/1993	Gregg et al.
5,262,305	A	11/1993	Heller et al.
5,264,103	A	11/1993	Yoshioka et al.
5,264,104	A	11/1993	Gregg et al.
5,264,105	A	11/1993	Gregg et al.
5,264,106	A	11/1993	McAleer et al.
5,271,815	A	12/1993	Wong
5,279,294	A	1/1994	Anderson
5,284,156	A	2/1994	Schramm et al.
5,285,792	A	2/1994	Sjoquist et al.
5,286,362	A	2/1994	Hoenes et al.
5,286,364	A	2/1994	Yacynych et al.
5,288,636	A	2/1994	Pollmann et al.
5,289,497	A	2/1994	Jackobson et al.
5,293,546	A	3/1994	Tadros et al.
5,293,877	A	3/1994	O'Hara et al.
5,299,571	A	4/1994	Mastrototaro
5,305,008	A	4/1994	Turner et al.
5,320,098	A	6/1994	Davidson
5,320,715	A	6/1994	Berg
5,320,725	A	6/1994	Gregg et al.
5,322,063	A	6/1994	Allen et al.
5,333,615	A	8/1994	Craelius et al.
5,337,747	A	8/1994	Neftel
5,340,722	A	8/1994	Wolfbeis et al.
5,342,789	A	8/1994	Chick et al.
5,352,348	A	10/1994	Young et al.
5,356,786	A	10/1994	Heller et al.
5,360,404	A	11/1994	Novacek et al.
5,368,028	A	11/1994	Palti
5,372,133	A	12/1994	Hogen Esch
5,372,427	A	12/1994	Padovani et al.
5,376,251	A	12/1994	Kaneko et al.
5,378,628	A	1/1995	Gratzel et al.

(56) **References Cited**

U.S. PATENT DOCUMENTS

5,379,238 A 1/1995 Stark
5,387,327 A 2/1995 Khan
5,390,671 A 2/1995 Lord et al.
5,391,250 A 2/1995 Cheney, II et al.
5,395,504 A 3/1995 Saurer et al.
5,400,782 A 3/1995 Beaubiah
5,400,794 A 3/1995 Gorman
5,408,999 A 4/1995 Singh et al.
5,410,326 A 4/1995 Goldstein
5,411,647 A 5/1995 Johnson et al.
5,425,361 A 6/1995 Fenzlein et al.
5,425,868 A 6/1995 Pedersen
5,431,160 A 7/1995 Wilkins
5,431,921 A 7/1995 Thombre
5,437,999 A 8/1995 Diebold et al.
5,462,051 A 10/1995 Oka et al.
5,462,645 A 10/1995 Albery et al.
5,469,846 A 11/1995 Khan
5,472,317 A 12/1995 Field et al.
5,482,473 A 1/1996 Lord et al.
5,489,414 A 2/1996 Schreiber et al.
5,491,474 A 2/1996 Suni et al.
5,494,562 A 2/1996 Maley et al.
5,496,453 A 3/1996 Uenoyama et al.
5,497,772 A 3/1996 Schulman et al.
5,499,243 A 3/1996 Hall
5,507,288 A 4/1996 Bocker et al.
5,509,410 A 4/1996 Hill et al.
5,514,718 A 5/1996 Lewis et al.
5,516,832 A 5/1996 Kennan et al.
5,527,288 A 6/1996 Gross et al.
5,531,878 A 7/1996 Vadgama et al.
5,532,686 A 7/1996 Urbas et al.
5,543,326 A 8/1996 Heller et al.
5,544,196 A 8/1996 Tiedmann, Jr. et al.
5,545,191 A 8/1996 Mann et al.
5,549,568 A 8/1996 Sheilds
5,551,427 A 9/1996 Altman
5,558,638 A 9/1996 Evers et al.
5,560,357 A 10/1996 Faupei et al.
5,562,713 A 10/1996 Silvian
5,565,085 A 10/1996 Ikeda et al.
5,567,302 A 10/1996 Song et al.
5,568,806 A 10/1996 Cheney, II et al.
5,569,186 A 10/1996 Lord et al.
5,575,563 A 11/1996 Chiu et al.
5,581,206 A 12/1996 Chevallier et al.
5,582,184 A 12/1996 Erickson et al.
5,582,697 A 12/1996 Ikeda et al.
5,582,698 A 12/1996 Flaherty et al.
5,584,813 A 12/1996 Livingston et al.
5,586,553 A 12/1996 Halli et al.
5,589,326 A 12/1996 Deng et al.
5,593,852 A 1/1997 Heller et al.
5,596,150 A 1/1997 Arndt et al.
5,600,301 A 2/1997 Robinson, III
5,601,435 A 2/1997 Quy
5,609,575 A 3/1997 Larson et al.
5,617,851 A 4/1997 Lipkovker
5,623,933 A 4/1997 Amano et al.
5,628,310 A 5/1997 Rao et al.
5,628,890 A 5/1997 Carter et al.
5,632,557 A 5/1997 Simons
5,634,468 A 6/1997 Platt et al.
5,651,869 A 7/1997 Yoshioka et al.
5,653,239 A 8/1997 Pompei et al.
5,659,454 A 8/1997 Vermesse
5,660,163 A 8/1997 Schulman et al.
5,665,222 A 9/1997 Heller et al.
5,670,031 A 9/1997 Hintsche et al.
5,680,858 A 10/1997 Hansen et al.
5,682,233 A 10/1997 Brinda
5,695,623 A 12/1997 Michel et al.
5,707,502 A 1/1998 McCaffrey et al.
5,708,247 A 1/1998 McAleer et al.
5,711,001 A 1/1998 Bussan et al.
5,711,297 A 1/1998 Iliff et al.
5,711,861 A 1/1998 Ward et al.
5,711,862 A 1/1998 Sakoda et al.
5,724,030 A 3/1998 Urbas et al.
5,733,044 A 3/1998 Rose et al.
5,733,259 A 3/1998 Valcke et al.
5,733,313 A 3/1998 Barreras, Sr. et al.
5,749,656 A 3/1998 Boehm et al.
5,735,285 A 4/1998 Albert et al.
5,741,211 A 4/1998 Renirie et al.
5,748,103 A 5/1998 Flach et al.
5,749,907 A 5/1998 Mann
5,758,290 A 5/1998 Nealon et al.
5,766,131 A 6/1998 Kondo et al.
5,771,001 A 6/1998 Cobb
5,772,586 A 6/1998 Heinonen et al.
5,778,879 A 7/1998 Ota et al.
5,779,665 A 7/1998 Mastrototaro et al.
5,791,344 A 8/1998 Schulman et al.
5,798,961 A 8/1998 Heyden et al.
5,800,420 A 9/1998 Gross et al.
5,804,047 A 9/1998 Kambe et al.
5,807,375 A 9/1998 Gross et al.
5,814,020 A 9/1998 Gross
5,820,551 A 10/1998 Hill et al.
5,820,622 A 10/1998 Gross et al.
5,822,715 A 10/1998 Worthington et al.
5,823,802 A 10/1998 Bartley
5,827,184 A 10/1998 Netherly et al.
5,830,064 A 11/1998 Bradish et al.
5,833,603 A 11/1998 Kovacs et al.
5,840,020 A 11/1998 Heinonen et al.
5,842,983 A 12/1998 Abel et al.
5,851,197 A 12/1998 Marano et al.
5,856,758 A 1/1999 Joffe et al.
5,858,001 A 1/1999 Tsais et al.
5,865,804 A 2/1999 Bachynsky
5,885,211 A 3/1999 Eppstein et al.
5,891,049 A 4/1999 Cyrus et al.
5,899,855 A 5/1999 Brown
5,918,603 A 7/1999 Brown
5,924,979 A 7/1999 Sedlow et al.
5,925,021 A 7/1999 Castellano et al.
5,931,814 A 8/1999 Gross et al.
5,935,224 A 8/1999 Svancarek et al.
5,942,979 A 8/1999 Luppino
5,948,006 A 9/1999 Mann
5,951,485 A 9/1999 Cyrus et al.
5,951,521 A 9/1999 Mastrototaro et al.
5,954,643 A 9/1999 Van Antwerp
5,954,685 A 9/1999 Tierny
5,957,854 A 9/1999 Besson et al.
5,961,451 A 10/1999 Reber et al.
5,964,993 A 10/1999 Blubaugh, Jr. et al.
5,965,380 A 10/1999 Heller et al.
5,971,922 A 10/1999 Arita et al.
5,972,199 A 10/1999 Heller et al.
5,987,353 A 11/1999 Khatchatrian et al.
5,993,411 A 11/1999 Choi
5,995,860 A 11/1999 Sun et al.
5,997,501 A 12/1999 Gross et al.
6,001,067 A 12/1999 Shults et al.
6,004,278 A 12/1999 Botich et al.
6,022,368 A 2/2000 Gavronsky et al.
6,024,699 A 2/2000 Surwit et al.
6,026,321 A 2/2000 Miyata et al.
6,027,459 A 2/2000 Shain et al.
6,028,413 A 2/2000 Brockmann
6,049,727 A 4/2000 Crothall
6,052,565 A 4/2000 Ishikura et al.
6,056,718 A 5/2000 Funderburk et al.
6,068,399 A 5/2000 Tseng
6,071,391 A 6/2000 Gotoh et al.
6,083,710 A 7/2000 Heller et al.
6,085,342 A 7/2000 Marholev et al.
6,088,608 A 7/2000 Schulman et al.
6,091,975 A 7/2000 Daddona et al.
6,091,976 A 7/2000 Pfeiffer et al.

(56) **References Cited**

U.S. PATENT DOCUMENTS

6,091,987	A	7/2000	Thompson
6,093,172	A	7/2000	Funderburk et al.
6,096,364	A	8/2000	Bok et al.
6,097,480	A	8/2000	Kaplan
6,102,896	A	8/2000	Roser
6,103,033	A	8/2000	Say et al.
6,117,290	A	9/2000	Say et al.
6,119,028	A	9/2000	Schulman et al.
6,120,676	A	9/2000	Heller et al.
6,121,009	A	9/2000	Heller et al.
6,121,611	A	9/2000	Lindsay et al.
6,122,351	A	9/2000	Schlueter, Jr. et al.
6,130,623	A	10/2000	MacLellan et al.
6,134,461	A	10/2000	Say et al.
6,143,164	A	11/2000	Heller et al.
6,144,837	A	11/2000	Quy
6,144,871	A	11/2000	Saito et al.
6,159,147	A	12/2000	Lichter et al.
6,161,095	A	12/2000	Brown
6,162,611	A	12/2000	Heller et al.
6,175,752	B1	1/2001	Say et al.
6,186,982	B1	2/2001	Gross et al.
6,192,891	B1	2/2001	Gravel et al.
6,198,946	B1	3/2001	Shin et al.
6,200,265	B1	3/2001	Walsh et al.
6,203,495	B1	3/2001	Bardy et al.
6,212,416	B1	4/2001	Ward et al.
6,219,574	B1	4/2001	Cormier et al.
6,233,471	B1	5/2001	Berner et al.
6,248,067	B1	6/2001	Causey, III et al.
6,254,536	B1	7/2001	DeVito
6,254,586	B1	7/2001	Mann et al.
6,270,455	B1	8/2001	Brown
6,275,717	B1	8/2001	Gross et al.
6,283,761	B1	9/2001	Joao
6,283,982	B1	9/2001	Levaughn et al.
6,284,478	B1	9/2001	Heller et al.
6,291,200	B1	9/2001	LeJeune et al.
6,293,925	B1	9/2001	Safabash et al.
6,294,997	B1	9/2001	Paratore et al.
6,295,506	B1	9/2001	Heinonen et al.
6,298,255	B1	10/2001	Cordero et al.
6,299,347	B1	10/2001	Pompei
6,299,757	B1	10/2001	Feldman et al.
6,304,766	B1	10/2001	Colvin, Jr.
6,306,104	B1	10/2001	Cunningham et al.
6,309,884	B1	10/2001	Cooper et al.
6,314,317	B1	11/2001	Willis
6,329,161	B1	12/2001	Heller et al.
6,331,244	B1	12/2001	Lewis et al.
6,336,269	B1	1/2002	Eldridge et al.
6,338,790	B1	1/2002	Feldman et al.
6,348,640	B1	2/2002	Navot et al.
6,359,444	B1	3/2002	Grimes
6,360,888	B1	3/2002	McIvor et al.
6,366,794	B1	4/2002	Moussy et al.
6,368,141	B1	4/2002	Van Antwerp et al.
6,368,274	B1	4/2002	Van Antwerp et al.
6,377,828	B1	4/2002	Chaiken et al.
6,377,894	B1	4/2002	Deweese et al.
6,379,301	B1	4/2002	Worthington et al.
6,387,048	B1	5/2002	Schulman et al.
6,400,974	B1	6/2002	Lesho
6,405,066	B1	6/2002	Essenpreis et al.
6,409,740	B1	6/2002	Kuhr et al.
6,413,393	B1	7/2002	Van Antwerp et al.
6,416,471	B1	7/2002	Kumar et al.
6,418,332	B1	7/2002	Mastrototaro et al.
6,418,346	B1	7/2002	Nelson et al.
6,424,847	B1	7/2002	Mastrototaro et al.
6,427,088	B1	7/2002	Bowman, IV et al.
6,437,679	B1	8/2002	Roques
6,440,068	B1	8/2002	Brown et al.
6,442,413	B1	8/2002	Silver
6,445,374	B2	9/2002	Albert et al.
6,461,496	B1	10/2002	Feldman et al.
6,478,736	B1	11/2002	Mault
6,482,176	B1	11/2002	Wich
6,484,045	B1	11/2002	Holker et al.
6,484,046	B1	11/2002	Say et al.
6,493,069	B1	12/2002	Nagashimada et al.
6,494,830	B1	12/2002	Wessel
6,496,729	B2	12/2002	Thompson
6,497,655	B1	12/2002	Linberg et al.
6,503,381	B1	1/2003	Gotoh et al.
6,510,344	B1	1/2003	Halpern
6,514,460	B1	2/2003	Fendrock
6,514,689	B2	2/2003	Han et al.
6,514,718	B2	2/2003	Heller et al.
6,520,326	B2	2/2003	McIvor et al.
6,522,927	B1	2/2003	Bishay et al.
6,540,891	B1	4/2003	Stewart et al.
6,544,212	B2	4/2003	Galley et al.
6,546,268	B1	4/2003	Ishikawa et al.
6,549,796	B2	4/2003	Sohrab
6,551,494	B1	4/2003	Heller et al.
6,554,798	B1	4/2003	Lam et al.
6,558,320	B1	5/2003	Causey, III et al.
6,558,321	B1	5/2003	Burd et al.
6,558,351	B1	5/2003	Steil et al.
6,560,471	B1	5/2003	Heller et al.
6,561,975	B1	5/2003	Pool et al.
6,561,978	B1	5/2003	Conn et al.
6,562,001	B2	5/2003	Lebel et al.
6,564,105	B2	5/2003	Starkweather et al.
6,565,509	B1	5/2003	Say et al.
6,571,128	B2	5/2003	Lebel et al.
6,572,566	B2	6/2003	Effenhauser
6,574,510	B2	6/2003	Von Arx et al.
6,576,101	B1	6/2003	Heller et al.
6,577,899	B2	6/2003	Lebel et al.
6,579,231	B1	6/2003	Phipps
6,579,690	B1	6/2003	Bonnecaze et al.
6,585,644	B2	7/2003	Lebel et al.
6,589,229	B1	7/2003	Connelly et al.
6,591,125	B1	7/2003	Buse et al.
6,592,745	B1	7/2003	Feldman et al.
6,595,919	B2	7/2003	Berner et al.
6,600,997	B2	7/2003	Deweese et al.
6,603,995	B1	8/2003	Carter
6,604,050	B2	8/2003	Trippel et al.
6,605,200	B1	8/2003	Mao et al.
6,605,201	B1	8/2003	Mao et al.
6,607,509	B2	8/2003	Bobroff et al.
6,608,562	B1	8/2003	Kimura et al.
6,610,012	B2	8/2003	Mault
6,611,206	B2	8/2003	Eshelman et al.
6,616,819	B1	9/2003	Liamos et al.
6,618,934	B1	9/2003	Feldman et al.
6,627,154	B1	9/2003	Goodman et al.
6,633,772	B2	10/2003	Ford et al.
6,635,014	B2	10/2003	Starkweather et al.
6,635,167	B1	10/2003	Batman et al.
6,641,533	B2	11/2003	Causey, III et al.
6,645,359	B1	11/2003	Bhullar et al.
6,648,821	B2	11/2003	Lebel et al.
6,650,471	B2	11/2003	Doi
6,654,625	B1	11/2003	Say et al.
6,656,114	B1	12/2003	Poulson et al.
6,658,396	B1	12/2003	Tang et al.
6,659,948	B2	12/2003	Lebel et al.
6,662,439	B1	12/2003	Bhullar
6,668,196	B1	12/2003	Villegas et al.
6,676,290	B1	1/2004	Lu
6,676,816	B2	1/2004	Mao et al.
6,687,546	B2	2/2004	Lebel et al.
6,689,056	B1	2/2004	Kilcoyne et al.
6,694,191	B2	2/2004	Starkweather et al.
6,695,860	B1	2/2004	Ward et al.
6,698,269	B2	3/2004	Baber et al.
6,699,188	B2	3/2004	Wessel
6,702,857	B2	3/2004	Brauker et al.
6,706,159	B2	3/2004	Moerman et al.
6,730,072	B2	5/2004	Shawgo et al.

(56) **References Cited**

U.S. PATENT DOCUMENTS

6,730,200	B1	5/2004	Stewart et al.
6,731,976	B2	5/2004	Penn et al.
6,733,446	B2	5/2004	Lebel et al.
6,735,183	B2	5/2004	O'Toole et al.
6,735,479	B2	5/2004	Fabian et al.
6,736,957	B1	5/2004	Forrow et al.
6,740,075	B2	5/2004	Lebel et al.
6,741,877	B1	5/2004	Shults et al.
6,746,582	B2	6/2004	Heller et al.
6,748,445	B1	6/2004	Darcey et al.
6,749,740	B2	6/2004	Liamos et al.
6,758,810	B2	7/2004	Lebel et al.
6,764,581	B1	7/2004	Forrow et al.
6,767,440	B1	7/2004	Bhullar et al.
6,770,030	B1	8/2004	Schaupp et al.
6,773,671	B1	8/2004	Lewis et al.
6,781,522	B2	8/2004	Sleva et al.
6,790,178	B1	9/2004	Mault et al.
6,804,558	B2	10/2004	Haller et al.
6,804,561	B2	10/2004	Stover
6,809,653	B1	10/2004	Mann et al.
6,810,290	B2	10/2004	Lebel et al.
6,811,533	B2	11/2004	Lebel et al.
6,811,534	B2	11/2004	Bowman, IV et al.
6,813,519	B2	11/2004	Lebel et al.
6,830,551	B1	12/2004	Uchigaki et al.
6,837,858	B2	1/2005	Cunningham et al.
6,837,988	B2	1/2005	Leong et al.
6,849,052	B2	2/2005	Ughigaki et al.
6,850,790	B2	2/2005	Berner et al.
6,854,882	B2	2/2005	Chen
6,862,465	B2	3/2005	Shults et al.
6,873,268	B2	3/2005	Lebel et al.
6,878,112	B2	4/2005	Linberg et al.
6,881,551	B2	4/2005	Heller et al.
6,892,085	B2	5/2005	McIvor et al.
6,893,545	B2	5/2005	Gotoh et al.
6,895,263	B2	5/2005	Shin et al.
6,895,265	B2	5/2005	Silver
6,923,764	B2	8/2005	Aceti et al.
6,931,327	B2	8/2005	Goode, Jr. et al.
6,932,894	B2	8/2005	Mao et al.
6,936,006	B2	8/2005	Sabra
6,937,222	B2	8/2005	Numao
6,940,403	B2	9/2005	Kail, IV
6,941,163	B2	9/2005	Ford et al.
6,942,518	B2	9/2005	Liamos et al.
6,950,708	B2	9/2005	Bowman IV et al.
6,958,705	B2	10/2005	Lebel et al.
6,959,211	B2	10/2005	Rule et al.
6,968,294	B2	11/2005	Gutta et al.
6,971,274	B2	12/2005	Olin
6,971,999	B2	12/2005	Py et al.
6,973,706	B2	12/2005	Say et al.
6,974,437	B2	12/2005	Lebel et al.
6,983,867	B1	1/2006	Fugere
6,990,366	B2	1/2006	Say et al.
6,997,907	B2	2/2006	Safabash et al.
6,998,247	B2	2/2006	Monfre et al.
7,003,336	B2	2/2006	Holker et al.
7,003,340	B2	2/2006	Say et al.
7,003,341	B2	2/2006	Say et al.
7,009,511	B2	3/2006	Mazar et al.
7,020,508	B2	3/2006	Stivoric et al.
7,022,072	B2	4/2006	Fox et al.
7,024,236	B2	4/2006	Ford et al.
7,024,245	B2	4/2006	Lebel et al.
7,025,743	B2	4/2006	Mann et al.
7,027,931	B1	4/2006	Jones et al.
7,029,444	B2	4/2006	Shin et al.
7,041,068	B2	5/2006	Freeman et al.
7,041,468	B2	5/2006	Drucker et al.
7,043,305	B2	5/2006	KenKnight et al.
7,052,483	B2	5/2006	Wojcik
7,056,302	B2	6/2006	Douglas
7,058,453	B2	6/2006	Nelson et al.
7,060,031	B2	6/2006	Webb et al.
7,073,246	B2	7/2006	Bhullar et al.
7,074,307	B2	7/2006	Simpson et al.
7,081,195	B2	7/2006	Simpson et al.
7,082,334	B2	7/2006	Boute et al.
7,097,637	B2	8/2006	Triplett et al.
7,098,803	B2	8/2006	Mann et al.
7,108,778	B2	9/2006	Simpson et al.
7,110,803	B2	9/2006	Shults et al.
7,113,821	B1	9/2006	Sun et al.
7,118,667	B2	10/2006	Lee
7,124,027	B1	10/2006	Ernst et al.
7,125,382	B2	10/2006	Zhou et al.
7,134,999	B2	11/2006	Brauker et al.
7,136,689	B2	11/2006	Shults et al.
7,154,398	B2	12/2006	Chen et al.
7,155,290	B2	12/2006	Von Arx et al.
7,167,818	B2	1/2007	Brown
7,171,274	B2	1/2007	Starkweather et al.
7,190,988	B2	3/2007	Say et al.
7,192,450	B2	3/2007	Brauker et al.
7,198,606	B2	4/2007	Boecker et al.
7,203,549	B2	4/2007	Schommer et al.
7,207,974	B2	4/2007	Safabash et al.
7,220,387	B2	5/2007	Flaherty et al.
7,225,535	B2	6/2007	Feldman et al.
7,226,442	B2	6/2007	Sheppard et al.
7,226,978	B2	6/2007	Tapsak et al.
7,228,162	B2	6/2007	Ward et al.
7,228,182	B2	6/2007	Healy et al.
7,237,712	B2	7/2007	DeRocco et al.
7,267,665	B2	9/2007	Steil et al.
7,276,029	B2	10/2007	Goode, Jr. et al.
7,276,146	B2	10/2007	Wilsey
7,276,147	B2	10/2007	Wilsey
7,278,983	B2	10/2007	Ireland et al.
7,286,894	B1	10/2007	Grant et al.
7,287,318	B2	10/2007	Bhullar et al.
7,291,497	B2	11/2007	Holmes et al.
7,295,867	B2	11/2007	Berner et al.
7,297,151	B2	11/2007	Boecker et al.
7,299,082	B2	11/2007	Feldman et al.
7,310,544	B2	12/2007	Brister et al.
7,318,816	B2	1/2008	Bobroff et al.
7,324,012	B2	1/2008	Mann et al.
7,324,850	B2	1/2008	Persen et al.
7,329,239	B2	2/2008	Safabash et al.
7,335,294	B2	2/2008	Heller et al.
7,340,309	B2	3/2008	Miazga et al.
7,347,819	B2	3/2008	Lebel et al.
7,354,420	B2	4/2008	Steil et al.
7,364,592	B2	4/2008	Carr-Brendel et al.
7,366,556	B2	4/2008	Brister et al.
7,379,765	B2	5/2008	Petisce et al.
7,381,184	B2	6/2008	Funderburk et al.
7,384,397	B2	6/2008	Zhang et al.
7,386,937	B2	6/2008	Bhullar et al.
7,387,010	B2	6/2008	Sunshine et al.
7,399,277	B2	7/2008	Saidara et al.
7,401,111	B1	7/2008	Batman et al.
7,402,153	B2	7/2008	Steil et al.
7,404,796	B2	7/2008	Ginsberg
7,407,493	B2	8/2008	Cane
7,408,132	B2	8/2008	Wambsganss et al.
7,416,541	B2	8/2008	Yuzhakov et al.
7,419,573	B2	9/2008	Gundel
7,424,318	B2	9/2008	Brister et al.
7,455,663	B2	11/2008	Bikovsky
7,460,898	B2	12/2008	Brister et al.
7,467,003	B2	12/2008	Brister et al.
7,471,972	B2	12/2008	Rhodes et al.
7,492,254	B2	2/2009	Bandy et al.
7,494,465	B2	2/2009	Brister et al.
7,497,827	B2	3/2009	Brister et al.
7,519,408	B2	4/2009	Rasdal et al.
7,547,281	B2	6/2009	Hayes et al.
7,565,197	B2	7/2009	Haubrich et al.
7,568,619	B2	8/2009	Todd et al.

(56) **References Cited**

U.S. PATENT DOCUMENTS

7,569,030	B2	8/2009	Lebel et al.
7,574,266	B2	8/2009	Dudding et al.
7,583,990	B2	9/2009	Goode, Jr. et al.
7,591,801	B2	9/2009	Brauker et al.
7,599,726	B2	10/2009	Goode, Jr. et al.
7,602,310	B2	10/2009	Mann et al.
7,604,178	B2	10/2009	Stewart
7,604,592	B2	10/2009	Freeman et al.
7,613,491	B2	11/2009	Boock et al.
7,615,007	B2	11/2009	Shults et al.
7,618,369	B2	11/2009	Hayter et al.
7,632,228	B2	12/2009	Brauker et al.
7,637,868	B2	12/2009	Saint et al.
7,640,048	B2	12/2009	Dobbles et al.
7,643,798	B2	1/2010	Ljung
7,651,596	B2	1/2010	Petisce et al.
7,653,425	B2	1/2010	Hayter et al.
7,654,956	B2	2/2010	Brister et al.
7,657,297	B2	2/2010	Simpson et al.
7,659,823	B1	2/2010	Killian et al.
7,666,149	B2	2/2010	Simons et al.
7,668,596	B2	2/2010	Von Arx et al.
7,697,967	B2	4/2010	Stafford
7,699,807	B2	4/2010	Faust et al.
7,701,052	B2	4/2010	Borland et al.
7,711,402	B2	5/2010	Shults et al.
7,713,574	B2	5/2010	Brister et al.
7,715,893	B2	5/2010	Kamath et al.
7,727,147	B1	6/2010	Osorio et al.
7,731,657	B2	6/2010	Stafford
7,736,344	B2	6/2010	Moberg et al.
7,741,734	B2	6/2010	Joannopoulos et al.
7,763,042	B2	7/2010	Iio et al.
7,768,387	B2	8/2010	Fennell et al.
7,771,352	B2	8/2010	Shults et al.
7,774,145	B2	8/2010	Brauker et al.
7,778,680	B2	8/2010	Goode, Jr. et al.
7,779,332	B2	8/2010	Karr et al.
7,782,192	B2	8/2010	Jeckelmann et al.
7,783,333	B2	8/2010	Brister et al.
7,791,467	B2	9/2010	Mazar et al.
7,792,562	B2	9/2010	Shults et al.
7,813,809	B2	10/2010	Strother et al.
7,822,454	B1	10/2010	Alden et al.
7,826,981	B2	11/2010	Goode, Jr. et al.
7,831,310	B2	11/2010	Lebel et al.
7,833,151	B2	11/2010	Khait et al.
7,850,652	B2	12/2010	Liniger et al.
7,860,574	B2	12/2010	Von Arx et al.
7,866,026	B1	1/2011	Wang et al.
7,882,611	B2	2/2011	Shah et al.
7,889,069	B2	2/2011	Fifolt et al.
7,896,844	B2	3/2011	Thalmann et al.
7,899,511	B2	3/2011	Shults et al.
7,905,833	B2	3/2011	Brister et al.
7,912,655	B2	3/2011	Power et al.
7,912,674	B2	3/2011	Killoren Clark et al.
7,914,450	B2	3/2011	Goode, Jr. et al.
7,916,013	B2	3/2011	Stevenson
7,955,258	B2	6/2011	Goscha et al.
7,955,297	B2	6/2011	Radmer et al.
7,970,448	B2	6/2011	Shults et al.
7,974,672	B2	7/2011	Shults et al.
7,976,467	B2	7/2011	Young et al.
7,978,063	B2	7/2011	Baldus et al.
7,985,203	B2	7/2011	Haueter et al.
7,999,674	B2	8/2011	Kamen
8,000,918	B2	8/2011	Fjield et al.
8,072,310	B1	12/2011	Everhart
8,090,445	B2	1/2012	Ginggen
8,093,991	B2	1/2012	Stevenson et al.
8,094,009	B2	1/2012	Allen et al.
8,098,159	B2	1/2012	Batra et al.
8,098,160	B2	1/2012	Howarth et al.
8,098,161	B2	1/2012	Lavedas
8,098,201	B2	1/2012	Choi et al.
8,098,208	B2	1/2012	Ficker et al.
8,102,021	B2	1/2012	Degani
8,102,154	B2	1/2012	Bishop et al.
8,102,263	B2	1/2012	Yeo et al.
8,102,789	B2	1/2012	Rosar et al.
8,103,241	B2	1/2012	Young et al.
8,103,325	B2	1/2012	Swedlow et al.
8,111,042	B2	2/2012	Bennett
8,115,488	B2	2/2012	McDowell
8,116,681	B2	2/2012	Baarman
8,116,683	B2	2/2012	Baarman
8,117,481	B2	2/2012	Anselmi et al.
8,120,493	B2	2/2012	Burr
8,124,452	B2	2/2012	Sheats
8,130,093	B2	3/2012	Mazar et al.
8,131,351	B2	3/2012	Kalgren et al.
8,131,365	B2	3/2012	Zhang et al.
8,131,565	B2	3/2012	Dicks et al.
8,132,037	B2	3/2012	Fehr et al.
8,135,352	B2	3/2012	Langsweirdt et al.
8,136,735	B2	3/2012	Arai et al.
8,138,925	B2	3/2012	Downie et al.
8,140,160	B2	3/2012	Pless et al.
8,140,168	B2	3/2012	Olson et al.
8,140,299	B2	3/2012	Siess
8,150,321	B2	4/2012	Winter et al.
8,150,516	B2	4/2012	Levine et al.
8,172,805	B2	5/2012	Mogensen et al.
8,179,266	B2	5/2012	Hermle
8,262,618	B2	9/2012	Scheurer
8,409,145	B2	4/2013	Raymond et al.
8,538,512	B1	9/2013	Bibian et al.
8,617,069	B2	12/2013	Bernstein et al.
8,808,515	B2	8/2014	Feldman et al.
8,870,822	B2	10/2014	Thalmann et al.
8,880,138	B2	11/2014	Cho
9,259,175	B2	2/2016	Stafford
9,295,786	B2	3/2016	Gottlieb et al.
2001/0016682	A1	8/2001	Berner et al.
2001/0037060	A1	11/2001	Thompson et al.
2001/0037366	A1	11/2001	Webb et al.
2001/0047127	A1	11/2001	New et al.
2001/0056262	A1	12/2001	Cabiri et al.
2002/0010390	A1	1/2002	Guice et al.
2002/0013522	A1	1/2002	Lav et al.
2002/0013538	A1	1/2002	Teller
2002/0019022	A1	2/2002	Dunn et al.
2002/0019584	A1	2/2002	Schulze et al.
2002/0019606	A1	2/2002	Lebel et al.
2002/0022855	A1	2/2002	Bobroff et al.
2002/0023852	A1	2/2002	Mclvor et al.
2002/0039026	A1	4/2002	Stroth et al.
2002/0042090	A1	4/2002	Heller et al.
2002/0045808	A1	4/2002	Ford et al.
2002/0049482	A1	4/2002	Fabian et al.
2002/0050250	A1	5/2002	Peterson et al.
2002/0055711	A1	5/2002	Lavi et al.
2002/0065454	A1	5/2002	Lebel et al.
2002/0072784	A1	6/2002	Sheppard et al.
2002/0074162	A1	6/2002	Su et al.
2002/0082487	A1	6/2002	Kollias et al.
2002/0084196	A1	7/2002	Liamos et al.
2002/0091796	A1	7/2002	Higginson et al.
2002/0093969	A1	7/2002	Lin et al.
2002/0103499	A1	8/2002	Perez et al.
2002/0106709	A1	8/2002	Potts et al.
2002/0118528	A1	8/2002	Su et al.
2002/0119711	A1	8/2002	VanAntwerp et al.
2002/0128594	A1	9/2002	Das et al.
2002/0130042	A1	9/2002	Moerman et al.
2002/0151770	A1	10/2002	Noll et al.
2002/0154050	A1	10/2002	Krupp et al.
2002/0161288	A1	10/2002	Shin et al.
2002/0164836	A1	11/2002	Ho
2002/0165462	A1	11/2002	Westbrook et al.
2002/0169369	A1	11/2002	Ward et al.
2002/0169635	A1	11/2002	Shillingburg
2002/0183604	A1	12/2002	Gowda et al.

(56) **References Cited**

U.S. PATENT DOCUMENTS

2002/0185128 A1 12/2002 Theobald
2002/0185130 A1 12/2002 Wright et al.
2002/0197522 A1 12/2002 Lawrence et al.
2002/0198444 A1 12/2002 Ughigaki et al.
2003/0004403 A1 1/2003 Drinan et al.
2003/0020477 A1 1/2003 Goldstein
2003/0023317 A1 1/2003 Brauker et al.
2003/0023461 A1 1/2003 Quintanilla et al.
2003/0032867 A1 2/2003 Crothall et al.
2003/0032874 A1 2/2003 Rhodes et al.
2003/0042137 A1 3/2003 Mao et al.
2003/0060692 A1 3/2003 Ruchti et al.
2003/0060753 A1 3/2003 Starkweather et al.
2003/0065308 A1 4/2003 Lebel et al.
2003/0069510 A1 4/2003 Semler
2003/0076792 A1 4/2003 Theimer
2003/0077642 A1 4/2003 Fritsch et al.
2003/0078481 A1 4/2003 McIvor et al.
2003/0078560 A1 4/2003 Miller et al.
2003/0088166 A1 5/2003 Say et al.
2003/0097092 A1 5/2003 Flaherty
2003/0100040 A1 5/2003 Bonnecaze et al.
2003/0100821 A1 5/2003 Heller et al.
2003/0109775 A1 6/2003 O'Neil et al.
2003/0114897 A1 6/2003 Von Arx et al.
2003/0114898 A1 6/2003 Von Arx et al.
2003/0119457 A1 6/2003 Standke
2003/0125612 A1 7/2003 Fox et al.
2003/0130616 A1 7/2003 Steil et al.
2003/0134347 A1 7/2003 Heller et al.
2003/0135333 A1 7/2003 Aceti et al.
2003/0144579 A1 7/2003 Buss
2003/0144581 A1 7/2003 Conn et al.
2003/0144608 A1 7/2003 Kojima et al.
2003/0153900 A1 8/2003 Aceti et al.
2003/0155656 A1 8/2003 Chiu et al.
2003/0168338 A1 9/2003 Gao et al.
2003/0176933 A1 9/2003 Lebel et al.
2003/0187338 A1 10/2003 Say et al.
2003/0188427 A1 10/2003 Say et al.
2003/0199790 A1 10/2003 Boecker et al.
2003/0199910 A1 10/2003 Boecker et al.
2003/0204290 A1 10/2003 Sadler et al.
2003/0208113 A1 11/2003 Mault et al.
2003/0208114 A1 11/2003 Ackerman
2003/0212317 A1 11/2003 Kovatchev et al.
2003/0212379 A1 11/2003 Bylund et al.
2003/0212579 A1 11/2003 Brown et al.
2003/0216621 A1 11/2003 Alpert et al.
2003/0216630 A1 11/2003 Jersey-Willuhn et al.
2003/0217966 A1 11/2003 Tapsak et al.
2003/0225361 A1 12/2003 Sabra
2004/0002682 A1 1/2004 Kovelman et al.
2004/0010207 A1 1/2004 Flaherty et al.
2004/0011671 A1 1/2004 Shults et al.
2004/0017300 A1 1/2004 Kotzin et al.
2004/0030226 A1 2/2004 Quy
2004/0030531 A1 2/2004 Miller et al.
2004/0030581 A1 2/2004 Levin et al.
2004/0039255 A1 2/2004 Simonsen et al.
2004/0039298 A1 2/2004 Abreu
2004/0040840 A1 3/2004 Mao et al.
2004/0045879 A1 3/2004 Shults et al.
2004/0054263 A1 3/2004 Moerman et al.
2004/0060818 A1 4/2004 Feldman et al.
2004/0061232 A1 4/2004 Shah et al.
2004/0063435 A1 4/2004 Sakamoto et al.
2004/0064068 A1 4/2004 DeNuzzio et al.
2004/0064133 A1 4/2004 Miller et al.
2004/0096959 A1 5/2004 Steine et al.
2004/0100376 A1 5/2004 Lye et al.
2004/0105411 A1 6/2004 Boatwright et al.
2004/0106858 A1 6/2004 Say et al.
2004/0106859 A1 6/2004 Say et al.
2004/0116847 A1 6/2004 Wall
2004/0122353 A1 6/2004 Shahmirian et al.
2004/0122489 A1 6/2004 Mazar et al.
2004/0116866 A1 7/2004 Gorman et al.
2004/0133164 A1 7/2004 Funderburk et al.
2004/0135684 A1 7/2004 Steinthal et al.
2004/0138544 A1 7/2004 Ward et al.
2004/0138588 A1 7/2004 Saikley et al.
2004/0138688 A1 7/2004 Giraud
2004/0146909 A1 7/2004 Duong et al.
2004/0147996 A1 7/2004 Miazga et al.
2004/0152622 A1 8/2004 Keith et al.
2004/0158207 A1 8/2004 Hunn et al.
2004/0167801 A1 8/2004 Say et al.
2004/0171910 A1 9/2004 Moore-Steele
2004/0171921 A1 9/2004 Say et al.
2004/0176672 A1 9/2004 Silver et al.
2004/0186362 A1 9/2004 Brauker et al.
2004/0186365 A1 9/2004 Jin et al.
2004/0193020 A1 9/2004 Chiba et al.
2004/0193025 A1 9/2004 Steil et al.
2004/0193090 A1 9/2004 Lebel et al.
2004/0197846 A1 10/2004 Hockersmith et al.
2004/0199056 A1 10/2004 Husemann et al.
2004/0199059 A1 10/2004 Brauker et al.
2004/0204687 A1 10/2004 Mogensen et al.
2004/0204744 A1 10/2004 Penner et al.
2004/0204868 A1 10/2004 Maynard et al.
2004/0206625 A1 10/2004 Bhullar et al.
2004/0206916 A1 10/2004 Colvin, Jr. et al.
2004/0221057 A1 11/2004 Darcey et al.
2004/0223876 A1 11/2004 Kirollos et al.
2004/0223985 A1 11/2004 Dunfield et al.
2004/0225199 A1 11/2004 Evanyk et al.
2004/0225338 A1 11/2004 Lebel et al.
2004/0236200 A1 11/2004 Say et al.
2004/0236251 A1 11/2004 Roe et al.
2004/0240426 A1 12/2004 Wu et al.
2004/0249999 A1 12/2004 Connolly et al.
2004/0254433 A1 12/2004 Bandis et al.
2004/0254434 A1 12/2004 Goodnow et al.
2004/0258564 A1 12/2004 Charlton
2004/0267300 A1 12/2004 Mace
2005/0001024 A1 1/2005 Kusaka et al.
2005/0003470 A1 1/2005 Nelson et al.
2005/0004439 A1 1/2005 Shin et al.
2005/0004494 A1 1/2005 Perez et al.
2005/0010269 A1 1/2005 Lebel et al.
2005/0017864 A1 1/2005 Tsoukalis
2005/0027177 A1 2/2005 Shin et al.
2005/0027180 A1 2/2005 Goode, Jr. et al.
2005/0027181 A1 2/2005 Goode, Jr. et al.
2005/0027463 A1 2/2005 Goode, Jr. et al.
2005/0031689 A1 2/2005 Shults et al.
2005/0038332 A1 2/2005 Saidara et al.
2005/0043598 A1 2/2005 Goode, Jr. et al.
2005/0070819 A1 3/2005 Poux et al.
2005/0085872 A1 4/2005 Yanagihara et al.
2005/0090607 A1 4/2005 Tapsak et al.
2005/0090850 A1 4/2005 Thoes et al.
2005/0096511 A1 5/2005 Fox et al.
2005/0096512 A1 5/2005 Fox et al.
2005/0103624 A1 5/2005 Bhullar et al.
2005/0104457 A1 5/2005 Jordan et al.
2005/0106713 A1 5/2005 Phan et al.
2005/0112169 A1 5/2005 Brauker et al.
2005/0112544 A1 5/2005 Xu et al.
2005/0113653 A1 5/2005 Fox et al.
2005/0113886 A1 5/2005 Fischell et al.
2005/0114068 A1 5/2005 Chey et al.
2005/0116683 A1 6/2005 Cheng et al.
2005/0121322 A1 6/2005 Say et al.
2005/0131346 A1 6/2005 Douglas
2005/0137488 A1 6/2005 Henry et al.
2005/0137530 A1 6/2005 Campbell et al.
2005/0143635 A1 6/2005 Kamath et al.
2005/0151976 A1 7/2005 Toma
2005/0154410 A1 7/2005 Conway et al.
2005/0165404 A1 7/2005 Miller
2005/0171442 A1 8/2005 Shirasaki et al.

(56) **References Cited**

U.S. PATENT DOCUMENTS

2005/0173245 A1 8/2005 Feldman et al.
2005/0176136 A1 8/2005 Burd et al.
2005/0177398 A1 8/2005 Watanabe et al.
2005/0181010 A1 8/2005 Hunter et al.
2005/0182306 A1 8/2005 Sloan
2005/0182358 A1 8/2005 Veit et al.
2005/0187720 A1 8/2005 Goode, Jr. et al.
2005/0192494 A1 9/2005 Ginsberg
2005/0192557 A1 9/2005 Brauker et al.
2005/0195930 A1 9/2005 Spital et al.
2005/0197554 A1 9/2005 Polcha
2005/0199494 A1 9/2005 Say et al.
2005/0203360 A1 9/2005 Brauker et al.
2005/0204134 A1 9/2005 Von Arx et al.
2005/0215871 A1 9/2005 Feldman et al.
2005/0221504 A1 10/2005 Petruno et al.
2005/0222518 A1 10/2005 Dib
2005/0222599 A1 10/2005 Czemecki et al.
2005/0236277 A9 10/2005 Imran et al.
2005/0236361 A1 10/2005 Ufer et al.
2005/0239154 A1 10/2005 Feldman et al.
2005/0239156 A1 10/2005 Drucker et al.
2005/0241957 A1 11/2005 Mao et al.
2005/0245795 A1 11/2005 Goode, Jr. et al.
2005/0245799 A1 11/2005 Brauker et al.
2005/0245839 A1 11/2005 Stivoric et al.
2005/0245844 A1 11/2005 Mace et al.
2005/0245904 A1 11/2005 Estes et al.
2005/0247319 A1 11/2005 Berger
2005/0251033 A1 11/2005 Scarantino et al.
2005/0261563 A1 11/2005 Zhou et al.
2005/0267325 A1 12/2005 Bouchier et al.
2005/0277164 A1 12/2005 Drucker et al.
2005/0283114 A1 12/2005 Bresina et al.
2005/0283208 A1 12/2005 Von Arx et al.
2005/0283209 A1 12/2005 Katoozi et al.
2005/0284758 A1 12/2005 Funke et al.
2005/0287620 A1 12/2005 Heller et al.
2006/0001538 A1 1/2006 Kraft et al.
2006/0001551 A1 1/2006 Kraft et al.
2006/0004270 A1 1/2006 Bedard et al.
2006/0004272 A1 1/2006 Shah et al.
2006/0004303 A1 1/2006 Weidenhaupt et al.
2006/0009727 A1 1/2006 O'Mahony et al.
2006/0010098 A1 1/2006 Goodnow et al.
2006/0012464 A1 1/2006 Nitzan et al.
2006/0015020 A1 1/2006 Neale et al.
2006/0015024 A1 1/2006 Brister et al.
2006/0016700 A1* 1/2006 Brister A61B 5/6848 205/777.5
2006/0019327 A1 1/2006 Brister et al.
2006/0020186 A1 1/2006 Brister et al.
2006/0020187 A1 1/2006 Brister et al.
2006/0020188 A1 1/2006 Kamath et al.
2006/0020189 A1 1/2006 Brister et al.
2006/0020190 A1 1/2006 Kamath et al.
2006/0020191 A1 1/2006 Brister et al.
2006/0020192 A1 1/2006 Brister et al.
2006/0020300 A1 1/2006 Nghiem et al.
2006/0025662 A1 2/2006 Buse et al.
2006/0025663 A1 2/2006 Talbot et al.
2006/0029177 A1 2/2006 Cranford, Jr. et al.
2006/0031094 A1 2/2006 Cohen et al.
2006/0036139 A1 2/2006 Brister et al.
2006/0036140 A1 2/2006 Brister et al.
2006/0036141 A1 2/2006 Kamath et al.
2006/0036142 A1 2/2006 Brister et al.
2006/0036143 A1 2/2006 Brister et al.
2006/0036144 A1 2/2006 Brister et al.
2006/0040793 A1 2/2006 Martens et al.
2006/0042080 A1 3/2006 Say et al.
2006/0047220 A1 3/2006 Sakata et al.
2006/0049359 A1 3/2006 Busta et al.
2006/0058588 A1 3/2006 Zdeblick
2006/0064035 A1 3/2006 Wang et al.
2006/0036145 A1 4/2006 Chambers et al.
2006/0081469 A1 4/2006 Lee
2006/0091006 A1 5/2006 Wang et al.
2006/0129173 A1 6/2006 Wilkinson
2006/0129733 A1 6/2006 Solbelman
2006/0142651 A1 6/2006 Brister et al.
2006/0154642 A1 7/2006 Scannell
2006/0155180 A1 7/2006 Brister et al.
2006/0155210 A1 7/2006 Beckman et al.
2006/0155317 A1 7/2006 List
2006/0161664 A1 7/2006 Mastrototaro et al.
2006/0166629 A1 7/2006 Reggiardo
2006/0173260 A1 8/2006 Gaoni et al.
2006/0173406 A1 8/2006 Hayes et al.
2006/0173444 A1 8/2006 Choy et al.
2006/0183984 A1 8/2006 Dobbles et al.
2006/0183985 A1 8/2006 Brister et al.
2006/0189863 A1 8/2006 Peyser et al.
2006/0189939 A1 8/2006 Gonnelli et al.
2006/0193375 A1 8/2006 Lee et al.
2006/0195029 A1 8/2006 Shults et al.
2006/0200970 A1 9/2006 Brister et al.
2006/0200981 A1 9/2006 Bhullar et al.
2006/0200982 A1 9/2006 Bhullar et al.
2006/0202805 A1 9/2006 Schulman et al.
2006/0202859 A1 9/2006 Mastrototaro et al.
2006/0220839 A1 10/2006 Fifolt et al.
2006/0222566 A1 10/2006 Brauker et al.
2006/0224109 A1 10/2006 Steil et al.
2006/0224141 A1 10/2006 Rush et al.
2006/0224171 A1 10/2006 Sakata et al.
2006/0226985 A1 10/2006 Goodnow et al.
2006/0229512 A1 10/2006 Petisce et al.
2006/0233839 A1 10/2006 Jacquet
2006/0247508 A1 11/2006 Fennell
2006/0247710 A1 11/2006 Goetz et al.
2006/0248398 A1 11/2006 Neel et al.
2006/0253085 A1 11/2006 Geismar et al.
2006/0253086 A1 11/2006 Moberg et al.
2006/0258929 A1 11/2006 Goode, Jr. et al.
2006/0264785 A1 11/2006 Dring et al.
2006/0264888 A1 11/2006 Moberg et al.
2006/0270922 A1 11/2006 Brauker et al.
2006/0272652 A1 12/2006 Stocker et al.
2006/0276714 A1 12/2006 Holt et al.
2006/0276724 A1 12/2006 Freeman et al.
2006/0276771 A1 12/2006 Galley et al.
2006/0287591 A1 12/2006 Ocvirk et al.
2006/0287691 A1 12/2006 Drew
2006/0290496 A1 12/2006 Peeters et al.
2006/0293607 A1 12/2006 Alt et al.
2007/0016381 A1 1/2007 Kamath et al.
2007/0017983 A1 1/2007 Frank et al.
2007/0027381 A1 2/2007 Stafford
2007/0027507 A1 2/2007 Burdett et al.
2007/0030154 A1 2/2007 Aiki et al.
2007/0032706 A1 2/2007 Kamath et al.
2007/0033074 A1 2/2007 Nitzan et al.
2007/0038044 A1 2/2007 Dobbies et al.
2007/0055799 A1 3/2007 Koehler et al.
2007/0056858 A1 3/2007 Chen et al.
2007/0059196 A1 3/2007 Brister et al.
2007/0060814 A1 3/2007 Stafford
2007/0066873 A1 3/2007 Kamath et al.
2007/0068807 A1 3/2007 Feldman et al.
2007/0071681 A1 3/2007 Gadkar et al.
2007/0073129 A1 3/2007 Shah et al.
2007/0078320 A1 4/2007 Stafford
2007/0078321 A1 4/2007 Mazza et al.
2007/0078322 A1 4/2007 Stafford
2007/0078323 A1 4/2007 Reggiardo et al.
2007/0090511 A1 4/2007 Borland et al.
2007/0095661 A1 5/2007 Wang et al.
2007/0100218 A1 5/2007 Sweitzer et al.
2007/0100222 A1 5/2007 Mastrototaro et al.
2007/0106133 A1 5/2007 Satchwell et al.
2007/0106135 A1 5/2007 Sloan et al.
2007/0108048 A1 5/2007 Wang et al.
2007/0110124 A1 5/2007 Zaragoza et al.

(56) **References Cited**

U.S. PATENT DOCUMENTS

2007/0111196 A1 5/2007 Alarcon et al.
2007/0123819 A1 5/2007 Memoe et al.
2007/0124002 A1 5/2007 Estes et al.
2007/0129621 A1 6/2007 Kellogg et al.
2007/0149875 A1 6/2007 Ouyang et al.
2007/0156033 A1 7/2007 Causey, III et al.
2007/0156094 A1 7/2007 Safabash et al.
2007/0163880 A1 7/2007 Woo et al.
2007/0168224 A1 7/2007 Letzt et al.
2007/0173706 A1 7/2007 Neinast et al.
2007/0173741 A1 7/2007 Deshmukh et al.
2007/0173761 A1 7/2007 Kanderian et al.
2007/0179349 A1 8/2007 Hoyme et al.
2007/0179352 A1 8/2007 Randlov et al.
2007/0191701 A1 8/2007 Feldman et al.
2007/0197889 A1 8/2007 Brister et al.
2007/0199818 A1 8/2007 Petyt et al.
2007/0203407 A1 8/2007 Hoss et al.
2007/0203966 A1 8/2007 Brauker et al.
2007/0208246 A1 9/2007 Brauker et al.
2007/0213611 A1 9/2007 Simpson et al.
2007/0219496 A1 9/2007 Kamen et al.
2007/0222609 A1 9/2007 Duron et al.
2007/0227911 A1 10/2007 Wang et al.
2007/0232880 A1 10/2007 Siddiqui et al.
2007/0233013 A1 10/2007 Schoenberg et al.
2007/0235331 A1 10/2007 Simpson et al.
2007/0244368 A1 10/2007 Bayloff et al.
2007/0244383 A1 10/2007 Talbot et al.
2007/0244398 A1 10/2007 Lo et al.
2007/0249922 A1 10/2007 Peyser et al.
2007/0253021 A1 11/2007 Mehta et al.
2007/0255116 A1 11/2007 Mehta et al.
2007/0255125 A1 11/2007 Moberg et al.
2007/0255302 A1 11/2007 Koeppel et al.
2007/0255348 A1 11/2007 Holtzclaw
2007/0255531 A1 11/2007 Drew
2007/0258395 A1 11/2007 Jollota et al.
2007/0270672 A1 11/2007 Hayter
2007/0282299 A1 12/2007 Hellwig
2007/0285238 A1 12/2007 Batra
2008/0004512 A1 1/2008 Funderbunk et al.
2008/0004573 A1 1/2008 Kaufmann et al.
2008/0009304 A1 1/2008 Fry
2008/0009692 A1 1/2008 Stafford
2008/0009805 A1 1/2008 Ethelfeld
2008/0017522 A1 1/2008 Heller et al.
2008/0018433 A1 1/2008 Pitt-Pladdy
2008/0021666 A1 1/2008 Goode, Jr. et al.
2008/0027474 A1 1/2008 Curry et al.
2008/0029391 A1 2/2008 Mao et al.
2008/0030369 A1 2/2008 Mann et al.
2008/0031941 A1 2/2008 Pettersson
2008/0033254 A1 2/2008 Kamath et al.
2008/0033268 A1 2/2008 Stafford
2008/0033273 A1 2/2008 Zhou et al.
2008/0033318 A1 2/2008 Mace et al.
2008/0039702 A1 2/2008 Hayter et al.
2008/0045824 A1 2/2008 Tapsak et al.
2008/0055070 A1 3/2008 Bange et al.
2008/0058625 A1 3/2008 McGarraugh et al.
2008/0059227 A1 3/2008 Clapp
2008/0060955 A1 3/2008 Goodnow
2008/0062055 A1 3/2008 Cunningham et al.
2008/0064937 A1 3/2008 McGarraugh et al.
2008/0064941 A1 3/2008 Funderbunk et al.
2008/0064943 A1 3/2008 Talbot et al.
2008/0065646 A1 3/2008 Zhang et al.
2008/0066305 A1 3/2008 Wang et al.
2008/0067627 A1 3/2008 Boeck et al.
2008/0071156 A1 3/2008 Brister et al.
2008/0071157 A1 3/2008 McGarraugh et al.
2008/0071158 A1 3/2008 McGarraugh et al.
2008/0071328 A1 3/2008 Haubrich et al.
2008/0071580 A1 3/2008 Marcus
2008/0081977 A1 4/2008 Hayter et al.
2008/0083617 A1 4/2008 Simpson et al.
2008/0086042 A1 4/2008 Brister et al.
2008/0086044 A1 4/2008 Brister et al.
2008/0086273 A1 4/2008 Shults et al.
2008/0092638 A1 4/2008 Brenneman et al.
2008/0092911 A1 4/2008 Schulman et al.
2008/0097246 A1 4/2008 Stafford
2008/0097289 A1 4/2008 Steil et al.
2008/0097908 A1 4/2008 Dicks et al.
2008/0011971 A1 5/2008 Reggiardo et al.
2008/0102441 A1 5/2008 Chen et al.
2008/0108942 A1 5/2008 Brister et al.
2008/0112848 A1 5/2008 Huffstodt et al.
2008/0114280 A1 5/2008 Stafford
2008/0119705 A1 5/2008 Patel et al.
2008/0119707 A1 5/2008 Stafford
2008/0133702 A1 6/2008 Sharma et al.
2008/0139910 A1 6/2008 Mastrototaro et al.
2008/0148873 A1 6/2008 Wang
2008/0154205 A1 6/2008 Wojcik
2008/0154513 A1 6/2008 Kovatchev et al.
2008/0161666 A1 7/2008 Feldman et al.
2008/0167543 A1 7/2008 Say et al.
2008/0167572 A1 7/2008 Stivoric et al.
2008/0167578 A1 7/2008 Bryer et al.
2008/0172205 A1 7/2008 Breton et al.
2008/0179187 A1 7/2008 Ouyang
2008/0182537 A1 7/2008 Manku et al.
2008/0183060 A1 7/2008 Steil et al.
2008/0183061 A1 7/2008 Goode, Jr. et al.
2008/0183399 A1 7/2008 Goode, Jr. et al.
2008/0188731 A1 8/2008 Brister et al.
2008/0188796 A1 8/2008 Steil et al.
2008/0189051 A1 8/2008 Goode, Jr. et al.
2008/0194926 A1 8/2008 Goh et al.
2008/0194934 A1 8/2008 Ray et al.
2008/0194935 A1 8/2008 Brister et al.
2008/0194936 A1 8/2008 Goode, Jr. et al.
2008/0194937 A1 8/2008 Goode, Jr. et al.
2008/0194938 A1 8/2008 Brister et al.
2008/0195049 A1 8/2008 Thalmann et al.
2008/0195232 A1 8/2008 Carr-Brendel et al.
2008/0195967 A1 8/2008 Goode, Jr. et al.
2008/0197024 A1 8/2008 Simpson et al.
2008/0200788 A1 8/2008 Brister et al.
2008/0200789 A1 8/2008 Brister et al.
2008/0200791 A1 8/2008 Simpson et al.
2008/0200897 A1 8/2008 Hoss et al.
2008/0208025 A1 8/2008 Shults et al.
2008/0208113 A1 8/2008 Damiano et al.
2008/0214915 A1 9/2008 Brister et al.
2008/0214918 A1 9/2008 Brister et al.
2008/0228051 A1 9/2008 Shults et al.
2008/0228054 A1 9/2008 Shults et al.
2008/0234561 A1 9/2008 Roesicke et al.
2008/0234992 A1 9/2008 Ray et al.
2008/0235469 A1 9/2008 Drew
2008/0242961 A1 10/2008 Brister et al.
2008/0242962 A1 10/2008 Roesicke et al.
2008/0252459 A1 10/2008 Butler et al.
2008/0255434 A1 10/2008 Hayter et al.
2008/0255437 A1 10/2008 Hayter
2008/0255438 A1 10/2008 Saidara et al.
2008/0255808 A1 10/2008 Hayter
2008/0256048 A1 10/2008 Hayter
2008/0262469 A1 10/2008 Brister et al.
2008/0267823 A1 10/2008 Wang et al.
2008/0269673 A1 10/2008 Butoi et al.
2008/0275313 A1 11/2008 Brister et al.
2008/0275327 A1 11/2008 Faarbaek et al.
2008/0278333 A1 11/2008 Fennell et al.
2008/0283396 A1 11/2008 Wang et al.
2008/0287755 A1 11/2008 Sass et al.
2008/0287761 A1 11/2008 Hayter
2008/0287762 A1 11/2008 Hayter
2008/0287763 A1 11/2008 Hayter
2008/0287764 A1 11/2008 Rasdal et al.
2008/0287765 A1 11/2008 Rasdal et al.

(56) **References Cited**

U.S. PATENT DOCUMENTS

2008/0287766 A1 11/2008 Rasdal et al.
2008/0288180 A1 11/2008 Hayter
2008/0288204 A1 11/2008 Hayter et al.
2008/0294024 A1 11/2008 Cosentino et al.
2008/0294096 A1 11/2008 Uber et al.
2008/0296155 A1 12/2008 Shults et al.
2008/0300476 A1 12/2008 Stafford
2008/0306368 A1 12/2008 Goode, Jr. et al.
2008/0306434 A1 12/2008 Dobbles et al.
2008/0306435 A1 12/2008 Kamath et al.
2008/0306444 A1 12/2008 Brister et al.
2008/0312518 A1 12/2008 Jina et al.
2008/0312841 A1 12/2008 Hayter
2008/0312842 A1 12/2008 Hayter
2008/0312844 A1 12/2008 Hayter et al.
2008/0312845 A1 12/2008 Hayter et al.
2008/0319295 A1 12/2008 Bernstein et al.
2008/0319296 A1 12/2008 Bernstein et al.
2008/0319414 A1 12/2008 Yodfat et al.
2009/0005659 A1 1/2009 Kollias et al.
2009/0005665 A1 1/2009 Hayter et al.
2009/0005666 A1 1/2009 Shin et al.
2009/0006034 A1 1/2009 Hayter et al.
2009/0006133 A1 1/2009 Weinert et al.
2009/0012377 A1 1/2009 Jennewine et al.
2009/0012379 A1 1/2009 Goode, Jr. et al.
2009/0018424 A1 1/2009 Kamath et al.
2009/0018425 A1 1/2009 Ouyang et al.
2009/0020502 A1 1/2009 Bhullar et al.
2009/0030294 A1 1/2009 Petisce et al.
2009/0033482 A1 2/2009 Hayter et al.
2009/0036747 A1 2/2009 Hayter et al.
2009/0036758 A1 2/2009 Brauker et al.
2009/0036760 A1 2/2009 Hayter
2009/0036763 A1 2/2009 Brauker et al.
2009/0036915 A1 2/2009 Karbowniczek et al.
2009/0043181 A1 2/2009 Brauker et al.
2009/0043182 A1 2/2009 Brauker et al.
2009/0043525 A1 2/2009 Brauker et al.
2009/0043541 A1 2/2009 Brauker et al.
2009/0043542 A1 2/2009 Brauker et al.
2009/0045055 A1 2/2009 Rhodes et al.
2009/0048503 A1 2/2009 Dalal et al.
2009/0054737 A1 2/2009 Magar et al.
2009/0054748 A1 2/2009 Feldman et al.
2009/0054866 A1 2/2009 Teisen-Simony et al.
2009/0055149 A1 2/2009 Hayter et al.
2009/0058635 A1 3/2009 LaLonde et al.
2009/0062633 A1 3/2009 Brauker et al.
2009/0062635 A1 3/2009 Brauker et al.
2009/0062767 A1 3/2009 VanAntwerp et al.
2009/0063187 A1 3/2009 Johnson et al.
2009/0063402 A1 3/2009 Hayter
2009/0069658 A1 3/2009 Say et al.
2009/0069750 A1 3/2009 Schraga
2009/0076356 A1 3/2009 Simpson et al.
2009/0076359 A1 3/2009 Peyser
2009/0076360 A1 3/2009 Brister et al.
2009/0076361 A1 3/2009 Kamath et al.
2009/0082693 A1 3/2009 Stafford
2009/0085768 A1 4/2009 Patel et al.
2009/0085873 A1 4/2009 Betts et al.
2009/0088614 A1 4/2009 Taub
2009/0088787 A1 4/2009 Koike et al.
2009/0099436 A1 4/2009 Brister et al.
2009/0102678 A1 4/2009 Mazza et al.
2009/0105554 A1 4/2009 Stahmann et al.
2009/0105560 A1 4/2009 Solomon
2009/0105569 A1 4/2009 Stafford
2009/0105636 A1 4/2009 Hayter et al.
2009/0112478 A1 4/2009 Mueller, Jr. et al.
2009/0124877 A1 5/2009 Shariati et al.
2009/0124878 A1 5/2009 Goode et al.
2009/0124879 A1 5/2009 Brister et al.
2009/0124964 A1 5/2009 Leach et al.
2009/0124979 A1 5/2009 Raymond et al.
2009/0131768 A1 5/2009 Simpson et al.
2009/0131769 A1 5/2009 Leach et al.
2009/0131776 A1 5/2009 Simpson et al.
2009/0131777 A1 5/2009 Simpson et al.
2009/0131860 A1 5/2009 Nielsen
2009/0137886 A1 5/2009 Shariati et al.
2009/0137887 A1 5/2009 Shariati et al.
2009/0143659 A1 6/2009 Li et al.
2009/0143660 A1 6/2009 Brister et al.
2009/0149728 A1 6/2009 Van Antwerp et al.
2009/0150186 A1 6/2009 Cohen et al.
2009/0150454 A1 6/2009 Gejdos et al.
2009/0156919 A1 6/2009 Brister et al.
2009/0156924 A1 6/2009 Shariati et al.
2009/0163790 A1 6/2009 Brister et al.
2009/0163791 A1 6/2009 Brister et al.
2009/0164190 A1 6/2009 Hayter
2009/0164239 A1 6/2009 Hayter et al.
2009/0164251 A1 6/2009 Hayter
2009/0171182 A1 7/2009 Stafford
2009/0178459 A1 7/2009 Li et al.
2009/0182217 A1 7/2009 Li et al.
2009/0189738 A1 7/2009 Hermle
2009/0192366 A1 7/2009 Mensinger et al.
2009/0192380 A1 7/2009 Shariah et al.
2009/0192722 A1 7/2009 Shariah et al.
2009/0192724 A1 7/2009 Brauker et al.
2009/0192745 A1 7/2009 Kamath et al.
2009/0192751 A1 7/2009 Kamath et al.
2009/0198118 A1 8/2009 Hayter et al.
2009/0198215 A1 8/2009 Chong et al.
2009/0203981 A1 8/2009 Brauker et al.
2009/0204340 A1 8/2009 Feldman et al.
2009/0204341 A1 8/2009 Brauker et al.
2009/0210249 A1 8/2009 Rasch-Menges et al.
2009/0212766 A1 8/2009 Olson et al.
2009/0216100 A1 8/2009 Ebner et al.
2009/0216103 A1 8/2009 Brister et al.
2009/0234200 A1 9/2009 Husheer
2009/0240120 A1 9/2009 Mensinger et al.
2009/0240128 A1 9/2009 Mensinger et al.
2009/0240193 A1 9/2009 Mensinger et al.
2009/0242399 A1 10/2009 Kamath et al.
2009/0242425 A1 10/2009 Kamath et al.
2009/0247855 A1 10/2009 Boock et al.
2009/0247856 A1 10/2009 Boock et al.
2009/0247931 A1 10/2009 Damgaard-Sorensen
2009/0253973 A1 10/2009 Bashan et al.
2009/0259118 A1 10/2009 Feldman et al.
2009/0267765 A1 10/2009 Greene et al.
2009/0270765 A1 10/2009 Ghesquire et al.
2009/0287073 A1 11/2009 Boock et al.
2009/0287074 A1 11/2009 Shults et al.
2009/0289796 A1 11/2009 Blumberg
2009/0292184 A1 11/2009 Funderburk et al.
2009/0292185 A1 11/2009 Funderburk et al.
2009/0294277 A1 12/2009 Thomas et al.
2009/0298182 A1 12/2009 Schulat et al.
2009/0299152 A1 12/2009 Taub et al.
2009/0299155 A1 12/2009 Yang et al.
2009/0299156 A1 12/2009 Simpson et al.
2009/0299162 A1 12/2009 Brauker et al.
2009/0299167 A1 12/2009 Seymour
2009/0299276 A1 12/2009 Brauker et al.
2010/0004597 A1 1/2010 Gryn et al.
2010/0010324 A1 1/2010 Brauker et al.
2010/0010329 A1 1/2010 Taub et al.
2010/0010331 A1 1/2010 Brauker et al.
2010/0010332 A1 1/2010 Brauker et al.
2010/0016687 A1 1/2010 Brauker et al.
2010/0016698 A1 1/2010 Rasdal et al.
2010/0022855 A1 1/2010 Brauker et al.
2010/0025238 A1 2/2010 Gottlieb et al.
2010/0030038 A1 2/2010 Brauker et al.
2010/0030053 A1 2/2010 Goode, Jr. et al.
2010/0030484 A1 2/2010 Brauker et al.
2010/0030485 A1 2/2010 Brauker et al.
2010/0036215 A1 2/2010 Goode, Jr. et al.

(56) **References Cited**

U.S. PATENT DOCUMENTS

2010/0036216 A1 2/2010 Goode, Jr. et al.
2010/0036222 A1 2/2010 Goode, Jr. et al.
2010/0036223 A1 2/2010 Goode, Jr. et al.
2010/0036225 A1 2/2010 Goode, Jr. et al.
2010/0041971 A1 2/2010 Goode, Jr. et al.
2010/0045465 A1 2/2010 Brauker et al.
2010/0049014 A1 2/2010 Funderburk et al.
2010/0049024 A1 2/2010 Saint et al.
2010/0057040 A1 3/2010 Hayter
2010/0057041 A1 3/2010 Hayter
2010/0057042 A1 3/2010 Hayter
2010/0057044 A1 3/2010 Hayter
2010/0057057 A1 3/2010 Hayter et al.
2010/0063373 A1 3/2010 Kamath et al.
2010/0069728 A1 3/2010 Funderburk et al.
2010/0076283 A1 3/2010 Simpson et al.
2010/0081905 A1 4/2010 Bommakanti et al.
2010/0081906 A1 4/2010 Hayter et al.
2010/0081908 A1 4/2010 Dobbles et al.
2010/0081910 A1 4/2010 Brister et al.
2010/0087724 A1 4/2010 Brauker et al.
2010/0096259 A1 4/2010 Zhang et al.
2010/0099970 A1 4/2010 Shults et al.
2010/0099971 A1 4/2010 Shults et al.
2010/0100113 A1 4/2010 Iio et al.
2010/0113897 A1 5/2010 Brenneman et al.
2010/0119693 A1 5/2010 Tapsak et al.
2010/0119881 A1 5/2010 Patel et al.
2010/0121169 A1 5/2010 Petisce et al.
2010/0152548 A1 6/2010 Koski
2010/0152554 A1 6/2010 Steine et al.
2010/0160757 A1 6/2010 Weinert et al.
2010/0160759 A1 6/2010 Celentano et al.
2010/0168538 A1 7/2010 Keenan et al.
2010/0168660 A1 7/2010 Galley et al.
2010/0174157 A1 7/2010 Brister et al.
2010/0174158 A1 7/2010 Kamath et al.
2010/0174163 A1 7/2010 Brister et al.
2010/0174164 A1 7/2010 Brister et al.
2010/0174165 A1 7/2010 Brister et al.
2010/0174166 A1 7/2010 Brister et al.
2010/0174167 A1 7/2010 Kamath et al.
2010/0174168 A1 7/2010 Goode et al.
2010/0179401 A1 7/2010 Rasdal et al.
2010/0179402 A1 7/2010 Goode, Jr. et al.
2010/0179404 A1 7/2010 Kamath et al.
2010/0179408 A1 7/2010 Kamath et al.
2010/0179409 A1 7/2010 Kamath et al.
2010/0185065 A1 7/2010 Goode, Jr. et al.
2010/0185069 A1 7/2010 Brister et al.
2010/0185070 A1 7/2010 Brister et al.
2010/0185071 A1 7/2010 Simpson et al.
2010/0185072 A1 7/2010 Goode, Jr. et al.
2010/0185075 A1 7/2010 Brister et al.
2010/0190435 A1 7/2010 Cook et al.
2010/0191082 A1 7/2010 Brister et al.
2010/0191087 A1 7/2010 Talbot et al.
2010/0198033 A1 8/2010 Krulevitch et al.
2010/0198034 A1 8/2010 Thomas et al.
2010/0198035 A1 8/2010 Kamath et al.
2010/0198036 A1 8/2010 Kamath et al.
2010/0198142 A1 8/2010 Sloan et al.
2010/0204557 A1 8/2010 Kiaie et al.
2010/0204653 A1 8/2010 Gryn et al.
2010/0212583 A1 8/2010 Brister et al.
2010/0213057 A1 8/2010 Feldman et al.
2010/0213080 A1 8/2010 Celentano et al.
2010/0214104 A1 8/2010 Goode, Jr. et al.
2010/0217105 A1 8/2010 Yodfat et al.
2010/0217557 A1 8/2010 Kamath et al.
2010/0223013 A1 9/2010 Kamath et al.
2010/0223022 A1 9/2010 Kamath et al.
2010/0223023 A1 9/2010 Kamath et al.
2010/0228109 A1 9/2010 Kamath et al.
2010/0228111 A1 9/2010 Friman et al.
2010/0228497 A1 9/2010 Kamath et al.
2010/0230285 A1 9/2010 Hoss et al.
2010/0235439 A1 9/2010 Goodnow et al.
2010/0240975 A1 9/2010 Goode, Jr. et al.
2010/0240976 A1 9/2010 Goode, Jr. et al.
2010/0259543 A1 10/2010 Tarassenko et al.
2010/0261987 A1 10/2010 Kamath et al.
2010/0262201 A1 10/2010 He et al.
2010/0267161 A1 10/2010 Wu et al.
2010/0274107 A1 10/2010 Boock et al.
2010/0280341 A1 11/2010 Boock et al.
2010/0286496 A1 11/2010 Simpson et al.
2010/0298684 A1 11/2010 Leach et al.
2010/0312176 A1 12/2010 Lauer et al.
2010/0313105 A1 12/2010 Nekoomaram et al.
2010/0317952 A1 12/2010 Budiman et al.
2010/0324392 A1 12/2010 Yee et al.
2010/0324403 A1 12/2010 Brister et al.
2010/0325868 A1 12/2010 Wang et al.
2010/0326842 A1 12/2010 Mazza et al.
2010/0331642 A1 12/2010 Bruce et al.
2010/0331644 A1 12/2010 Neale et al.
2010/0331648 A1 12/2010 Kamath et al.
2010/0331651 A1 12/2010 Groll
2010/0331653 A1 12/2010 Stafford
2010/0331656 A1 12/2010 Mensinger et al.
2010/0331657 A1 12/2010 Mensinger et al.
2011/0004085 A1 1/2011 Mensinger et al.
2011/0004276 A1 1/2011 Blair et al.
2011/0009727 A1 1/2011 Mensinger et al.
2011/0015509 A1 1/2011 Peyser
2011/0021889 A1 1/2011 Hoss et al.
2011/0022411 A1 1/2011 Hjelm et al.
2011/0024043 A1 2/2011 Boock et al.
2011/0024307 A1 2/2011 Simpson et al.
2011/0027127 A1 2/2011 Simpson et al.
2011/0027453 A1 2/2011 Boock et al.
2011/0027458 A1 2/2011 Boock et al.
2011/0028815 A1 2/2011 Simpson et al.
2011/0028816 A1 2/2011 Simpson et al.
2011/0040256 A1 2/2011 Bobroff et al.
2011/0040263 A1 2/2011 Hordum et al.
2011/0046467 A1 2/2011 Simpson et al.
2011/0054275 A1 3/2011 Stafford
2011/0060196 A1 3/2011 Stafford
2011/0073475 A1 3/2011 Kastanos et al.
2011/0077469 A1 3/2011 Blocker et al.
2011/0077490 A1 3/2011 Simpson et al.
2011/0082484 A1 4/2011 Saravia et al.
2011/0097090 A1 4/2011 Cao
2011/0106126 A1 5/2011 Love et al.
2011/0118579 A1 5/2011 Goode et al.
2011/0118580 A1 5/2011 Goode et al.
2011/0123971 A1 5/2011 Berkowitz et al.
2011/0124992 A1 5/2011 Brauker et al.
2011/0124997 A1 5/2011 Goode et al.
2011/0125040 A1 5/2011 Crawford et al.
2011/0125410 A1 5/2011 Goode et al.
2011/0130970 A1 6/2011 Goode et al.
2011/0130971 A1 6/2011 Goode et al.
2011/0130998 A1 6/2011 Goode et al.
2011/0137257 A1 6/2011 Gyrn et al.
2011/0137571 A1 6/2011 Power et al.
2011/0144465 A1 6/2011 Shults et al.
2011/0148905 A1 6/2011 Simmons et al.
2011/0152637 A1 6/2011 Kateraas et al.
2011/0178378 A1 7/2011 Brister et al.
2011/0178461 A1 7/2011 Chong et al.
2011/0184258 A1 7/2011 Stafford
2011/0184482 A1 7/2011 Eberman et al.
2011/0184752 A1 7/2011 Ray et al.
2011/0190603 A1 8/2011 Stafford
2011/0190614 A1 8/2011 Brister et al.
2011/0191044 A1 8/2011 Stafford
2011/0193704 A1 8/2011 Harper et al.
2011/0201910 A1 8/2011 Rasdal et al.
2011/0201911 A1 8/2011 Johnson et al.
2011/0208027 A1 8/2011 Wagner et al.
2011/0213225 A1 9/2011 Bernstein et al.

(56) **References Cited**

U.S. PATENT DOCUMENTS

2011/0218414	A1	9/2011	Kamath et al.
2011/0230741	A1	9/2011	Liang et al.
2011/0231107	A1	9/2011	Brauker et al.
2011/0231140	A1	9/2011	Goode, Jr. et al.
2011/0231141	A1	9/2011	Goode, Jr. et al.
2011/0231142	A1	9/2011	Goode, Jr. et al.
2011/0253533	A1	10/2011	Shults et al.
2011/0257495	A1	10/2011	Hoss et al.
2011/0257895	A1	10/2011	Brauker et al.
2011/0263958	A1	10/2011	Brauker et al.
2011/0263959	A1	10/2011	Young et al.
2011/0264378	A1	10/2011	Breton et al.
2011/0270062	A1	11/2011	Goode, Jr. et al.
2011/0270158	A1	11/2011	Brauker et al.
2011/0275919	A1	11/2011	Petisce et al.
2011/0287528	A1	11/2011	Fern et al.
2011/0288574	A1	11/2011	Curry et al.
2011/0290645	A1	12/2011	Brister et al.
2011/0313543	A1	12/2011	Brauker et al.
2011/0319729	A1	12/2011	Donnay et al.
2011/0319733	A1	12/2011	Stafford
2011/0319738	A1	12/2011	Woodruff et al.
2011/0319739	A1	12/2011	Kamath et al.
2011/0320130	A1	12/2011	Valdes et al.
2012/0010642	A1	1/2012	Lee et al.
2012/0035445	A1	2/2012	Boock et al.
2012/0040101	A1	2/2012	Tapsak et al.
2012/0046534	A1	2/2012	Simpson et al.
2012/0078071	A1	3/2012	Bohm et al.
2012/0108934	A1	5/2012	Valdes et al.
2012/0108983	A1	5/2012	Banet et al.
2012/0143135	A1	6/2012	Cole et al.
2013/0111248	A1	5/2013	Ghesquiere et al.
2013/0150691	A1	6/2013	Pace et al.
2015/0326072	A1	11/2015	Petras et al.

FOREIGN PATENT DOCUMENTS

CA	2468577	6/2003
CA	2495648	2/2004
CA	2143172	7/2005
CA	2498682	9/2005
CA	2555749	9/2005
CA	2632709	6/2007
CA	2396613	3/2008
CA	2678336	5/2008
CA	2615575	6/2008
CA	2626349	9/2008
CA	2701374	4/2009
CA	2413148	8/2010
CA	2728831	7/2011
CA	2617965	10/2011
CN	101163440	4/2008
CN	101268932	9/2008
CN	101296650	10/2008
DE	4401400	7/1995
EP	0098592	1/1984
EP	0127958	12/1984
EP	0320109	6/1989
EP	0353328	2/1990
EP	0390390	10/1990
EP	0396788	11/1990
EP	0286118	1/1995
EP	0680727	11/1995
EP	0724859	8/1996
EP	0805574	11/1997
EP	0973289	1/2000
EP	0678308	5/2000
EP	1048264	11/2000
EP	1177802	2/2002
EP	1292218	3/2003
EP	1077634	7/2003
EP	1568309	8/2005
EP	1666091	6/2006
EP	1703697	9/2006
EP	1704893	9/2006
EP	0987982	1/2007
EP	1956371	8/2008
EP	2031534	3/2009
EP	2060284	5/2009
EP	1897487	11/2009
EP	1897492	11/2009
EP	2113864	11/2009
EP	1897488	12/2009
EP	1681992	4/2010
EP	2201969	6/2010
EP	1448489	8/2010
EP	1971396	8/2010
EP	1725163	12/2010
EP	2260757	12/2010
EP	1413245	6/2011
EP	2327362	6/2011
EP	2327984	6/2011
EP	2335587	6/2011
EP	2153382	2/2012
EP	2284773	2/2012
GB	2 067 764 B	1/1984
GB	2409951	7/2005
JP	03-500940	2/1991
JP	07-182462	7/1995
JP	07-311196	11/1995
JP	10-305016	11/1998
JP	11-506629	6/1999
JP	11-225359	8/1999
JP	2003-144417	5/2003
JP	2004-214014 A	7/2004
JP	2004-520103	7/2004
JP	2004-520898	7/2004
JP	2006-021031	1/2006
JP	2006-280464	10/2006
JP	2007-152037	6/2007
WO	WO-1991/015993	10/1991
WO	WO-1992/013271	8/1992
WO	WO-1994/020602	9/1994
WO	WO-95/28878	2/1995
WO	WO-1996/039977	5/1996
WO	WO-1996/025089	8/1996
WO	WO-96/35370	11/1996
WO	WO-97/33513	9/1997
WO	WO-98/04902	2/1998
WO	WO-1998/035053	8/1998
WO	WO-1998/056293	12/1998
WO	WO-99/27849	6/1999
WO	WO-99/28736	6/1999
WO	WO-1999/033504	7/1999
WO	WO-1999/056613	11/1999
WO	WO-2000/049940	8/2000
WO	WO-00-60350	10/2000
WO	WO-2000/059370	10/2000
WO	WO-00/74753	12/2000
WO	WO-2000/078992	12/2000
WO	WO-2001/052935	7/2001
WO	WO 01/58348 A2	8/2001
WO	WO-2001/054753	8/2001
WO	WO 02/15778 A1	2/2002
WO	WO-2002/016905	2/2002
WO	WO-2002/050534	6/2002
WO	WO-2002/058537	8/2002
WO	WO 03/026728 A2	4/2003
WO	WO-2003/028784	4/2003
WO	WO 03/056319 A2	7/2003
WO	WO-03/057027	7/2003
WO	WO-2003/076893	9/2003
WO	WO-03/085372	10/2003
WO	WO-2003/082091	10/2003
WO	WO-2004/015539	2/2004
WO	WO-2004/028337	4/2004
WO	WO-2004/047445	6/2004
WO	WO 2004/049237 A2	6/2004
WO	WO-2004/060436	7/2004
WO	WO-2004/061420	7/2004
WO	WO-2004/090503	10/2004
WO	WO-2004/098405	11/2004
WO	WO 2004/098683 A1	11/2004

(56) **References Cited**

FOREIGN PATENT DOCUMENTS

WO	WO-2004/098684		11/2004
WO	WO-2004/112602		12/2004
WO	WO 2005/018450	A2	3/2005
WO	WO-2005/041766		5/2005
WO	WO-2005/045744		5/2005
WO	WO 2005/046780	A1	5/2005
WO	WO-2005/051170		6/2005
WO	WO-2005/057175		6/2005
WO	WO-2005/065538		7/2005
WO	WO-2005/084534		9/2005
WO	WO-2005/089103		9/2005
WO	WO 2005/123186	A1	12/2005
WO	WO-2006/017358		2/2006
WO	WO-2006/020212		2/2006
WO	WO-2006/024671		3/2006
WO	WO-2006/026741		3/2006
WO	WO-2006/032653		3/2006
WO	WO 2006/040083	A1	4/2006
WO	WO-2006/042811		4/2006
WO	WO-2006/064397		6/2006
WO	WO-2006/072035		7/2006
WO	WO-2006/079114		7/2006
WO	WO 2006/086423	A2	8/2006
WO	WO 2006/094513	A2	9/2006
WO	WO-2006/108809		10/2006
WO	WO 2006/114297	A1	11/2006
WO	WO-2006/118947		11/2006
WO	WO 2006/121921	A2	11/2006
WO	WO-2006/124099		11/2006
WO	WO-2007/007459		1/2007
WO	WO-2007/016399		2/2007
WO	WO-2007/019289		2/2007
WO	WO-2007/027788		3/2007
WO	WO-2007/041069		4/2007
WO	WO-2007/041070		4/2007
WO	WO-2007/041248		4/2007
WO	WO-2007/056638		5/2007
WO	WO-2007/065285		6/2007
WO	WO-2007/089738		8/2007
WO	WO-2007/092618		8/2007
WO	WO 2007/097754	A1	8/2007
WO	WO-2007/101223		9/2007
WO	WO-2007/120363		10/2007
WO	WO-2007/126444		11/2007
WO	WO-2007/053832		12/2007
WO	WO-2007/143225		12/2007
WO	WO-2007/149319		12/2007
WO	WO-20071140783		12/2007
WO	WO-2008/001366		1/2008
WO	WO 2008/014792	A1	2/2008
WO	WO-2008/021913		2/2008
WO	WO-2008/042760		4/2008
WO	WO-2008/048452		4/2008
WO	WO-2008/052374		5/2008
WO	WO-2008/062099		5/2008
WO	WO 2008/065646		6/2008
WO	WO-2008/086541		7/2008
WO	WO 2008/115409	A1	9/2008
WO	WO-2008/128210		10/2008
WO	WO 2008/129532	A2	10/2008
WO	WO-2008/130896		10/2008
WO	WO-2008/130897		10/2008
WO	WO-2008/130898		10/2008
WO	WO 2008/133702		11/2008
WO	WO 2008/138006	A2	11/2008
WO	WO-2008/143943		11/2008
WO	WO-2008/144445		11/2008
WO	WO-2008/153693		12/2008
WO	WO 2008/155377		12/2008
WO	WO 2008/157821	A1	12/2008
WO	WO-2009/018058		2/2009
WO	WO-2009/035773		3/2009
WO	WO-2009/062675		5/2009
WO	WO-2009/086216		7/2009
WO	WO-2009/096992		8/2009
WO	WO-2009/097594		8/2009
WO	WO-2010/062898		6/2010
WO	WO-2010/077329		7/2010
WO	WO 2010/112521		10/2010
WO	WO-2011/000528		1/2011
WO	WO-20111002815		1/2011
WO	WO-2011/022418		2/2011
WO	WO-2011/104616		9/2011
WO	WO-2005/121785		12/2015

OTHER PUBLICATIONS

Blank, T. B., et al., "Clinical Results From a Non-Invasive Blood Glucose Monitor", Optical Diagnostics and Sensing of Biological Fluids and Glucose and Cholesterol Monitoring II, Proceedings of SPIE, vol. 4624, 2002, pp. 1-10.

Brooks, S. L., et al., "Development of an On-Line Glucose Sensor for Fermentation Monitoring", Biosensors, vol. 3, 1987/88, pp. 45-56.

Diem, P., et al., "Clinical Performance of a Continuous Viscometric Affinity Sensor for Glucose", Diabetes Technology & Therapeutics, vol. 6, 2004, pp. 790-799.

El-Khatib, F. H, et al., "Adaptive Closed-Loop Control Provides Blood-Glucose Regulation Using Subcutaneous Insulin and Glucagon Infusion in Diabetic Swine", Journal of Diabetes Science and Technology, vol. 1, No. 2, 2007, pp. 181-192.

Garg, S., et al., "Improvement in Glycemic Excursions with a Transcutaneous, Real-Time Continuous Glucose Sensor", Diabetes Care, vol. 29, No. 1, 2006, pp. 44-50.

Kaplan, S. M., "Wiley Electrical and Electronics Engineering Dictionary", IEEE Press, 2004, pp. 141, 142, 548, 549.

Kondepati, V., et al., "Recent Progress in Analytical Instrumentation for Glycemic Control in Diabetic and Critically Ill Patients", Analytical Bioanalytical Chemistry, vol. 388, 2007, pp. 545-563.

Lo, B., et al., "Key Technical Challenges and Current Implementations of Body Sensor Networks", Body Sensor Networks, 2005, pp. 1-5.

Lodwig, V., et al., "Continuous Glucose Monitoring with Glucose Sensors: Calibration and Assessment Criteria", Diabetes Technology & Therapeutics, vol. 5, No. 4, 2003, pp. 573-587.

Lortz, J., et al., "What is Bluetooth? We Explain The Newest Short-Range Connectivity Technology", Smart Computing Learning Series, Wireless Computing, vol. 8, Issue 5, 2002, pp. 72-74.

Malin, S. F., et al., "Noninvasive Prediction of Glucose by Near-Infrared Diffuse Reflectance Spectoscopy", Clinical Chemistry, vol. 45, No. 9, 1999, pp. 1651-1658.

McGarraugh, G., et al., "Glucose Measurements Using Blood Extracted from the Forearm and the Finger", TheraSense, Inc., 2001, 16 Pages.

McGarraugh, G., et al., "Physiological Influences on Off-Finger Glucose Testing", Diabetes Technology & Therapeutics, vol. 3, No. 3, 2001, pp. 367-376.

McKean, B. D., et al., "A Telemetry-Instrumentation System for Chronically Implanted Glucose and Oxygen Sensors", IEEE Transactions on Biomedical Engineering, vol. 35, No. 7, 1988, pp. 526-532.

Rodriguez, N., et al., "Flexible Communication and Control Protocol for Injectable Neuromuscular Interfaces", IEEE Transactions on Biomedical Circuits and Systems, IEEE, vol. 1, No. 1, 2007, pp. 19-27.

Roe, J. N., et al., "Bloodless Glucose Measurements", Critical Review in Therapeutic Drug Carrier Systems, vol. 15, Issue 3, 1998, pp. 199-241.

Salditt, P., "Trends in Medical Device Design and Manufacturing", SMTA News and Journal of Surface Mount Technology, vol. 17, 2004, pp. 19-24.

Sternberg, R., et al., "Study and Development of Multilayer Needle-Type Enzyme-Based Glucose Microsensors", Biosensors, vol. 4, 1988, pp. 27-40.

Tung, S., "Layers of Security for Active RFID Tags", RFID Handbook: Applications, Technology, Security, and Privacy, Edited by Ehson, et al., Chapter 33, 2008, pp. 1-28.

(56) **References Cited**

OTHER PUBLICATIONS

Australian Patent Application No. 2008265541, Examiner's Report dated Nov. 29, 2013.
Australian Patent Application No. 2008265541, Examiner's Report dated Oct. 15, 2012.
Australian Patent Application No. 2016201703, Examiner's Report dated Mar. 22, 2017.
Australian Patent Application No. 2017254903, Examiner's Report dated Dec. 11, 2018.
Australian Patent Application No. 2018200899, Examiner's Report dated Dec. 6, 2018.
Canadian Patent Application No. 2,765,712, Examiner's Report dated Apr. 10, 2017.
Canadian Patent Application No. 2,765,712, Examiner's Report dated Mar. 27, 2018.
Chinese Patent Application No. 201080006480.2, Original Language & English Translation of Office Action dated Dec. 11, 2013.
Chinese Patent Application No. 201080006480.2, Original Language & English Translation of Office Action dated May 6, 2013.
Chinese Patent Application No. 201080027344.1, Original Language & English Translation of Office Action dated Feb. 6, 2015.
Chinese Patent Application No. 201080027344.1, Original Language & English Translation of Office Action dated Jun. 5, 2014.
Chinese Patent Application No. 20160144860.1, Original Language & English Translation of Office Action dated Mar. 23, 2018.
Chinese Patent Application No. 20160144860.1, Original Language & English Translation of Office Action dated Dec. 10, 2018.
Chinese Patent Application No. 20160144860.1, Original Language & English Translation of Office Action dated May 23, 2019.
European Patent Application No. 13000105.0, Examination Report dated Oct. 18, 2016.
European Patent Application No. 13000105.0, Minutes of the Oral Proceedings mailed Oct. 18, 2016.
European Patent Application No. 10739031.2, Extended European Search Report dated May 7, 2013.
European Patent Application No. 10739031.2, Examination Report dated Oct. 28, 2016.
European Patent Application No. 10739031.2, Opposition filed Dec. 20, 2018.
European Patent Application No. 10812438.9, Extended European Search Report dated Dec. 10, 2013.
European Patent Application No. 13000105.0, Opposition filed Jan. 4, 2019.
European Patent Application No. 15184320.8, Examination Report dated Apr. 18, 2017.
European Patent Application No. 17201183.5, Examination Report dated May 17, 2019.
European Patent Application No. 18192278.2, Extended European Search Report dated Mar. 13, 2019.
European Patent Application No. 18208224.8, Extended European Search Report dated Oct. 11, 2019.
Japanese Patent Application No. 2012-526736, Original Language & English Translation of Office Action dated Apr. 15, 2014.
Japanese Patent Application No. 2012-526736, Original Language & English Translation of Office Action dated Dec. 16, 2014.
Japanese Patent Application No. 2015-159805, Original Language & English Translation of Office Action dated Aug. 9, 2016.
PCT Application No. PCT/US2010/002401, International Preliminary Report on Patentability and Written Opinion of the International Searching Authority dated Mar. 15, 2012.
PCT Application No. PCT/US2010/002401, International Search Report and Written Opinion of the International Searching Authority dated Nov. 12, 2010.
PCT Application No. PCT/US2010/022928, International Preliminary Report on Patentability and Written Opinion of the International Searching Authority dated Aug. 18, 2011.
PCT Application No. PCT/US2010/022928, International Search Report and Written Opinion of the International Searching Authority dated Mar. 21, 2010.
U.S. Appl. No. 12/698,124, Office Action dated Aug. 12, 2012.
U.S. Appl. No. 12/698,124, Office Action dated Dec. 4, 2013.
U.S. Appl. No. 12/698,124, Office Action dated Jun. 6, 2013.
U.S. Appl. No. 12/698,124, Office Action dated Mar. 20, 2015.
U.S. Appl. No. 12/698,124, Office Action dated Nov. 21, 2012.
U.S. Appl. No. 12/807,278, Advisory Action dated Jul. 28, 2014.
U.S. Appl. No. 12/807,278, Advisory Action dated Jun. 13, 2013.
U.S. Appl. No. 12/807,278, Advisory Action dated Oct. 8, 2014.
U.S. Appl. No. 12/807,278, Office Action dated Aug. 21, 2012.
U.S. Appl. No. 12/807,278, Office Action dated Feb. 1, 2013.
U.S. Appl. No. 12/807,278, Office Action dated Mar. 29, 2013.
U.S. Appl. No. 12/807,278, Office Action dated Mar. 5, 2015.
U.S. Appl. No. 12/807,278, Office Action dated Jul. 5, 2016.
U.S. Appl. No. 12/807,278, Office Action dated Apr. 3, 2017.
U.S. Appl. No. 12/807,278, Office Action dated Feb. 1, 2018.
U.S. Appl. No. 12/807,278, Notice of Allowance dated Jul. 5, 2018.
U.S. Appl. No. 14/094,719, Office Action dated Dec. 26, 2018.
U.S. Appl. No. 14/094,719, Office Action dated Jul. 10, 2019.
U.S. Appl. No. 14/741,459, Office Action dated Jun. 5, 2017.
U.S. Appl. No. 14/741,459, Office Action dated Dec. 14, 2017.
U.S. Appl. No. 14/741,459, Advisory Action dated Apr. 13, 2018.
U.S. Appl. No. 14/741,459, Office Action dated Aug. 2, 2019.
U.S. Appl. No. 14/741,459, Office Action dated Jan. 7, 2020.
U.S. Appl. No. 14/841,122, Office Action dated Aug. 25, 2016.
U.S. Appl. No. 14/841,122, Office Action dated Mar. 7, 2017.
U.S. Appl. No. 14/841,122, Office Action dated Feb. 8, 2018.
U.S. Appl. No. 14/841,122, Office Action dated Sep. 18, 2018.
U.S. Appl. No. 14/841,122, Office Action dated May 1, 2019.
U.S. Appl. No. 14/841,224, Office Action dated Nov. 3, 2016.
U.S. Appl. No. 14/841,224, Office Action dated Jan. 17, 2017.
U.S. Appl. No. 14/841,224, Advisory Action dated Jun. 2, 2017.
U.S. Appl. No. 14/841,224, Office Action dated Jul. 31, 2017.
U.S. Appl. No. 14/841,224, Office Action dated Feb. 8, 2018.
U.S. Appl. No. 14/841,224, Office Action dated Apr. 17, 2018.
U.S. Appl. No. 14/841,224, Office Action dated Sep. 26, 2018.
U.S. Appl. No. 14/841,224, Advisory Action dated Jan. 28, 2019.
U.S. Appl. No. 14/841,224, Office Action dated Feb. 19, 2019.
U.S. Appl. No. 14/841,224, Notice of Allowance dated Jul. 25, 2019.
U.S. Appl. No. 14/841,429, Office Action dated Oct. 27, 2016.
U.S. Appl. No. 14/841,429, Office Action dated Feb. 8, 2017.
U.S. Appl. No. 14/841,429, Office Action dated Feb. 8, 2018.
U.S. Appl. No. 14/841,429, Advisory Action dated May 2, 2018.
U.S. Appl. No. 14/841,429, Office Action dated Sep. 21, 2018.
U.S. Appl. No. 14/841,429, Office Action dated Jun. 12, 2019.
U.S. Appl. No. 15/985,615, Office Action dated Jul. 27, 2018.
U.S. Appl. No. 15/985,615, Office Action dated Mar. 7, 2019.
Ambade, V. N., et al., "Methods for Estimation of Blood Glucose: A Comparative Evaluation", Medical Journal Armed Forces India, 1998, vol. 54, No. 2, pp. 131-133.
ASTM International, Designation D2240-05, 2010, pp. 1-13.
Biosensors: Fundamentals and Applications, Turner et al., Eds., 1987, pp. 1-786.
Bluetooth Core Specification 4.0, Jun. 30, 2010, Master Table of Contents & Compliance Requirements, pp. 1-89.
Clarke, W., et al., "Statistical Tools to Analyze Continuous Glucose Monitor Data", Diabetes Technology & Therapeutics, 2009, vol. 11, Suppl. 1, pp. S-45-S-54.
In Vivo Glucose Sensing, Cunningham et al., Eds., 2010, Chemical Analysis, vol. 174, pp. 1-466.
Decuir, J., "Bluetooth 4.0: Low Energy", IEEE SCV Consultants' Network of Silicon Valley, 2012, pp. 1-68.
Dementyev, A., et al., "Power Consumption Analysis of Bluetooth Low Energy, ZigBee and ANT Sensor Nodes in a Cyclic Sleep Scenario", IEEE International Wireless Symposium (IWS), 2013, Beijing, China, pp. 1-4.
DexCom™ STS™ Continuous Glucose Monitoring System User's Guide, 2006, pp. 1-57.
Dexcom STS®-7 Continuous Glucose Monitoring System User's Guide, 2007, pp. 1-74.
ECMA International Standard ECMA-340, Near Field Communication Interface and Protocol (NFCIP-1), 2nd Edition, 2004, pp. 1-65.

(56) **References Cited**

OTHER PUBLICATIONS

Facchinetti, A., et al., "A New Index to Optimally Design and Compare Continuous Glucose Monitoring Glucose Prediction Algorithms", Diabetes Technology & Therapeutics, 2011, vol. 13, No. 2, pp. 111-119.
Fujipoly Silver ZEBRA® Connector Data Sheet FSDS 01-34, Version 5, 2006, pp. 1-7.
Gilligan, B. J., et al., "Evaluation of a Subcutaneous Glucose Sensor out to 3 Months in a Dog Model", Diabetes Care, 1994, vol. 17, No. 8, pp. 882-887.
Guerra, S., et al., "A Dynamic Risk Measure from Continuous Glucose Monitoring Data", Diabetes Technology & Therapeutics, 2011, vol. 13, No. 8, pp. 843-852.
Heise, T., et al., "Hypoglycemia Warning Signal and Glucose Sensors: Requirements and Concepts", Diabetes Technology & Therapeutics, 2003, vol. 5, No. 4, pp. 563-571.
Heller, A., "Implanted Electrochemical Glucose Sensors for the Management of Diabetes", Annnu. Rev. Biomed. Eng., 1999, vol. 1, pp. 153-175.
"In Vitro Diagnostic Products for Human Use", Federal Register, 1974, vol. 39, No. 126, pp. 24136-24147.
Klonoff, D. C., "A Review of Continuous Glucose Monitoring Technology", Diabetes Technology & Therapeutics, 2005, vol. 7, No. 5, pp. 770-775.
León, L. P., et al., "Continuous-Flow Analysis for Glucose in Serum, with Use of Hexokinase and Glucose-6-Phosphate Dehydrogenase Co-Immobilized in Tubular Form", Clinical Chemistry, 1980, vol. 26, No. 1, pp. 123-129.
Morak, J., et al., "Design and Evaluation of a Telemonitoring Concept Based on NFC-Enabled Mobile Phones and Sensor Devices", IEEE Transactions on Information Technology in Biomedicine, 2012, vol. 16, No. 1, pp. 17-23.
Movassaghi, S., et al., "Wireless Technologies for Body Area Networks: Characteristics and Challenges", 2012 International Symposium on Communications and Information Technologies (ISCIT), 2012, Gold Coast, QLD, Australia, pp. 42-47.
Passey, R. B., et al., "Evaluation and Comparison of 10 Glucose Methods and the Reference Method Recommendation in the Proposed Product Class Standard (1974)", Clinical Chemistry, 1977, vol. 23, No. 1, pp. 131-139.
Sandham, W., et al., "Blood Glucose Prediction for Diabetes Therapy Using a Recurrent Artificial Neural Network", 9th European Signal Processing Conference, 1998, Rhodes, Greece, pp. 1-4.
Sparacino, G., et al., "Glucose Concentration Can Be Predicted Ahead in Time from Continuous Glucose Monitoring Sensor Time-Series", IEEE Transactions on Biomedical Engineering, 2007, vol. 54, No. 5, pp. 931-937.
Townsend, K., et al., "Getting Started with Bluetooth Low Energy—Chapter 1", 2014, pp. 1-26.
U.S. Appl. No. 60/587,787, filed Jul. 13, 2004, pp. 1-69.
U.S. Appl. No. 60/606,334, filed Aug. 31, 2004, pp. 1-38.
Wang, X.H., et al., "Bluetooth: Opening a blue sky for healthcare", Mobile Information Systems, 2006, vol. 2, pp. 151-167.
Z-Carbon Connector, retrieved from http://www.zaxisconnector.com/SS_zc.shtml, 2004, 2 pages.
Z-Silver Connector, retrieved from http://www.zaxisconnector.com/SS_zs.shtml, 2004, 2 pages.
Alcock & Turner, "Continuous analyte monitoring to aid clinical practice," IEEE Engineering in Medicine & BioloXY Magazine, 13:319-25 (1994).
Armour et al., "Application of Chronic Intravascular Blood Glucose Sensor in Dogs," Diabetes, vol. 39, pp. 1519-1526, Dec. 1990.
Bindra, D.S. et al., "Design and in Vitro Studies of a Needle-Type Glucose Sensor for Subcutaneous Monitoring," Anal. Chem., 63(17):1692-1696 (Sep. 1, 1991).
Bobbioni-Harsch, E. et al., "Lifespan of subcutaneous glucose sensors and their performances during dynamic glycaemia changes in rats," J. Biomed. Eng. 15:457-463 (1993).
Cass, A.E.G. et al., "Ferrocene-Mediated Enzyme Electrode for Amperometric Determination of Glucose," Anal. Chem., 56(4):667-671 (Apr. 1984).
Gregg, B. A. et al., "Cross-Linked Redox Gels Containing Glucose Oxidase for Amperometric Biosensor Applications,"Analytical Chemistry, 62(3):258-263 (Feb. 1, 1990).
Harrison, DJ. et al., "Characterization of Perfluorosulfonic Acid Polymer Coated Enzyme Electrodes and a Miniaturized Integrated Potentiostat for Glucose Analysis in Whole Blood," Anal. Chem., 60 (19):2002-2007 (Oct. 1, 1988).
Heller, A., "Electrical Connection of Enzyme Redox Centers to Electrodes," J. Phys. Chern., 96 (9):3579-3587 (1992).
Heller, A., "Electrical Wiring of Redox Enzymes," Acc. Chem. Res., 23(5):129-134 (1990).
International Search Report and Written Opinion from PCT/US2010/022860 dated Mar. 23, 2010.
International Search Report and Written Opinion from PCT/US2010/047381 dated Oct. 15, 2010.
International Search Report and Written Opinion from PCT/US2010/050772 dated Dec. 3, 2010.
International Search Report and Written Opinion from PCT/US2010/050888 dated Nov. 29, 2010.
International Search Report and Written Opinion from PCT/US2010/051861 dated Nov. 30, 2010.
Johnson, K., et al., "In vivo evaluation of an electroenzymatic glucose sensor implanted in subcutaneous tissue," Biosensors and Bioelectronics. 1992, vol. 7, pp. 709-714.
Maidan, R. et al., "Elimination of Electroaxidizable Interferant-Produced Currents in Amperometric Biosensors," Analytical Chemistry, 64(23):2889-2896 (Dec. 1, 1992).
Mastrototaro, J.J., et al., "An Electroenzymatic Glucose Sensor Fabricated on a Flexible Substrate," Sensors and Biosensors B Chemical, B5: 139-144 (1991).
McKean, B., et al., "A Telemetry-Instrumentation System for Chronically Implanted Glucose and Oxygen Sensors," IEEE Transactions on Biomedical Engineering, vol. 35, No. 7, (Jul. 1988), pp. 526-532.
Moatti-Sirat, D., et al., "Towards continuous glucose monitoring: in vivo evaluation of a miniaturized glucose sensor implanted for several days in rat subcutaneous tissue," Diabetolocia, 35(3) (1 page—Abstract only) (Mar. 1992).
Ohara, T. J., et al., "Glucose Electrodes Based on Cross-Linked $[Os(bpy)_2Cl]^{+/2+}$ Complexed Poly(1-vinylimadazole) Films," Analytical Chemistry, 65(23):3512-3516 (Dec. 1, 1993).
Opinion of the Court, Supreme Court of the United States, No. 04-1350, *KSR International co., Petitioner* v. *Teleflex Inc. et al.*, Apr. 30, 2007.
Pickup, J. C., et al., "In vivo molecular sensing in diabetes mellitus: an implantable glucose sensor with direct electron transfer," Diabetologia, 32(3):213-217 (1989).
Pishko, M. V., et al., "Amperometric Glucose Microelectrodes Prepared Through Immobilization of Glucose Oxidase in Redox Hydrogels," Anal. Chem., 63(20):2268-2272 (Oct. 15, 1991).
Poitout, V., et al., "In vitro and in vivo evaluation in dogs of a miniaturized glucose sensor," ASAIO Transactions, 37(3) (1 page—Abstract only) (Jul.-Sep. 1991).
Reach, G., et al., "Can Continuous Glucose Monitoring Be Used for the Treatment of Diabetes?," Analytical Chemistry, 64(6):381-386 (Mar. 15, 1992).
Rebrin, K., et al., "Automated Feedback Control of Subcutaneous Glucose Concentration in Diabetic Dogs," Diabetologia, 32(8):573-576 (Aug. 1989).
Sakakida, M., et al., "Ferrocene-mediate needle-type glucose sensor covered with newly designed biocompatible membrane," Sensors and Actuators B, 13-14:319-322 (1993).
Sakakida, M., et al., "Development of ferrocene-mediated needle-type glucose sensor as a measure of true subcutaneous tissue glucose concentrations", Artif Organs Today. 1992, vol. 2, No. 2, pp. 145-458.
Shichiri, M., et al., "Glycaemic Control in Pancrearetomized Dogs with a Wearable Artificial Endocrine Pancreas," Diabetologia, 24(3):179-184 (Mar. 1983).

(56) **References Cited**

OTHER PUBLICATIONS

Shichiri, M., et al., "Telemetry Glucose Monitoring Device with Needle-type Glucose Sensor: A Useful Tool for Blood Glucose Monitoring in Diabetic Individuals," Diabetes Care, vol. 9, No. 3 (May-Jun. 1986), pp. 298-301.
Shichiri, M., et al., "In vivo characteristics of needle-type glucose sensor—Measurement of subcutaneous glucose concentrations in human volunteers," Horm Metab Res Suppl. 1988, vol. 20, pp. 17-20.
Shichiri, M., et al., "Wearable artificial endocrine pancreas with needle-type glucose sensor," The Lancet, 1982, vol. 2, No. 8308, pp. 1129-1131.
Shults, M., "A Telemetry-Instrumentation System for Monitoring Multiple Subcutaneously Implanted Glucose Sensors," IEEE Transactions on Biomedical Engineering, vol. 41, No. 10 (Oct. 1994), pp. 937-942.
Sternberg, R., et al., "Study and Development of Multilayer Needle-type Enzyme-based Glucose Microsensors," Biosensors, 4:27-40 (1988).
Turner, A.P.F., et al., "Diabetes Mellitus: Biosensors for Research and Management", Biosensors, 1:85-115 (1985).
Updike, S. et al., "Principles of Long-term Fully Implanted Sensors with Emphasis on Radiotelemetric Monitoring of Blood Glucase from Inside a Subcataneous Foreign Body Capsule (FBC)" in "Biosensors in the Body: Continuous in vivo Monitoring" (John Wiley & Sons, Ltd., 1997) Chapter 4, pp. 117-137.
Updike, S. J., et al., "A Subcutaneous Glucose Sensor With Improved Longevity, Dynamic Range, and Stability of Calibration", Diabetes Care, 2000, vol. 23, pp. 208-214.
Velho, G. et al., "Strategies for calibrating a subcutaneous glucose sensor," Biomed. Biochim. Acta, 48 (11112):957-964 (1989).
Wilson, G. S. et al., "Progress toward the Development of an Implantable Sensor for Glucose," Clinical Chemistry, 38(9):1613-1617 (1992).
Ye, L. et al., "High Current Density "Wired" Quinoprotein Glucose Dehydrogenase Electroade," Anal. Chem., 65(3):238-241 (Feb. 1, 1993).
Australian Examination Report from 2011269796 dated Apr. 3, 2014.
Netherlands Search Report from 2009963 dated Aug. 12, 2013.
European Extended Search Report from 11760268.0 dated Apr. 14, 2014.
International Search Report and Written Opinion from PCT/US2012/068839 dated Feb. 22, 2013.
International Search Report and Written Opinion from PCT/US2016/032485 dated Sep. 12, 2016.
European Search Report from 19151577.4 dated Aug. 16, 2019.
Aussedat, B., et al., "A User-Friendly Method for Calibrating a Subcutaneous Glucose Sensor-Based Hypoglycemic Alarm", Biosensors & Bioelectronics, vol. 12, No. 11, 1997, pp. 1061-1071.
Bennion, N., et al., "Alternate Site Glucose Testing: A Crossover Design", Diabetes Technology & Therapeutics, vol. 4, No. 1, 2002, pp. 25-33.
Claremont, D. J., et al., "Biosensors for Continuous In Vivo Glucose Monitoring", Proceedings of the Annual International Conference of the IEEE Engineering in Medicine and Biology Society, vol. 10, 1988.
Clark Jr., L. C., et al., "Electrode Systems for Continuous Monitoring in Cardiovascular Surgery", Annals New York Academy of Sciences, 1962, pp. 29-45.
Clark Jr., L. C., et al., "Long-term Stability of Electroenzymatic Glucose Sensors Implanted in Mice", American Society of Artificial Internal Organs Transactions, vol. XXXIV, 1988, pp. 259-265.
Csoregi, E., et al., "Design and Optimization of a Selective Subcutaneously Implantable Glucose Electrode Based on 'Wired' Glucose Oxidase", Analytical Chemistry, vol. 67, No. 7, 1995, pp. 1240-1244.
Csoregi, E., et al., "Design, Characterization, and One-Point in Vivo Calibration of a Subcutaneously Implanted Glucose Electrode", Analytical Chemistry, vol. 66 No. 19, 1994, pp. 3131-3138.
Feldman, B., et al., "A Continuous Glucose Sensor Based on Wired Enzyme™ Technology—Results from a 3-Day Trial in Patients with Type 1 Diabetes", Diabetes Technology & Therapeutics, vol. 5, No. 5, 2003, pp. 769-779.
Feldman, B., et al., "Correlation of Glucose Concentrations in Interstitial Fluid and Venous Blood During Periods of Rapid Glucose Change", Abbott Diabetes Care, Inc. Freestyle Navigator Continuous Glucose Monitor Pamphlet, 2004.
Isermann, R., "Supervision, Fault-Detection and Fault-Diagnosis Methods—An Introduction", Control Engineering Practice, vol. 5, No. 5, 1997, pp. 639-652.
Gunasingham, et al., "Electrochemically Modulated Optrode for Glucose", Biosensors & Bioelectronics, vol. 7, 1992, pp. 353-359.
Ikeda, T., et al., "Artificial Pancreas—Investigation of the Stability of Glucose Sensors Using a Telemetry System" (English language translation of abstract), Jpn. J. Artif. Organs, vol. 19, No. 2, 1990, 889-892.
Isermann, R., et al., "Trends in the Application of Model-Based Fault Detection and Diagnosis of Technical Processes", Control Engineering Practice, vol. 5, No. 5, 1997, pp. 709-719.
Johnson, P. C., "Peripheral Circulation", John Wiley & Sons, 1978, pp. 198.
Jungheim, K., et al., "How Rapid Does Glucose Concentration Change in Daily Life of Patients with Type 1 Diabetes?", 2002, pp. 250.
Jungheim, K., et al., "Risky Delay of Hypoglycemia Detection by Glucose Monitoring at the Arm", Diabetes Care, vol. 24, No. 7, 2001, pp. 1303-1304.
Koudelka, M., et al., "In-Vivo Behaviour of Hypodermically Implanted Microfabricated Glucose Sensors", Biosensors & Bioelectronics, vol. 6, 1991, pp. 31-36.
Lager, W., et al., "Implantable Electrocatalytic Glucose Sensor", Hormone Metabolic Research, vol. 26, 1994, pp. 526-530.
Minimed Technologies, "Tape Tips and Other Infusion Site Information", 1995.
Moatti-Sirat, D., et al., "Evaluating In Vitro and In Vivo the Interference of Ascorbate and Acetaminophen on Glucose Detection by a Needle-Type Glucose Sensor", Biosensors & Bioelectronics, vol. 7, 1992, pp. 345-352.
Moatti-Sirat, D., et al., "Reduction of Acetaminophen Interference in Glucose Sensors by a Composite Nafion Membrane: Demonstration in Rats and Man", Diabetologia, vol. 37, 1994, pp. 610-616.
Olievier, C. N., et al., "In Vivo Measurement of Carbon Dioxide Tension with a Miniature Electrodes", Pflugers Archiv: European Journal of Physiology, vol. 373, 1978, pp. 269-272.
Pickup, J., "Developing Glucose Sensors for In Vivo Use", Tibtech, vol. 11, 1993, pp. 285-291.
Pickup, J., et al., "Implantable Glucose Sensors: Choosing the Appropriate Sensing Strategy", Biosensors, vol. 3, 1987/88, pp. 335-346.
Pickup, J., et al., "Potentially-Implantable, Amperometric Glucose Sensors with Mediated Electron Transfer: Improving the Operating Stability", Biosensors, vol. 4, 1989, pp. 109-119.
Poitout, V., et al., "A Glucose Monitoring System for On Line Estimation in Man of Blood Glucose Concentration Using a Miniaturized Glucose Sensor Implanted in the Subcutaneous Tissue and a Wearable Control Unit", Diabetolgia, vol. 36, 1993, pp. 658-663.
Poitout, V., et al., "Calibration in Dogs of a Subcutaneous Miniaturized Glucose Sensor Using a Glucose Meter for Blood Glucose Determination", Biosensors & Bioelectronics, vol. 7, 1992, pp. 587-592.
Quinn, C. P., et al., "Kinetics of Glucose Delivery to Subcutaneous Tissue in Rats Measured with 0.3-mm Amperometric Microsensors", The American Physiological Society, 1995, E155-E161.
Salehi, C., et al., "A Telemetry-Instrumentation System for Long-Term Implantable Glucose and Oxygen Sensors", Analytical Letters, vol. 29, No. 13, 1996, pp. 2289-2308.
Scheller, F., et al., "Enzyme Electrodes and Their Application", Philosophical Transactions of The Royal Society of London B, vol. 316, 1987, pp. 85-94.
Schmidt, F. J., et al., "Calibration of a Wearable Glucose Sensor", The International Journal of Artificial Organs, vol. 15, No. 1, 1992, pp. 55-61.

(56) **References Cited**

OTHER PUBLICATIONS

Schmidtke, D. W., et al., "Measurement and Modeling of the Transient Difference Between Blood and Subcutaneous Glucose Concentrations in the Rat After Injection of Insulin", Proceedings of the National Academy of Sciences, vol. 95, 1998, pp. 294-299.
Shaw, G. W., et al., "In Vitro Testing of a Simply Constructed, Highly Stable Glucose Sensor Suitable for Implantation in Diabetic Patients", Biosensors & Bioelectronics, vol. 6, 1991, pp. 401-406.
Shichiri, M., et al., "Membrane Design for Extending the Long-Life of an Implantable Glucose Sensor", Diabetes Nutrition and Metabolism, vol. 2, 1989, pp. 309-313.
Shichiri, M., et al., "Needle-type Glucose Sensor for Wearable Artificial Endocrine Pancreas", Implantable Sensors for Closed-Loop Prosthetic Systems, Chapter 15, 1985, pp. 197-210.
Thompson, M., et al., "In Vivo Probes: Problems and Perspectives", Clinical Biochemistry, vol. 19, 1986, pp. 255-261.
Velho, G., et al., "In Vitro and In Vivo Stability of Electrode Potentials in Needle-Type Glucose Sensors", Diabetes, vol. 38, No. 2, 1989, pp. 164-171.
Von Woedtke, T., et al., "In Situ Calibration of Implanted Electrochemical Glucose Sensors", Biomedica Biochimica Acta, vol. 48, 1989, pp. 943-952.
Chinese Patent Application No. CN 2010800064817, Original Language and English Translation of Office Action dated Dec. 2, 2014.
European Patent Application No. 10739015.5, Extended European Search Report dated May 10, 2013.
Ahson, S., et al., "RFID Handbook: Applications, Technology, Security, and Privacy", 2008, Chapter 4, Far-Field Tag Antenna Design Methodology, and Chapter 13, RFID Tags for Metallic Object Identification, pp. 71 and 253-254.
Application Note AN048, Antenna Part No. FR05-S1-N-0-102, Company Reach Xtend™, Bluetooth®, 802.11b/g WLAN Chip Antenna, 2008, pp. 1-13.
Application Note AVR2023—AT86RF231 PCB reference design for antenna diversity, Atmel Corporation, 2008, pp. 1-15.
Application Note nRF9E5 RF and antenna layout, Nordic Semiconductor, 2006, pp. 1-13.
Benkič, K., et al., "Using RSSI value for distance estimation in Wireless sensor networks based on ZigBee", 15th International Conference on Systems, Signals and Image Processing, Bratislava, Slovakia, 2008, pp. 1-4.
"Bluetooth Antenna Design", National Semiconductor Application Note, 2005, pp. 1-16.
Callaway, Jr., E. H., "Wireless Sensor Networks: Architectures and Protocols", 2004, Chapter 8, Antennas and the Definition of RF Performance, pp. 201-202.
Frenzel, L. E., "Printed-Circuit-Board Antennas, retrieved from https://www.electronicdesign.com/technologies/boards/article/21751417/printedcircuitboard-antennasprint/3266", Electronic Design, 2005, pp. 1-4.
Gonzalez, O. L., et al., "Low-Cost Wireless Sensors—Designer Reference Manual", Freescale Semiconductor, 2007, pp. 1-146.
Güler, N. F., et al., "Theory and Applications of Biotelemetry", Journal of Medical Systems, 2002, vol. 26, No. 2, pp. 159-178.
Heftman, G., "Chip Antenna Reduces Cell-Phone Dimensions", Microwaves & RF, 1999, p. 182.
Huang, Y., et al., "Antennas from Theory to Practice", 2008, Chapter 8, Antenna Diversity, pp. 322-325.
James, Jr., et al., "Handbook of Microstrip Antennas",1969, pp. 1038-1047.
Loy, M., et al., "ISM—Band and Short Range Device Antennas", Texas Instruments Application Report, 2005, pp. 1-38.
Microchip Technology Inc., MRF24J40MA Data Sheet, 2008, pp. 1-30.
Moore, B., "The Potential Use of Radio Frequency Identification Devices for Active Monitoring of Blood Glucose Levels", Journal of Diabetes Science and Technology, 2009, vol. 3, No. 1, pp. 180-183.
"Murata Puts Antenna on a Chip", Passives, 1999, vol. 44, 1 page.
Schoepke, E., "Chip Antenna Layout Considerations for 802.11 Applications", Johanson Technology, 2006, retrieved from https://www.johansontechnology.com/chip-antenna-layout-considerations-for-802-11-applications, pp. 1-7.
Sharawi, M. S., "Use of low-cost patch antennas in modern wireless technology", IEEE Potentials, 2006, pp. 35-38 and 47.
Waterhouse, R., "Printed Antennas for Wireless Communications," 2007, pp. 116-129 and 284-289.
Wong, KL, "Planar Antennas for Wireless Communications," 2003, Chapter 1, Introduction and Overview, pp. 4-17, 38-45, and 218-221.
EP, 10739015.5 Extended Search Report, dated May 10, 2013.
EP, 19151577.4 Extended Search Report, dated Aug. 16, 2019.
EP, 17201183.5 Extended Search Report, dated May 7, 2018.
EP, 20177703.4 Extended Search Report, dated Sep. 25, 2020.
EP, 20177712.5 Extended Search Report, dated Sep. 30, 2020.

* cited by examiner

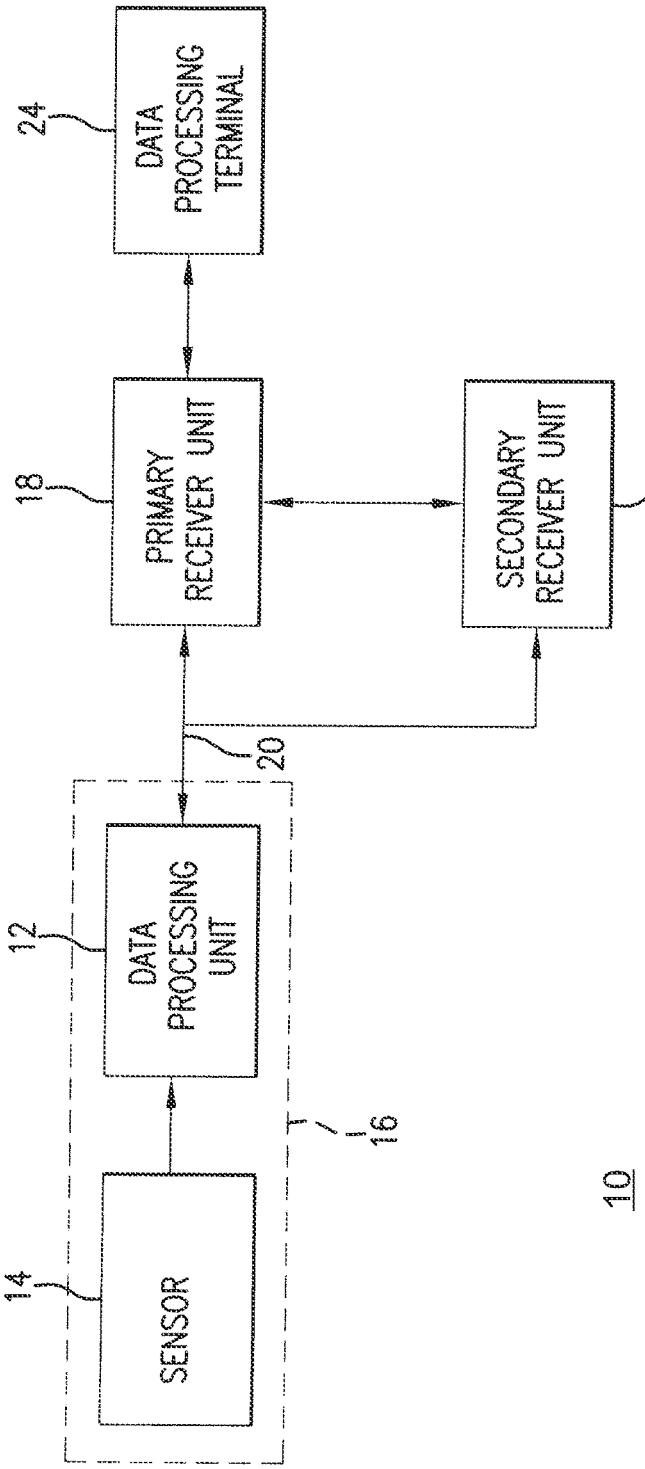
24
DATA PROCESSING TERMINAL
18
PRIMARY RECEIVER UNIT
SECONDARY RECEIVER UNIT
22
20
12
DATA PROCESSING UNIT
16
14
SENSOR
10

FIG. 1

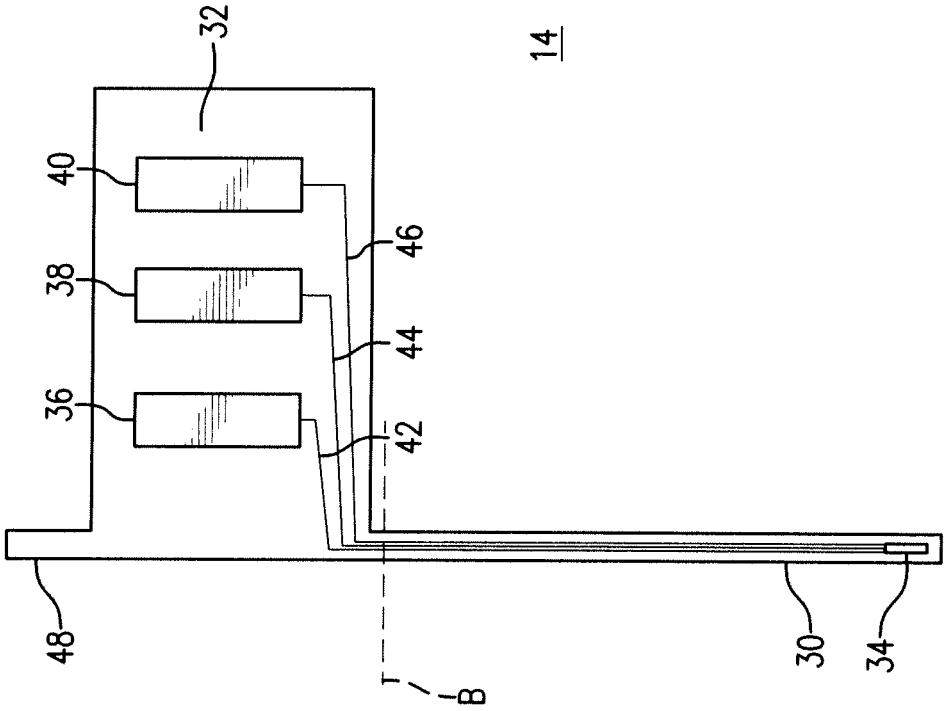

FIG. 2

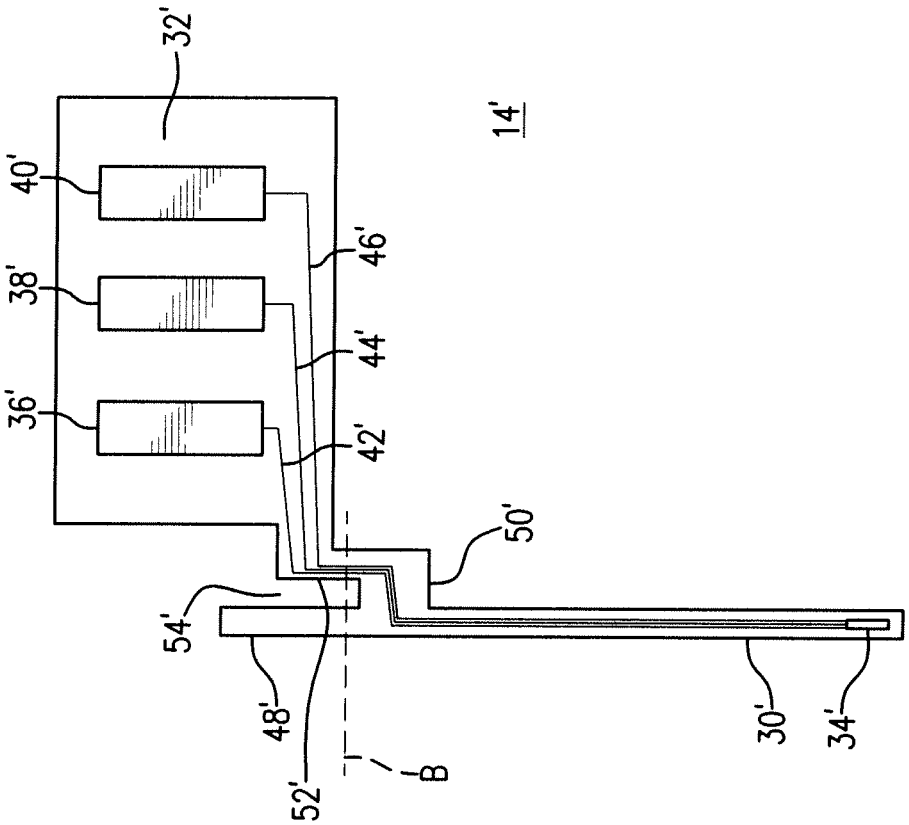

FIG. 3

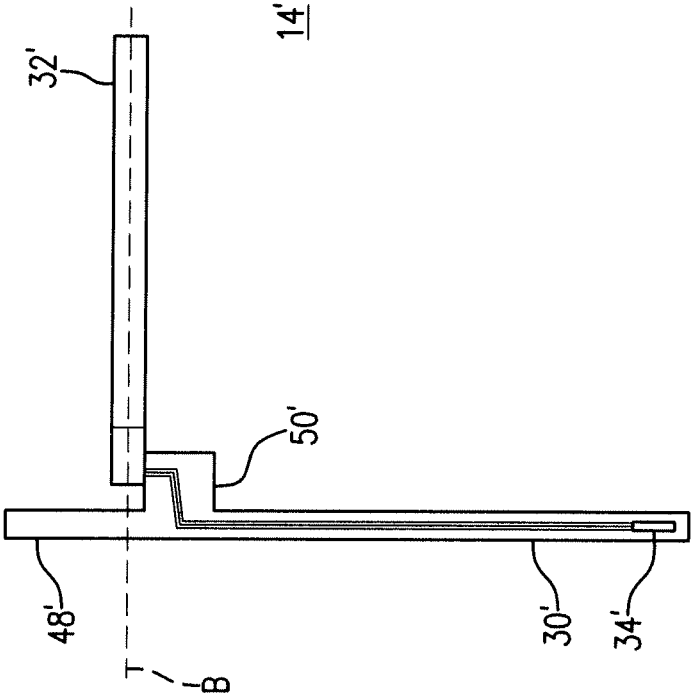

FIG. 4

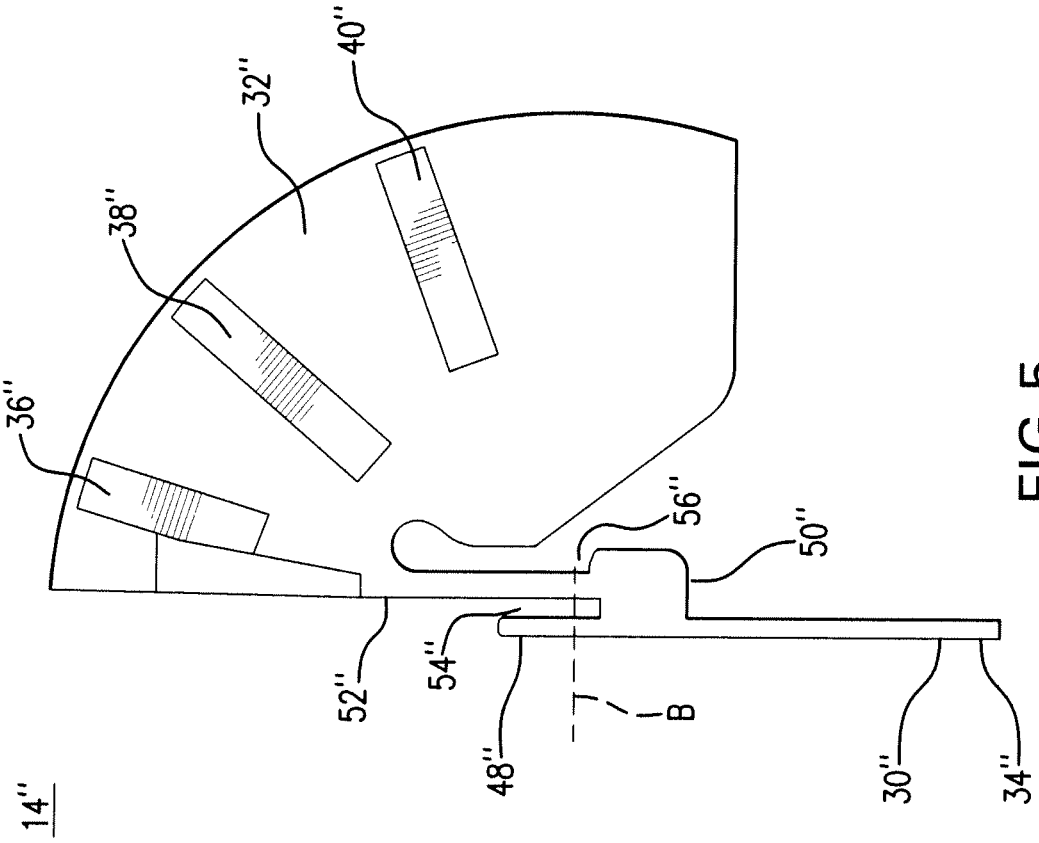

FIG.5

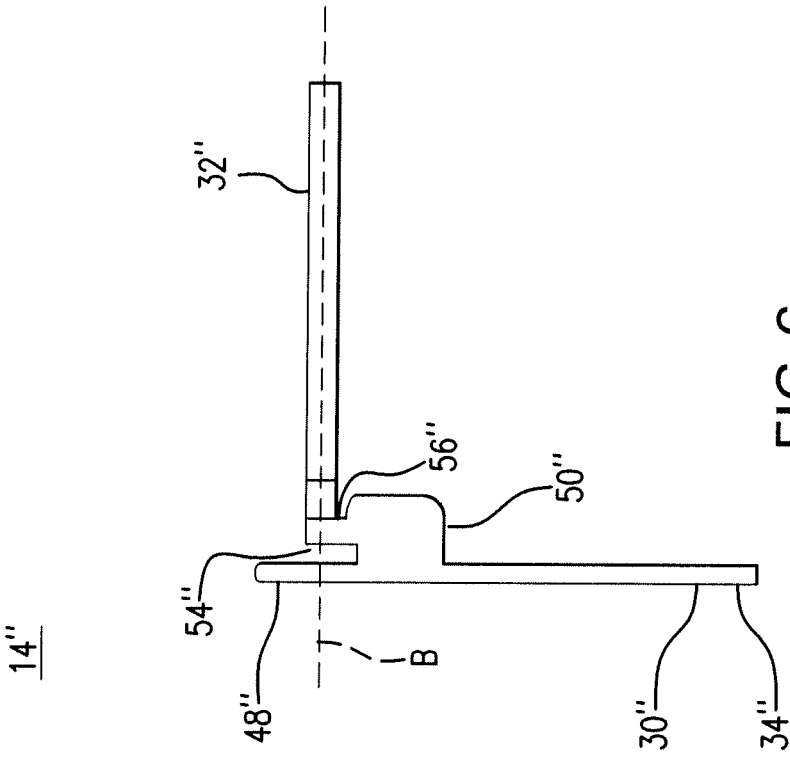

FIG. 6

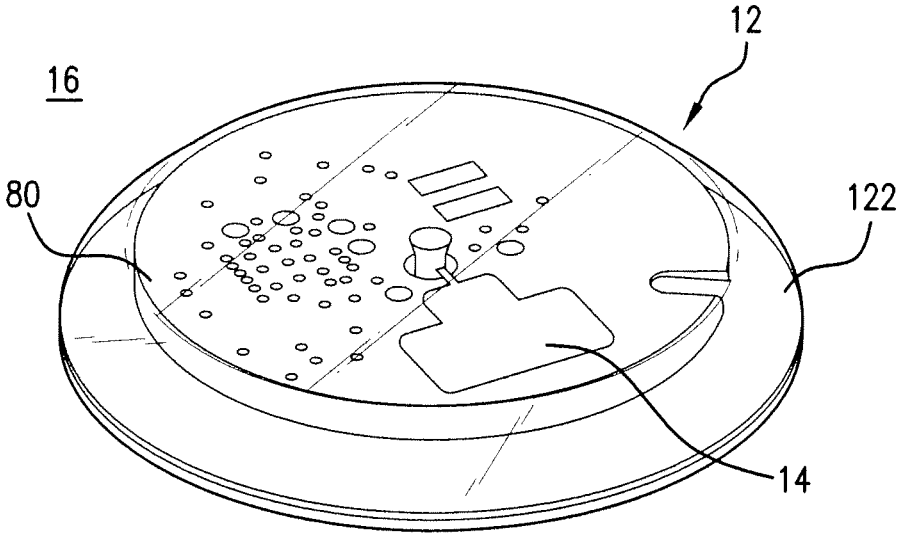

FIG.7

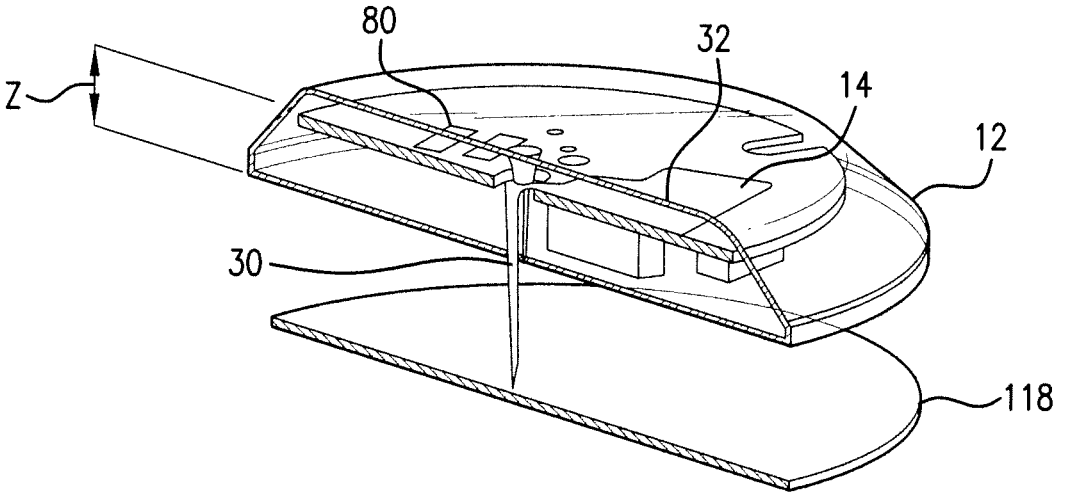

FIG.8

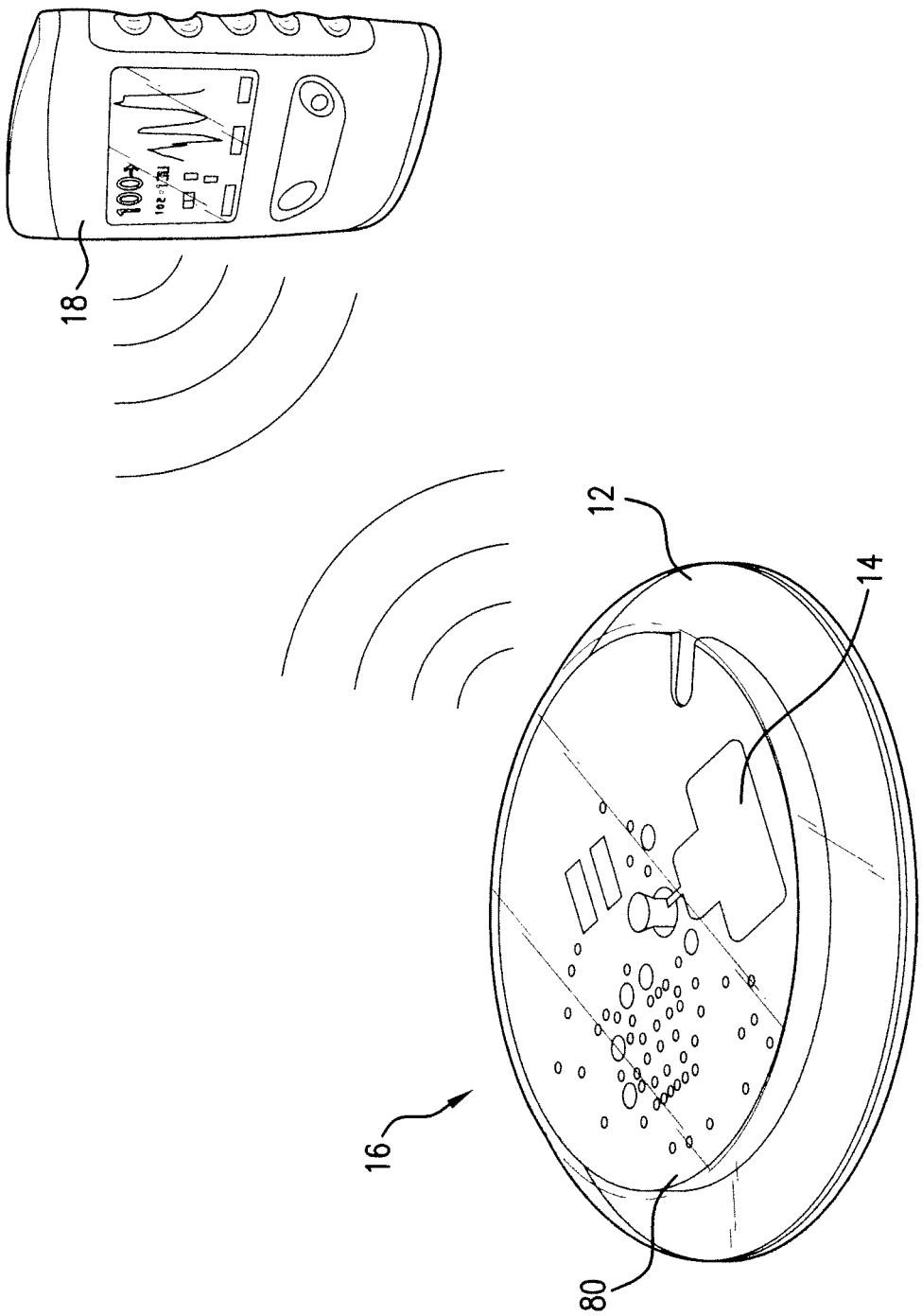

FIG.9

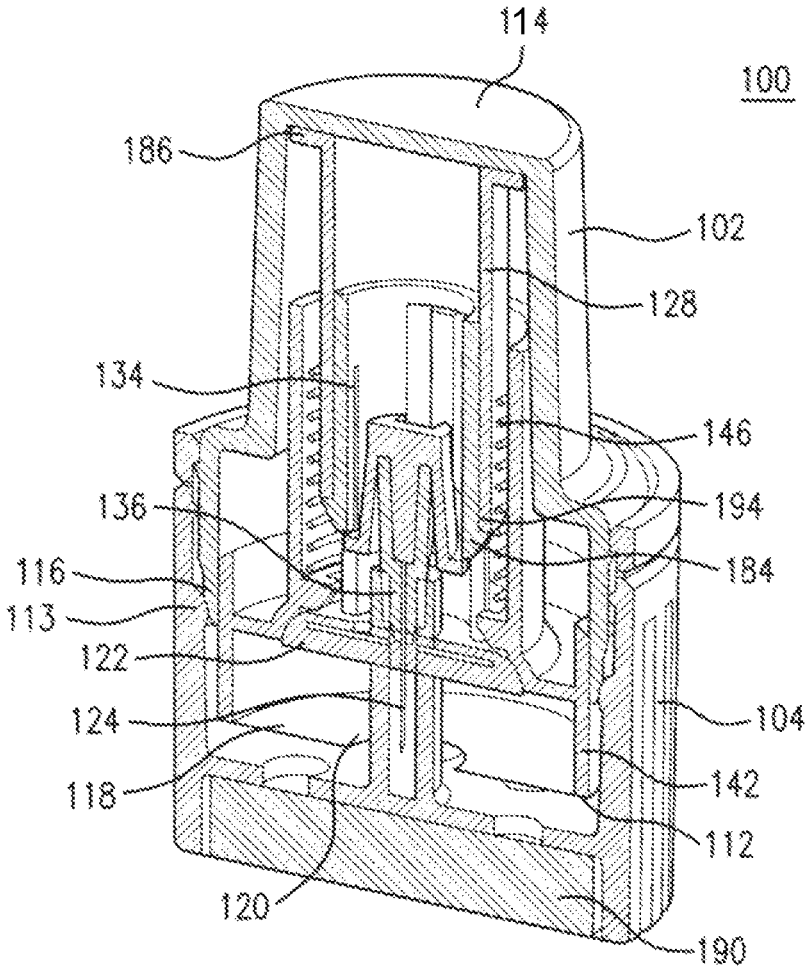
114
100
186
102
128
134
146
136
194
116
184
113
122
124
104
118
142
112
120
190

FIG. 10

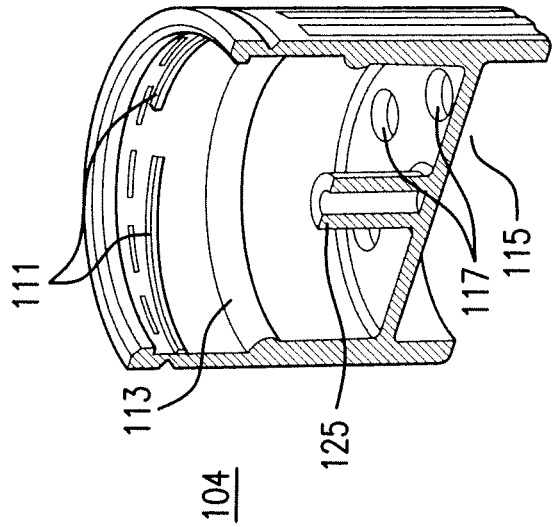

FIG. 12

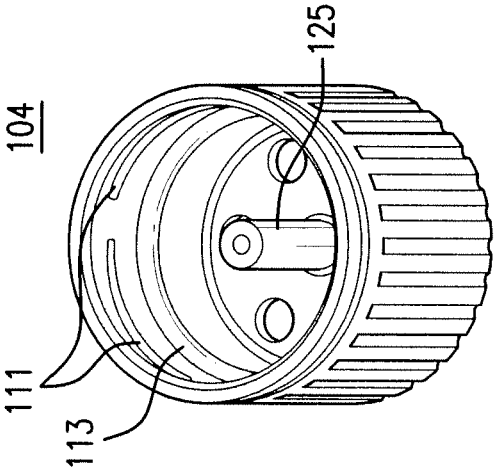

FIG. 13

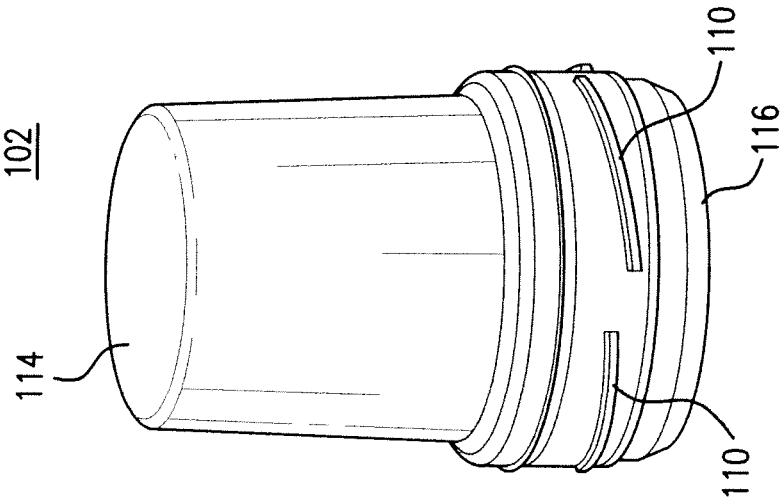

FIG. 11

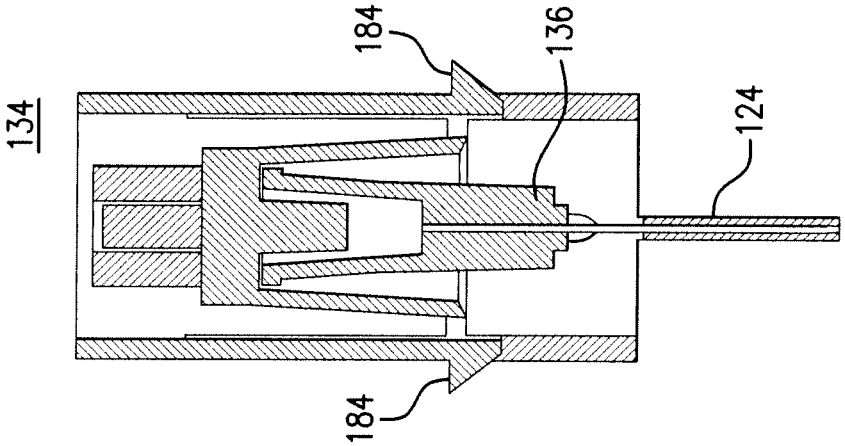

FIG. 16

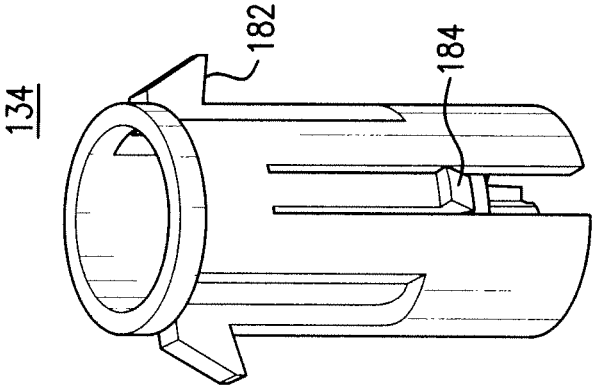

FIG. 15

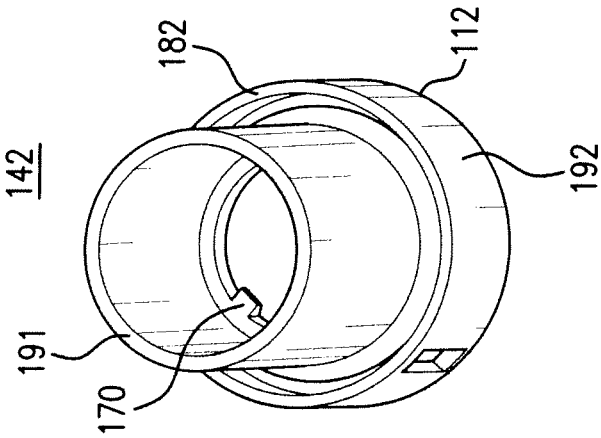

FIG. 14

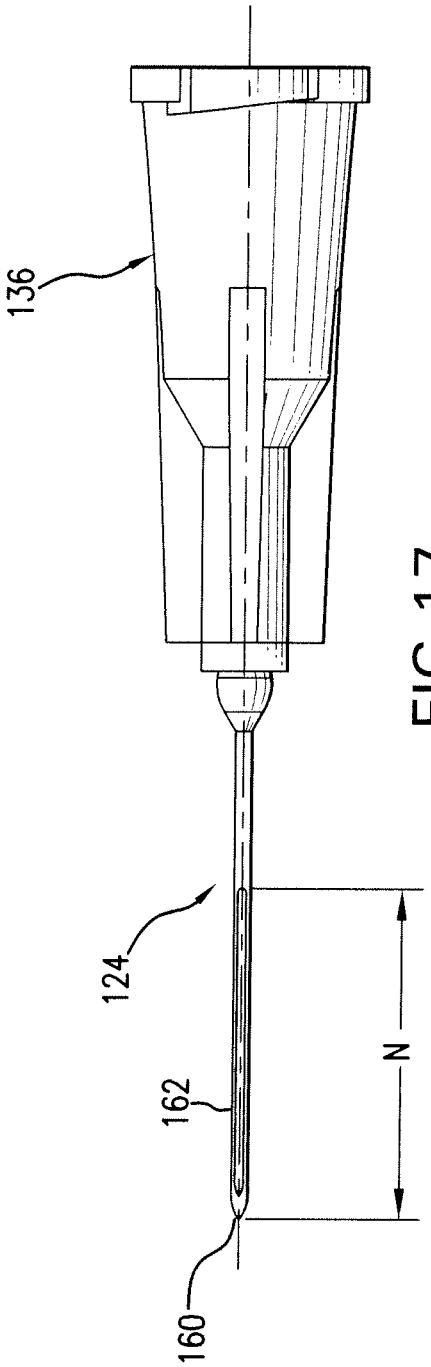

FIG. 17

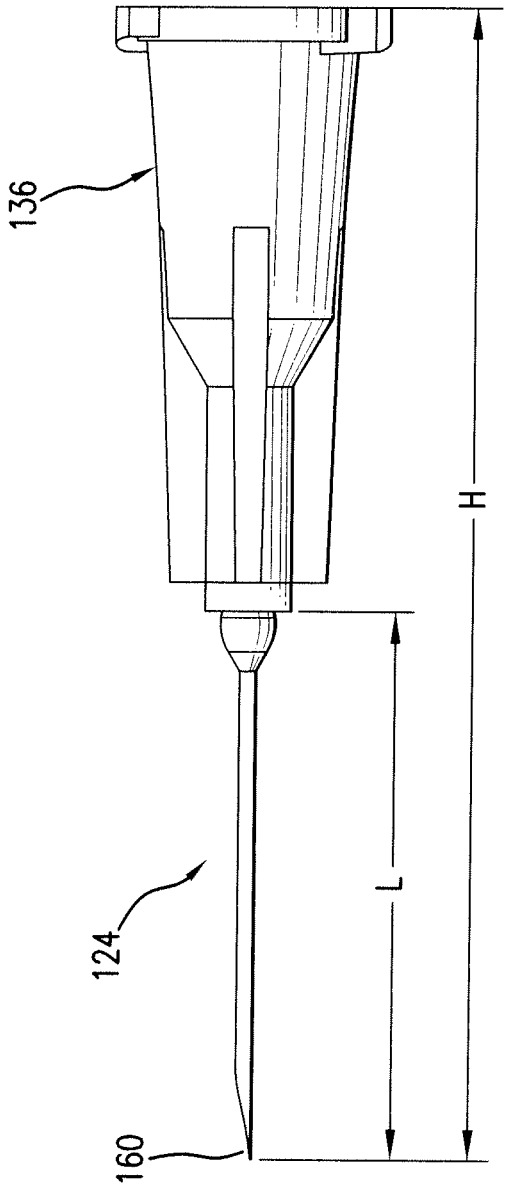

FIG. 18

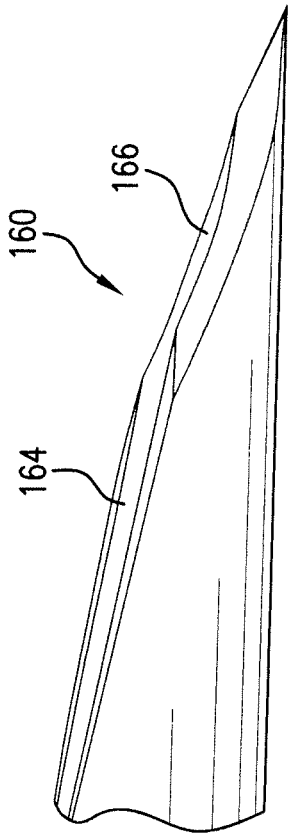

FIG.20

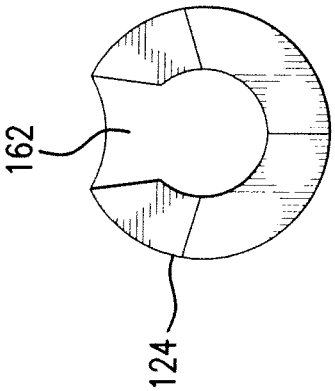

FIG.19

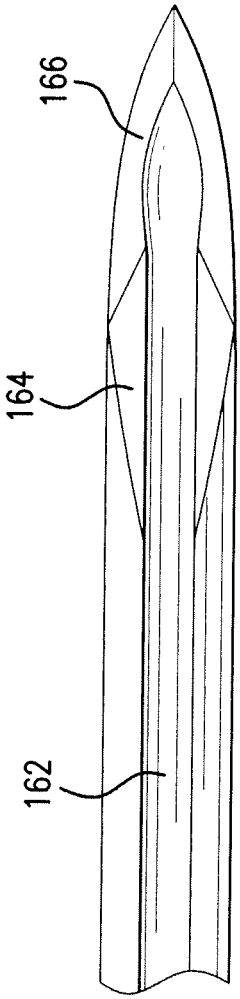

FIG.21

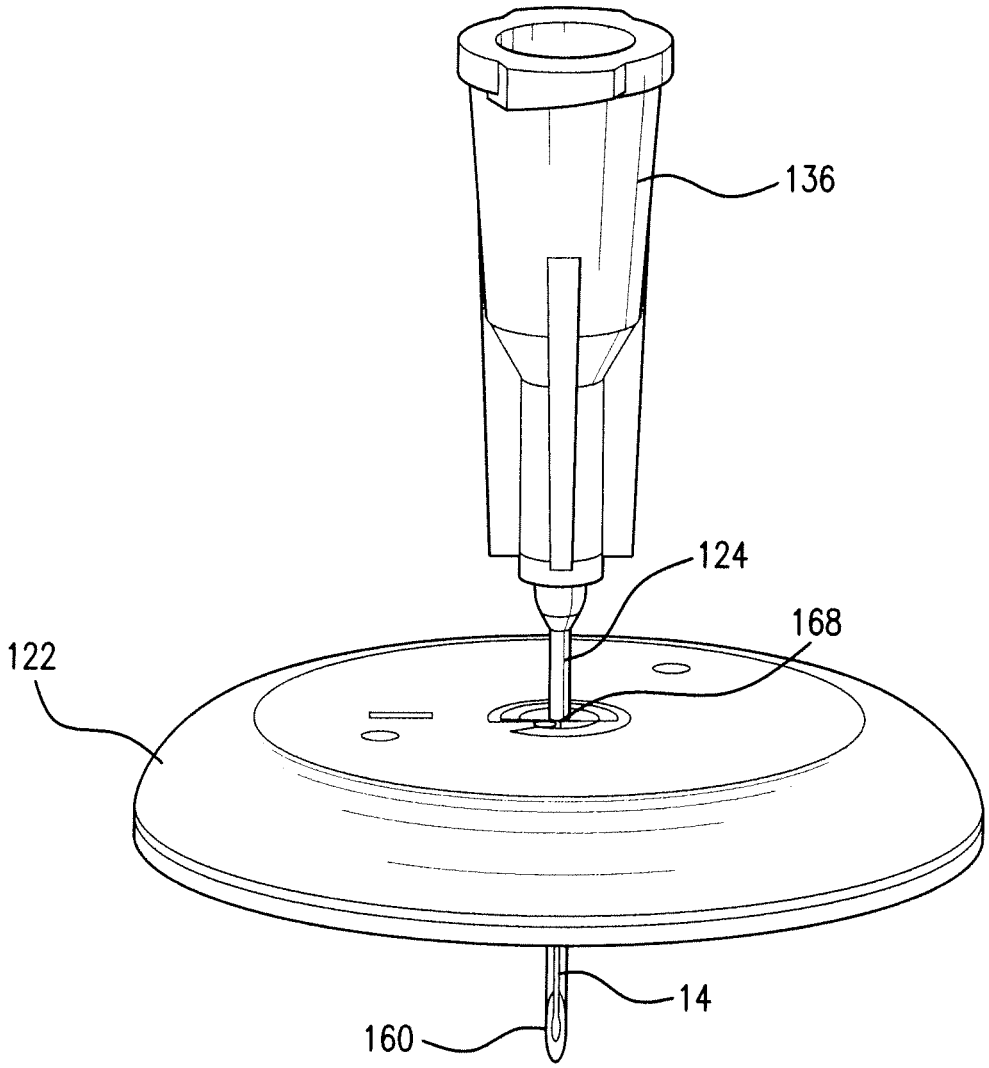

FIG.22

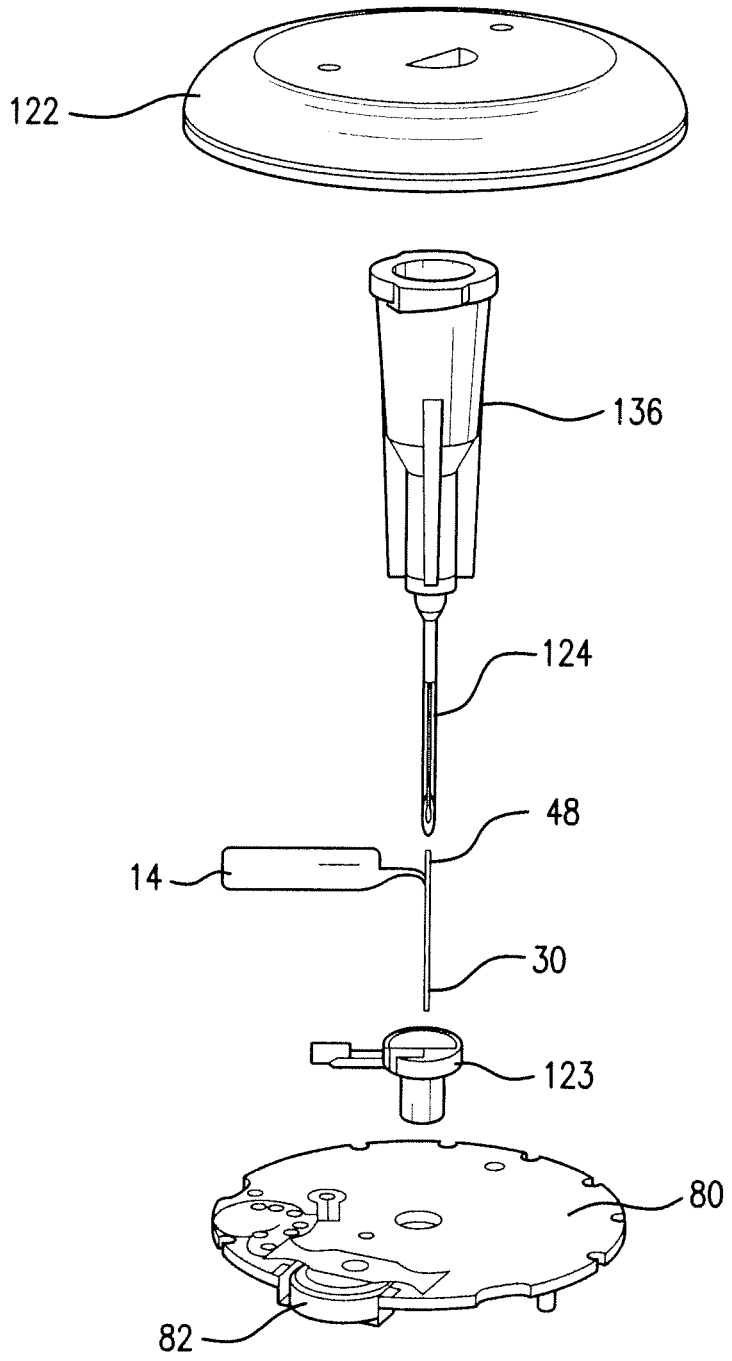

FIG.23

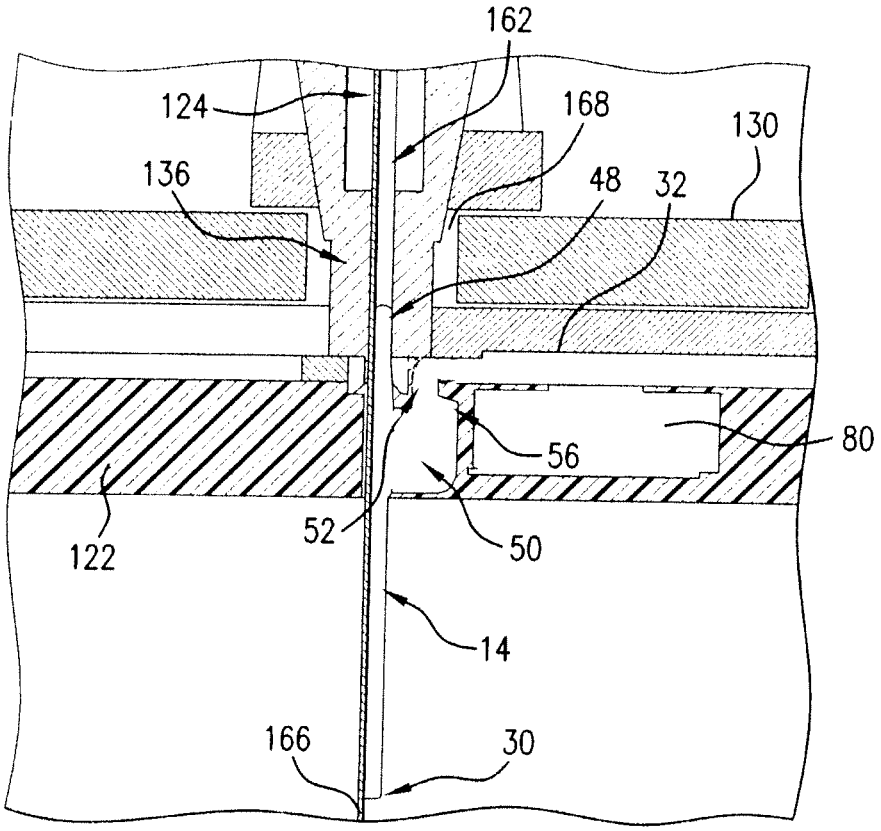

FIG.24

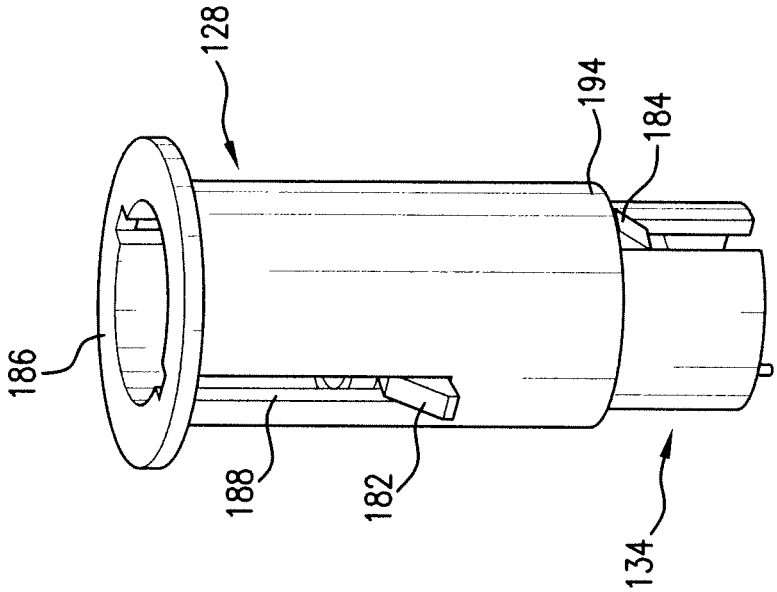

FIG.26

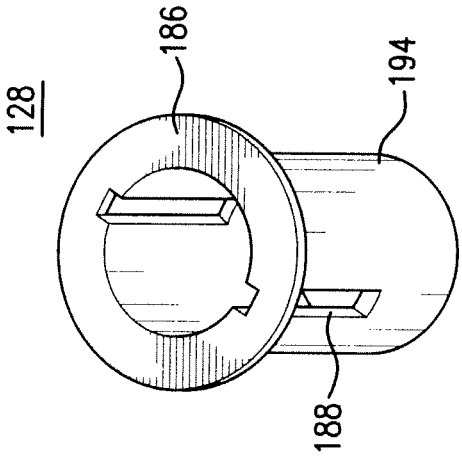

FIG.25

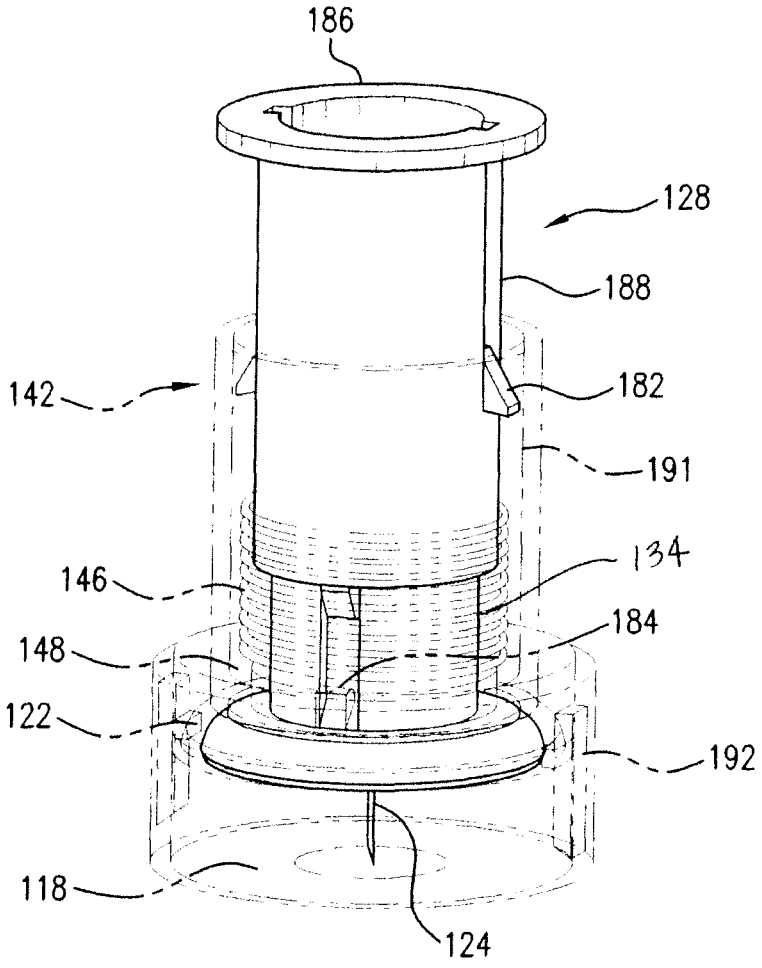

FIG.27

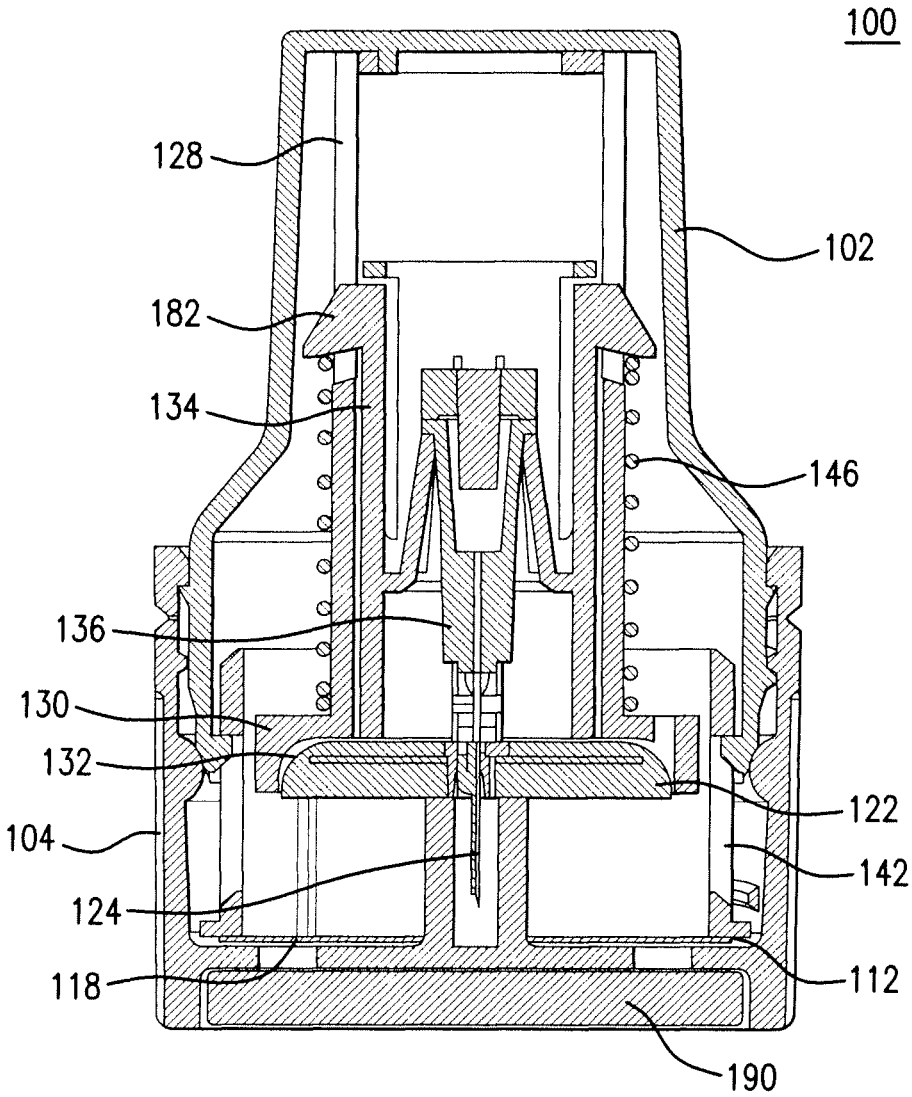

FIG.28

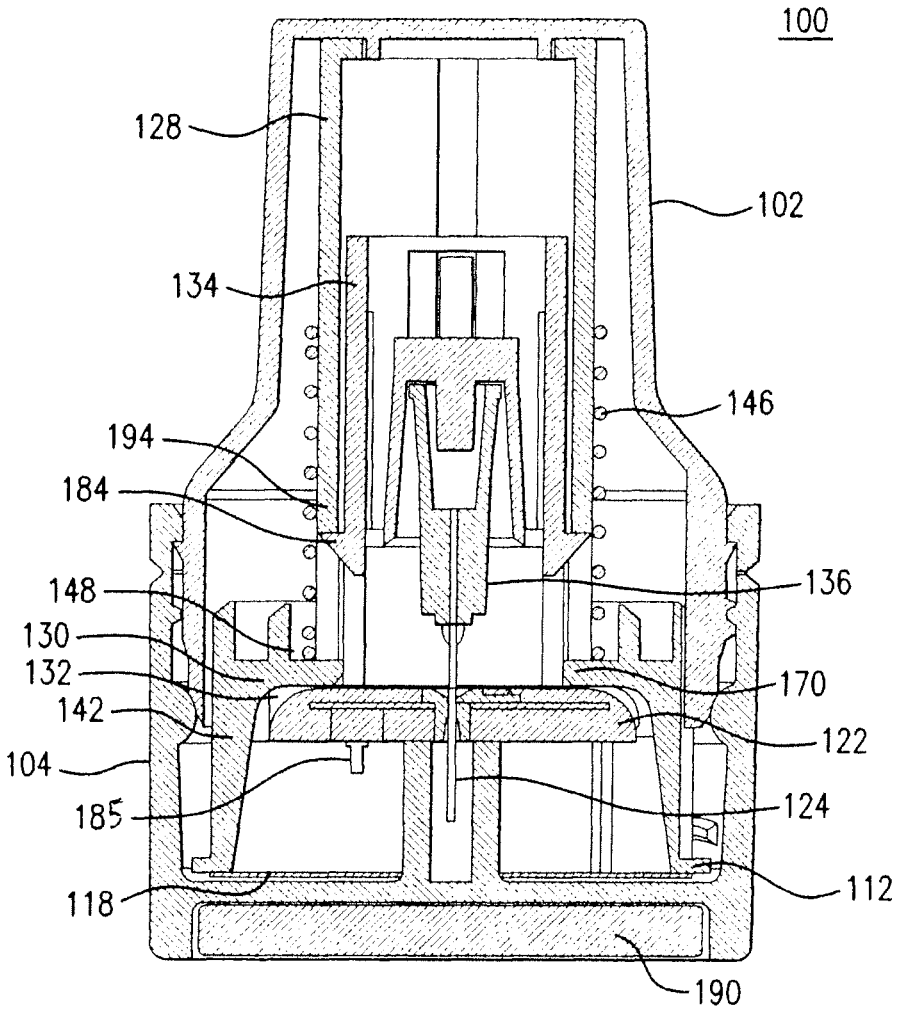
100
128
102
134
146
194
184
136
148
130
132
170
142
122
104
124
185
112
118
190

FIG.29

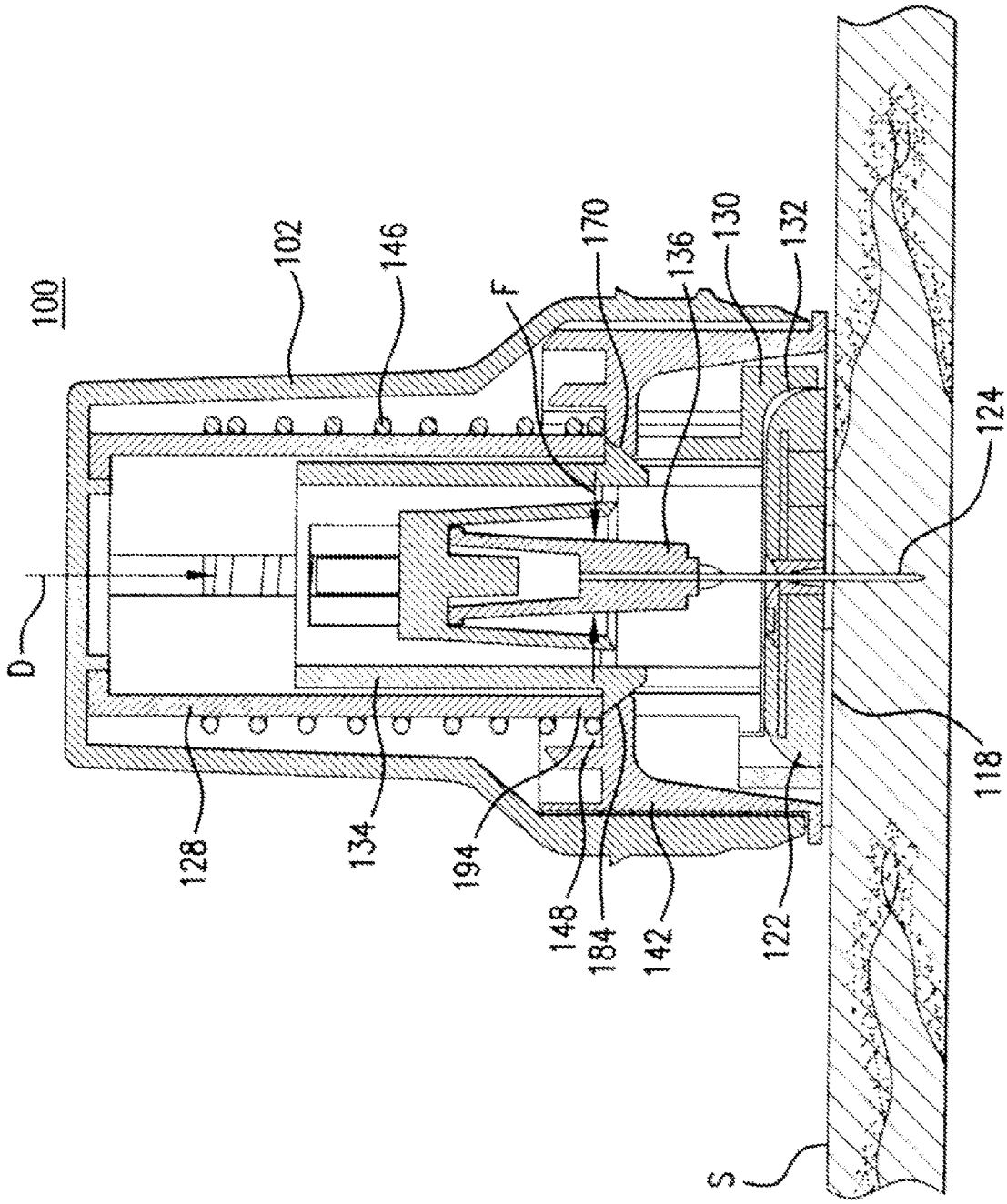
100
102
146
F
170
136
130
132
124
D
128
134
194
148
184
142
122
118
S

FIG.3O

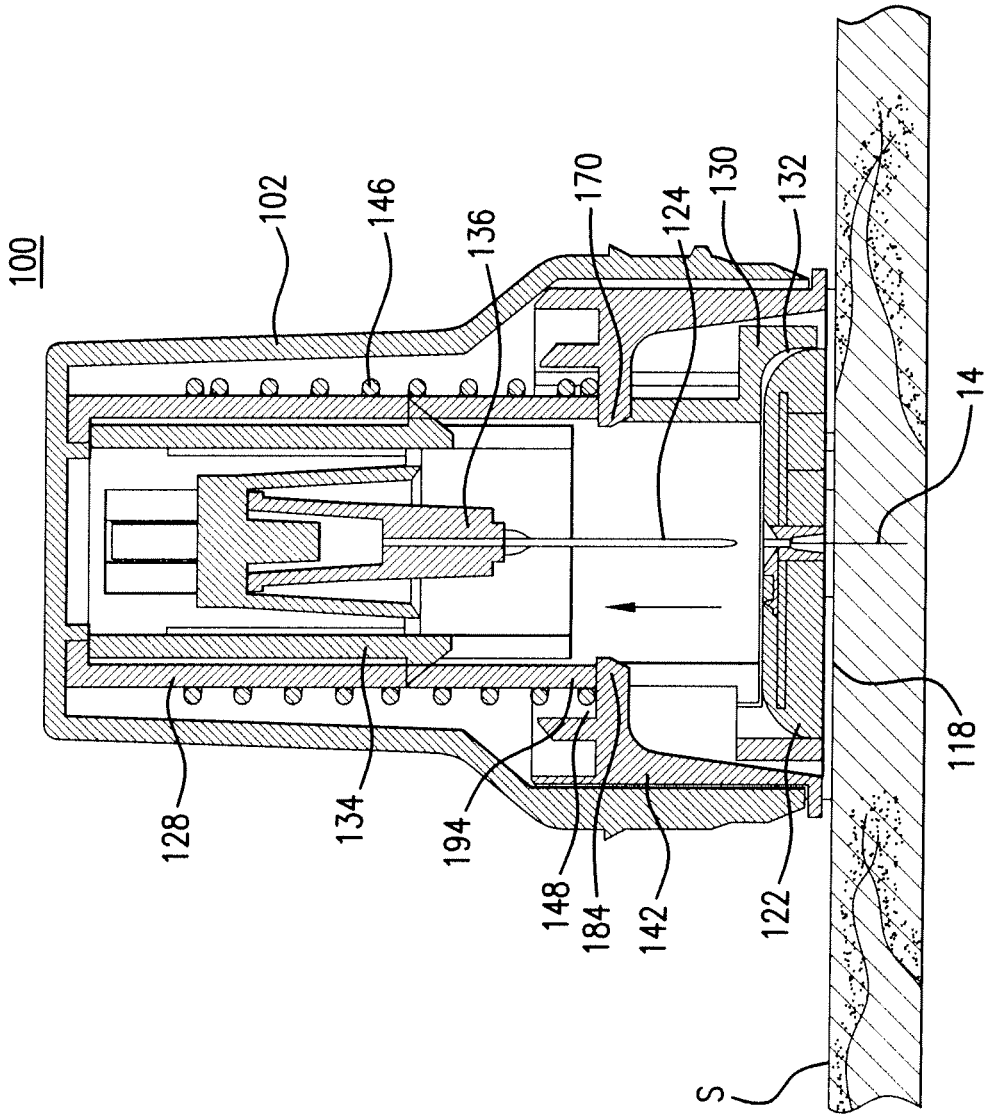
100
102
146
136
170
124
130
132
14
118
128
134
194
148
184
142
122
S

FIG. 31

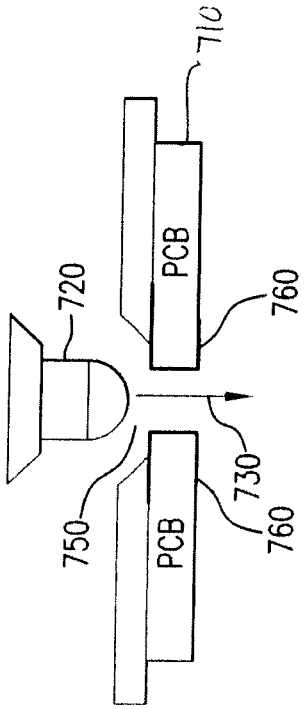

FIG.32

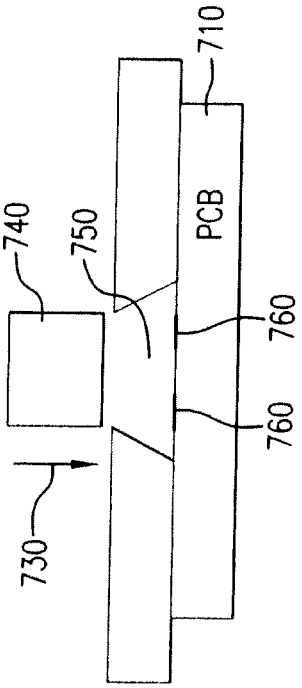

FIG.33

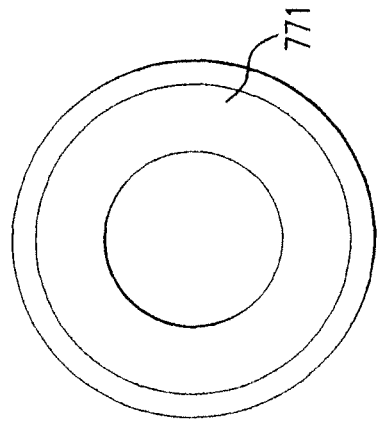

FIG.35A

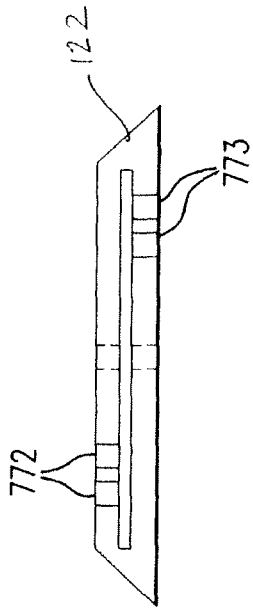

FIG.35B

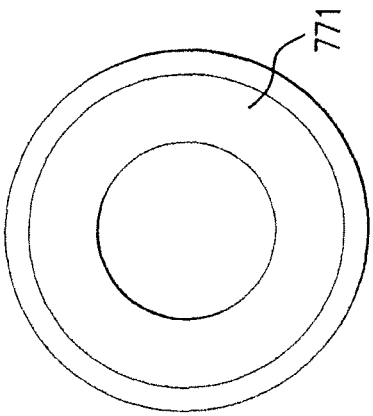

FIG.34A

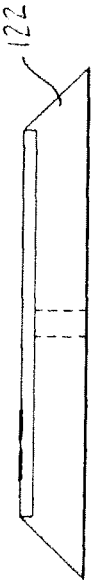

FIG.34B

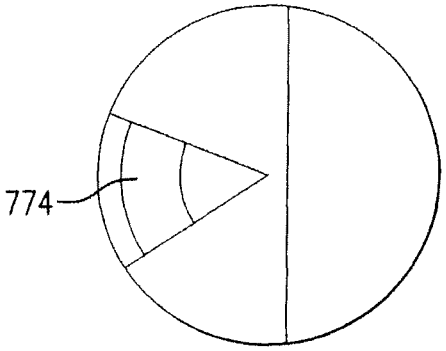

FIG.36A

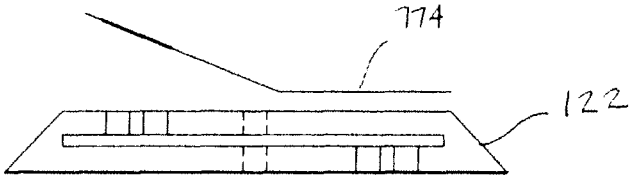

FIG.36B

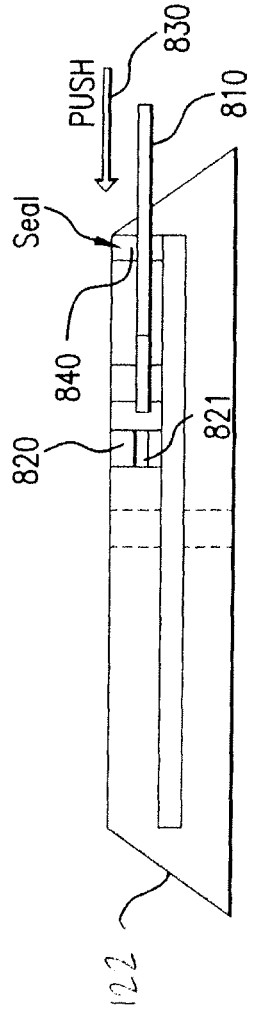

FIG.37

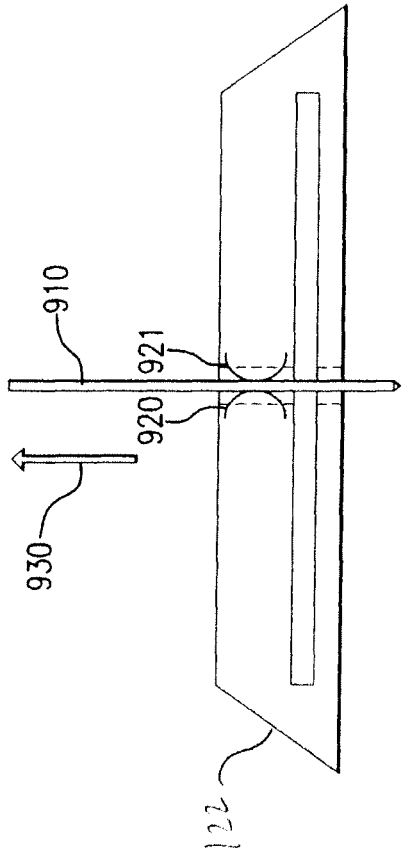

FIG.38

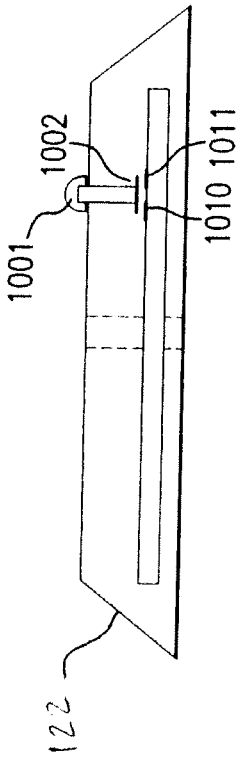

FIG. 39

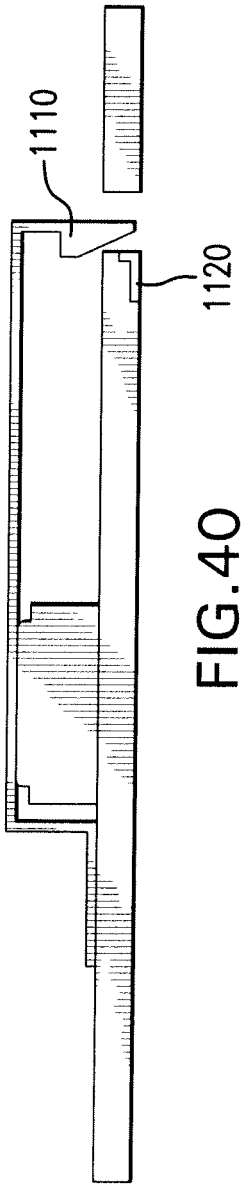

FIG.40

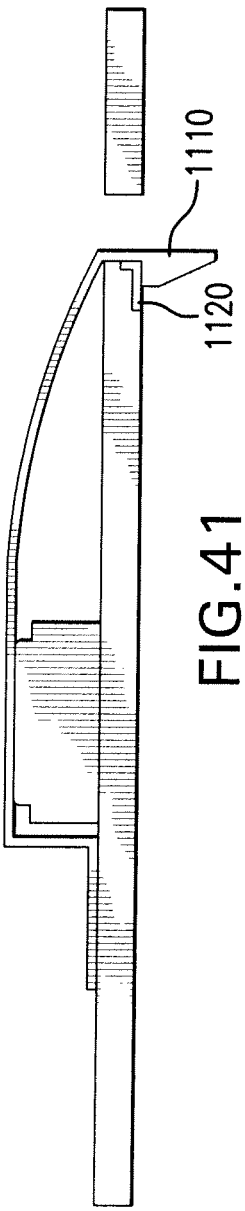

FIG.41

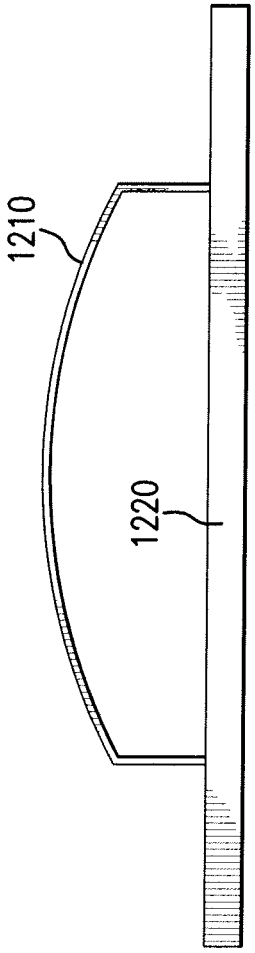

FIG.42

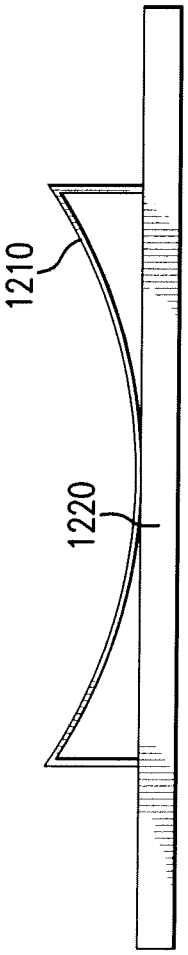

FIG.43

ANALYTE SENSOR AND APPARATUS FOR INSERTION OF THE SENSOR

CROSS-REFERENCE TO RELATED APPLICATIONS

The present application is a continuation of U.S. patent application Ser. No. 17/009,647, filed Sep. 1, 2020, which is a continuation of U.S. patent application Ser. No. 16/736,728, filed Jan. 7, 2020, now U.S. Pat. No. 10,786,190, which is a continuation of U.S. patent application Ser. No. 15/994,129, filed May 31, 2018, now abandoned, which is a continuation of U.S. patent application Ser. No. 15/475,647, filed Mar. 31, 2017, now U.S. Pat. No. 9,993,188, which is a continuation of U.S. patent application Ser. No. 15/192,531, filed Jun. 24, 2016, now U.S. Pat. No. 9,636,068, which is a continuation of U.S. patent application Ser. No. 12/698,129, filed Feb. 1, 2010, now U.S. Pat. No. 9,402,544, which claims priority to U.S. Provisional Application No. 61/149,639, filed Feb. 3, 2009, all of which are incorporated herein by reference in their entireties for all purposes. This application is further related to U.S. patent application Ser. No. 12/698,124, filed Feb. 1, 2010, the disclosure of which is incorporated by reference in its entirety herein for all purposes.

FIELD OF THE INVENTION

The present invention relates generally to an inserter device, for example, to insert an analyte sensor and/or an infusion set in an animal such as a human.

BACKGROUND OF THE INVENTION

Diabetes Mellitus is an incurable chronic disease in which the body does not produce or properly utilize insulin. Insulin is a hormone produced by the pancreas that regulates blood sugar (glucose). In particular, when blood sugar levels rise, e.g., after a meal, insulin lowers the blood sugar levels by facilitating blood glucose to move from the blood into the body cells. Thus, when the pancreas does not produce sufficient insulin (a condition known as Type 1 Diabetes) or does not properly utilize insulin (a condition known as Type II Diabetes), the blood glucose remains in the blood resulting in hyperglycemia or abnormally high blood sugar levels.

The vast and uncontrolled fluctuations in blood glucose levels in people suffering from diabetes cause long-term, serious complications. Some of these complications include blindness, kidney failure, and nerve damage. Additionally, it is known that diabetes is a factor in accelerating cardiovascular diseases such as atherosclerosis (hardening of the arteries), leading to stroke, coronary heart disease, and other diseases. Accordingly, one important and universal strategy in managing diabetes is to control blood glucose levels.

One way to manage blood glucose levels is testing and monitoring blood glucose levels by using conventional in vitro techniques, such as drawing blood samples, applying the blood to a test strip, and determining the blood glucose level using colorimetric, electrochemical, or photometric test meters. Another more recent technique for monitoring blood glucose levels is by using an in vivo glucose monitoring system, that continuously or automatically tests glucose, such as for example, the FreeStyle Navigator® Continuous Glucose Monitoring System, manufactured by Abbott Diabetes Care Inc. Unlike conventional blood glucose meters, continuous analyte monitoring systems employ an insertable or implantable sensor, which detects and

monitors blood glucose levels. Prior to each use of a new sensor, the user self-implants at least a portion of the sensor under his skin. Typically, an inserter assembly is employed to insert the sensor in the body of the user. In this manner, an introducer sharp, while engaged to the sensor, pierces an opening into the skin of the user, releases the sensor and is removed from the body of the user. Accordingly, there exists a need for an easy-to-use, simple, insertion assembly which is reliable, minimizes pain, and is easy to use.

SUMMARY

Sensor assemblies that include a medical device, such as an analyte sensor (e.g., a glucose sensor) and/or an infusion device, and a device to position at least a portion of the medical device beneath a skin surface of a user are provided, as well as methods of positioning at least a portion of a medical device such as an analyte sensor (e.g., a glucose sensor) and/or an infusion device beneath a skin surface of a user, and methods of analyte testing.

Sensor assembly embodiments include a mount adapted to adhere to a skin of a subject; an analyte sensor coupled to the mount, and an insertion sharp having a longitudinal body including a longitudinal opening to receive at least a portion of the sensor body.

In certain embodiments, the sensor includes a body having a proximal section and a distal section, and the distal section may be longitudinally (or otherwise) aligned with the proximal section. Some sensor embodiments may include an intermediate section. An intermediate section, if present, may be laterally displaced from at least the distal member (or distal section), and a gap may be defined between the laterally displaced intermediate section and a portion of the distal section. In some embodiments, the sensor is integrated with the mount to define an on-body device such as a single unit on-body device. A second gap may be defined in the sensor between the proximal section and the laterally displaced intermediate section. The proximal section of the sensor may have a substantially curved profile.

In some embodiments, the distal section of the sensor body is received in the longitudinally defined opening of the insertion sharp. A gap may be defined between the distal section and the laterally displaced intermediate section, which allows the distal section, in some embodiments a substantial portion—including the entirety of the distal section, to be received in the longitudinal opening of the insertion needle. The intermediate section and the proximal section may be proximate the distal section received in the insertion needle.

In some embodiments, the proximal section of the sensor body is in communication with conductive material disposed on the mount. The conductive material disposed on the mount may define a printed circuit board. The proximal section of the sensor may be disposed in a horizontal plane, and the distal section of the sensor body may be disposed in a vertical plane. In some embodiments, the sensor is a transcutaneous sensor. In some embodiments, the sensor is configured for implantation in a soft tissue of a user. In some embodiments, the sensor is a glucose sensor.

Embodiments include sensor assemblies which include a sensor comprising a portion for operative contact with a fluid of the subject; a mount defining a distal surface adapted for attachment to the skin of a subject and housing a circuit coupled to sensor for performing a function with the sensor; and a switch at least partially disposed in the mount comprising a member having a first position which protrudes

from the distal surface of the mount and a second position which is recessed in the mount, the member configured to activate the circuit when in the second position.

In some embodiments, the member is biased in the first position. The member may comprise an elongated member disposed in an opening in the mount. In some embodiments, the member is moved from the first position to the second position when the mount contacts the skin of the subject. In some embodiments, an adhesive layer is disposed on the skin of the subject, and wherein the member is moved from the first position to the second position when the mount contacts the adhesive layer.

In some embodiments, the switch activates the circuit upon the member reaching the second position. In some embodiments, the switch activates the circuit as long as the member is maintained in the second position. In some embodiments, the sensor is a glucose sensor.

In some embodiments, the circuit applies a potential to the sensor. In some embodiments, the circuit applies a current to the sensor.

In some embodiments, a monitor unit is provided to receive information from the sensor/on-body unit. For example, the system is configured for communication (wired or wirelessly) between the on-body unit and a monitor unit, e.g., using radio frequency communication or other protocol. The communication between the two units may be active or passive. In certain embodiments, the on-body unit circuit includes communication components for wired or wireless transmission of signal relating to analyte level monitored by the sensor to the monitor unit. In certain embodiments, RFID components may be included in the on-body unit and monitor unit to enable RFID communication, in which the on-body unit provides data communication to the monitor unit in response to one or more commands or data communication received from the monitor unit. In some embodiments, the transmitter transmits a signal to the receiver automatically, e.g., continuously or in certain embodiments only periodically, such as according to a predetermined schedule. In some embodiments, in addition to or instead of automatic data communication, the on-body unit may transmit signal to the receiver only in response to a request for the data, e.g., received from the monitor unit or otherwise initiated by the user (e.g., activation of a switch on the receiver or on-body unit to initiate data transfer). In some embodiments, a memory is provided, and the circuit stores a signal relating an analyte level provided by the sensor to the memory. In some embodiments, the sensor is a glucose sensor.

Embodiments include apparatuses for inserting medical devices through the skin of a subject. An insertion apparatus may include a sheath defining a distal surface for placement on the skin of the subject; a handle movable between a proximal position and distal position relative to the sheath; a device support for supporting the medical device and defining an aperture therethrough; a sharp support for supporting a sharp extending through said aperture and coupled to the handle; and driver for biasing the handle and the sharp support towards the proximal position.

In some embodiments, the driver comprises a compression member such as a compression spring. In some embodiments, the handle is at least partially disposed within the sheath. In some embodiments, the handle is at least partially disposed surrounding the sheath. In some embodiments, a bellows portion is provided which is disposed between the handle and the sheath.

In some embodiments, the sharp support is permanently fixed to the handle. In some embodiments, the device support is permanently affixed to the handle.

In some embodiments, a stop portion for retaining the device support in the distal position is included. In some embodiments, the device support is coupled to the sharp support until the device support reaches a distal position.

In some embodiments, the device support is uncoupled from the sharp support when the device support reaches the distal position. In some embodiments, a retention member is provided to couple the sharp support to the sheath when the sharp support is disposed in the proximal position.

In some embodiments, the medical device is an analyte sensor. In some embodiments, the medical device is a glucose sensor. In some embodiments, the medical device is an infusion set.

In certain embodiments, apparatuses for inserting a medical device through the skin of a subject, are provided which include a sheath defining a distal surface for placement on the skin of the subject; a handle movable between a proximal position and distal position; a device support for supporting the medical device and defining an aperture therethrough, the device support coupled to the handle; a sharp support for supporting a sharp extending through said aperture and coupled to the device support; and driver for biasing the sharp support towards the proximal position.

In some embodiments, the driver comprises a compression spring. In some embodiments, the handle is at least partially disposed surrounding the sheath.

In some embodiments, a stop portion for retaining the device support in the distal position is included. In some embodiments, the device support is coupled to the sharp support until the device support reaches a distal position. In some embodiments, the device support is uncoupled from the sharp support when the device support reaches the distal position.

Embodiments of analyte sensors are provided which include a body having a proximal section and a distal section. The distal section may be longitudinally aligned with the proximal section. An intermediate section may be included between the proximal and distal sections, and in some embodiments the intermediate section is laterally displaced from at least the distal member. A gap may be defined between the laterally displaced intermediate section and a portion of the distal section.

In some embodiments, the intermediate section is laterally displaced from at least a portion of the proximal section of the sensor body. A second gap may be defined between the laterally displaced intermediate section and the proximal section of the sensor body. The intermediate section may have a distal end and a proximal end, and further the proximal section may be coupled to the proximal section and the distal section may be coupled to the distal section of the sensor body. In some embodiments, the intermediate section is a longitudinal member. The proximal end may be proximate to the gap defined between the distal member and the intermediate member.

In some embodiments, the proximal end is received within a needle seat to create an anchor region to allow the sensor body to slide into an opening defined in the insertion sharp but prevent the sensor body from inadvertently slipping out of the insertion needle. In some embodiments, a width of the distal section of the sensor body is sized to fit within the opening of the insertion sharp having a diameter less than about 22 to about 24 gauge.

In some embodiments, the intermediate member includes a plane-altering portion. The plane-altering portion allows

the proximal section of the sensor body to be in a plane different than the distal section of the sensor body. In some embodiments, the proximal section and the distal section are in planes substantially perpendicular to each other, e.g., the area may define an angle of about 120° to about 60°, e.g., about 90 degrees.

In some embodiments, the proximal section has a curved portion.

In some embodiments, the sensor body includes conductive material disposed in or on a surface thereto to define one or more electrodes. The sensor body may include conductive material defining traces disposed in or on a surface of the sensor body. The traces are in communication with the one or more electrodes. The traces may be disposed in or on at least surface of the proximal section of the sensor body. The one or more electrodes may be disposed on the distal section of the sensor body. At least one of the traces or electrodes may include a metal or carbon material such as gold, platinum, titanium, carbon. At least one of the traces or electrodes may be formed by ablation of material. The ablation may include laser ablation.

In some embodiments, the sensor comprises a sensing layer. The sensing layer may comprise an enzyme. The sensing layer may comprise an electron transfer agent. The electron transfer agent may be a redox mediator. In some embodiments, the electron transfer agent includes osmium transition metal complexes and one or more ligands. The electron transfer agent may be configured to transfer electrons directly between the analyte and the working electrode. The electron transfer agent may be configured to transfer electrons indirectly between the analyte and the working electrode.

In some embodiments, the sensing layer comprises a redox polymer. The redox polymer may include osmium. The sensing layer may include a catalyst. The catalyst may include an enzyme. The catalyst may act as an electron transfer agent. In some embodiments, the enzyme includes glucose oxidase. In some embodiments, the enzyme includes glucose dehydrogenase.

In some embodiments, the sensing layer is configured such that the reaction of glucose in the presence of an enzyme forms hydrogen peroxide, and glucose level may be correlated to the level of hydrogen peroxide. In some embodiments, the sensor is a subcutaneous sensor.

These and other features, objects and advantages of the disclosed subject matter will become apparent to those persons skilled in the art upon reading the detailed description as more fully described below.

BRIEF DESCRIPTION OF THE DRAWINGS

A detailed description of various aspects, features, and embodiments of the subject matter described herein is provided with reference to the accompanying drawings, which are briefly described below. The drawings are illustrative and are not necessarily drawn to scale, with some components and features being exaggerated for clarity. The drawings illustrate various aspects and features of the present subject matter and may illustrate one or more embodiment(s) or example(s) of the present subject matter in whole or in part.

FIG. **1** is a schematic view of the system in accordance with one embodiment of the disclosed subject matter;

FIG. **2** is a view, in partial cross section, of an electrochemical sensor in accordance with one embodiment of the disclosed subject matter;

FIG. **3** is a view of an electrochemical sensor in accordance with another embodiment of the disclosed subject matter;

FIG. **4** is a view of the electrochemical sensor of FIG. **3** in a folded configuration in accordance with the disclosed subject matter;

FIG. **5** is a view of an electrochemical sensor in accordance with a further embodiment of the disclosed subject matter;

FIG. **6** is a view of the electrochemical sensor of FIG. **5** in a folded configuration in accordance with the disclosed subject matter;

FIG. **7** is a perspective view of an on-body unit in accordance with one embodiment of the disclosed subject matter;

FIG. **8** is a perspective view in partial cross-section of an on-body unit of FIG. **7** in accordance with the disclosed subject matter;

FIG. **9** is a schematic view of the system in accordance with one embodiment of the disclosed subject matter;

FIG. **10** is a sectional, perspective view of another embodiment of an inserter in accordance with the disclosed subject matter;

FIGS. **11-12** are perspective views of components of the inserter of FIG. **10** in accordance with the disclosed subject matter;

FIG. **13** is a sectional view of a component of the inserter of FIG. **10** in accordance with the disclosed subject matter;

FIGS. **14-15** are a perspective views of components of the inserter of FIG. **10** in accordance with the disclosed subject matter;

FIG. **16** is a sectional view of the component of FIG. **14** in accordance with the disclosed subject matter;

FIGS. **17-18** are schematic views of a needle hub in accordance with one embodiment of the disclosed subject matter;

FIG. **19** is a distal end view of a sharp in accordance with one embodiment of the disclosed subject matter;

FIG. **20** is a side view of a sharp in accordance with one embodiment of the disclosed subject matter;

FIG. **21** is a side view of a sharp in accordance with one embodiment of the disclosed subject matter;

FIG. **22** is a perspective view with parts of an inserter in accordance with one embodiment of the disclosed subject matter;

FIG. **23** is a perspective view with parts separated of an inserter in accordance with one embodiment of the disclosed subject matter;

FIG. **24** is an enlarged sectional view with parts separated of an inserter in accordance with one embodiment of the disclosed subject matter;

FIGS. **25-27** are perspective views of components of the inserter of FIG. **10** in accordance with the disclosed subject matter;

FIGS. **28-31** are sectional views of the inserter of FIG. **10** in accordance with the disclosed subject matter;

FIGS. **32-33** illustrate a power supply switch mechanism including conductive plug of the on-body integrated sensor and sensor electronics assembly in accordance with embodiments of the disclosed subject matter;

FIGS. **34A-36B** illustrate a power supply switch mechanism including conductive pads on the on-body integrated sensor and sensor electronics assembly in accordance with embodiments of the disclosed subject matter;

FIG. **37** illustrates a power supply switch mechanism including an internal switch with a push rod activation of the

on-body integrated sensor and sensor electronics assembly in accordance with embodiments of the disclosed subject matter;

FIG. **38** illustrates power supply switch mechanism including introducer retraction trigger activation of the on-body integrated sensor and sensor electronics assembly in accordance with embodiments of the disclosed subject matter;

FIG. **39** illustrates a power supply switch mechanism with a contact switch of the on-body integrated sensor and sensor electronics assembly in accordance with embodiments of the disclosed subject matter;

FIGS. **40-41** illustrate a power supply switch mechanism with a battery contact locking mechanism of the on-body integrated sensor and sensor electronics assembly in accordance with embodiments of the disclosed subject matter;

FIGS. **42-43** illustrate a power supply switch mechanism with a bi-modal dome switch of the on-body integrated sensor and sensor electronics assembly in accordance with embodiments of the disclosed subject matter.

DETAILED DESCRIPTION OF THE EMBODIMENTS

A detailed description of the disclosure is provided herein. It should be understood, in connection with the following description, that the subject matter is not limited to particular embodiments described, as the particular embodiments of the subject matter may of course vary. It is also to be understood that the terminology used herein is for the purpose of describing particular embodiments only, and is not intended to be limiting, since the scope of the disclosed subject matter will be limited only by the appended claims.

Where a range of values is provided, it is understood that each intervening value between the upper and lower limit of that range and any other stated or intervening value in that stated range, is encompassed within the disclosed subject matter. Every range stated is also intended to specifically disclose each and every "subrange" of the stated range. That is, each and every range smaller than the outside range specified by the outside upper and outside lower limits given for a range, whose upper and lower limits are within the range from said outside lower limit to said outside upper limit (unless the context clearly dictates otherwise), is also to be understood as encompassed within the disclosed subject matter, subject to any specifically excluded range or limit within the stated range. Where a range is stated by specifying one or both of an upper and lower limit, ranges excluding either or both of those stated limits, or including one or both of them, are also encompassed within the disclosed subject matter, regardless of whether or not words such as "from", "to", "through", or "including" are or are not used in describing the range.

Unless defined otherwise, all technical and scientific terms used herein have the same meaning as commonly understood by one of ordinary skill in the art to which this disclosed subject matter belongs. Although any methods and materials similar or equivalent to those described herein can also be used in the practice or testing of the present disclosed subject matter, this disclosure may specifically mention certain exemplary methods and materials.

All publications mentioned in this disclosure are, unless otherwise specified, incorporated herein by reference for all purposes, including without limitation to disclose and describe the methods and/or materials in connection with which the publications are cited.

The publications discussed herein are provided solely for their disclosure prior to the filing date of the present application. Nothing herein is to be construed as an admission that the present disclosed subject matter is not entitled to antedate such publication by virtue of prior invention. Further, the dates of publication provided may be different from the actual publication dates, which may need to be independently confirmed.

As used herein and in the appended claims, the singular forms "a", "an", and "the" include plural referents unless the context clearly dictates otherwise.

Nothing contained in the Abstract or the Summary should be understood as limiting the scope of the disclosure. The Abstract and the Summary are provided for bibliographic and convenience purposes and due to their formats and purposes should not be considered comprehensive.

As will be apparent to those of skill in the art upon reading this disclosure, each of the individual embodiments described and illustrated herein has discrete components and features which may be readily separated from or combined with the features of any of the other several embodiments without departing from the scope or spirit of the present disclosed subject matter. Any recited method can be carried out in the order of events recited, or in any other order which is logically possible. Reference to a singular item, includes the possibility that there are plural of the same item present. When two or more items (for example, elements or processes) are referenced by an alternative "or", this indicates that either could be present separately or any combination of them could be present together except where the presence of one necessarily excludes the other or others.

System Overview

Certain classes of analyte monitors are provided in small, lightweight, battery-powered and electronically-controlled systems. Such a system may be configured to detect signals indicative of in vivo analyte levels using an electrochemical sensor, and collect such signals, with or without processing the signal. In some embodiments, the portion of the system that performs this initial processing may be configured to provide the raw or initially processed data to another unit for further collection and/or processing. Such provision of data may be effected, for example, via a wired connection, such as an electrical, or via a wireless connection, such as an IR or RF connection.

Certain analyte monitoring systems for in vivo measurement employ a sensor that measures analyte levels in interstitial fluids under the surface of the subject's skin. These may be inserted partially through the skin ("transcutaneous") or entirely under the skin ("subcutaneous"). A sensor in such a system may operate as an electrochemical cell. Such a sensor may use any of a variety of electrode configurations, such as a three-electrode configuration (e.g., with "working", "reference" and "counter" electrodes), driven by a controlled potential (potentiostat) analog circuit, a two-electrode system configuration (e.g., with only working and counter electrodes), which may be self-biasing and/or self-powered, and/or other configurations. In some embodiments, the sensor may be positioned within a blood vessel.

In certain systems, the analyte sensor is in communication with a sensor control unit. As used in this disclosure, an on-body unit sometimes refers to such a combination of an analyte sensor with such a sensor control unit.

Certain embodiments are modular. The on-body unit may be separately provided as a physically distinct assembly, and configured to provide the analyte levels detected by the sensor over a communication link to a monitor unit, referred

to in this disclosure as a "receiver unit" or "receiver device", or in some contexts, depending on the usage, as a "display unit," "handheld unit," or "meter". The monitor unit, in some embodiments, may include, e.g., a mobile telephone device, a personal digital assistant, other consumer electronic device such as MP3 device, camera, radio, etc., or other communication-enabled data processing device.

The monitor unit may perform data processing and/or analysis, etc. on the received analyte data to generate information pertaining to the monitored analyte levels. The monitor unit may incorporate a display screen, which can be used, for example, to display measured analyte levels, and/or audio component such as a speaker to audibly provide information to a user, and/or a vibration device to provide tactile feedback to a user. It is also useful for a user of an analyte monitor to be able to see trend indications (including the magnitude and direction of any ongoing trend), and such data may be displayed as well, either numerically, or by a visual indicator, such as an arrow that may vary in visual attributes, such as size, shape, color, animation, or direction. The receiver device may further incorporate an in vitro analyte test strip port and related electronics in order to be able to make discrete (e.g., blood glucose) measurements.

The modularity of these systems may vary. In some embodiments the sensor is attachable and detachable from the sensor control unit (and the on-body unit may be reusable), while in other embodiments, the sensor and sensor control unit may be provided as an integrated, un-detachable package, which may be disposable after use.

FIG. **1** shows one embodiment of an analyte measurement system **10**. In such a system, a data processing unit or sensor control unit **12** may interact with an analyte sensor **14** to obtain signals representative of analyte levels. Sensor control unit **12** may further include communications circuit with associated electronics (not shown). In some embodiments, the sensor control unit **12** and sensor are constructed to be maintained "on the body" of the subject for a period of time that may include hours, days, weeks, or a month or more. Accordingly, the sensor control unit **12** and sensor **14** may be referred to collectively herein as an on-body unit **16**. A receiver unit or monitor unit **18** may also be provided. In the embodiment shown, sensor control unit **12** and monitor unit **18** communicate via connection **20** (in this embodiment, a wireless RF connection). Communication may occur, e.g., via RF communication, infrared communication, Bluetooth® communication, Zigbee® communication, 802.1x communication, or WiFi communication, etc. In some embodiments, the communication may include an RF frequency of 433 MHz, 13.56 MHz, or the like. In some embodiments, a secondary monitor unit **22** may be provided. A data processing terminal **24** is useful for providing further processing or review of analyte data.

In certain embodiments, system **10** may be a continuous analyte monitor (e.g., a continuous glucose monitoring system or CGM), and accordingly operate in a mode in which the communications via connection **20** has sufficient range to support a flow of data from on-body unit **16** to monitor unit **18**. In some embodiments, the data flow in a CGM system is automatically provided by the on-body unit **16** to the monitor unit **18**. For example, no user intervention may be required for the on-body unit **16** to send the data to the monitor unit **18**. In some embodiments, the on-body unit **16** provides the signal relating to analyte level to the receiving unit **18** on a periodic basis. For example, the signal may be provided, e.g., automatically sent, on a fixed schedule, e.g., once every 250 ms, once a second, once a minute, etc. In some embodiments, the signal is provided to the monitor unit **18** upon the occurrence of an event, e.g., a hyperglycemic event or a hypoglycemic event, etc. In some embodiments, data processing unit **12** may further include local memory in which it may record, "logged data" or buffered data collected over a period of time and provide the some or all of the accumulated data to monitor unit **18** from time-to-time. Or, a separate data logging unit may be provided to acquire periodically transmitted data from a transmitter device. Data transmission in a CGM system may be one-way communication, e.g., the on-body unit **16** provides data to the monitor unit **18** without receiving signals from the monitor unit **18**. In some embodiments, two-way communication is provided between the on-body unit **16** and the monitor unit **18**.

In some embodiments, a signal is provided to the monitor unit **18** "on demand." According to such embodiments, the monitor unit **18** requests a signal from the on-body unit **16**, or the on-body unit **16** may be activated to send signal upon activation to do so. Accordingly, one or both of the on-body unit **16** and monitor unit **18** may include a switch activatable by a user or activated upon some other action or event, the activation of which causes analyte-related signal to be transferred from the on-body unit **16** to the monitor unit **18**. For example, the monitor unit **18** is placed in close proximity with a transmitter device and initiates a data transfer, either over a wired connection, or wirelessly by various means, including, for example various RF-carried encodings and protocols and IR links.

In some embodiments, the signal relating to analyte level is instantaneously generated by the analyte sensor **14** upon receipt of the request, and transmitted to the monitor unit **18** as requested, and/or the signal relating to analyte level is periodically obtained, e.g., once every 250 ms, once a second, once a minute, etc. Upon receipt of the "on demand" request at the on-body unit **16**, an analyte signal is provided to the monitor unit. In some cases, the signal provided to the monitor unit **18** is or at least includes the most recent analyte signal(s).

In further embodiments, additional data is provided to the monitor unit **18** "on demand." For example, analyte trend data may be provided. Such trend data may include two or more analyte data points to indicate that analyte levels are rising, falling, or stable. Analyte trend data may include data from longer periods of time, such as, e.g., several minutes, several hours, several days, or several weeks.

Further details regarding on demand systems are disclosed in U.S. Pat. No. 7,620,438, U.S. Patent Publication Nos. 2009/0054749 A1, published Feb. 26, 2009; 2007/0149873 A1, published Jun. 28, 2007, now U.S. Pat. No. 9,014,773; 2008/0064937 A1, published Mar. 13, 2008; 2008/0071157 A1, published Mar. 20, 2008; 2008/0071158 A1, published Mar. 20, 2008; 2009/0281406 A1, published Nov. 12, 2009; 2008/0058625 A1, published Mar. 6, 2008, now U.S. Pat. No. 7,920,907; 2009/0294277 A1, published Dec. 3, 2009; 2008/0319295 A1, published Dec. 25, 2008, now U.S. Pat. No. 8,597,188; 2008/0319296 A1, published Dec. 25, 2008, now U.S. Pat. No. 8,617,069; 2009/0257911 A1, published Oct. 15, 2009, now U.S. Pat. No. 8,252,229; 2008/0179187 A1, published Jul. 31, 2008, now U.S. Pat. No. 8,808,515; 2007/0149875 A1, published Jun. 28, 2007, now U.S. Pat. No. 8,515,518; 2009/0018425 A1, published Jan. 15, 2009, now U.S. Pat. No. 8,160,670; and U.S. patent application Ser. No. 12/625,524, filed Nov. 24, 2009, now U.S. Pat. No. 8,390,455; Ser. No. 12/625,525, filed Nov. 24, 2009, now U.S. Pat. No. 8,358,210; Ser. No. 12/625,528, filed Nov. 24, 2009, now U.S. Pat. No. 8,115,635; Ser. No.

12/628,201, filed Nov. 30, 2009, now U.S. Patent Publication No. 2010/0076280; Ser. No. 12/628,177, filed Nov. 30, 2009, now U.S. Patent Publication No. 2010/0076289; Ser. No. 12/628,198, filed Nov. 30, 2009, now U.S. Patent Publication No. 2010/0076291; Ser. No. 12/628,203, filed Nov. 30, 2009, now U.S. Patent Publication No. 2010/0076292; Ser. No. 12/628,210, filed Nov. 30, 2009, now U.S. Patent Publication No. 2010/0076293; Ser. No. 12/393,921, filed Feb. 26, 2009, now U.S. Patent Publication No. 2010/0213057; 61/149,639, filed Feb. 3, 2009; Ser. No. 12/495,709, filed Jun. 30, 2009, now U.S. Patent Publication No. 2010/0326842; 61/155,889, filed Feb. 26, 2009; 61/155,891, filed Feb. 26, 2009; 61/155,893, filed Feb. 26, 2009; 61/165,499, filed Mar. 31, 2009; 61/227,967, filed Jul. 23, 2009; 61/163,006, filed Mar. 23, 2009; Ser. No. 12/495,730, filed Jun. 30, 2009, now U.S. Patent Publication No. 2010/0331643; Ser. No. 12/495,712, filed Jun. 30, 2009, now U.S. Pat. No. 8,437,827; 61/238,461, filed Aug. 31, 2009; 61/256,925, filed Oct. 30, 2009; 61/238,494, filed Aug. 31, 2009; 61/238,159, filed Aug. 29, 2009; 61/238,483, filed Aug. 31, 2009; 61/238,581, filed Aug. 31, 2009; 61/247,508, filed Sep. 30, 2009; 61/247,516, filed Sep. 30, 2009; 61/247,514, filed Sep. 30, 2009; 61/247,519, filed Sep. 30, 2009; 61/249,535, filed Oct. 7, 2009; Ser. No. 12/544,061, filed Aug. 19, 2009, now U.S. Patent Publication No. 2011/0046466; Ser. No. 12/625,185, filed Nov. 24, 2009, now U.S. Pat. No. 8,354,013; Ser. No. 12/625,208, filed Nov. 24, 2009, now U.S. Pat. No. 9,042,954; Ser. No. 12/624,767, filed Nov. 24, 2009, now U.S. Patent Publication No. 2011/0124993; Ser. No. 12/242,780, filed Sep. 30, 2008, now U.S. Pat. No. 8,983,568; Ser. No. 12/183,602, filed Jul. 31, 2008, now U.S. Patent Publication No. 2010/0030052; Ser. No. 12/211,014, filed Sep. 15, 2008, now U.S. Pat. No. 8,636,884; and Ser. No. 12/114,359, filed May 2, 2008, now U.S. Pat. No. 8,080,385, each of which is incorporated by reference in its entirety herein.

The Sensor

The analyte sensor **14** of the analyte measurement system **10** may be used to monitor levels of a wide variety of analytes. Analytes that may be monitored include, for example, acetyl choline, amylase, bilirubin, cholesterol, chorionic gonadotropin, creatine kinase (e.g., CK-MB), creatine, DNA, fructosamine, glucose, glutamine, growth hormones, hormones, ketones, lactate, peroxide, prostate-specific antigen, prothrombin, RNA, thyroid stimulating hormone, and troponin. The concentration of drugs, such as, for example, antibiotics (e.g., gentamicin, vancomycin, and the like), digitoxin, digoxin, drugs of abuse, theophylline, and warfarin, may also be monitored. One or more analyte may be monitored by a given sensor.

In one embodiment of the present disclosure, sensor **14** is physically positioned in or on the body of a user whose analyte level is being monitored. Sensor **14** may be configured to continuously sample the analyte level of the user and convert the sampled analyte level, e.g., glucose concentration into a corresponding data signal, e.g., a current or voltage, for input into sensor control unit electronics. Alternatively, sensor **14** may be configured to sample analyte levels on demand. The sensor control unit electronics may amplify, filter, or otherwise process the signal provided by the sensor.

The sensor may take on a number of forms. For example, the sensor may include a flexible or rigid substrate. In some embodiments, the sensor may be a wire. In some embodiments, the sensor may include two or three or more electrodes.

An embodiment of the sensor **14** is illustrated in FIG. **2**. In some embodiments, sensor **14** includes a substrate which is a dielectric, e.g., a polymer or plastic material, such as polyester or polyamide. In this embodiment, the sensor is constructed so that a portion is positionable beneath skin and a portion is above skin. Accordingly, sensor **14** includes an insertion portion **30** and a contact portion **32**. The contact portion **32** typically includes several conductive contacts **36**, **38**, and **40** (herein shown as 3 contacts) for connection to other electronics, e.g., at the data processing unit **12**. The contacts provided in this embodiment are for a working electrode **36**, a reference electrode **38**, and a counter electrode **40**. In some embodiments, two or more working electrodes are provided. The operative portions of these electrodes, that is, working electrode, reference electrode, and counter electrode (not individually shown), are provided at the distal end of insertion portion **30**. The contact and operative portions of the electrodes are connected by circuit traces **42**, **44**, and **46** running on the surface of substrate. In some embodiments, the traces are provided in channels, or may be embedded within the substrate, or may traverse different sides of the substrate. The conductive contacts, conductive traces, and electrodes are fabricated from a conductive material, such as platinum, palladium, gold, or conductive carbon. Further details of sensors are described, e.g., in U.S. Pat. Nos. 6,175,572; 6,103,033, which are incorporated by reference herein.

Sensor **14** may include a proximal retention portion **48**. In some embodiments, the insertion portion **30** and the proximal retention portion **48** are substantially longitudinally aligned. The insertion portion **30** and the proximal retention portion **48** are sized and configured to be positioned with a sharp for installation into the skin of a subject, as described herein. In use, the sensor **14** may be configured to bend (e.g., along the line B) and therefore be positioned in two substantially perpendicular, intersecting planes.

As illustrated in FIG. **3**, sensor **14'** is substantially identical to sensor **14**, with many of the differences illustrated in FIG. **3** and noted herein. Sensor **14'** further includes additional features useful for connecting to, e.g., mounting to or in or on, a housing associated with the sensor control unit **12**. For example, sensor **14'** includes a laterally displaced portion (or sensor tab) **50'** and a longitudinal displaced portion **52'** which provide a path for electrical connections, e.g., the conductive traces. Sensor **14'** is further provided with a notch **54'** between the proximal retention portion **48'** and the longitudinal displaced portion **52'**. Such configuration permits the sensor **14'** to bend (e.g., along the line are indicated by line B) and therefore be positioned in two substantially perpendicular, intersecting planes, as illustrated in FIG. **4**. As will be described below, the sensor tab **50'** can be encased in a portion of the body of the data processing unit **12** to aid in securing and positioning the sensor **14'**. Proximal retention portion **48'** maintains its longitudinal alignment with insertion portion **30'** for positioning within an insertion sharp.

FIG. **5** illustrates a further embodiment of a sensor **14"** in accordance with the disclosure. Sensor **14"** is substantially identical to sensor **14** and **14'**, with certain exemplary differences illustrated in FIG. **5** and noted herein. For example, sensor **14"** includes a contact portion **32"** which defines a fan-like configuration having a curved edge. Sensor **14"** defines a sensor flag indentation **56"** which also serves to assist in retaining the sensor **14"** in vertical direction, as will be described below, and provides a discrete location for mating with a feature of the data processing unit **12**, e.g., the bottom surface of a printed circuit board. Sensor

14" is likewise capable of bending along axis B, as illustrated in FIG. **6**. In any of the embodiments of the sensor described herein, the distance between insertion portion **30** to retention portion **48** may be, e.g., about 5 mm, or about 10 mm, or about 15 mm, or about 20 mm.

In general, sensors in accordance with the present disclosure operate electrochemically, through an arrangement of electrodes having chemical sensing layers applied thereto, by generating an electrical current proportional to the volume of a redox reaction of the analyte (and indicative of analyte concentration), catalyzed by an analyte-specific oxidizing enzyme. Embodiments exist in which the number of electrodes provided to bring about and detect the level of these reactions is two, three or a greater number.

A portion of sensor **14** (which collectively refers to sensors **14'** and **14"** herein) may be situated above the surface of the skin, with a distal portion **30** penetrating through the skin and into the subcutaneous space in contact with the user's biofluid, such as interstitial fluid. The disposition of the sensor in the illustrated embodiment is referred to as "transcutaneous". In general, the term "transcutaneous" as used herein refers to a sensor that is only partially inserted under one or more layers of the skin of the user, whereas the term "subcutaneous" refers to a sensor that is completely inserted under one or more layers of the skin of the user. It is understood that many features described herein would be applicable to both transcutaneous and subcutaneous sensors. Further details regarding the electrochemistry of sensor **14** is provided in U.S. Pat. Nos. 5,264,104; 5,356,786; 5,262,035, 5,320,725, 6,990,366, each of which is incorporated herein by reference

In some embodiments, the sensor is implantable into a subject's body for a period of time (e.g., three to seven days, or in some embodiments, longer periods of up to several weeks) to contact and monitor an analyte present in a biological fluid. In this regard, the sensor can be disposed in a subject at a variety of sites (e.g., abdomen, upper arm, thigh, etc.), including intramuscularly, transcutaneously, intravascularly, or in a body cavity. In one embodiment, the sensor can be a transcutaneous glucose sensor. Alternatively, the sensor can be a subcutaneous glucose sensor.

In some embodiments, sensor **14** is employed by insertion and/or implantation into a user's body for some usage period. In such embodiments, substrate may be formed from a relatively flexible material to improve comfort for the user and reduce damage to the surrounding tissue of the insertion site, e.g., by reducing relative movement of the sensor with respect to the surrounding tissue.

While the embodiments illustrated in FIGS. **2-6** have three electrodes, other embodiments can include a fewer or greater number of electrodes. For example, a two electrode sensor can be utilized. The sensor may be externally-powered and allow a current to pass proportional to the amount of analyte present. Alternatively, the sensor itself may act as a current source in some embodiments. In some two-electrode embodiments, the sensor may be self-biasing and there may be no need for a reference electrode. An exemplary self-powered, two-electrode sensor is described in U.S. patent application Ser. No. 12/393,921, filed Feb. 26, 2009, and entitled "Self-Powered Analyte Sensor," which is hereby incorporated by reference in its entirety herein for all purposes. The level of current provided by a self-powered sensor may be low, for example, on the order of nanoamperes.

On-Body Unit

An exemplary configuration for sensor **14** (and sensors **14'** and **14"**) and sensor control unit **12** (e.g., collectively on-body unit **16**) is illustrated in FIGS. **7-8**. Data processing unit **12**, may be provided with a substantially circular configuration having a reduced height (i.e., "Z"-dimension) to provide a low-profile when sitting on the skin of the subject. In some embodiments, the height is about 3 mm to about 25 mm, e.g., may be about 4 mm, about 5 mm, about 10 mm, or about 15 mm. In certain embodiments, the unit **12** may have a variable height. Data processing unit **12**, including its associated electronics **80**, are housed in a sensor housing **122**. For example, electronics may include, e.g., an analog interface for connecting to the sensor **14**, a processor, and a power supply. A serial communication section may be provided. A temperature sensor, such as a thermistor, which detects skin and or ambient temperature may be included to provide compensation to the analyte signal. A RF communication circuit is provided to communicate with the monitor unit **18**. A data storage unit may be provided to store analyte data points over a short term, e.g., several hours or minutes, or over a long term, e.g., several days or weeks. Additional optional electronics include a serial communication section, a leakage detection circuit, or user input, e.g., a switch to activate/deactivate some or all of the device. Many of the components may be combined together and/or their function provided by common components. Furthermore, certain components may be eliminated entirely. For example, a power supply may be omitted if power is provided by inductive coupling.

In some embodiments, sensor **14** is disposed within the data transmitting unit **12**, e.g., in a bent configuration, as illustrated in certain embodiments herein, e.g., in FIGS. **4** and **6**. The contact portion **32** of sensor **14** may be oriented in a substantially horizontal configuration, and secured to a printed circuit board of the transmitter unit **12**. The insertion portion **30** of the sensor **14** extends in a substantially downwardly vertical orientation for placement in the skin of the subject. It is understood that sensor **14** may be disposed in other configurations, e.g., in an entirely substantially vertical configuration, etc. As a further example, the insertion portion **30** may be disposed at an oblique angle, e.g., between about 0° and about 90° with respect to the skin surface.

As illustrated in FIG. **9**, the on-body unit **16** communicates with the monitor unit **18**. Such communication may be one-way communication, e.g., from the on-body unit **16** to the monitor unit **18**. In some embodiments, the communication may be two-way, e.g., both from the on-body unit **16** to the receiving unit **18** and from the receiving unit **18** to the on-body unit **16**. In such cases, the receiving unit **18** may also be referred to herein as a display unit, transceiver or handheld unit. Communication between the on-body unit **16** and monitor unit **18** may occur via RF communication, inductive coupling, direct wired connection, etc.

Insertion Assembly

An insertion assembly is provided, which is used to install a medical device to the subject. In some embodiments, the insertion assembly includes an inserter and the medical device itself. The inserter can be configured to insert various medical devices to the subject, such as for example, an analyte sensor, an infusion set, a cannula, or a lancet. In some embodiments, the inserter can be configured to install a combination of such devices, e.g., a combined sensor/infusion set, etc. In certain embodiments, a given inserter can be configured to install a first device and a second device at different times. For example, an inserter may be modifiable to be used with more than one medical device, include more than one type of medical device, e.g., by attaching an adapter and/or removing detaching a portion of an inserter.

The inserter can install the medical device transcutaneously in, under, or through the skin of the subject; or subcutaneously; or placed on the surface of the skin. The medical device can include features or structures, e.g., barbs, tabs, adhesive, etc., to maintain the device in position with respect to the skin after insertion.

In other embodiments, the insertion assembly includes an inserter, a medical device, such as an analyte sensor, and a mount for supporting the medical device at least partially in or on the skin of the subject. The mount may be inserted simultaneously with the medical device by the inserter. In other embodiments, the mount is installed after or before installation of the medical device. In such case the mount may be applied by the inserter or separately. The mount may include features or structures to maintain the sensor in position with respect to the skin after insertion.

In further embodiments, the insertion assembly includes an inserter, an analyte sensor, a mount, and a power supply. The mount and power supply may be inserted simultaneously with the analyte sensor by the inserter. In other embodiments, the mount and battery are installed after or before installation of the analyte sensor. In such case the mount and/or power supply may be applied by the inserter or separately.

In still further embodiments, the insertion assembly includes an inserter, a medical device such as an analyte sensor, a mount, and electronics. The mount and electronics may be inserted simultaneously with the analyte sensor by the inserter. In other embodiments, the mount and electronics are installed after or before installation of the analyte sensor. For example, the mount and the analyte sensor may be installed by the inserter, and the electronics may be subsequently installed. In other embodiments, the mount is installed, followed by insertion of the analyte sensor by the inserter, and further followed by installation of the electronics. In other embodiments, the mount and electronics are installed first, and the analyte sensor is subsequently installed.

In some embodiments, the electronics provide a voltage or current to the analyte sensor. In some embodiments, the electronics processes signals provided by the analyte sensor. In further embodiments, the electronics may include communication functionality for providing a signal relating to the signal provided by the analyte sensor to a further component, such as, e.g., a monitor unit, a handheld unit, a meter, a display unit, a computer, or other component. In some embodiments, communications circuitry, such as RFID antenna or communications circuitry is provided.

The inserter can include a plurality of different components. For example, the inserter may include one or more components for advancing a sharp towards the skin of the subject. The sensor and associated electronics and/or mounting structure may be supported by a support structure, such as a carriage. An actuator may be provided for advancing the sharp and/or the analyte sensor/support structure. In some embodiments, the actuator is coupled to the sharp and/or support structure, such that manual force and speed applied by the user to the actuator is transferred to the sharp and/or support structure.

The inserter can also include one or more components for retracting the sharp, while allowing the analyte sensor and optional mount and/or electronics to remain to the subject. The components for retracting the sharp can include a retractor. It is understood that the retractor and the actuator may be the same structure or include some common components. In some embodiments, the retractor is directly or indirectly coupled to the sharp such that the manual force applied by the user is transferred from the retractor to the sharp to retract the sharp from the skin. In other embodiments, a drive assembly may be provided to retract the sharp. For example, the drive assembly may include a spring, motor, hydraulic piston, etc., to retract the sharp away from the skin of the subject. The drive assembly may also include a linear drive component.

In some embodiments, the retractor withdraws the sharp upon actuation by the user. In such cases, the user actuates the retractor when it is desired to withdraw the sharp. For example, the retractor may include a release switch. Upon activation of the release switch, the drive assembly, e.g., the spring or other driver, retracts the sharp from the skin. In other embodiments, the retractor and the actuator comprise common components. After activating the actuator to advance the sharp and the analyte sensor, the user releases the actuator, which allows the drive assembly to withdraw the sharp from the skin.

In some embodiments, the retractor withdraws the sharp without further user interaction after actuation of insertion. For example, the inserter may include features or components which automatically retract the sharp upon advancement of the sharp and support structure by a predetermined amount. Inserter devices, in which no further action by the user is required to initiate withdrawal of the sharp after insertion, are referred to herein as having "automatic" withdrawal of the sharp.

Inserter Devices

An inserter **100** in accordance with an exemplary embodiment is illustrated in FIG. **10**. Inserter **100** includes a handle **102** and a removable distal cap **104**. The cap **104** may maintain a sterile, contaminant-free environment for the medical device and sharp housed therein. As illustrated in FIGS. **10-16**, distal cap **104** is secured to handle **102**, e.g., by use of one or more mating members, e.g., threads **110** and **111**, or hooks, tape, and the like. Inserter **100** includes a base **142** which defines a distal, substantially planar surface **112** for placement on the skin S of a subject, and in other embodiments may be a curved or inclined surface, e.g., a concave or convex surface. Inserter **100** may be utilized to advance a medical device into the skin of the subject, e.g., an analyte sensor, and infusion set, etc. In some embodiments, handle **102** is advanced relative to base **142** in order to advance the medical device into the skin of the patient, as will be described in greater detail herein.

The components of inserter **100** are illustrated in FIGS. **11-27**. As illustrated in FIG. **11**, handle **102** includes a contact surface **114** for contact by a user to insert and install the sensor housing **122** and sensor **14**. Threads **110** are provided on handle **102** for attachment to cap **104** via threads **111** (as illustrated in FIGS. **12-13**). Cap **104** can include an upwardly extending boss **125** to assist positioning of the sharp **124**. The distal portion of cap **104** includes a recess **115** for retaining a desiccant **190** therein. In some embodiments, a silica gel or molecular sieves may be used. Such material can be in either in granular form (pellets) or pressed into tablets. In some embodiments, silica gel tablets are used.

Cap **104** is provided with one or more apertures **117**, which allows for passage of air to the desiccant **190** to remove moisture from the interior of the inserter **100**. Cap **104** includes an annular ridge **113** which engages the distal edge portion **116** of handle **102**. In some embodiments, annular ridge **113** prevents distal movement of handle **102** (as well as sharp **124**) when cap **104** is attached to handle **102**.

Base **142**, as illustrated in FIGS. **10** and **14**, includes a distal sheath portion **192**, which shields sharp **124** prior to deployment and a distal rim **112** having a substantially planar surface configuration to rest on the subject's skin. Base **142** also includes side walls **191**, which along with inner rail **128** defines a recess for retraction spring **146**. Base **142** provides a spring floor **148**, as illustrated in FIG. **29**.

Support member or shuttle **134**, as illustrated in FIGS. **15-16**, supports needle hub **136**, from which sharp **124** extends longitudinally within the inserter **100**. In some embodiments, the sharp is supported at an oblique angle, e.g., between about 0° and about 90° with respect to the skin surface. Needle hub **136** can be secured to shuttle **134** via an interlocking O-ring configuration, adhesive, or other techniques known in the art. In some embodiments, sharp **124** is a solid needle. In some embodiments, sharp **124** is provided with a substantially cylindrical configuration defining an interior bore, e.g., a rigid cannula or a hypodermic-style needle.

Needle hub **136** is further illustrated in FIGS. **17-18**. Needle hub **136** supports sharp **124**, having a sharpened distal portion **160**. In some embodiments, as discussed herein, a longitudinal wall opening or gap **162** is provided in at least a portion of the wall of the sharp **124**. The length N of the gap **162** is selected to be commensurate with the length of the insertion portion **30** through to the proximal retention portion **48** of the sensor, or about 5 mm, or about 10 mm, or about 15 mm, or about 20 mm. The length L of the sharp **124** may be about 5 mm, or about 10 mm, or about 20 mm, about 30 mm, or about 50 mm, and is selected based upon the desired depth of the insertion portion **30** of the sensor **14**.

The distal portion **160** of sharp **124** is illustrated in greater detail in FIGS. **19-21**. As illustrated in FIG. **19**, sharp **124** has a substantially "C"- or "U"-shaped profile in this embodiment, but may have other configurations, e.g., substantially "V"-shaped. A longitudinal gap **162** is provided in the wall of the sharp **124**. FIG. **20** illustrates distal portion **160** is provided with an angled tip. In some embodiments, the angled tip may be provided with a first angled tip portion **164** and a second steep-angled tip portion **166**. The exemplary configuration, which includes multiple edges and faces, provides a sharp point to reduce penetration force, trauma, and bleeding for the subject. The distal section of the sensor body has a width sized to fit within the notch **162** of the insertion sharp **124** having a diameter less than about 22 to about 24 gauge, in certain embodiments the sharp is 25 gauge. In some embodiments, sharp **124** is a fabricated from a sheet of metal, and folded into a substantially "V" or "U" or "C" configuration in cross-section. In some embodiments, a laser is used to form the wall opening or gap **162**.

FIGS. **22-23** illustrate the position of sensor housing **122** with respect to the needle hub **136** and sharp **124**. As illustrated in FIG. **22**, the sharp **124** extends through an aperture **168** in the sensor housing **122**. The distal portion of sensor **14** is positioned with the sharp **124**. As further illustrated in FIG. **23**, electronics **80** (e.g., a printed circuit board containing ASIC electronics) and sensor hub **123** are positioned within sensor housing **122**. A power supply **82**, such as a battery, e.g., a single use disposable battery, or rechargeable battery, is provided. In some embodiments, the active operational life of the battery may exceed the active operational life of the sensor **14**.

FIG. **24** illustrates in cross-section the orientation of the sensor housing **122** with respect to the sharp **124** of inserter **100**. As discussed herein, sensor **14** is disposed in a substantially bent configuration, such that a portion of the sensor, e.g., the insertion portion **30** and the proximal retention portion **48** are substantially vertical (e.g., substantially aligned with the longitudinal axis of the inserter **100** and substantially perpendicular to the skin surface) and the contact portion **32** (shown in profile) is oriented in a substantially horizontal configuration, and in electrical contact with the data processing unit electronics, such as circuit **80**. The sensor tab **50** can be encased in the plastic of the sensor housing **122** (e.g., "overmolded") and secured in place. The notch **56** provides further stability to the sensor **14**, e.g., by allowing the sensor tab **50** to be encased by the material of the sensor housing **122**, and further provides a means for vertically orienting the sensor **14** during mounting, e.g., by allowing vertical positioning of the notch **56** with respect to a vertical landmark of the housing **122**.

The sensor **14**, mounted with the sensor housing **122**, is disposed within the concave recess in the carriage **130**. In the initial configuration of the inserter **100** (see, e.g., FIGS. **10** and **28-29**) the sharp **124** extends through a longitudinal aperture **168** formed in a carriage **130**. In some embodiments, the aperture **168** is appropriately sized, such that neither the sharp **124** nor needle hub **136** is in contact with the carriage **130**. Accordingly, the needle hub **136** (and sharp **124**) on the one hand, and the carriage **130** and the sensor housing **122**, on the other hand, move simultaneously but independently from one another. In other embodiments, a friction fit may be provided between the aperture and the sharp.

The insertion portion **30** and proximal retention portion **48** of the sensor **14** are disposed within a longitudinal bore **162** within the sharp **124**. (See, e.g., FIG. **19**) The proximal retention portion **48** is disposed within the longitudinal bore of the sharp and provides additional stability to the mounting of the sensor **14** within the sharp **124**. The longitudinal wall gap or opening **162** of sharp **124** is aligned with the sensor **14**, such that the tab **50** and the contact portion **32** extend laterally outward from the sharp **124**.

With continued reference to FIGS. **15** and **16**, shuttle **134** includes wings **182** and resilient distally-extending fingers **184**. Inner rail **128** is illustrated in FIG. **25**. As illustrated in FIG. **26**, shuttle **134** is sized and configured for slidable movement within inner rail **128**. Wings **182** of shuttle **134** are configured for slidable movement within axial notches **188** of inner rail **128**. When fingers **184** of shuttle **134** are disposed in their normally biased outward position, fingers **184** engage the lower surface **194** of inner rail **128**. In the configuration illustrated in FIG. **26**, shuttle **134** is locked with respect to inner rail **128**. As will be discussed herein, fingers **184** may be biased radially inward to allow upward movement of shuttle **134** relative to inner rail **128**.

As illustrated in FIG. **10**, inner rail includes an upper surface **186** for engagement with handle **102**. In some embodiments, surface **186** is adhered or otherwise fixed to handle **102**.

The relationship of inner rail **128**, shuttle **134** and base **142** is illustrated in FIG. **27**. In an initial configuration, inner rail **128** and shuttle **134** are in a locked relationship by engagement of wings **182** and fingers **184**. Inner rail **128** and shuttle **134** are axially movable within base **142**. Spring **146**, which is secured between spring floor **148** of base **142** and wings **182** of shuttle **134** biases the inner rail **128** and shuttle **134** in a proximal (upward) direction.

Inserter **100** is illustrated in section in FIGS. **28-29** prior to use in a sensor pre-deployment position. Cap **104** is attached to the distal portion of inserter **100**, via inter-engagement of threads **110** and **111**.

As illustrated in FIG. **28**, the inserter **100** includes an initial configuration in which the handle **102** is disposed in a proximal position with respect to the base **142**. In such configuration, the sharp **124** is disposed in a configuration spaced apart from an aperture of the adhesive layer **118**.

As illustrated in FIG. **30**, inner rail **128** includes a carriage **130**. In a sensor insertion position, the handle **102** is depressed downward (arrow D) against the bias of spring **146**, the inner rail **128** moves downwardly with the carriage **130** and the sensor housing **122**. Shuttle **134** supports needle hub **136**, from which sharp **124** extends longitudinally within the inserter **100**. Initially shuttle **134** is coupled to inner rail **128** via inter-engagement of fingers **184** of shuttle **134** with distal surface **194** of inner rail **128**, and both shuttle **134** and inner rail **128** move distally together as a unit.

As the sharp **124** is urged distally (FIG. **30**), it carries the sensor insertion portion **30** of sensor **14** into the subcutaneous portion of the subject's skin S and into contact with the interstitial fluid. As carriage **130** reaches a distal position, the distal surface of the sensor housing **122** engages the upper surface of adhesive pad **118**, thereby becoming adhered to the skin surface S of the subject.

Flanges **170** on base **142** engage fingers **184** of shuttle **134**. Fingers **184** are pivoted or bend inwards by contact with flanges **170** (as indicated by arrows F).

As illustrated in FIG. **31**, such pivoting of fingers **184** causes fingers **184** to become disengaged from distal edge **194** of inner rail **128**. Shuttle **134** is thereby disengaged from inner rail **128**. Disengagement of the shuttle **134** from the inner rail **128** permits the spring **146** to expand, thereby advancing the shuttle **134** to a proximal position, and withdrawing the sharp **124** from the sensor **14** and the skin S of the subject, while leaving the sensor **14** in the skin. Once the sharp has been withdrawn from the subject, it is no longer accessible from the distal portion of the inserter **100**, which prevents accidental needle sticks. When the carriage **130** reaches the distal position in which flanges **170** engage fingers **184** of needle shuttle **134**, needle shuttle **134** withdraws needle **124** automatically without further input from the user.

Prior to activation of the integrated sensor **14** and sensor electronics assembly **16** for use, there may be a period of time from the manufacturing that the assembly **16** may be in a "sleep" or "idle" mode. With a power supply such as a battery integrated within the assembly, for reasons including cost optimization and prolonging shelf life, embodiments of the present disclosure include systems that are activated merely by positioning the sensor **14** and electronics unit **16** on a skin surface as described above, i.e., no additional action may be required of the user other than applying a force to housing **122**. As such, insertion of the sensor **14** and/or mounting of the housing **122** causes activation of the electronics **80**. In certain embodiments, activation switch configurations are included which may be configured to be triggered, for example, by the insertion device activation, thereby turning on the integrated sensor and sensor electronics assembly into an active mode.

As illustrated in FIG. **29**, inserter **100** is also provided with a plunger switch **185**, which provides automatic activation of the electronics **80** of the data processing unit **12**. In some embodiments, the plunger switch **185** is a longitudinally slidable member disposed on the distal surface of the sensor housing **122**. When the sensor housing is advanced proximally, it engages the adhesive pad **118**, or alternatively the skin surface of the subject. Upon such engagement, the plunger switch **185** is moved axially (proximally) with respect to the housing **122**. The plunger switch in the proximal position is shown in FIG. **30**, for example. Such axial movement is used to activate the sensor electronics **80**. In some embodiments, the plunger switch is spring biased. Accordingly, as long as the sensor housing is maintained in a fixed relationship with the adhesive pad **118** against the bias, electronic activation is maintained. If the sensor housing is removed from the adhesive or the skin, the plunger switch moves with the bias, and the electronics are deactivated. In other embodiments, the plunger switch provides a one-time activation of the electronics. In such cases, once the electronics are activated, the sensor housing is not required to remain in contact with the adhesive or the skin in order to maintain activation.

As illustrated in FIGS. **32-33**, embodiments of a power supply switch mechanism include conductive plugs of the on-body integrated sensor and sensor electronics assembly **16** in accordance with the present disclosure. FIGS. **32-33** illustrate enlarged sectional views of sensor housing **122**. As shown, the sensor electronics assembly circuit board **710** may be provided with a physical gap **750** that breaks the electrical circuit between the power supply (e.g., battery) and the other circuitry of the sensor electronics assembly.

In one embodiment, when the predetermined force is applied on the insertion device **100** as discussed above, a conductive portion **720** provided within the housing **122** of the sensor electronics may be moved in a direction as shown by arrow **730** such that electrical contact is established in the physical gap **750** on the circuit board, by for example, the conductive portion **720** coming into physical contact with the conductive portions **760** of the circuit board **710**. In this manner, in one embodiment, the electrical path from the power supply and the remaining circuitry on the circuit board of the sensor electronics is completed, thereby powering the sensor electronics.

By way of another example, referring to FIG. **33**, the conductive portions **760** of the circuit board are provided on the board itself, and the conductive plug **740**, for example, when pushed into the cavity **750**, establishes electrical contact between the conductive portions **760** of the circuit board.

In one embodiment, as discussed above, the actuation of the insertion device **100** to position the sensor and sensor electronics assembly triggers the switch mechanism shown in FIGS. **32-33** by also moving the conductive portion **720** or the conductive plug **760** in the direction complimentary to the direction of the introducer movement, and thereby switching on the sensor electronics. Within the scope of the present disclosure, the activation of the sensor electronics by moving the conductive portion **720** or the conductive plug may include a separate procedure, where after positioning the sensor and the sensor electronics assembly on the skin surface, a predetermined force is applied on the housing of the integrated sensor **14** and sensor electronics assembly such that the desired movement of the conductive portion **720** or the conductive plug **760** may be achieved.

FIGS. **34**A-**36**B illustrate another configuration of the power supply switch mechanism including conductive pads of the on-body integrated sensor and sensor electronics assembly in accordance with embodiments of the present disclosure. Referring to FIG. **34**A, an exposed conductive ring **771** may be provided and configured to contact the surface of the circuit board in the sensor housing **122** (shown in cross section in FIG. **34**B) such that, the insertion device activation positions the conductive ring **771** on the surface of the circuit board so as to complete the electrical contact of the sensor housing **122** (by for example, manual force

applied on the insertion device placing the conductive ring in contact with the circuit board of the sensor electronics).

Referring to FIGS. **35**A-B, in another aspect, electrical contact pads **772**, **773** may be provided to the circuit board in the sensor housing **122** (shown in cross section in FIG. **35**B, such that the mating of the contact pads with the conductive ring **771** switches on the sensor electronics device to provide power to the device from its power source. FIGS. **36**A-B show yet another configuration of the switch activation mechanism in accordance with the present disclosure, where a portion of the conductive ring **774** is selectively positioned and provided to establish electrical contact in the sensor housing **122** (shown in cross section in FIG. **36**B).

As discussed, each of the activation configurations described above includes a break in the circuitry from the power source such that the power supply is not drained when the device is not in use, and upon activation, the break in the electrical contact is completed, thereby powering the device and activating it for operation.

FIG. **37** illustrates a power supply switch mechanism including an internal switch with a push rod activation of the on-body integrated sensor and sensor housing **122** in accordance with embodiments of the present disclosure. As shown, in one embodiment, push rod **810** may be provided and positioned in the sensor electronics such that when a force is applied in the direction as shown by arrow **830**, the push rod **810** is displaced in the same direction and completes the electrical contact between the two contacts **820**, **821**. In one aspect, the push rod **810** may be provided within a seal **840** such as an O-ring or similar components.

FIG. **38** illustrates power supply switch mechanism including introducer retraction trigger activation of the on-body integrated sensor and sensor housing **122** in accordance with embodiments of the present disclosure. As shown, a nonconducting needle or device **910** is provided to physically separate two electrical contacts **920**, **921**. Each of the electrical contacts **920**, **921** is biased or spring loaded to be urged towards each other, physically separated by the nonconducting needle **910**. Accordingly, when the nonconducting needle **910** is retracted or pulled away from the sensor electronics assembly in the direction as shown by arrow **930**, the electrical contacts **920**, **921** are configured to contact each other, thereby completing the break in the circuit and establishing electrical connection to activate the sensor electronics assembly. In one aspect, the nonconducting device or needle **910** may include, for example, but not limited to, glass, plastic or any other material suitable to separate two electrical contacts and provide insulation therebetween.

FIG. **39** illustrates power supply switch mechanism with a contact switch of the on-body integrated sensor and sensor electronics assembly in accordance with embodiments of the present disclosure. As shown, in a further aspect, there is provided an electronic switch **1001** (that is configured to draw an insubstantial amount of power from the sensor electronics power supply), and when triggered, completes the break between the contacts **1010**, **1011** by physically contacting the two contacts **1010**, **1011** with the activation component **1002** that completes the circuit in the sensor electronics from its power supply such as battery to activate the device for operation.

FIGS. **40-41** illustrate a power supply switch mechanism with a battery contact locking mechanism of the on-body integrated sensor and sensor electronics assembly **122** in accordance with the present disclosure. Referring to FIGS. **40-41**, in still another aspect, the battery contact of the sensor electronics may be provided with a barbed tab **1110**. In post manufacturing shelf mode when the device is non-operational, the tab **1110** is positioned within the sensor electronics housing in the position as shown in FIG. **40** so that it is not in contact with the conductive contact **1120** of the sensor electronics circuit board. When in use as shown in FIG. **41**, the tab **1110** may be biased such that it physically contacts the conductive contact **1120** on the circuit board, thereby closing the circuit to/from the battery/power source and thus activating or switching on the sensor electronics. As shown in the Figures, the tab **1110** may be configured that upon biasing to establish contact with the conductive contact **1120**, it locks or latches with the conductive contact **1120** and the circuit board so as to maintain the electrical connection.

FIGS. **42-43** illustrate power supply switch mechanism with a bi-modal dome switch of the on-body integrated sensor and sensor electronics assembly in accordance with embodiments of the present disclosure. Yet in another embodiment, a bi-modal dome shaped switch **1210** is provided on the circuit board of the sensor electronics assembly such that, when pressed down (as shown in FIG. **42**), the dome shaped layer **1210** (which may include, for example, a thin sheet metal dome) may be configured to retain the concave shape as shown in FIG. **43** and effectively closing the circuit on the circuit board at the contact point **1220**. In one aspect, the dome shaped layer **1210** may be configured to shunt to short two or more electrical contacts at the contact point **1220** of the circuit board. Alternatively, the dome shaped layer **1210** may be connected to the circuit board such that one end of the dome shaped layer **1210** is in contact with one of the two or more open electrical contacts, and the depression of the dome shaped layer **1210** closes the circuit on the circuit board by physically contacting the other one or more of the open electrical contacts.

In the manner described above, in accordance with various embodiments of the present disclosure, sensor electronics activation switch configurations are provided that may be triggered or activated automatically or semi-automatically in response to the activation of the insertion device described above, or alternatively, may be separately activated by the user by, for example, depressing upon a portion of the housing or switch provided on the housing of the sensor electronics. Accordingly, power consumption may be optimized for the sensor electronics assembly while improving post manufacturing shelf life of the device prior to use or activation.

It is understood that the subject matter described herein is not limited to particular embodiments described, as such may, of course, vary. It is also understood that the terminology used herein is for the purpose of describing particular embodiments only, and is not intended to be limiting, since the scope of the present subject matter is limited only by the appended claims.

Additional detailed description of embodiments of the disclosed subject matter are provided in but not limited to: U.S. Pat. Nos. 7,299,082; 7,167,818; 7,041,468; 6,942,518; 6,893,545; 6,881,551; 6,773,671; 6,764,581; 6,749,740; 6,746,582; 6,736,957; 6,730,200; 6,676,816; 6,618,934; 6,616,819; 6,600,997; 6,592,745; 6,591,125; 6,560,471; 6,540,891; 6,514,718; 6,514,460; 6,503,381; 6,461,496; 6,377,894; 6,338,790; 6,299,757; 6,299,757; 6,284,478; 6,270,455; 6,175,752; 6,161,095; 6,144,837; 6,143,164; 6,121,009; 6,120,676; 6,071,391; 5,918,603; 5,899,855; 5,822,715; 5,820,551; 5,628,890; 5,601,435; 5,593,852; 5,509,410; 5,320,715; 5,264,014; 5,262,305; 5,262,035; 4,711,245; 4,545,382; U.S. Patent Publication No. 2004/

0186365, published Sep. 23, 2004, now U.S. Pat. No. 7,811,231; U.S. Patent Application No. 61/238,646, filed Aug. 31, 2009, the disclosures of each of which is incorporated herein by reference.

What is claimed is:

1. An insertion assembly, comprising:

(a) an on-body unit, comprising:

a housing comprising a top surface and a bottom surface, wherein the top surface comprises an opening of the top surface, wherein the bottom surface comprises an opening of the bottom surface, and wherein a longitudinal axis extends through the opening of the top surface and the opening of the bottom surface;

a glucose sensor; and

sensor electronics disposed within the housing and coupled with the glucose sensor; and

(b) an inserter, comprising:

a proximal end, a distal end, and an interior; and

a sharp,

wherein the on-body unit and the sharp are entirely disposed in the interior of the inserter,

wherein at least a portion of the glucose sensor is disposed in the sharp,

wherein the sharp extends through the opening of the top surface and the opening of the bottom surface along the longitudinal axis when the on-body unit is in a first position,

wherein the inserter is configured to advance the on-body unit and the sharp in a linear direction from the first position to a second position such that the sharp pierces skin of a user and the housing of the on-body unit is secured to the skin of the user in the second position,

wherein the distal end of the inserter is configured to be positioned on the skin of the user before advancement of the on-body unit and the sharp,

wherein the inserter is further configured to automatically retract the sharp from within the user and entirely into the interior of the inserter and leave a part of the glucose sensor in the skin of the user, and

wherein the distal end of the inserter is further configured to be removed from the skin of the user after automatic retraction of the sharp from within the user.

2. The insertion assembly of claim **1**, further comprising an adhesive portion configured to secure the housing to the skin of the user, wherein the adhesive portion is further configured to extend outwardly beyond the bottom surface of the housing along the skin in all directions when the housing is secured to the skin of the user.

3. The insertion assembly of claim **2**, wherein a distance between the housing when the on-body unit is in the first position and the housing when the on-body unit is in the second position is greater than a maximum height of the housing.

4. The insertion assembly of claim **3**, wherein the sensor electronics comprise a processor, a power source, an analog interface, a data storage unit, and wireless communication circuitry configured to communicate data indicative of a glucose level.

5. The insertion assembly of claim **3**, wherein the sharp is configured to pierce the skin of the user at an angle substantially perpendicular to the skin of the user.

6. The insertion assembly of claim **3**, wherein the on-body unit further comprises a side wall of the housing, wherein the side wall is located between the top surface and the bottom surface, wherein the side wall comprises a first portion and a second portion, and wherein the second portion of the side wall defines a non-orthogonal angle relative to both the first portion of the side wall and the top surface of the housing.

7. The insertion assembly of claim **3**, wherein the sensor electronics are in a sleep mode or an idle mode when the on-body unit is in the first position.

8. The insertion assembly of claim **3**, wherein the sensor electronics are configured to be activated when the on-body unit is at or near the second position.

9. The insertion assembly of claim **3**, wherein the sensor electronics further comprise an opening of the sensor electronics along the longitudinal axis, and wherein the sharp extends through the opening of the sensor electronics when the on-body unit is in the first position.

10. The insertion assembly of claim **3**, wherein the inserter further comprises an inserter base, and wherein the proximal end of the inserter is configured to move in a downward direction toward the skin of the user relative to the inserter base in response to an application of force on the proximal end of the inserter.

11. The insertion assembly of claim **10**, wherein the inserter is configured to advance the on-body unit and the sharp from the first position to the second position after the application of force on the proximal end of the inserter.

12. The insertion assembly of claim **3**, further comprising a cap removably attached to a distal portion of the inserter by a plurality of threads, and wherein the cap comprises an interior space comprising a sterile environment.

13. The insertion assembly of claim **12**, wherein the cap further comprises a plurality of vertically extending grooves spaced apart around an outer perimeter surface of the cap.

14. The insertion assembly of claim **3**, wherein a height profile of the housing is less than or equal to approximately 10 millimeters.

15. The insertion assembly of claim **3**, further comprising a sensor hub,

wherein the glucose sensor comprises a distal sensor portion and a proximal sensor portion,

wherein the distal sensor portion is configured to sense a glucose level of the user,

wherein the proximal sensor portion is engaged with the sensor hub, and

wherein the distal sensor portion is substantially orthogonal to the proximal sensor portion.

16. The insertion assembly of claim **3**, wherein the distal end of the inserter defines a plane, and wherein the bottom surface of the housing is parallel to the plane when the on-body unit is in the first position.

17. The insertion assembly of claim **3**, wherein the on-body unit is configured to be disposed after a single use.

18. The insertion assembly of claim **2**, wherein the opening of the top surface is a first opening of the top surface, wherein the top surface further comprises a second opening of the top surface, wherein the first opening of the top surface has a first maximum width, and wherein the second opening of the top surface has a second maximum width less than the first maximum width.

19. An insertion assembly, comprising:

(a) an on-body unit, comprising:

a housing comprising a top surface and a bottom surface, wherein the top surface comprises an opening of the top surface, wherein the bottom surface comprises an opening of the bottom surface, and

wherein a longitudinal axis extends through the opening of the top surface and the opening of the bottom surface;

a glucose sensor; and

sensor electronics disposed within the housing and coupled with the glucose sensor, wherein the sensor electronics comprise a processor, a power source, an analog interface, a data storage unit, and wireless communication circuitry configured to communicate data indicative of a glucose level; and

(b) an inserter, comprising:

a proximal end, a distal end, and an interior; and

a sharp;

wherein the on-body unit and the sharp are entirely disposed in the interior of the inserter,

wherein at least a portion of the glucose sensor is disposed in the sharp,

wherein the inserter is configured to advance the on-body unit and the sharp in a linear direction from a first position to a second position such that the sharp pierces skin of a user and the housing of the on-body unit is secured to the skin of the user in the second position,

wherein a distance between the housing when the on-body unit is in the first position and the housing when the on-body unit is in the second position is greater than a maximum height of the housing,

wherein a height profile of the housing is less than or equal to approximately 10 millimeters,

wherein the sharp is configured to pierce the skin of the user at an angle substantially perpendicular to the skin of the user,

wherein the sharp extends through the opening of the top surface and the opening of the bottom surface along the longitudinal axis when the on-body unit is in the first position,

wherein the distal end of the inserter is configured to be positioned on the skin of the user before advancement of the on-body unit and the sharp,

wherein the inserter is further configured to automatically retract the sharp from within the user and entirely into the interior of the inserter and leave a part of the glucose sensor in the skin of the user, and

wherein the distal end of the inserter is further configured to be removed from the skin of the user after automatic retraction of the sharp from within the user.

20. The insertion assembly of claim **19**, further comprising an adhesive portion configured to secure the housing to the skin of the user, wherein the adhesive portion is configured to extend outwardly beyond the bottom surface of the housing along the skin in all directions when the housing is secured to the skin of the user.

21. The insertion assembly of claim **20**, wherein the opening of the top surface is a first opening of the top surface, wherein the top surface further comprises a second opening of the top surface, wherein the first opening of the top surface has a first maximum width, and wherein the second opening of the top surface has a second maximum width less than the first maximum width.

22. The insertion assembly of claim **21**, wherein the sensor electronics further comprise an opening of the sensor electronics along the longitudinal axis, and wherein the sharp extends through the opening of the sensor electronics when the on-body unit is in the first position.

23. The insertion assembly of claim **22**, wherein the distal end of the inserter defines a plane, and wherein the bottom surface of the housing is parallel to the plane when the on-body unit is in the first position.

24. The insertion assembly of claim **23**, wherein the inserter further comprises an inserter base, wherein the proximal end of the inserter is configured to move in a downward direction toward the skin of the user relative to the inserter base in response to an application of force on the proximal end of the inserter, and wherein the inserter is configured to advance the on-body unit and the sharp from the first position to the second position after the application of force on the proximal end of the inserter.

25. The insertion assembly of claim **23**, wherein the sensor electronics are in a sleep mode or an idle mode when the on-body unit is in the first position.

26. The insertion assembly of claim **23**, wherein the sensor electronics are configured to be activated when the on-body unit is at or near the second position.

27. The insertion assembly of claim **23**, wherein the on-body unit further comprises a side wall of the housing, wherein the side wall is located between the top surface and the bottom surface, wherein the side wall comprises a first portion and a second portion, and wherein the second portion of the side wall defines a non-orthogonal angle relative to both the first portion of the side wall and the top surface of the housing.

28. The insertion assembly of claim **23**, further comprising a sensor hub,

wherein the glucose sensor comprises a distal sensor portion and a proximal sensor portion,

wherein the distal sensor portion is configured to sense a glucose level of the user,

wherein the proximal sensor portion is engaged with the sensor hub, and

wherein the distal sensor portion is substantially orthogonal to the proximal sensor portion.

29. The insertion assembly of claim **23**, further comprising a cap removably attached to a distal portion of the inserter by a plurality of threads, and wherein the cap comprises an interior space comprising a sterile environment.

30. The insertion assembly of claim **29**, wherein the cap further comprises a plurality of vertically extending grooves spaced apart around an outer perimeter surface of the cap.

* * * * *