(12) INTERNATIONAL APPLICATION PUBLISHED UNDER THE PATENT COOPERATION TREATY (PCT)

(19) World Intellectual Property Organization
International Bureau

(43) International Publication Date
24 December 2008 (24.12.2008)

PCT

(10) International Publication Number
WO 2008/155377 A1

(51) International Patent Classification:
A61M 5/158 (2006.01)

(21) International Application Number:
PCT/EP2008/057769

(22) International Filing Date: 19 June 2008 (19.06.2008)

(25) Filing Language: English

(26) Publication Language: English

(30) Priority Data:
60/945,172 20 June 2007 (20.06.2007) US

(71) Applicant *(for all designated States except US)*: **UNOMEDICAL A/S** [DK/DK]; Birkerød Kongevej 2, DK-3460 Birkerød (DK).

(72) Inventor; and
(75) Inventor/Applicant *(for US only)*: **HASTED, Søren, Bo** [DK/DK]; Rosenvængets Allé 27A, 2. tv., DK-2100 København Ø (DK).

(74) Agent: **ZACCO DENMARK A/S**; Hans Bekkevolds Allé 7, DK-2900 Hellerup (DK).

(81) Designated States *(unless otherwise indicated, for every kind of national protection available)*: AE, AG, AL, AM, AO, AT, AU, AZ, BA, BB, BG, BH, BR, BW, BY, BZ, CA, CH, CN, CO, CR, CU, CZ, DE, DK, DM, DO, DZ, EC, EE, EG, ES, FI, GB, GD, GE, GH, GM, GT, HN, HR, HU, ID, IL, IN, IS, JP, KE, KG, KM, KN, KP, KR, KZ, LA, LC, LK, LR, LS, LT, LU, LY, MA, MD, ME, MG, MK, MN, MW, MX, MY, MZ, NA, NG, NI, NO, NZ, OM, PG, PH, PL, PT, RO, RS, RU, SC, SD, SE, SG, SK, SL, SM, SV, SY, TJ, TM, TN, TR, TT, TZ, UA, UG, US, UZ, VC, VN, ZA, ZM, ZW.

(84) Designated States *(unless otherwise indicated, for every kind of regional protection available)*: ARIPO (BW, GH, GM, KE, LS, MW, MZ, NA, SD, SL, SZ, TZ, UG, ZM, ZW), Eurasian (AM, AZ, BY, KG, KZ, MD, RU, TJ, TM), European (AT, BE, BG, CH, CY, CZ, DE, DK, EE, ES, FI, FR, GB, GR, HR, HU, IE, IS, IT, LT, LU, LV, MC, MT, NL, NO, PL, PT, RO, SE, SI, SK, TR), OAPI (BF, BJ, CF, CG, CI, CM, GA, GN, GQ, GW, ML, MR, NE, SN, TD, TG).

Published:
— *with international search report*
— *before the expiration of the time limit for amending the claims and to be republished in the event of receipt of amendments*

(54) Title: CANNULA INSERTION DEVICE WITH AUTOMATIC NEEDLE RETRACTION COMPRISING ONLY ONE SPRING

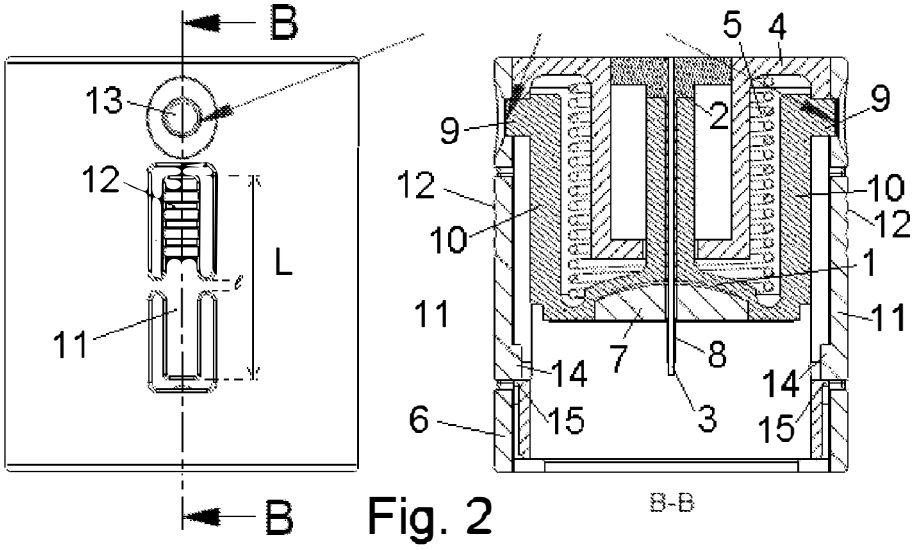

Fig. 2

(57) Abstract: The inserter for an infusion set comprises an insertion needle and a spring unit assuring automatic insertion and automatic retraction of the insertion needle. The inserter for a medical device comprises - a housing (6), - a first body (1) which is movable relative to the housing and comprising penetrating means (3) pointing in the direction of insertion, - a second body (4) which is also movable relative to the housing (6) and - driving means (5) which move respectively the first body (1) and the second body (4) relative to the housing (6) wherein the driving means (5) moves the first body (1) in the direction of insertion and moves the second body (4) in a direction different from the insertion direction.

WO 2008/155377 A1

DEXCOM
EXHIBIT 1011

CANNULA INSERTION DEVICE WITH AUTOMATIC NEEDLE RETRACTION COMPRISING ONLY ONE SPRING

The invention relates to an inserter for a medical device e.g. an infusion set for intermittent or continuous administration of a therapeutical substance, such as e.g. insulin. The inserter comprises an insertion needle and a spring unit assuring automatic insertion and automatic retraction of the insertion needle.

Background of the invention

It is known to construct inserters for infusion sets which hides and protects the insertion needle before insertion and which retracts the insertion needle after penetration of the patients skin and thereafter hides and protects the insertion needle.

Such a device is known from EP 1.762.259. The inserter according to this document comprises a needle hub comprising an insertion needle and two spring units assuring automatic insertion and automatic retraction of the insertion needle. Although the design of the device is compact and user friendly the mechanism is relatively complex as two spring units are used in order to make the device work correctly.

The present invention provides both protection of the insertion needle before insertion and after retraction and at the same time the inserter device is of a simple construction which only needs one spring unit.

Description of invention

The object of the invention is to provide a simple, non-expensive inserter for an infusion device which inserter would be easy and safe for the user to handle during use and safe to dispose of after use.

The invention concerns an inserter for inserting a medical device comprising a housing, a first body which is movable relative to the housing and comprising penetrating means pointing in the direction of insertion, a second body which is also movable relative to the housing and driving means which move respectively the first body and the second body relative to the housing wherein the driving means moves the first body in the direction of insertion and moves the second body in a direction different from the insertion direction.

In one embodiment the driving means first move the first body in the direction of insertion and then moves the second body in the direction different from the insertion direction. The driving means can comprise a single spring unit which could be a cluster of several springs or a single spring unit, e.g. a coiled spring. The spring unit of this one embodiment can work by first expanding in the insertion direction and then expanding in the direction different from the insertion direction. This direction different from the insertion direction can be in an angle of 180° ± 5° to the insertion direction.

In one embodiment the inserter device can be provided with first locking means which locking means can keep the first body in a chosen retracted position in relation to the housing while the driving means are biased i.e. the driving means posses stored or potential energy. These first locking means can comprise a protruding part on the first body which interacts with an opening in the housing.

In one embodiment the inserter is provided with second locking means which second locking means can keep the second body in a chosen forward position in relation to the housing while the driving means are biased i.e. the driving means posses potential energy, e.g. the second locking means comprises an inwardly protruding part of the housing which interacts with a distally turned surface of the second body.

According to one embodiment the inserter comprises means for locking the penetrating means to the second body while the second body is moving from a forward to a retracted position in relation to the housing.

The medical device used with the inserter device can be e.g. an infusion part for administrating medication or a sensor device for measuring values e.g. of the blood or a simple port/gateway for administering medication by a syringe or the like.

The invention also relates to a process for positioning a medical device on the skin of a patient which process comprises the following steps:

a) removing any packing and preparing the skin adhesion of the medical device;

b) placing the proximal end of the inserter against the skin of the patient or against a pre-positioned pad;.

c) unreleasing a first set of locking means (9) which will bring a first body (1) to reach a forward position and cause a proximal surface of the medical device to reach the surface it is to be placed on;

d) unreleasing a second set of locking means (11) which will result in that a second body (4) including parts locked to the second body (4) are distanced from the medical device which is left on the patients skin;

e) removing the inserter from the position while the medical device is left in the position.

Description of the drawings

The invention is explained in greater detail below with reference to the accompanying drawings wherein preferred embodiments of the invention is shown.

Fig. 1 shows a cut-through view of an embodiment of a device according to the invention. The embodiment is in a first state where the penetrating member is retracted and the spring unit is tightened.

Fig. 2 shows the same embodiment as fig. 1 in the same state but in a view which is perpendicular to the view of fig. 1.

Fig. 3 shows the same embodiment as fig. 1 and 2 in a second state where the penetrating member is in a forward position and the spring unit in a semi-tightened state.

Fig. 4 shows the same embodiment as the previous figures in a third state where the penetrating member is in a retracted position; the medical device is left on the skin of the patient and the spring unit in a non-tightened state.

Fig. 5 shows an exploded view of the same embodiment as the previous figures.

The device illustrated in fig. 1 comprises a carrier body 1 for a medical device to be inserted, a needle hub 2 comprising a penetrating member 3, a movable part 4, a spring unit 5 and a housing 6. The spring unit 5 is tightened or biased in the

The medical device can be al sorts of devices which for some reason needs to be placed sub- or transcutaneously on a patient for a shorter or longer time. In the embodiment illustrated in fig. 1-5 the medical device is a port-device. A port-device is a device which is placed on a user's skin for a period of upto three days and replaces numerous injections normally made be a syringe. The medical device could instead be an infusion part which device is also normally situated on the patient for several days and an infusion part has means for connecting it to a delivery device e.g. for delivering insulin. An infusion part can e.g. provide an optimized administration of a therapeutic substance as it allows very small doses to be transferred often. The medical device can also be a sensor device provided with a subcutaneously placed

sensor which is in contact with the patient's blood and able to register desired elements in the blood e.g. the sugar level.

The port-device shown in the figures comprises a body 7 having a through going opening and a cannula 8 made of a soft and flexible material.

Fig. 2 shows the same embodiment in the same state as fig. 1 but from an angle perpendicular to the view angle illustrated in fig. 1. From this angle it is possible to see how the carrier body 1 is provided with two protruding locking parts 9 which are positioned at the end of each a flexible arm 10. The protruding locking parts 9 fit into corresponding openings in the stationary housing 6 and lock the carrier body 1 in a retracted position before use. The spring unit 5 is biased and pushes against the locked carrier body 1 (downwards on fig. 2) and the movable part 4 (upwards on fig. 2). When a user puts pressure on the opposite positioned pressure points 13 which are corresponding to the opposite positioned protruding parts 9, the protruding parts 9 are disengage from the openings in the housing 6 and the spring unit 5 will push the carrier body 1 downwards as the movable part 4 is still locked in relation to the housing 6 with secondary locking means.

The secondary locking means have the form of a longitudinal cut-out 11 having the length L. The longitudinal cut-out is fixed to the housing 6 by thin parts of material close to the middle section, the fastening parts have the length/width ℓ and are symmetrically placed on each side of the cut-out 11. The length/width of the fastening parts are less than 10% of the total length of the cut-out 11, in the present embodiment the length/width of the fastening parts are approximately 6% of the length of the cut-out 11. The fastening parts are so relatively thin that it is possible to pivot the free ends of the cut-out 11 around the axis formed by the fastening parts. A first of the free ends 12 is provided with means which will make the user recognize these parts of the cut-out 11 as pressure points. In the embodiment in fig. 2 these means

comprises a series of flutes which can be felt by the user and recognized as a pressure point. When the user put pressure on the two opposite positioned first free ends 12, the first free ends 12 move towards the centre of the device while the second free ends moves outwards away from the centre of the device. The second free ends are provided with inwardly protruding parts 14 which are engaged with the edge 15 of an opening in the movable part 4.

Fig. 3 shows two perpendicular views of the inserter device, the view C-C are similar to fig. 1 and the view D-D is similar to fig. 2. The spring unit 5 of the embodiment in fig. 3 is in a semi-biased state, i.e. the spring unit 5 is released from the first lock made between the protruding parts 9 and the housing 6 and as a result of the releasing of the first locking means the cannula 8 of the medical device has been inserted subcutaneously in the patient. Also the carrier body 1 and the needle hub 2 has moved in relation to the movable part 4, the carrier body 1 has been distanced from the movable part 4 while the needle hub 2, which moves together with the carrier body 1, is moved from a surface position to an inner position in relation to the movable part 4 which makes it possible for the user to register that the penetrating member 3 is now in an inserted position.

Fig. 4 shows the same perpendicular views of the same embodiment of the inserter device as shown in fig. 3, but the spring unit 5 of the embodiment in fig. 4 is in an un-biased state, i.e. the spring unit 5 is also released from the second lock made between the inwardly protruding parts 14 of the housing 6 and the movable part 4 and as a result of the releasing of the second locking means the needle hub 2 together with the carrier body 1 is retracted from the patient. The user can observe this as the movable part 4 is raised in relation to the stationary housing 6.

Fig. 5 shows the same embodiment as fig. 1-4 but in an exploded view where the parts are partly separated in order to show the individual parts in a three-

dimensional way and how the individual parts relate to each other. The parts have the same reference numbers as in fig. 1-4.

The inserter device is normally delivered to the user joined with the medical device in a sterile packing which has to be removed before use. Either the medical device is provided with a mounting pad, that is a mounting pad is unreleasably fastened to the proximal side of the medical device, or a mounting pad is provided in a separate sterile packing and placed on the skin of the patient at a suitable insertion place before the medical device is inserted. If the mounting pad is unreleasably fastened to the medical device it will normally be necessary to remove a release layer from the adhesive surface of the mounting pad before using the inserter device.

After the sterile packing is removed and either the release layer is removed or the separate mounting pad is positioned, the inserter device is ready for insertion of the medical device.

- The proximal end of the inserter device is then placed against the skin of the patient or against the pre-positioned mounting pad; the proximal end of the inserter device is the end towards which the sharp end of the penetrating member points.
- Then the user puts pressure on the oppositely positioned pressure points 13 which will unlock the first locking means, i.e. the protruding locking parts 9. The unlocking of the first locking means result in the carrier body 1 including the medical device and the needle hub 2 being moved forward at the speed provided by the spring unit 5. The movement is stopped as the medical device touches the skin of the patient as further extension of the spring unit 5 is then prevented.
- Then the user puts pressure on the oppositely positioned pressure points 12 which unlocks the second locking means, i.e. the pivotally fastened cut-out 11. The unlocking of the second locking means result in the movable part

4 including the needle hub 2 being pushed away from the carrier body 1 and the medical device which is left inserted into the patients skin.

- The inserter device can now be removed from the insertion position while the medical device is left in the inserted position.

Claims:

1. An inserter device for a medical device comprising
- a housing (6),
- a first body (1) which is movable relative to the housing and comprising penetrating means (3) pointing in the direction of insertion,
- a second body (4) which is also movable relative to the housing (6) and
- driving means (5) which move respectively the first body (1) and the second body (4) relative to the housing (6)

characterized in that the driving means (5) moves the first body (1) in the direction of insertion and moves the second body (4) in a direction different from the insertion direction.

2. An inserter according to claim 1, **characterized in** that the driving means (5) first move the first body (1) in the direction of insertion and then moves the second body (4) in the direction different from the insertion direction.

3. An inserter according to claim 2, **characterized in** that the driving means (5) comprise a single spring unit (5).

4. An inserter according to claim 3, **characterized in** that the spring unit (5) is a coiled spring.

5. An inserter according to claim 3 or 4, **characterized in** that the spring unit (5) first expand in the insertion direction and then expand in the direction different from the insertion direction.

6. An inserter according to any of the claim 1-6, **characterized in** that the direction different from the insertion direction is in an angle of 180° ± 5° to the insertion direction.

7. An inserter according to any of the claims 1-6, **characterized in** that the inserter device is provided with first locking means (9) which locking means can keep the first body (1) in a chosen retracted position in relation to the housing (6) while the driving means (5) are biased.

8. An inserter according to claim 7, **characterized in** that the first locking means comprises a protruding part (9) on the first body (1) which interacts with an opening in the housing (6).

9. An inserter according to any of claims 1-7, **characterized in** that the inserter is provided with second locking means (11, 14) which second locking means can keep the second body (4) in a chosen forward position in relation to the housing (6) while the driving means (5) are biased.

10. An inserter according to any of claims 9, **characterized in** that the second locking means comprises an inwardly protruding part (14) of the housing (6) which interacts with a distally turned surface (15) of the second body (4).

11. An inserter according to any of the claims 1-10, **characterized in** that the inserter comprises means for locking the penetrating means (3) to the second body (4) while the second body (4) is moving from a forward to a retracted position in relation to the housing (6).

12. An inserter according to any of the preceding claims, **characterized in** that the medical device is an infusion part for administrating medication or a sensor device for measuring values e.g. of the blood or a simple port/gateway for administering medication by a syringe or the like.

13. Process for positioning a medical device on the skin of a patient **characterized in** that the process comprises the following steps:

a) removing any packing and preparing the skin adhesion of the medical device;

b) placing the proximal end of the inserter against the skin of the patient or against a pre-positioned pad;.

c) unreleasing a first set of locking means (9) which will bring a first body (1) to reach a forward position and cause a proximal surface of the medical device to reach the surface it is to be placed on;

d) unreleasing a second set of locking means (11) which will result in that a second body (4) including parts locked to the second body (4) are distanced from the medical device which is left on the patients skin;

e) removing the inserter from the position while the medical device is left in the position.

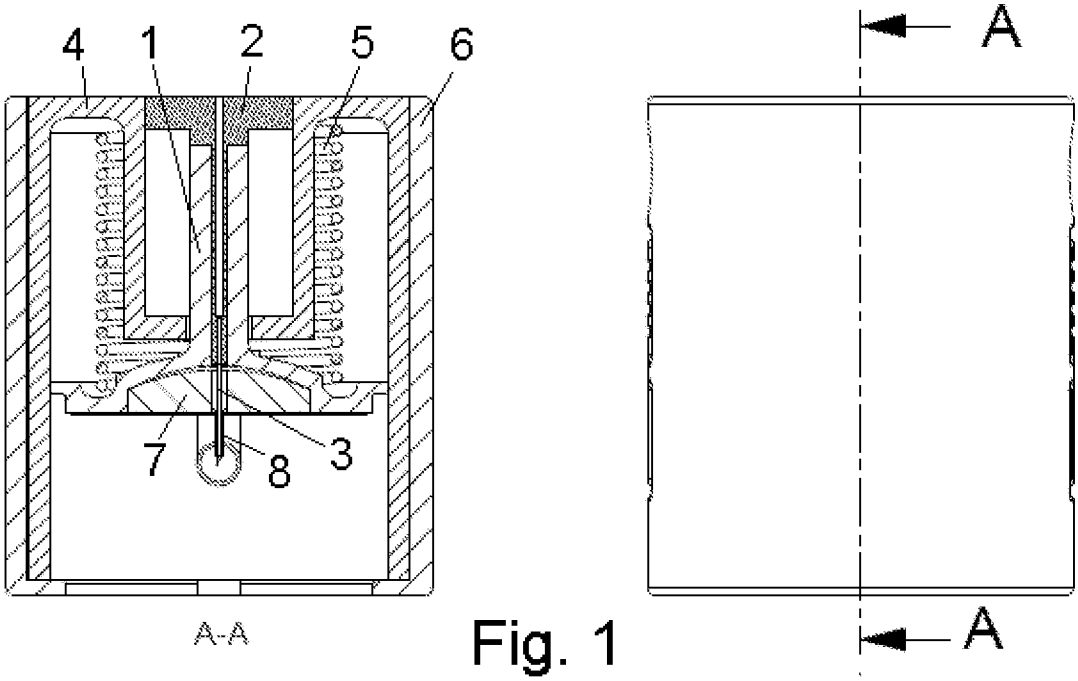
4
1
2
5
6
7
8
3
A-A
A
A

Fig. 1

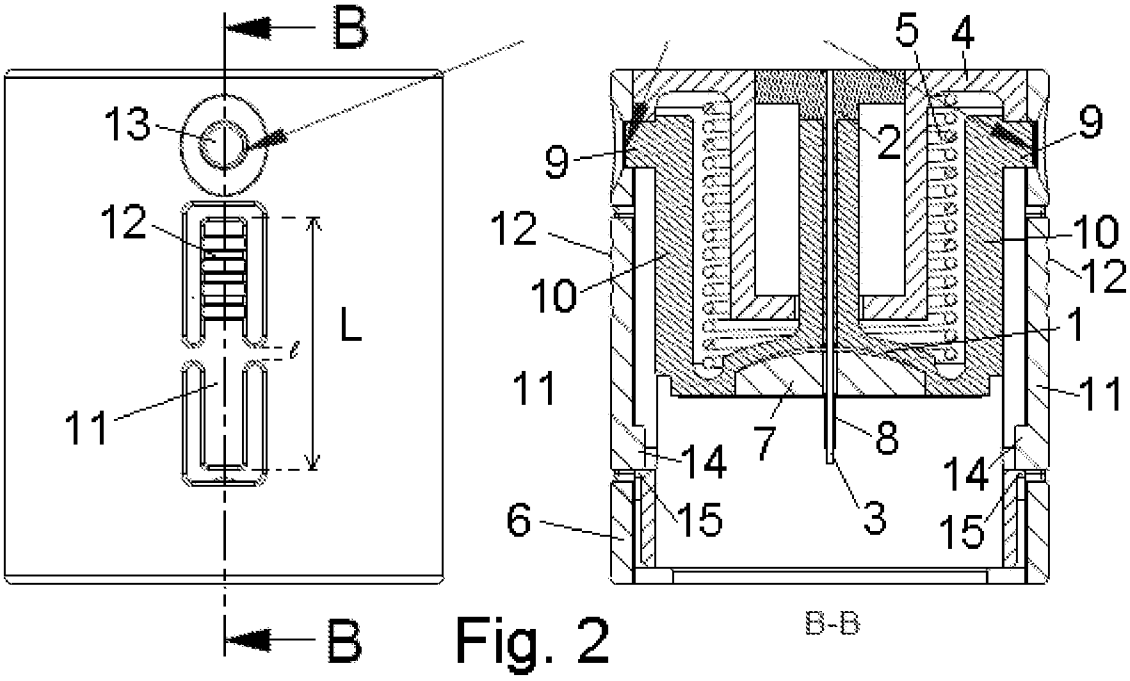
B
13
12
L
ℓ
11
B
5
4
9
2
9
12
10
10
12
1
11
11
7
8
14
14
6
15
3
15
B-B

Fig. 2

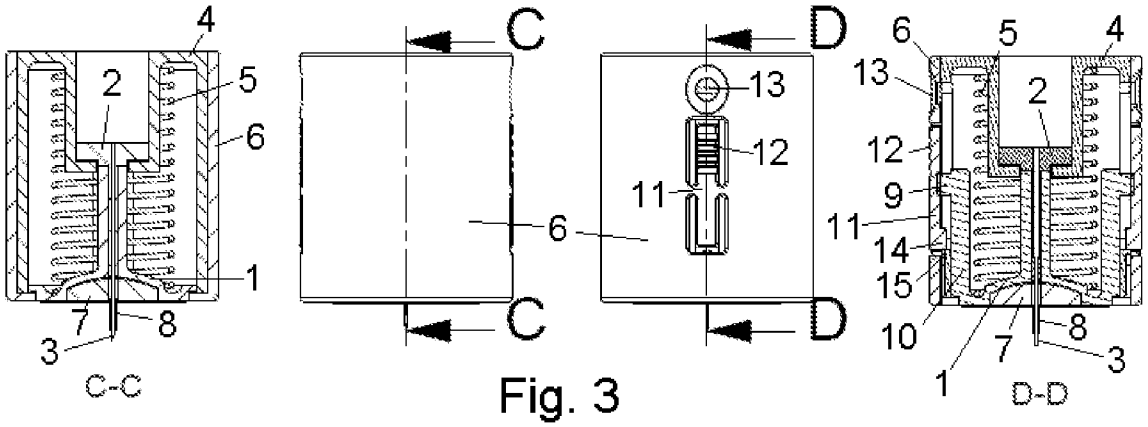
4
2
5
6
1
7
8
3
C-C
C
C
6
D
D
13
12
11
6
5
4
13
2
12
9
11
14
15
10
8
7
3
1
D-D

Fig. 3

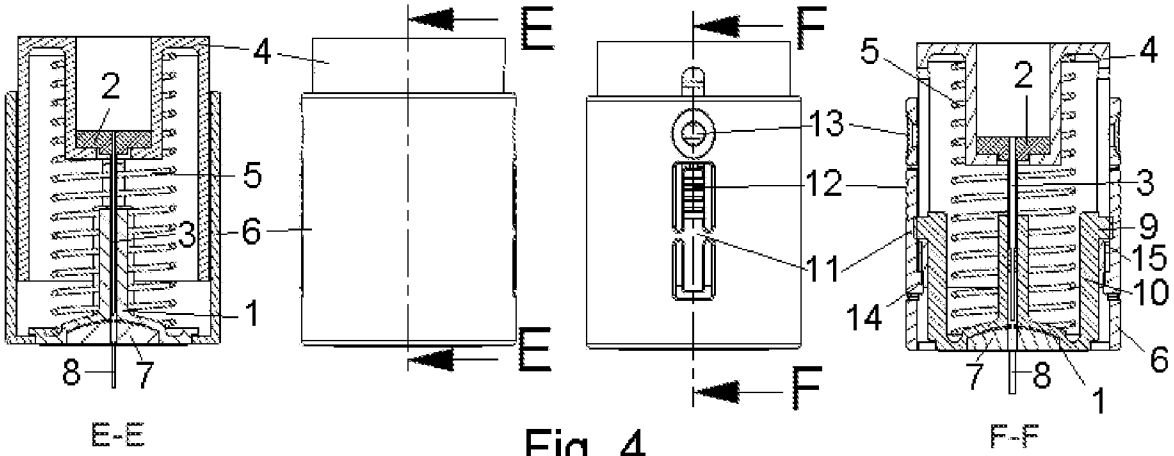
4
2
5
3
6
1
8
7
E-E
E
E
F
F
13
12
11
5
4
2
3
9
15
10
14
6
7
8
1
F-F

Fig. 4

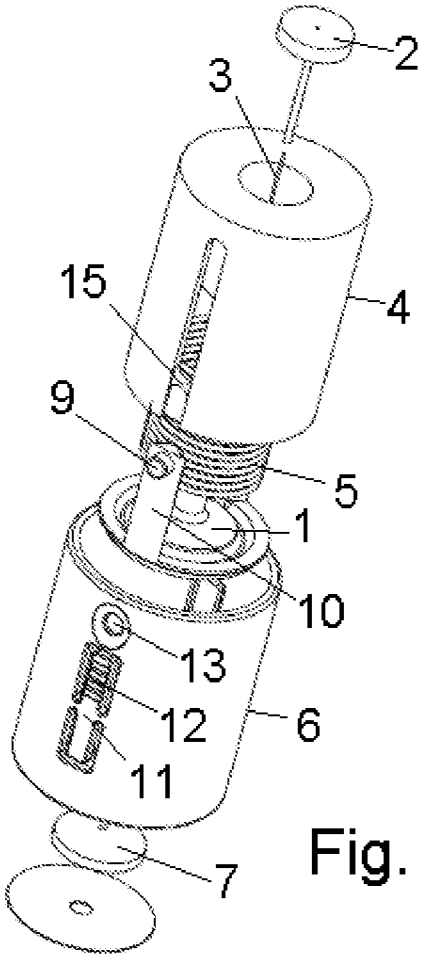

Fig. 5

INTERNATIONAL SEARCH REPORT

International application No
PCT/EP2008/057769

A. CLASSIFICATION OF SUBJECT MATTER
INV. A61M5/158

According to International Patent Classification (IPC) or to both national classification and IPC

B. FIELDS SEARCHED

Minimum documentation searched (classification system followed by classification symbols)
A61M

Documentation searched other than minimum documentation to the extent that such documents are included in the fields searched

Electronic data base consulted during the international search (name of data base and, where practical, search terms used)

EPO-Internal, WPI Data

C. DOCUMENTS CONSIDERED TO BE RELEVANT

Category*	Citation of document, with indication, where appropriate, of the relevant passages	Relevant to claim No.
X	WO 2006/061354 A (NOVO NORDISK AS [DK]; ETHELFELD ERIK WINKEL [DK]; SCHMIDT NICOLAI MICH) 15 June 2006 (2006-06-15) paragraphs [0104], [0105]; figures 25A-25D	1-12
X	US 2004/158207 A1 (HUNN MARCEL [CH] ET AL) 12 August 2004 (2004-08-12) paragraphs [0082] - [0089]; figures 13-18	1-12
X	US 2007/093754 A1 (MOGENSEN LASSE W [DK] ET AL) 26 April 2007 (2007-04-26) figures 1-5	1,2,6-12

☐ Further documents are listed in the continuation of Box C.

☒ See patent family annex.

* Special categories of cited documents :

"A" document defining the general state of the art which is not considered to be of particular relevance

"E" earlier document but published on or after the international filing date

"L" document which may throw doubts on priority claim(s) or which is cited to establish the publication date of another citation or other special reason (as specified)

"O" document referring to an oral disclosure, use, exhibition or other means

"P" document published prior to the international filing date but later than the priority date claimed

"T" later document published after the international filing date or priority date and not in conflict with the application but cited to understand the principle or theory underlying the invention

"X" document of particular relevance; the claimed invention cannot be considered novel or cannot be considered to involve an inventive step when the document is taken alone

"Y" document of particular relevance; the claimed invention cannot be considered to involve an inventive step when the document is combined with one or more other such documents, such combination being obvious to a person skilled in the art.

"&" document member of the same patent family

Date of the actual completion of the International search	Date of mailing of the international search report
5 November 2008	13/11/2008
Name and mailing address of the ISA/ European Patent Office, P.B. 5818 Patentlaan 2 NL - 2280 HV Rijswijk Tel. (+31-70) 340-2040. Fax: (+31-70) 340-3016	Authorized officer Krassow, Heiko

Form PCT/ISA/210 (second sheet) (April 2005)

International application No.
PCT/EP2008/057769

INTERNATIONAL SEARCH REPORT

Box No. II Observations where certain claims were found unsearchable (Continuation of item 2 of first sheet)

This International search report has not been established in respect of certain claims under Article 17(2)(a) for the following reasons:

1. [X] Claims Nos.: 13
because they relate to subject matter not required to be searched by this Authority, namely:

Rule 39.1(iv) PCT - Method for treatment of the human or animal body by surgeryThe method claimed implicitly comprises inserting a needle and cannula arrangement into the skin of a patient and is therefore to be considered a surgical method.

2. [ ] Claims Nos.:
because they relate to parts of the international application that do not comply with the prescribed requirements to such an extent that no meaningful International search can be carried out, specifically:

3. [ ] Claims Nos.:
because they are dependent claims and are not drafted in accordance with the second and third sentences of Rule 6.4(a).

Box No. III Observations where unity of invention is lacking (Continuation of item 3 of first sheet)

This International Searching Authority found multiple inventions in this international application, as follows:

1. [ ] As all required additional search fees were timely paid by the applicant, this international search report covers allsearchable claims.

2. [ ] As all searchable claims could be searched without effort justifying an additional fees, this Authority did not invite payment of additional fees.

3. [ ] As only some of the required additional search fees were timely paid by the applicant, this international search reportcovers only those claims for which fees were paid, specifically claims Nos.:

4. [ ] No required additional search fees were timely paid by the applicant. Consequently, this international search report is restricted to the invention first mentioned in the claims; it is covered by claims Nos.:

Remark on Protest

[ ] The additional search fees were accompanied by the applicant's protest and, where applicable, the payment of a protest fee.

[ ] The additional search fees were accompanied by the applicant's protest but the applicable protest fee was not paid within the time limit specified in the invitation.

[ ] No protest accompanied the payment of additional search fees.

INTERNATIONAL SEARCH REPORT

information on patent family members

international application No
PCT/EP2008/057769

Patent document cited in search report	Publication date	Patent family member(s)	Publication date
WO 2006061354 A	15-06-2006	CN 101072596 A	14-11-2007
		EP 1824536 A1	29-08-2007
US 2004158207 A1	12-08-2004	WO 02081012 A2	17-10-2002
		EP 1383560 A2	28-01-2004
		JP 2004524926 T	19-08-2004
US 2007093754 A1	26-04-2007	NONE	

Form PCT/ISA/210 (patent family annex) (April 2005)