US 20090240121A1

(19) United States

(12) Patent Application Publication

Bickoff

(10) Pub. No.: US 2009/0240121 A1

(43) Pub. Date: Sep. 24, 2009

(54) INTRAVASCULAR SENSOR AND INSERTION SET COMBINATION

(75) Inventor: **Charles Bickoff**, Sharon, MA (US)

Correspondence Address:
MESMER & DELEAULT, PLLC
41 BROOK STREET
MANCHESTER, NH 03104 (US)

(73) Assignee: **NOVA BIOMEDICAL CORPORATION**, Waltham, MA (US)

(21) Appl. No.: **12/052,985**

(22) Filed: **Mar. 21, 2008**

Publication Classification

(51) **Int. Cl.**
A61B 5/00 (2006.01)

(52) **U.S. Cl.** **600/309**

(57) **ABSTRACT**

An intravascular sensor assembly insertable into an intravenous catheter, the sensor assembly includes a sheath having a sheath proximal end and a sheath distal end wherein an outer diameter of the sheath is sized to be substantially equal to the outer diameter of an insertion needle of the intravenous catheter, a hub sealingly connected to the sheath proximal end, the hub adapted for removably coupling to the intravenous catheter, a sensor disposed within the sheath, the sensor having a sensor shank with a shank distal end and a shank proximal end, a plurality of sensor elements including a working electrode with a reagent matrix disposed thereon, the reagent matrix comprising an enzyme capable of catalyzing a reaction involving a substrate for the enzyme and a reference electrode, the plurality of sensor elements disposed adjacent the shank distal end, a plurality of connector pads disposed at the shank proximal end where the plurality of connector pads are contained within the hub and the plurality of sensor elements are exposed adjacent the sheath distal end, and a plurality of elongated conductive elements where each of the plurality of conductive elements electrically couples one of the plurality of sensor elements to one of the plurality of connector pads, and a cable electrically coupled to the plurality of connector pads.

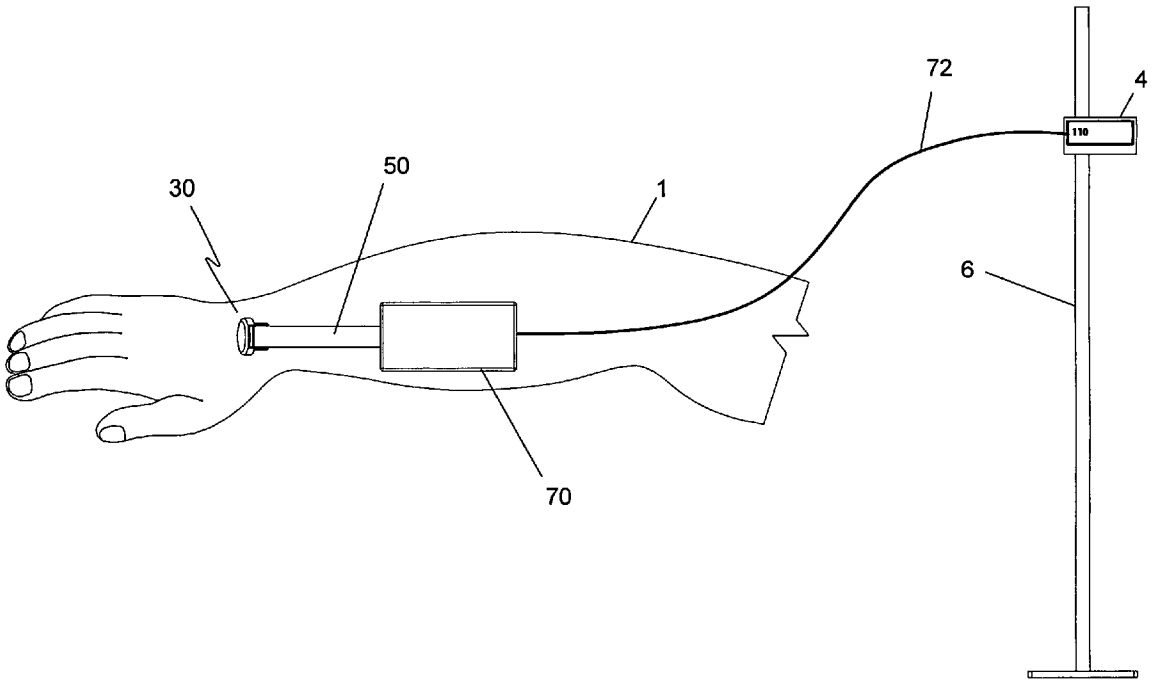

DEXCOM
EXHIBIT 1018

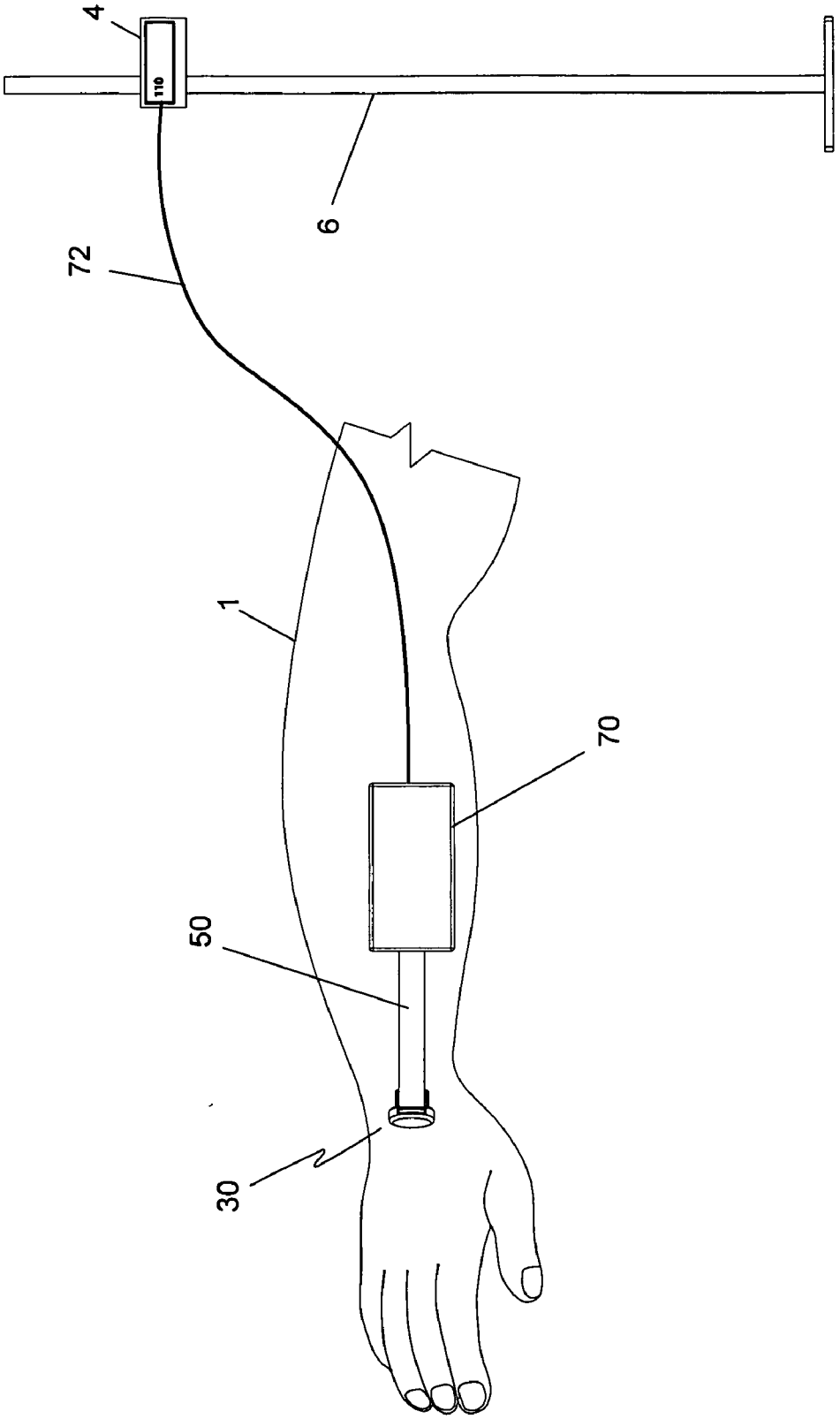

Fig. 1

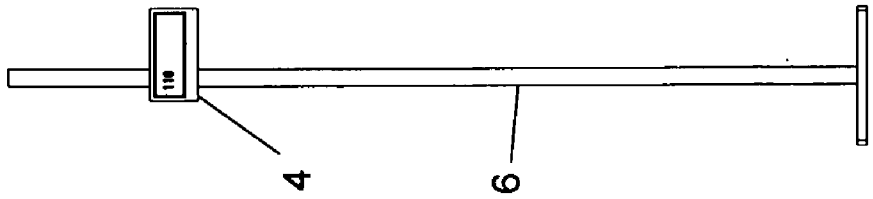

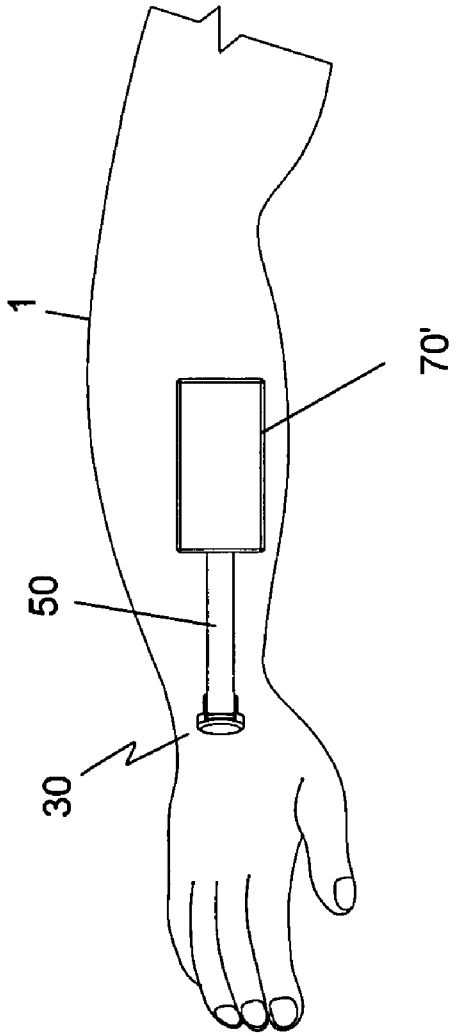

Fig. 2

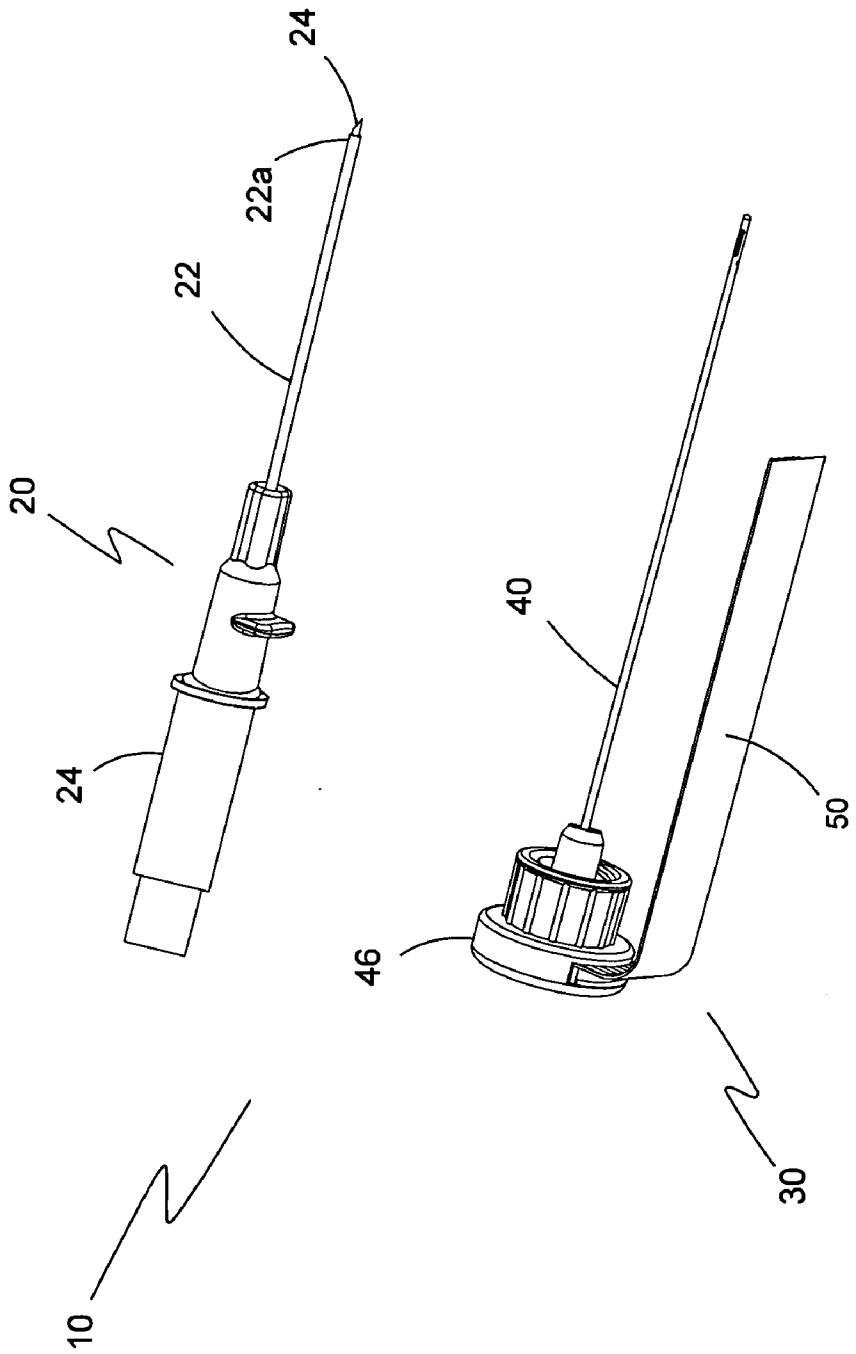

Fig. 3

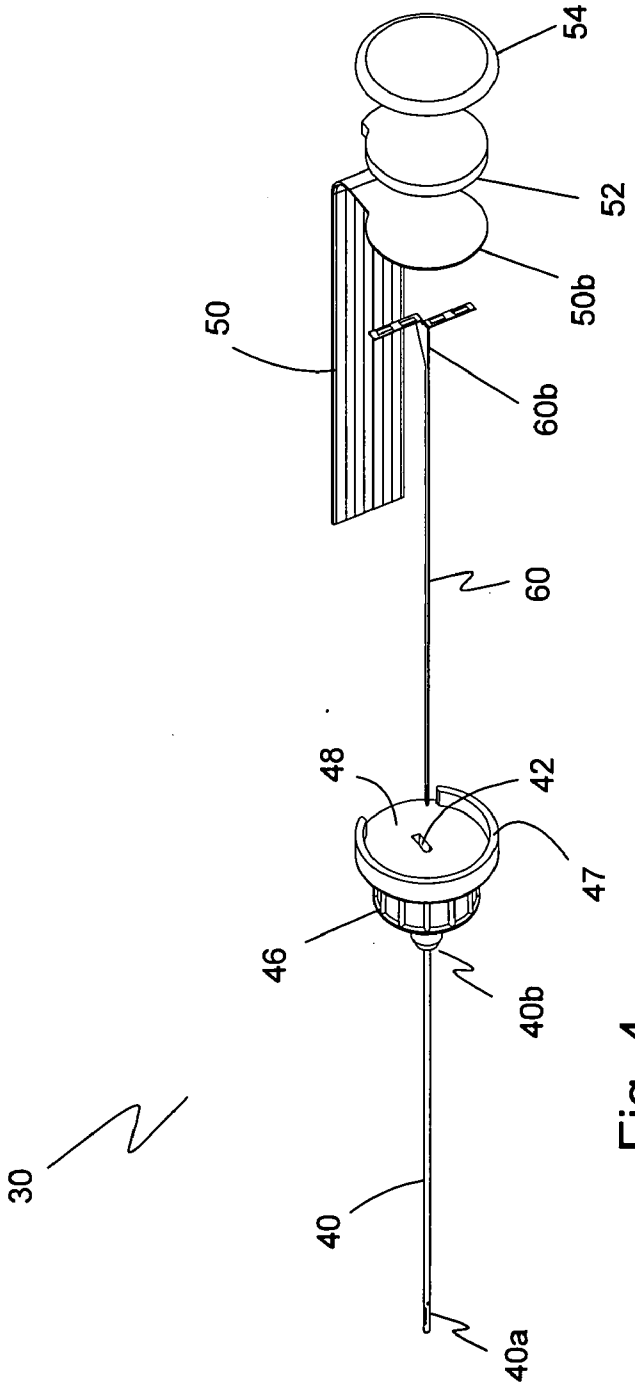

Fig. 4

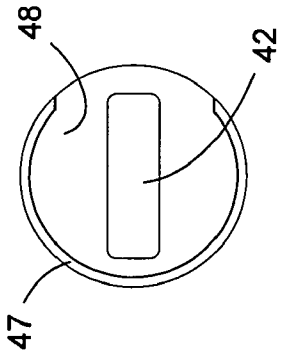

Fig. 5

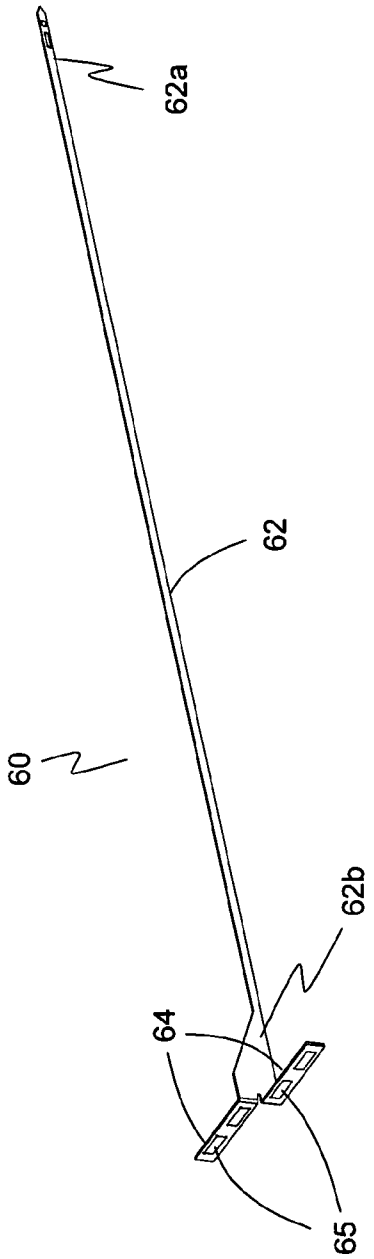

Fig. 6

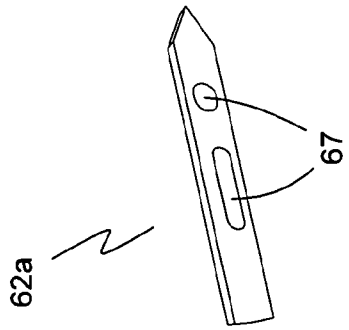

Fig. 8

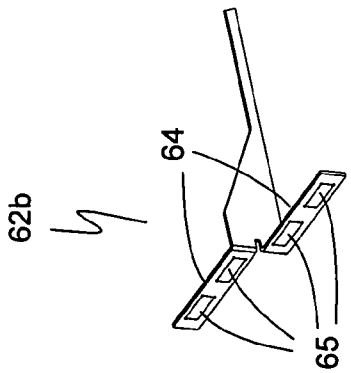

Fig. 7

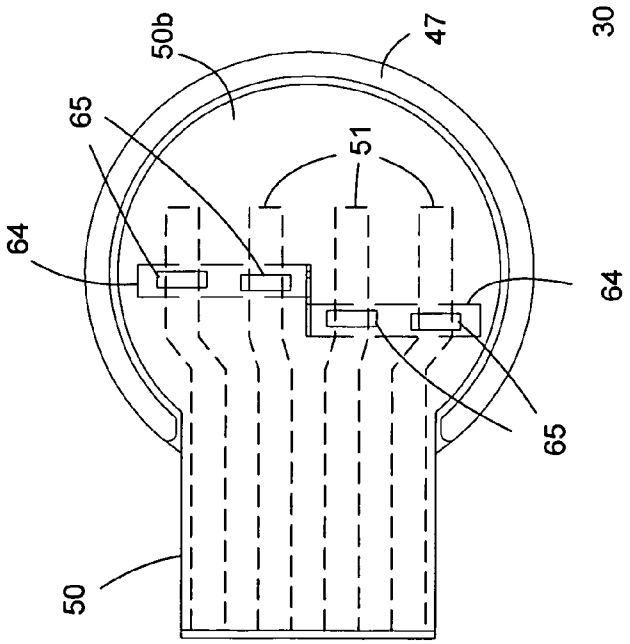

Fig. 9

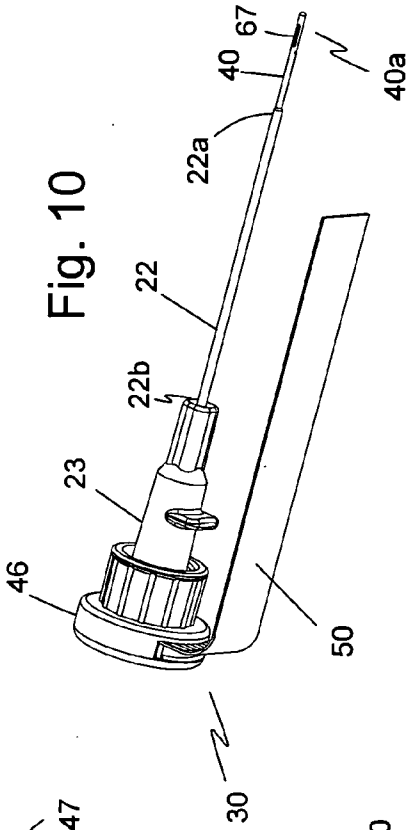

Fig. 10

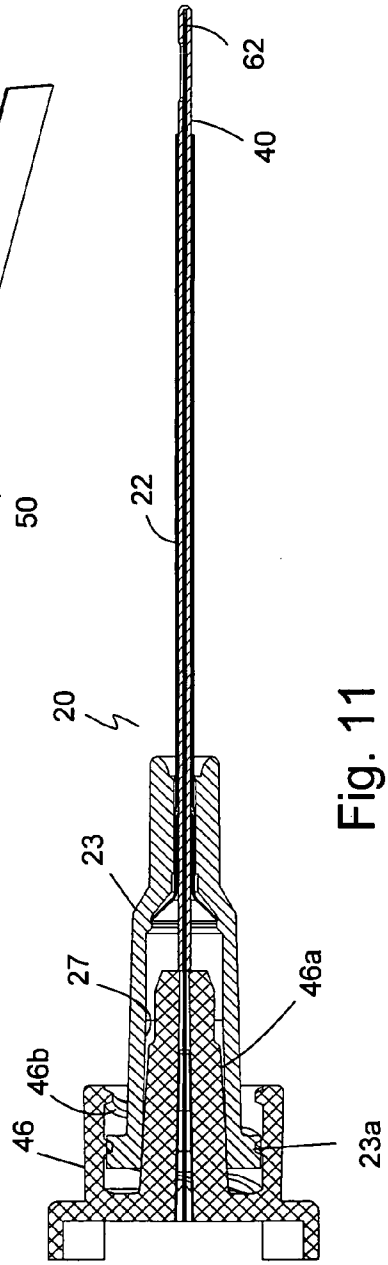

Fig. 11

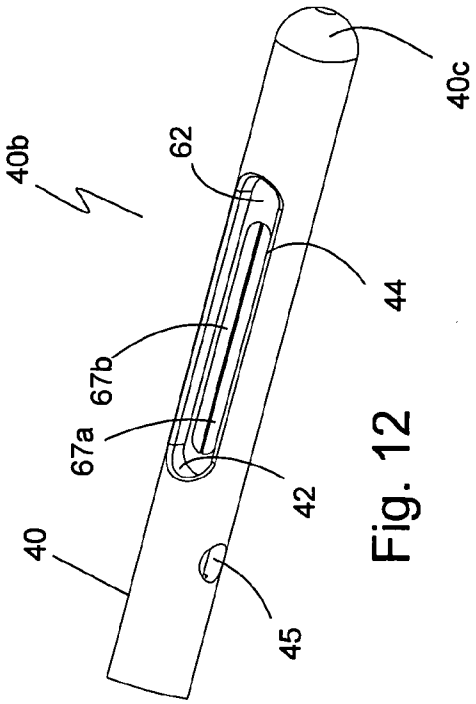

Fig. 12

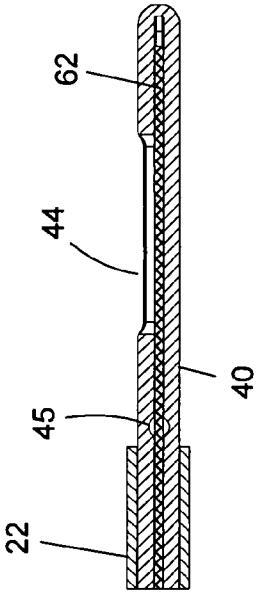

Fig. 14

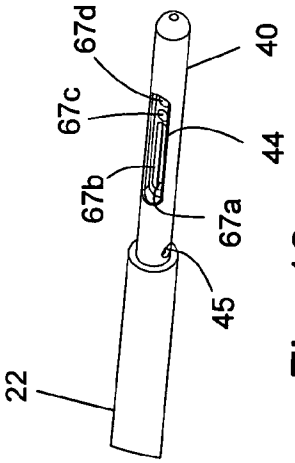

Fig. 13

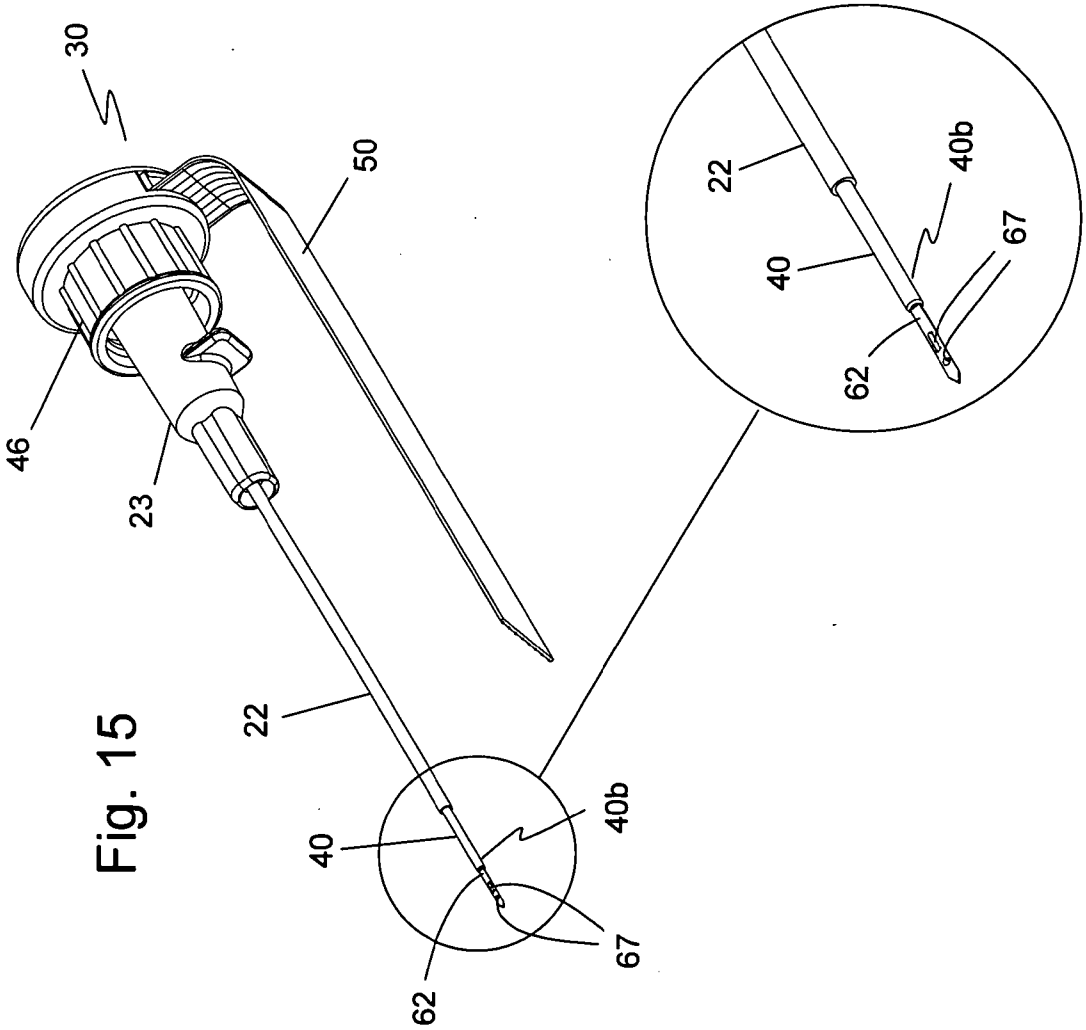

Fig. 15

Fig. 16

INTRAVASCULAR SENSOR AND INSERTION SET COMBINATION

BACKGROUND OF THE INVENTION

[0001] 1. Field of the Invention

[0002] The present invention relates generally to the field of medical devices. Particularly, the present invention relates to devices and methods for placing a sensor at a selected site within the body of a patient. More particularly, the present invention relates to an intravascular sensor and an insertion set therefor.

[0003] 2. Description of the Prior Art

[0004] In the past, it was discovered that tight glycemic control in critically ill patients yielded statistically beneficial results in reducing mortality of patients treated in the intensive care unit for more than five days. A study done by Greet Van den Berghe and associates (New England Journal of Medicine, Nov. 8, 2001) showed that using insulin to control blood glucose within the range of 80-110 mg/dL yielded statistically beneficial results in reducing mortality of patients treated in the intensive care unit for more than 5 days from 20.2 percent with conventional therapy to 10.6 percent with intensive insulin therapy. Additionally, intensive insulin control therapy reduced overall in-hospital mortality by 34 percent.

[0005] Attempts have been made in the past to monitor blood various analytes using sensors specific for the analytes being monitored. Most methods have involved reversing the direction of blood flow in an infusion line so that blood is pulled out of the patient's circulation at intervals, analyzed and then re-infused back into the patient by changing the direction of flow. A problem encountered in reversing an infusion line for sampling is determining how much blood should be withdrawn in order to be certain that pure, undiluted blood is in contact with the sensor.

[0006] U.S. Pat. No. 5,165,406 (1992; Wong) discloses a sensor assembly for a combination infusion fluid delivery system and blood chemistry analysis system. The sensor assembly includes a sensor assembly with each of the assembly electrodes mounted in an electrode cavity in the assembly. The system includes provision for delivering the infusion fluid and measuring blood chemistry during reinfusion of the blood at approximately the same flow rates.

[0007] U.S. Pat. No. 7,162,290 (2007; Levin) discloses a method and apparatus for periodically and automatically testing and monitoring a patient's blood glucose level. A disposable testing unit is carried by the patient's body and has a testing chamber in fluid communication with infusion lines and a catheter connected to a patient blood vessel. A reversible peristaltic pump pumps the infusion fluid forwardly into the patient blood vessel and reverses its direction to pump blood into the testing chamber to perform the glucose level test. The presence of blood in the testing chamber is sensed by a LED/photodetector pair or pairs. When the appropriate blood sample is present in the test chamber, a glucose oxidase electrode is energized to obtain the blood glucose level.

[0008] Although Levin discloses a method of halting the withdrawal of blood at the proper time so that a pure, undiluted sample is presented to the sensor, the method uses an expensive sensor and risks the possibility of contamination by the infusion process. Additionally, infusion of the flush solution has a diluting effect of the blood in the vicinity of the intravenous catheter and presents a time dependent function as to the frequency at which blood glucose can be measured.

[0009] Therefore, what is needed is a device that simplifies the measurement apparatus. What is also needed is a device that improves usability and limits the infusion fluid to the level required to clear the intravenous catheter site. What is further needed is a device that simplifies the procedures required of medical personnel to those closely related to existing accepted methods.

SUMMARY OF THE INVENTION

[0010] It is an object of the present invention to provide a device that simplifies the components needed for the measurement apparatus. It is another object of the present invention to provide a device that improves usability and simplifies the procedures to those closely related to existing accepted method known to medical personnel.

[0011] The present invention achieves these and other objectives by providing an intravascular sensor and insertion set combination and method for the placement of an indwelling sensor within an inserted intravenous catheter. The present invention includes a sensor assembly configured for use with commercially available intravenous insertion devices. The sensor assembly includes a sensor sheath having a diameter substantially similar to a commercially available catheter insertion needle so that the sensor sheath sealingly engages the distal end of the catheter when the sensor assembly is inserted into the catheter after removal of the insertion needle.

[0012] The sensor sheath contains a sensor having sensing elements disposed on a sensor shank adjacent a sensor distal end and electrical contacts at or adjacent a sensor proximal end. The sensor shank is sealingly embedded within the sensor sheath where the sensor elements are exposed at or adjacent the sensor distal end. The sensor sheath includes a hub configured for mating with the luer lock fitting on the catheter. A secondary seal is made at the luer fitting. The sensor may include one or more sensing elements on one side or on opposite sides of the sensor shank.

[0013] The sensor signals are transmitted to a monitor by cabling or by radio waves. An optional signal conditioning electronics may be included to receive the sensor signals by way of electrical leads from the sensor. Either hard wiring or a radio link communicates the sensor signals to a monitor, which processes the sensor signals and displays analytical values, trends and other patient related data for the measured analyte. A typical analyte is blood glucose. Blood glucose measurements are commonly used to determine insulin dosing in tight glycemic control protocols. Although blood glucose is an important blood component, other analytes are possible to measure within the constructs of the present invention.

[0014] One of the major advantages of the present invention is the combination with commercially-available IV catheters. This simplifies the procedure required of medical personnel since no additional special techniques are required for inserting the intravenous catheter. No highly specialized training is required since the procedures used by medical personnel to insert the intravascular sensor are closely related to existing accepted methods. Upon removal of the insertion needle, the sensor assembly of the present invention is simply inserted and locked into place using the luer lock fitting. Because the present invention is configured for use with commercially-

available IV catheters, no specially designed or customized insertion tools or devices are required to position the intravascular sensor in the patient.

BRIEF DESCRIPTION OF THE DRAWINGS

[0015] FIG. **1** is a plan view showing the general installation of the intravenous catheter and sensor on a patient in a direct connection to the monitor.

[0016] FIG. **2** is a plan view showing the general installation of the intravenous catheter and sensor on a patient in a radio communication connection to the monitor.

[0017] FIG. **3** is a perspective view of one embodiment of the present invention showing the intravascular sensor insertion set.

[0018] FIG. **4** is an exploded view of the assembled sensor and cable of the present invention shown in FIG. **3**.

[0019] FIG. **5** is an end view of the cable end of the hub of the present invention showing the cross section of the sensor sheath.

[0020] FIG. **6** is a perspective view of one embodiment of the sensor of the present invention showing contact wings.

[0021] FIG. **7** is an enlarged perspective view of the contact wings shown in FIG. **6**.

[0022] FIG. **8** is an enlarged perspective view showing the sensor element end in one embodiment of the sensor.

[0023] FIG. **9** is an enlarged end view of the hub of the present invention showing the connection between the cable and the connector end of the sensor.

[0024] FIG. **10** is a perspective view of one embodiment of the present invention showing the sensor assembly inserted into the intravenous catheter.

[0025] FIG. **11** is a cross-sectional view of the sensor inserted into the intravenous catheter.

[0026] FIG. **12** is an enlarged perspective view of one embodiment of the present invention showing the sheath with a side opening/window exposing the sensor elements.

[0027] FIG. **13** is an enlarged perspective view of another embodiment of the present invention showing the sensor and sheath end with the intravenous catheter where all sensor elements are on one side.

[0028] FIG. **14** is an enlarged cross-sectional view of the embodiment of the sensor assembly and intravenous catheter shown in FIG. **13**.

[0029] FIG. **15** is a perspective view of another embodiment of the present invention showing the sensor assembly inserted into the intravenous catheter where the sensor elements extend beyond the end of the sensor sheath.

[0030] FIG. **16** is an enlarged perspective view of the sensor elements shown in FIG. **15**.

DETAILED DESCRIPTION OF THE PREFERRED EMBODIMENT

[0031] The preferred embodiment(s) of the present invention is illustrated in FIGS. **1-16**. FIGS. **1** and **2** illustrate the overall environment of the present invention connected to an arm **1** of a patient. FIG. **1** shows, by way of example, a disposable sensor assembly **30** of the present invention inserted into the intravascular system of the patient, which has been inserted into a vein on the back of arm **1** above the wrist. A catheter assembly **20** (not shown) is preferably used with the present invention and together with the sensor assembly **30** make up one embodiment of the intravascular sensor insertion set **10** of the present invention. Additionally, other locational installations on the patient are possible and often used.

[0032] As shown in FIG. **1**, a sensor cable **50** emanates from the sensor assembly **30** and is attached to a conditioning electronics and a cable junction unit **70**. A monitor cable **72** electrically couples cable junction unit **70** to a monitor **4** mounted on a pole **6**. Such poles as pole **6** are often used to mount electronic equipment as well as intravenous drips and the like. Another common location for the monitor **4** is the bed rail. Monitor cable **72** and sensor cable **50** transmit electrical signals generated by the sensor assembly **30** directly to monitor **4** where the signals are processed and displayed for access by medical personnel. Cable junction unit **70** is shown for convenience, as it is possible for monitor cable **72** and sensor cable **50** to be a single entity. It should be noted that other mounting configurations other than mounting monitor **4** to pole **6** is possible. For instance, it is possible to mount monitor **4** to a bed rail, cart mount, or other convenient location and often desirable.

[0033] Like the illustration in FIG. **1**, FIG. **2** shows a sensor cable **50** emanating from the sensor assembly **30** and attached to a conditioning electronics and radio unit **70'**. The conditioning electronics and radio unit **70'** transmits electrical signals generated by the sensor assembly **30** to the monitor **4** where the signals are processed and displayed for access by medical personnel.

[0034] Turning now to FIG. **3**, there is illustrated one embodiment of the intravascular sensor insertion set **10** of the present invention. Sensor insertion set **10** includes sensor assembly **30** and catheter assembly **20**. Sensor assembly **30** includes a sensor sheath **40** sealingly connected to a sensor hub **46** from which sensor cable **50** extends. Catheter assembly **20** typically includes an insertion needle **24** disposed within a flexible catheter **22** and extends a predefined distance beyond a catheter distal end **22***a*. Sensor assembly **30** is preferably constructed to be insertable into a commercially available intravenous catheter assembly **20** that are typically available from a variety of medical suppliers. Some examples of these commercially available intravenous catheter assemblies include intravenous insertion catheters sold under the trademarks Introcan (manufactured by B. Braun) and Insyte Autoguard (manufactured by Becton Dickinson).

[0035] FIG. **4** is an exploded view of sensor assembly **30** shown in FIG. **3**. Sensor assembly **30** includes sensor sheath **40**, sheath hub **46**, a sensor **60**, and sensor cable **50**. Sensor sheath **40** includes a sheath distal end **40***a* and a sheath proximal end **40***b*. Sheath proximal end **40***b* is sealingly affixed to sheath hub **46**. Sensor sheath **40** includes an internal channel **42** that extends substantially the entire length of sheath **40** and receives sensor **60**. Sensor **60** has a shank proximal end **60***b* that is received within hub **46** against a hub surface **48** along with a sensor cable proximal end **50***b*. Sensor **60** and cable proximal end **50***b* are fixedly retained within hub **46** by a pressure applying component **52** and a pressure cap **54**. Pressure applying component **52** is optionally made from a resilient material such as a foam material that is placed over cable proximal end **50***b* to apply pressure between cable proximal end **50***b* and shank proximal end **60***b*. Pressure cap **54** provides the mechanism for maintaining the applied pressure and is preferably permanently affixed to hub **46**.

[0036] FIG. **5** is an enlarged plan view of hub surface **48**. Internal channel **42** has a cross-section that is suitable for receiving sensor **60** and can be any desired shape. Hub **46** optionally has a perimeter wall **47** around a major portion of

the circumference of hub surface **48**. Perimeter wall **47** facilitates attaching pressure cap **54** when capturing sensor **60**, cable proximal end **50***b* and pressure applying component **52**. Pressure cap **54** may be fixed to hub **46** by a snap fit, ultrasonic welding, chemical welding, or the like. Although cable **50** is shown as a flex circuit, it should be understood that other cable topologies are possible.

[0037] FIG. **6** shows one embodiment of sensor **60** of the present invention. Sensor **60** has a sensor shank **62** with a shank distal end **62***a* and shank proximal end **62***b*. Shank proximal end **62***b* has contact ears **64** that have been orthogonally folded outward from sensor shank **62**. Contact ears **64** carry electrical contact pads thereon, which are more clearly illustrated in FIG. **7**. Turning now to FIG. **7** there is illustrated an enlarged view of shank proximal end **62***b*. Contact ears **64** have exposed thereon a plurality of electrical contact pads **65**. By optionally configuring contact ears **64** as shown, electrical contact pads **65** are all facing in one direction facilitating connection to a single-sided sensor cable **50** such as a flex cable. FIG. **8** is an enlarged view of shank distal end **62***a*. Shank distal end **62***a* has one or more sensor elements **67**. Each of the one or more sensor elements **67** are electrically coupled to contact pads **65**, typically by embedding one or more electrically conductive pathways (not shown) within sensor shank **62** where the electrically conductive pathways are electrically isolated from each other. In this particular embodiment, sensor elements **67** of sensor **60** are on both sides. Other quantities of electrical contacts and sensor elements are considered within the scope of the present invention.

[0038] Turning now to FIG. **9**, there is illustrated an enlarged plan view of the electrical coupling assembly within hub **46**. Cable **50** has a plurality of electrical conductors **51** that terminate at cable proximal end **50***b*. A portion of electrical conductors **51** are exposed and overlay against electrical contacts **65** of contact ears **64**. As shown, cable proximal end **50***b* is preferably shaped to be captured within perimeter wall **47** of hub **46**. As previously disclosed, pressure applying component **52** (not shown) is positioned on top of cable proximal end **50***b*. In this embodiment, pressure applying component **52** has a thickness greater than the height of perimeter wall **47** so that pressure cap **54**, when installed, pushes pressure applying component **53** against cable proximal end **50***b* in order to maintain good electrical contact between electrical contacts **65** of contact ears **64** and the corresponding portions of exposed electrical conductors **51** at cable proximal end **50***b*.

[0039] Sensor assembly **30** positioned within catheter **22** is illustrated in FIG. **10**. Catheter **22** includes a luer fitting **23** attached permanently and hermetically to a catheter proximal end **22***b* to form a leak-proof entity. A catheter distal end **22***a* is tapered so that a liquid tight seal is formed between the inside diameter of catheter **22** and insertion needle **24** (not shown). The diameter of sensor sheath **40** is selected to be substantially the same as the diameter of insertion needle **24** so that, when sensor assembly **30** is inserted into catheter **22** after removal of insertion needle **24**, a liquid tight seal is also formed at catheter distal end **22***a* between catheter distal end **22***a* and sensor sheath **40**. As FIG. **10** illustrates, a sheath distal end **40***a* containing sensing elements **67** extends beyond catheter distal end **22***a* in order to expose sensing elements **67** to the sample fluid, i.e. the blood within the vein of the patient.

[0040] Luer fitting **23** removably connects to hub **46** of sensor assembly **30** in a similar fashion as the standard luer-lock connections known to those of ordinary skill in the art. FIG. **11** is a cross sectional view which particularly shows the luer lock interface between the luer taper **46***a* of the sheath hub **46** and the luer taper **27** of the luer lock fitting **23** of the intravenous catheter assembly **20**. The threads **23***a* of the luer lock fitting **23** of the intravenous catheter assembly **20** threadingly engages with the threads **46***b* of the sheath hub **46**.

[0041] Turning now to FIG. **12** there is illustrated an enlarged perspective view of one embodiment of the sensor elements **67** of sensor **60**. Sensor sheath **40** has a side opening **44**, i.e. window, near sheath distal end **40***b*. Two sensor elements **67***a*, **67***b* on sensor shank **62** are disposed at side opening **44**. In this embodiment, sheath distal end **40***b* has a sealed end **40***c*. Sensor sheath **40** also includes a cross-drilled opening **45** to provide access for disposing a sealant around sensor shank **62** and sheath channel **42** at sheath distal end **40***b* to form a liquid tight seal. It should be noted that sensor sheath **40** may optionally include additional side openings or windows to accommodate additional sensor elements to measure a plurality of blood analytes.

[0042] FIG. **13** shows another embodiment of sensor assembly **30** where all sensor elements **67***a*, **67***b*, **67***c*, and **67***d* are on the same side of sensor shank **62**. Sensor elements **67***a*, **67***b*, **67***c*, and **67***d* are positioned with sheath **40** to be located beneath sheath side opening **44**. Sheath **40** also includes cross-drilled opening **45** for applying sealant around sensor shank **62** and sheath channel **42** to form a liquid tight seal. FIG. **14** is a cross-section view of the embodiment in FIG. **13**. FIG. **14** more clearly shows the relational detail of sensor shank **62**, sheath side opening **44** and cross-drilled opening **45**.

[0043] FIG. **15** is a perspective view of another embodiment of the present invention. In this combination of sensor assembly **30** and catheter **40**, sensor elements **67** are not protectively disposed beneath a window in sensor sheath **40** but positioned on a portion of sensor shank **62** that extends beyond sheath distal end **40***b*. FIG. **16** is an enlarged detail view of the distal end of the embodiment in FIG. **15**. FIG. **16** more clearly shows the relational detail between sensor elements **67**, sensor shank **62**, sensor sheath **40**, and catheter **22**.

[0044] Because sensor **60** is positioned within sensor sheath **40**, sensor shank **62** may have a characteristic of being rigid or flexible or any degree of rigidity/flexibility. Preferably, sensor shank **62** is flexibly resilient to provide less susceptibility to damage during handling and use when configured for any embodiment of the present invention. The following is one example for fabricating a sensor **60** of the present invention.

[0045] Sensor Fabrication

[0046] Step 1. Obtain a sheet of polyimide film, preferably with a thickness of about 0.002 inches. One option to obtain such a polyimide film is to remove the copper layer from a sheet of polyimide flexible laminate available from E. I. du Pont de Nemours and Company, Cat. No. AP8525 under the trademark Pyralux®. Pyralux® AP double-sided, copper-clad laminate is an all-polyimide composite polyimide film bonded to copper foil. Chemical etching is the preferred method for removing the copper layer. The polyimide sheet will become the polyimide support substrate for the sensor elements **67** of the present invention.

[0047] Step 2. Apply liquid photoresist to both sides of the polyimide support substrate, expose the photoresist to UV

light in a predefined pattern, and remove the unexposed areas to create a pattern for metal deposition. It should be understood that the preferred embodiment of the present invention has sensor elements **67** on both sides of the support substrate but that a single-sided sensor can also be made and is within the scope of the present invention. It is also understood that isolated electrically-conductive pathways are defined in the pattern between each sensor element **67** and a corresponding electrical contact **65**. A single sheet of polyimide support substrate provides a plurality of sensors **60**. Typically, one side contains the defined two electrodes per sensor (referred to as the top side) while the opposite side contains the reference and/or counter electrodes (referred to as the backside).

[0048] Step 3. Coat both sides with one or more layers of electrically conductive materials by vacuum deposition. Acceptable electrically conductive materials include platinum, gold, and the like. Preferably, platinum with a layer of titanium deposited thereon is used for the present invention.

[0049] Step 4. Remove the photoresist including the electrically conductive material on top of the photoresist surface leaving a pattern of electrically conductive material on the polyimide surfaces.

[0050] Step 5. Apply an insulation layer to both sides of the modified polyimide sheet preferably by lamination. The insulation layer is preferably a flexible photoimageable coverlay available from E. I. du Pont de Nemours and Company as Pyralux® PC. Pyralux® PC is a flexible, dry film solder mask used to encapsulate flexible printed circuitry. The dry film can be used as a solder mask by patterning openings using conventional printed circuit exposure and development processes. Unexposed areas can be developed off as explained in the technical information brochure provided by Dupont. For the present invention, Pyralux® PC 1015 was used. Expose the insulation layer to UV light and wash out the unexposed portions of the insulation layer. Thermally cure the remaining insulation layer/dry film. The cured remaining insulation layer serves as not only an insulation layer but also forms the wells to confine and contain the dispensed layers disclosed below.

[0051] Step 6. Remove the titanium in the areas exposed by the insulation layer using aqueous hydrofluoric acid, which also conveniently removes any surface contaminants from the previous process.

[0052] Step 7. Deposit silver onto the electrodes defined by the electrically conductive material pattern on the backside of the polyimide support substrate, and subsequently convert a portion to silver chloride to create a Ag/AgCl electrode, which will serve as counter and reference electrode.

[0053] Step 8. Deposit a semi-permeable membrane to the two electrodes per sensor defined on the top side (i.e. glucose electrode and blank electrode) by electropolymerization.

[0054] Step 9. Deposit a hydrogel membrane onto the Ag/AgCl counter and reference electrode on the backside of the sheet by dispensing a predefined amount of hydrogel membrane solution, followed by UV curing and washing.

[0055] Step 10. Deposit a poly-2-hydroxyethyl methacrylate (PHEMA) membrane precursor solution onto the two electrodes per sensor defined on the top side, UV cure, wash and dry. It should be understood by those skilled in the art that one of the two electrodes is a glucose electrode and, accordingly, the PHEMA membrane precursor solution for this electrode additionally contains a glucose enzyme, preferably glucose oxidase.

[0056] Step 11. Deposit a composite membrane precursor solution onto the glucose electrode and the blank electrode, UV cure and dry. The preparation of the composite membrane precursor solution will now be described. Microspheres are prepared from a material having substantially no or little permeability to glucose but a substantially high permeability to oxygen. The microspheres are preferably prepared from PDMS (polydimethylsiloxane). The microspheres are mixed with a hydrogel precursor that allows the passage of glucose. While polyurethane hydrogels work, a PHEMA precursor is preferred. The ratio of microspheres to hydrogel determines the ratio of the glucose to oxygen permeability. Thus, one of ordinary skill in the art can easily determine the ratio that enables the desired dynamic range of glucose measurement at the required low oxygen consumptions. It should be noted that if a polyurethane hydrogel is used, the membrane is cured by evaporating the solvent instead of using ultraviolet light.

[0057] Step 12. Optionally deposit additional PHEMA membrane precursor solution to the glucose and blank electrode, UV cure and dry. This optional step adds catalase that prevents release of hydrogen peroxide to the biological environment, reduces flow rate influence on sensor sensitivity and prevents direct contact of the microspheres surface to the biological environment.

[0058] Step 13. Cut the polyimide sheet into individual sensors **60**.

[0059] The individual sensors **60** are then assembled into the sensor sheath **40** according to the preferred embodiments previously described.

[0060] Although the preferred embodiments of the present invention have been described herein, the above description is merely illustrative. Further modification of the invention herein disclosed will occur to those skilled in the respective arts and all such modifications are deemed to be within the scope of the invention as defined by the appended claims.

What is claimed is:

1. An intravascular sensor assembly insertable into an intravenous catheter, the sensor assembly comprising:

a sheath having a sheath proximal end and a sheath distal end wherein an outer diameter of the sheath is sized to be substantially equal to the outer diameter of an insertion needle of the intravenous catheter;

a hub sealingly connected to the sheath proximal end, the hub adapted for removably coupling to the intravenous catheter;

a sensor disposed within the sheath, the sensor having a sensor shank with a shank distal end and a shank proximal end, a plurality of sensor elements including a working electrode with a reagent matrix disposed thereon, the reagent matrix comprising an enzyme capable of catalyzing a reaction involving a substrate for the enzyme and a reference electrode, the plurality of sensor elements disposed adjacent the shank distal end, a plurality of connector pads disposed at the shank proximal end wherein the plurality of connector pads are contained within the hub and the plurality of sensor elements are exposed adjacent the sheath distal end, and a plurality of elongated conductive elements wherein each of the plurality of conductive elements electrically couples one of the plurality of sensor elements to one of the plurality of connector pads; and

a cable electrically coupled to the plurality of connector pads.

2. The sensor of claim **1** wherein the plurality of sensor elements and the shank distal end are exposed beyond the sheath distal end.

3. The sensor of claim **1** wherein the plurality of sensor elements is exposed at an opening in the sheath adjacent the sheath distal end.

4. The sensor of claim **1** wherein the plurality of sensor elements is exposed at orthogonal openings on opposite sides of the sheath adjacent the sheath distal end.

5. The sensor of claim **1** wherein the sensor shank has a plurality of contact ears disposed substantially perpendicular to the longitudinal axis of the sensor shank and having the connector pads exposed thereon.

6. The sensor of claim **5** wherein the contact ears are seated against a reference face within the hub at a base of the hub adjacent a sheath-hub interface.

7. The sensor of claim **1** wherein the hub further includes a resilient component disposed within the hub against the cable and a pressure cap fixedly attached to the hub and sized to provide pressure on the resilient component causing the cable and the connector pads to remain in intimate electrical contact.

8. The sensor of claim **1** further includes conditioning electronics coupled to the cable, the conditioning electronics communicatingly coupled to a monitor.

9. In combination, an intravascular sensor assembly and an intravenous catheter assembly, the combination comprising:

an intravenous catheter assembly comprising an intravenous catheter and an intravenous insertion needle removably and slidably disposed within the intravenous catheter; and

an instravascular sensor assembly comprising a sheath, a hub sealingly connected to a proximal end of the sheath, and a sensor sealingly disposed within the sheath wherein the sensor has a plurality of sensor elements including a working electrode with a reagent matrix disposed thereon, the reagent matrix comprising an enzyme capable of catalyzing a reaction involving a substrate for the enzyme and a reference electrode, the plurality of sensor elements disposed adjacent the shank distal end, a plurality of connector pads disposed at the shank proximal end wherein the plurality of connector pads are contained within the hub and the plurality of sensor elements are exposed adjacent the sheath distal end, and a plurality of elongated conductive elements wherein each of the plurality of conductive elements electrically couples one of the plurality of sensor elements to one of the plurality of connector pads, and a cable electrically coupled to the plurality of connector pads;

wherein the intravascular sensor assembly is removably and sealingly insertable into the intravenous catheter after removal of the insertion needle.

10. The combination of claim **9** wherein the plurality of sensor elements and the shank distal end are exposed beyond the sheath distal end.

11. The combination of claim **9** wherein the plurality of sensor elements is exposed at an opening in the sheath adjacent the sheath distal end.

12. The combination of claim **8** wherein the plurality of sensor elements is exposed at orthogonal openings on opposite sides of the sheath adjacent the sheath distal end.

13. The sensor of claim **9** wherein the sensor shank has a plurality of contact ears disposed substantially perpendicular to the longitudinal axis of the sensor shank and having the connector pads exposed thereon.

14. The sensor of claim **13** wherein the contact ears are seated against a reference face within the hub at a base of the hub adjacent a sheath-hub interface.

15. The sensor of claim **9** wherein the hub further includes a resilient component disposed within the hub against the cable and a pressure cap fixedly attached to the hub and sized to provide pressure on the resilient component causing the cable and the connector pads to remain in intimate electrical contact.

* * * * *