US 20070093754A1

(19) United States

(12) Patent Application Publication

(10) Pub. No.: US 2007/0093754 A1

(43) Pub. Date: Apr. 26, 2007

Mogensen et al.

(54) **INVISIBLE NEEDLE**

(76) Inventors: **Lasse W. Mogensen**, Soborg (DK); **Orla Mathiasen**, Soro (DK)

Correspondence Address:
BRINKS HOFER GILSON & LIONE
P.O. BOX 10395
CHICAGO, IL 60610 (US)

(21) Appl. No.: **11/519,137**

(22) Filed: **Sep. 11, 2006**

Related U.S. Application Data

(60) Provisional application No. 60/716,222, filed on Sep. 12, 2005.

(30) **Foreign Application Priority Data**

Sep. 12, 2005 (EP) ..... EP 05 197 774.8

Publication Classification

(51) **Int. Cl.**
A61M 5/178 (2006.01)
A61M 5/00 (2006.01)
A61M 25/00 (2006.01)

(52) **U.S. Cl.** **604/164.01**; 604/181; 604/164.12; 604/264

(57) **ABSTRACT**

The invention relates to an inserter for an infusion set for intermittent or continuous administration of a therapeutical substance, such as e.g. insulin. The inserter comprises a needle hub comprising an insertion needle and two spring units assuring automatic insertion and automatic retraction of the insertion needle.

The inserter comprises a housing (**1**), a carrier body (**2**) carrying an infusion part (**8**), a needle hub (**3**), a first moving unit (**4**) bringing the carrier body (**2**) to a forward position and a second moving unit (**5**) bringing the carrier body (**2**) to a retracted position. The inserter is characterized in that it has means for activation which should be activated at least once in order to bring the carrier body (**2**) from a retracted to a forward position, and back from the forward to the retracted position.

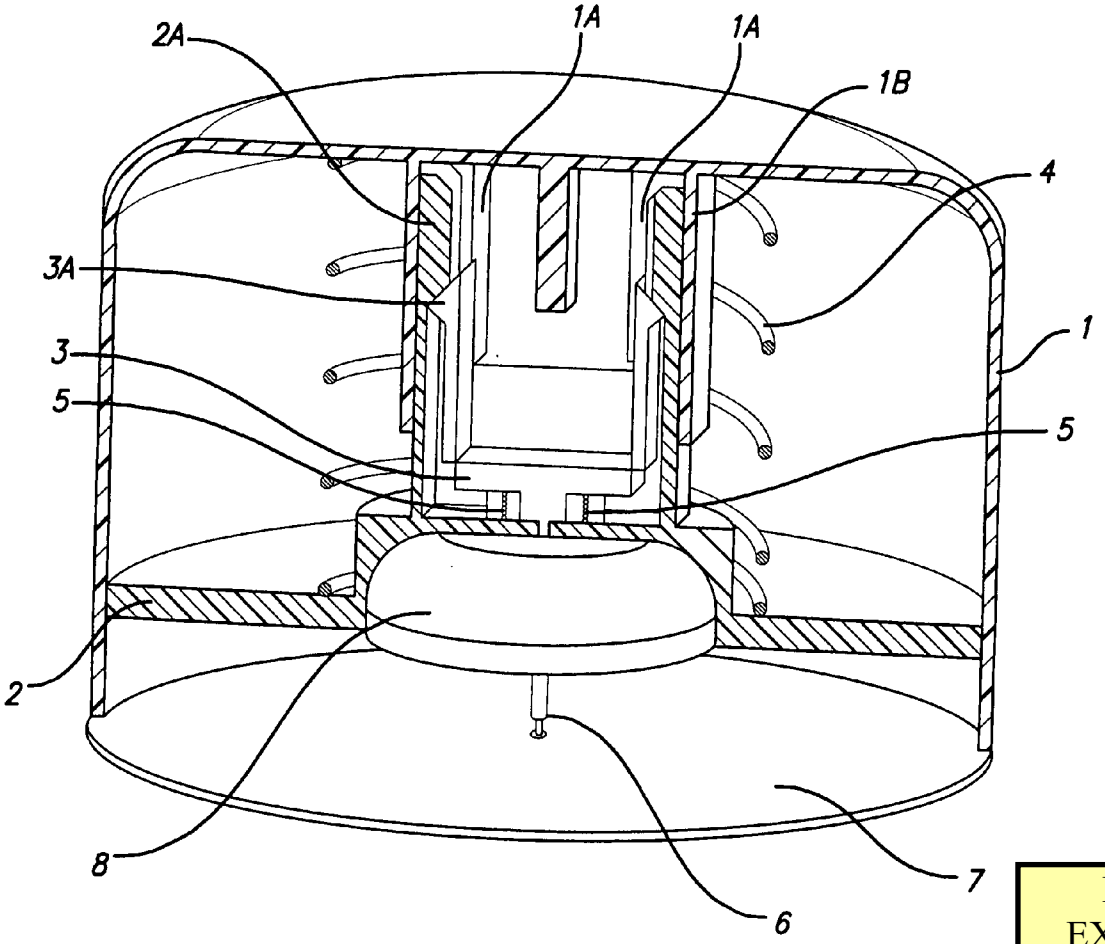

DEXCOM
EXHIBIT 1031

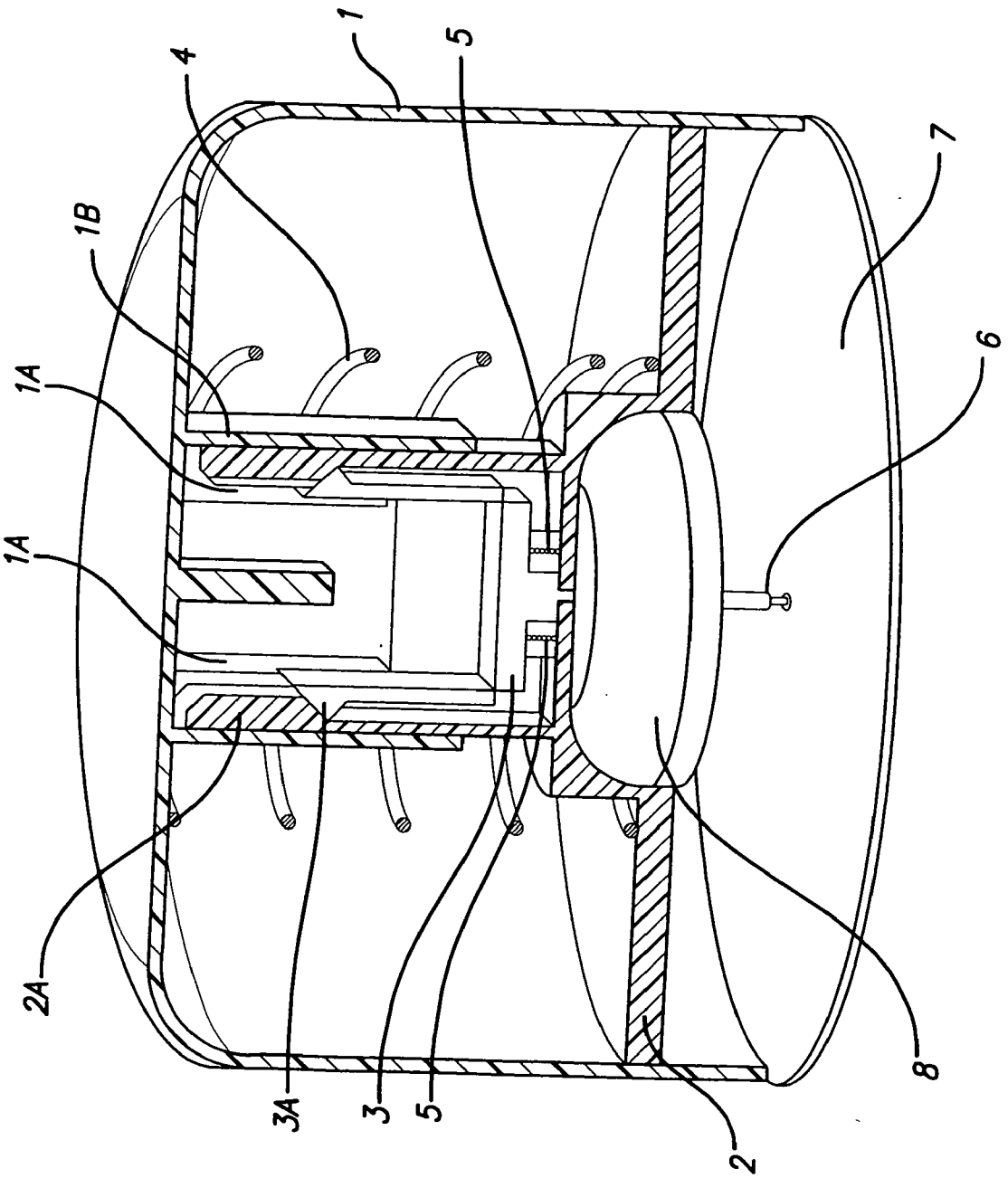

FIG. 1

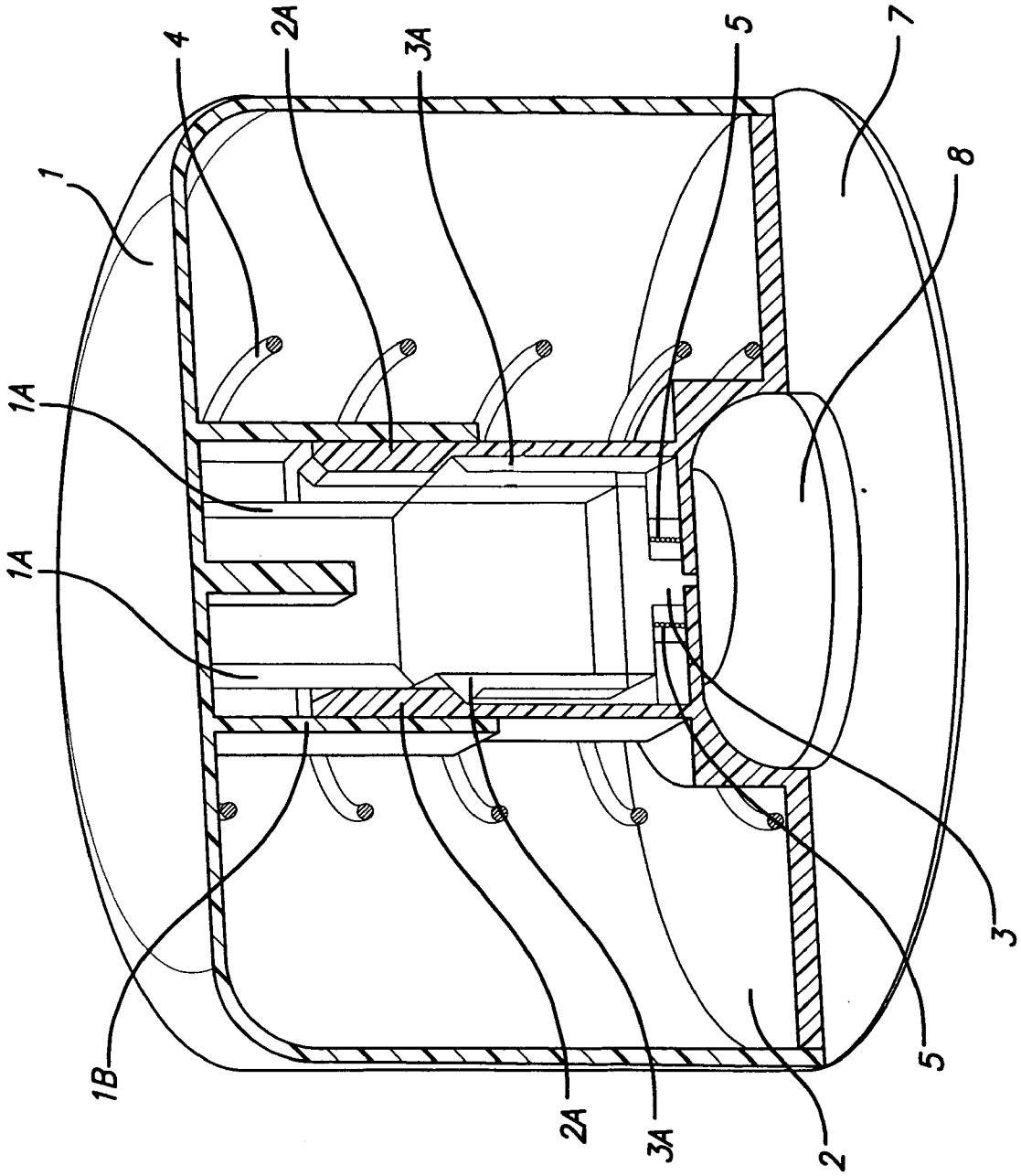

FIG. 2

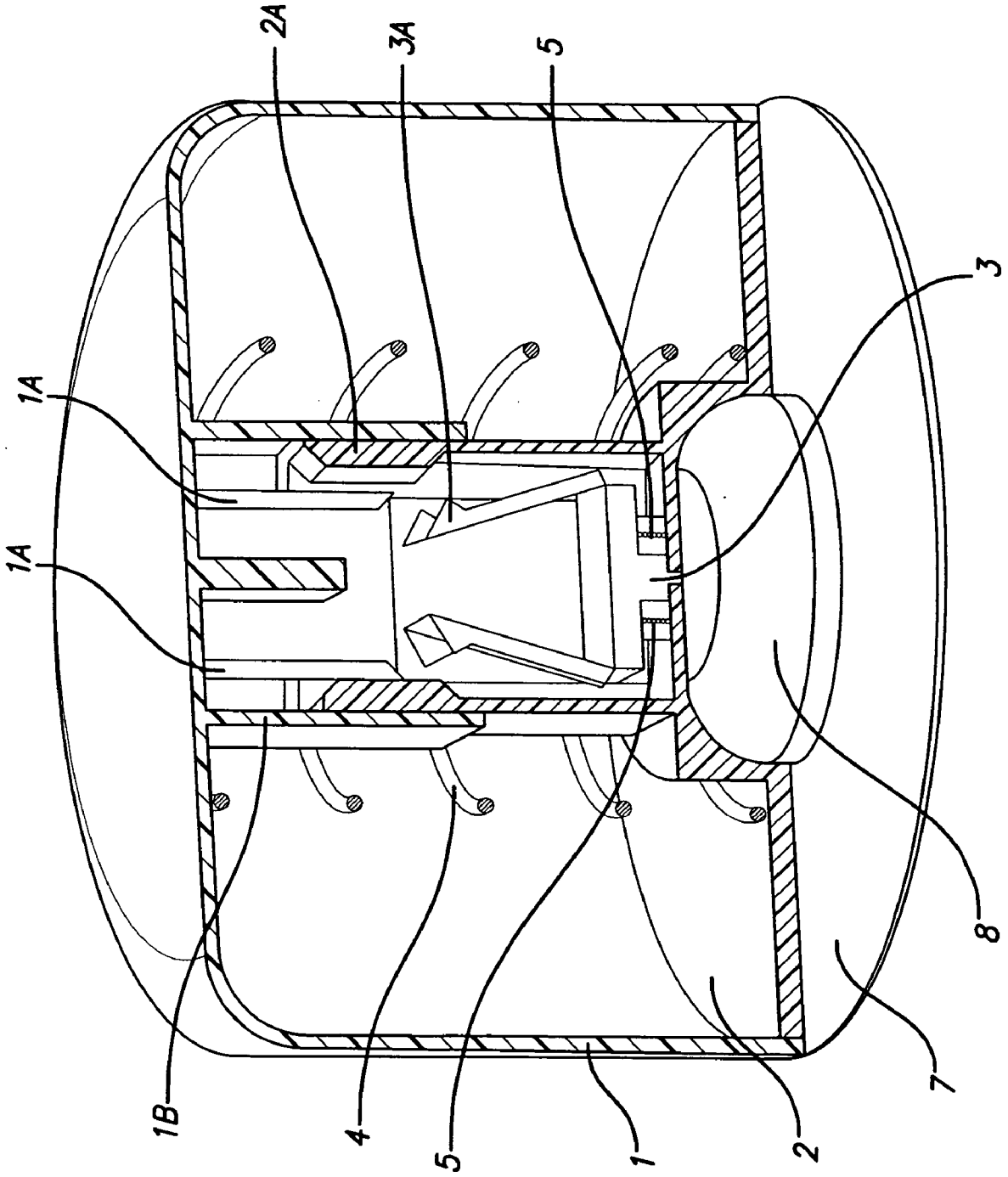

FIG. 3

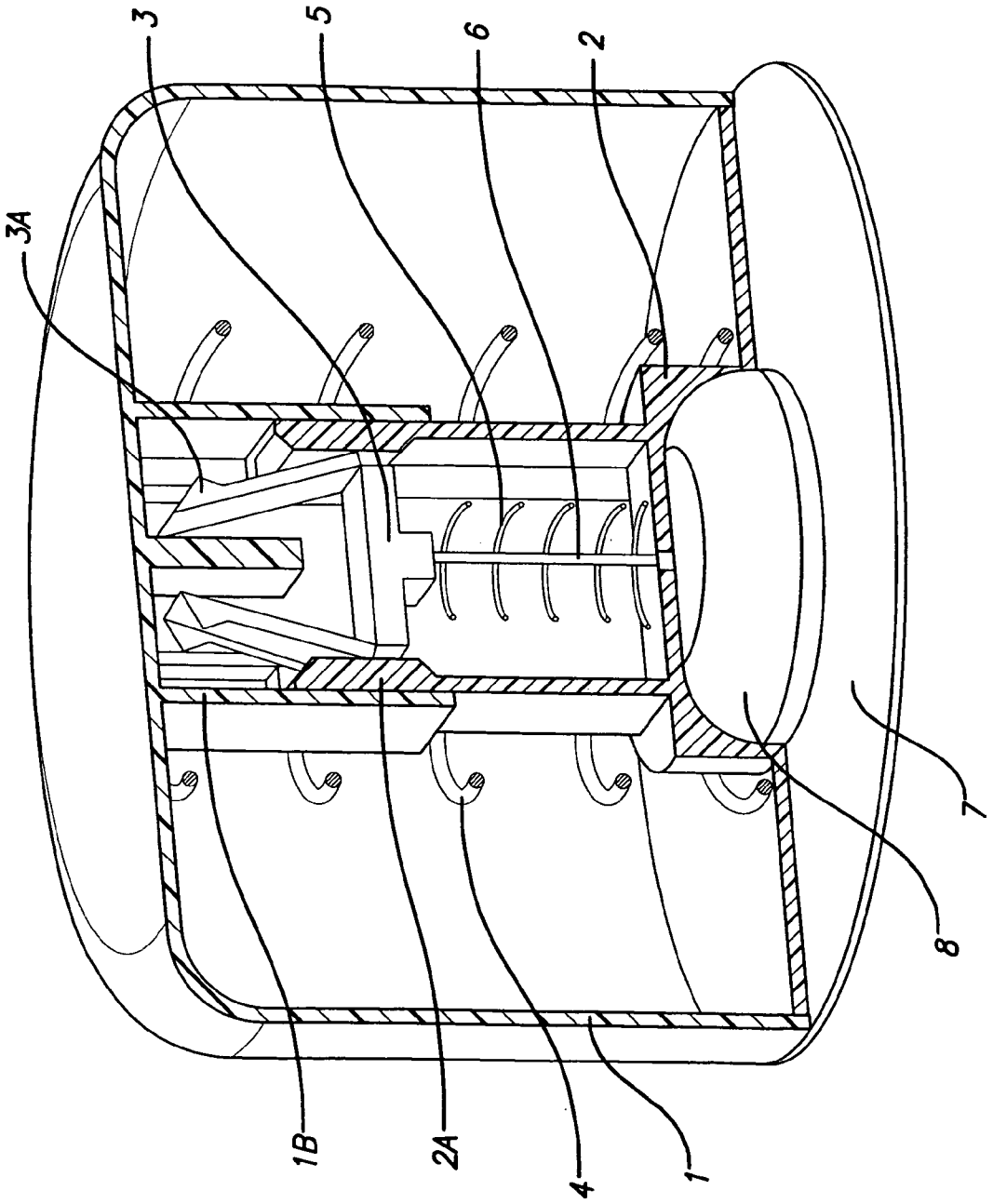

FIG. 4

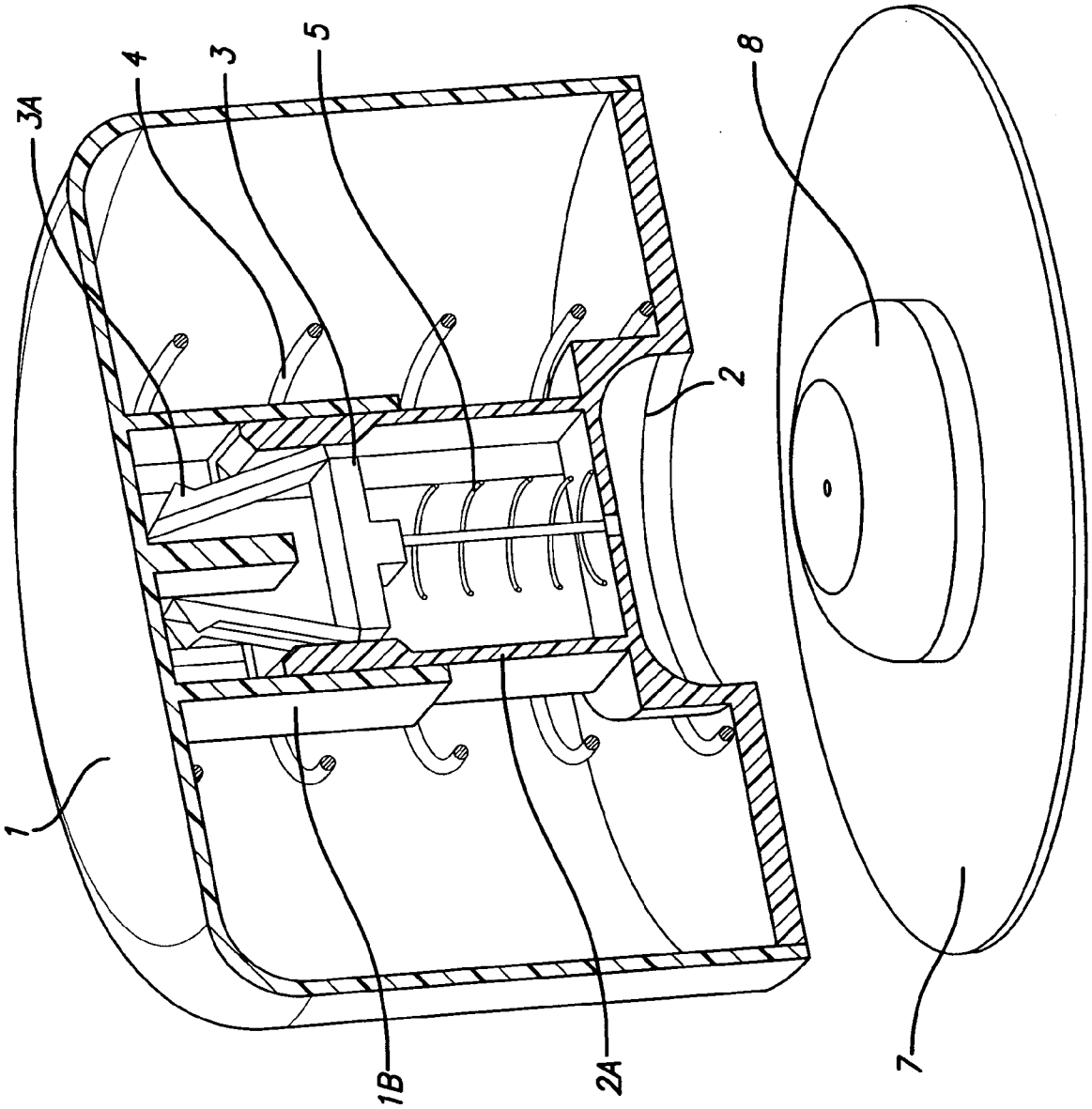

FIG. 5

INVISIBLE NEEDLE

[0001] This application claims the benefit of U.S. Provisional Application Ser. No. 60/716,222, filed Sep. 12, 2005, and EP Patent Application No. 05 197 774.8, filed Sep. 12, 2005, which are incorporated herein in their entirety.

TECHNICAL FIELD

[0002] The invention relates to an inserter for an infusion set for intermittent or continuous administration of a therapeutical substance, such as e.g. insulin. The inserter comprises a needle hub comprising an insertion needle and two spring units assuring automatic insertion and automatic retraction of the insertion needle.

BACKGROUND OF THE INVENTION

[0003] The document U.S. Pat. No. 6,387,078 pertains to an automatic injection apparatus which injects a single, pre-measured dose of stored medicine intramuscularly or transdermally, and the injection apparatus automatically retracts the hypodermic needle into the device after the injection is completed. The user presses the distal end i.e. the needle end, of the device onto the desired injection site and presses the actuation button. This releases the plunger-syringe-combination from its temporary engagement with the housing. The plunger-syringe-combination together with the spring-to-plunger-coupling are then forced away from the proximal end, i.e. the actuation end, of the housing by an energized driver spring. The driver spring propels the plunger-syringe-combination forward through the bore of the housing until the hypodermic needle exits the housing, and enters the recipient's tissue, and the syringe barrel touches the interior distal end of the housing. During this movement, a return spring positioned between the syringe assembly and the fixed, distal end of the housing becomes compressed and energized. When the liquid of the automatic injection apparatus is discharged by the plunger being pushed forward through the interior of the syringe barrel, the spring-to-plunger-coupling comes into contact with a splitter which disengages the driver spring from the plunger. Without the influence of the driver spring upon the plunger-syringe-combination, the energized return spring forces the plunger-syringe-combination to retreat rearward towards the proximal end of the device until the hypodermic needle is fully retracted into the housing.

[0004] As this automatic injection apparatus is directed toward injections of a pre-measured dose of stored liquid medicine where the plunger during injection pushes the liquid dose of stored medicine out of the apparatus, the solution will not be applicable for use when inserting an injection device as the handling and injection of a liquid under sterile conditions necessitates a complicated injection apparatus which need to interact with the liquid.

[0005] WO 2005/046780 (FIG. **97-102**) describes a device used for automatic insertion of a cannula of an infusion device into the skin of a patient, and afterwards automatic retraction of the insertion needle. The insertion device has the form of an oblong cylinder (length≈4× diameter) which is open in one end (**1984**) and provided with means for activation at the other end (**1952**). When the infusion set has been loaded onto the needle (**1968**) the lock member (**1962**) is moved in direction of the end provided with means for activation by the patient using projections (**1974**) which projections are accessible through a slot (**1976**) of the housing until barbs (**1956**) of the lock member (**1962**) engage an outer surface of the housing (page 26, I. 24-27). Then the open end (**1984**) is placed against the skin of the patient and the means for activation (**1952**) is activated. When activated shoulders (**1954**) on the means for activation engage, the barbs (**1956**) are pushed toward each other in order to disengage the barbs from the housing. When the barbs are clear of the housing the lock member, the needle hub, the retainer body and the associated infusion device are moved by a first spring in direction of the open end (**1984**). The inserter device moves the infusion device towards the skin of the patient thereby inserting the needle and the cannula of the infusion device. As the cannula is fully inserted, barbs (**1964**) of the needle hub (**1965**) engage ramped surfaces (**1972**) of the sleeve (**1982**), causing the barbs (**1964**) to be forced toward one another. When the barbs (**1964**) have been forced sufficiently inwardly to clear ends (**1988**) of the main body (**1980**), the second spring (**1966**) then moves the needle hub (**1965**) in the direction of the activation means (**1952**). Thus the needle is removed from the infusion device leaving the infusion device in place on the skin while the retainer body remains in a position adjacent the open end of the sleeve so that once the insertion device is removed from the skin of the patient, the retainer body protects the patient from further contact with the needle.

[0006] This insertion device is rather complex and the length of the device is defined by the individual units forming the functional parts of the device as these units have to be placed more or less end to end. A feature illustrating the complexity of the unit is the fact that the two springs respectively biases the housing from the lock member and the retainer body from the needle hub while a main body is placed between the two spring systems to transfer the force from the first spring to the second spring.

[0007] According to the present invention the two spring units work directly together, as the first spring unit directly affects the movement of the carrier body while the second spring system is directly affected by the movement of the carrier body. That the spring units directly affect or is directly affected by the carrier body means that the spring units are connected to the carrier body directly or through a part which transfers the power either unchanged or under controlled modifications.

DESCRIPTION OF INVENTION

[0008] The object of the invention is to provide a simple, non-expensive inserter for an infusion device which inserter would be easy and safe for the user to handle during use and safe to dispose of after use.

[0009] The invention concerns an inserter for an infusion set comprising a housing, a carrier body carrying an infusion part, a needle hub, a first moving unit bringing the carrier body to a forward position and a second moving unit bringing the carrier body to a retracted position, where the inserter has means for activation which should be activated at least once in order to bring the carrier body from a retracted to a forward position, and back from the forward to the retracted position.

[0010] In a preferred embodiment the inserter has means for activation which has to be activated only once in order

both to bring the carrier body from a retracted to a forward position, and back from the forward to the retracted position.

[0011] Preferably the first moving unit and the second moving unit are placed at least partly parallel to each other, where "parallel" is understood as not being "serially". "Serially" means that one moving unit is placed in extension of the other as described e.g. in WO 2005/046780. When the moving units are placed at least partly parallel they could be placed beside each other i.e. they extend over the same length or partly over the same length, or one unit could be placed inside the other if e.g. one of the units is of a kind presenting a hollow centre such as a helical spring.

[0012] In a preferred embodiment the first moving unit and the second moving unit are placed at least partly parallel to each other inside the housing.

[0013] The invention also comprises an inserter for an infusion set comprising a housing, a carrier body carrying an infusion part, a needle hub, a first spring unit and a second spring unit, where

[0014] the housing is provided with guiding means on the internal surface for guiding the movement of the carrier body,

[0015] the needle hub comprises an insertion needle for piercing of the skin,

[0016] the carrier body has a retracted and a forward position, and in the retracted position before insertion the carrier body and the needle hub are locked to each other,

[0017] the carrier body is provided with guiding means corresponding to the guiding means on the housing,

[0018] the first spring unit is biasing the housing and the carrier body and the second spring unit is biasing the carrier body and the needle hub.

[0019] In a preferred embodiment the first and the second spring unit are both connected to a distal surface of the carrier body.

[0020] In another preferred embodiment the carrier body stays in a forward position after insertion of the needle.

[0021] In another preferred embodiment the infusion part is provided with an adhesive proximal surface.

[0022] In another preferred embodiment the infusion part is provided with an adhesive distal surface.

[0023] In another preferred embodiment an adhesive pad is releasably fastened to a proximal part of the housing, and the adhesive pad can cover a proximal opening of the housing through which the infusion part will be conveyed.

[0024] In another preferred embodiment the first spring unit and the second spring unit respectively comprises one compression spring.

[0025] In another preferred embodiment the carrier body is provided with at least one inclined surface which surface is in contact with a rotating part of the needle hub, which rotating part can rotate in relation to the main part of the needle hub to which the insertion needle is fastened, and the housing is provided with a member preventing the rotating part of the needle hub from rotating when the carrier body is in a retracted position.

[0026] The invention also comprises a method for inserting an infusion part where the infusion part is releasably fastened to a needle hub and the needle hub is releasably fastened to a carrier body which carrier body carries the infusion part from a retracted to a forward position, where

[0027] a biased spring unit activated by the user, moves the carrier body, the needle hub and the infusion part forward from a retracted position, until a proximal surface of the infusion part contacts the patients skin or contacts a part connected to the patients skin;

[0028] at this forward position the needle hub is released from the carrier body and a biased spring unit moves the needle hub away from the carrier body resulting in the retraction of the needle hub; then the infusion part is released from the carrier body and the housing—including the carrier body and the needle hub—is removed from the patient.

DESCRIPTION OF THE DRAWINGS

[0029] The invention is explained in greater detail below with reference to the accompanying drawings wherein a preferred embodiment of the invention is shown.

[0030] FIG. **1** is a side view of an embodiment of the inserter of the invention where the carrier body and the infusion device are in a retracted position;

[0031] FIG. **2** is a side view of the inserter with the carrier body and the infusion device in an advanced position where the needle hub is locked to the carrier body;

[0032] FIG. **3** is a side view of the inserter with the carrier body and the infusion device in an advanced position where the needle hub has been released from the carrier body;

[0033] FIG. **4** is a side view of the inserter with the carrier body and the infusion device in an advanced position where the needle hub is in a retracted position;

[0034] FIG. **5** is a side view of the inserter after the inserter has been removed from the patient leaving the infusion part on the patient's skin.

[0035] In this document "distal" describes a surface or a part turned away from or placed away from the patient when the inserter is positioned with the needle end toward the patient. "Proximal" describes a surface or a part turned in direction of or placed close to the patient.

[0036] The embodiment of the inserter in FIG. **1** has a housing **1** with a length a little smaller than the diameter (length≈1× diameter). The design of this inserter is mainly defined by the use and not by the constructional units inside the inserter. The constructional units of the device are few and small, and the design of the inserter such as size and shape, results from a wish of making the device easy to store and easy to handle for a user, even if the user has reduced dexterity of the hands.

[0037] The inserter comprises a carrier body **2** with at least two locking members **2***a* protruding from a distal surface of the carrier body. A needle hub **3** is placed between the two locking members **2***a*, and the needle hub is provided with members **3***a* protruding from a distal surface of the needle hub and corresponding to the locking means **2***a* of the carrier body **2**. These protruding members **3***a* can rotate towards the center of the device along an axis through which they are also fastened to the main part of the needle hub **3**. Further

the needle hub is provided with an insertion needle **6** protruding from a proximal surface of the needle hub. Before insertion an infusion part **8** is fastened to the carrier body **2**, the infusion part is provided with a cannula which is adjoined to the insertion needle in such a way that insertion of the needle **6** will result in insertion of the cannula. An adhesive pad **7** with an adhesive proximal surface covers the proximal opening of the housing **1**. The adhesive surface of the pad **7** will normally be covered with a release liner in order to protect the adhesive surface.

[**0038**] During insertion the needle hub **3** is moved from a retracted position, to a forward position and back to a retracted position by a system of springs. The system in FIG. **1-5** comprises two springs, a first spring **4** and a second spring **5**. According to Hooke's law the force exerted by a spring depends on displacement of the spring x and of the spring constant k: $F_{spring}=-k\,x$. Each of the springs **4** and **5** can be replaced by more than one spring, then the spring unit replacing e.g. the first spring **4** shown in FIG. **1-5**, would exert the force:

$$F_{spring} = (-k_1)\cdot x_1 + (-k_2)\cdot x_2 + \ldots + (-k_n)\cdot x_n \overset{as\ x_1=x_2=x_n}{=} -(k_1 + k_2 + \ldots + k_n)\cdot x$$

where k_1, k_2, . . . ,k_n are the spring constants for the individual springs, and

$$F_{spring}=-k\,x, \text{ where } k=k_1+k_2+\ldots+k_n.$$

[**0039**] The first spring **4** and the second spring **5** can comprise both compression and tension springs.

[**0040**] In the embodiment of FIG. **1-5**, the housing **1** is provided with guiding means **1***a* and **1***b*. The guiding means **1***a* and **1***b* comprises parallel walls, an inner wall **1***a* and an outer wall **1***b*, protruding from the distal inner surface of the housing **1**. The locking members **2***a* of the carrier body **2** and the protruding members **3***a* of the needle hub **3** are placed between the parallel walls **1***a* and **1***b*. The locking members **2***a* have one or more inclined surfaces which are in contact with a part of the protruding members **3***a*. When the carrier body **2** is pulled or pushed towards the patient's skin, the locking members **2***a* will exert a force on and perpendicular to each inclined surface. This force has one component parallel to the walls **1***a* and **1***b* pointing in same direction as the movement, and another component perpendicular to the first component pointing toward the inner wall **1***a*. As long as the inner wall **1***a* is present, a force of same size but opposite direction as the second component will push back from the inner wall **1***a* keeping the protruding member **3***a* in a steady position between the walls **1***a* and **1***b*. When the inner wall la is not present the second component of the force exerted by the locking member will push the protruding members **3***a* towards the center of the device.

[**0041**] When the protruding members **3** have been released from interlocking with the locking members **2***a*, the needle hub is not influenced by a force in direction of the infusion part, and the force exerted by the second string **5** will overcome the friction between the insertion needle and the cannula extending from the infusion part **8** and move the needle hub **3** away from the infusion part **8**.

[**0042**] In FIG. **1** the carrier body **2** is placed and locked in a retraced position. The insertion needle **6** which is adjoined to the cannula is seen below the infusion part **8**. Both the spring units **4** and **5** are biased, and the locking members **2***a* is interlocked with the protruding members **3***a* of the needle hub **3** due to support of the inner walls **1***a*.

[**0043**] When the user wants to insert the infusion device, the device is first placed on the insertion site on the patient. Then the inserter is activated by the user by unlocking the carrier body **2** from the housing **1**.

[**0044**] It is not shown on this embodiment how unlocking of the carrier body **2** is done but one way is to provide the carrier body **2** with two members protruding into openings of the housing **1** opposite each other. Unlocking of the carrier body is then performed by the user pressing on the housing **1** at two opposite points placed on a line perpendicular to the line formed by the two protruding members of the carrier body **2**. Pressing on the two points on the perpendicular line will cause a deformation of the housing **1** and increase the distance between the two corresponding openings in the housing **1**, the protruding members of the carrier body will then be released from the housing **1**.

[**0045**] When the inserter is activated the first string **4** tries to return to an unbiased position and doing this brings the carrier body **2** and the infusion part **8** to a forward position shown in FIG. **2**.

[**0046**] In this forward position the insertion needle **6** and the adjoined cannula have penetrated the adhesive pad **7** placed at the proximal end of the housing **1**. The protruding members **3***a* of the needle hub **3** have in FIG. **2** been released from the support of the inner walls **1***a*, and as soon as the release from the inner walls **1***a* has taken place the protruding members **3***a* of the needle hub will be forced towards the center of the inserter to the position shown in FIG. **3**.

[**0047**] Immediately after the protruding members **3***a* of the needle hub are free of the inner walls **1***a*, the upward force from the spring unit **5** will bring the needle hub **3** to the position shown in FIG. **4**, where the needle hub **6** and the insertion needle **6** is fully covered by the housing **1**.

[**0048**] In FIG. **5** it is shown how the infusion part **8** has been secured to the adhesive pad **7**, the pad **7** is secured to the patient, and then the inserter is removed and can be disposed of in a safe way together as the contaminated insertion needle **6** is placed behind the protective walls of the inserter housing **1**.

1. An inserter for an infusion set comprising a housing (**1**), a carrier body (**2**) carrying an infusion part (**8**), a needle hub (**3**), a first moving unit (**4**) bringing the carrier body (**2**) to a forward position and a second moving unit (**5**) bringing the carrier body (**2**) to a retracted position, characterized in that the first moving unit (**4**) and the second moving unit (**5**) are placed at least partly parallel to each other.

2. The inserter of claim 1, wherein the first and the second moving unit (**4**, **5**) both are connected to a distal surface of the carrier body (**2**).

3. The inserter of claim 1, wherein the first moving unit (**4**) and the second moving unit (**5**) are placed inside the housing (**1**).

4. The inserter of claim 1, wherein

the housing (**1**) is provided with guiding means (**1***a*, **1***b*) on the internal surface for guiding the movement of the carrier body (**2**),

the needle hub (**3**) comprises an insertion needle (**6**) for piercing of the skin,

the carrier body (**2**) has at least one retracted and at least one forward position, and in the retracted position before insertion, the carrier body (**2**) and the needle hub (**3**) are locked to each other,

the carrier body (**2**) is provided with guiding means (**2***a*) corresponding to the guiding means (**1***a*, **1***b*) of the housing (**1**),

the first moving unit (**4**) is biasing the housing (**1**) and the carrier body (**2**) and the second moving unit (**5**) is biasing the carrier body (**2**) and the needle hub (**3**).

5. The inserter of claim 1, wherein the carrier body (**2**) stays in a forward position after insertion of the needle (**6**).

6. The inserter of claim 1, wherein the infusion part (**8**) is provided with an adhesive proximal surface.

7. The inserter of claim 1, wherein the infusion part (**8**) is provided with an adhesive distal surface.

8. The inserter of claim 4, wherein an adhesive pad (**7**) is releasably fastened to a proximal part of the housing (**1**).

9. The inserter of claim 8, wherein the adhesive pad (**7**) covers the proximal opening of the housing (**1**) through which the infusion part (**8**) is conveyed.

10. The inserter of claim 8, wherein the first moving unit (**4**) and the second moving unit (**5**) each comprises a compression spring.

11. The inserter of claim 4, wherein the carrier body (**2**) is provided with at least one inclined surface which surface is in contact with a rotating part (**3***a*) of the needle hub (**3**), which rotating part (**3***a*) can rotate in relation to a main part of the needle hub (**3**) to which the insertion needle is fastened, and the housing (**1**) is provided with a member (**1***a*) preventing the rotating part (**3***a*) of the needle hub (**3**) from rotating when the carrier body (**2**) is in a retracted position.

* * * * *