US 20090099521A1

(19) United States

(12) Patent Application Publication

Gravesen et al.

(10) Pub. No.: US 2009/0099521 A1

(43) Pub. Date: Apr. 16, 2009

(54) CANNULA INSERTION DEVICE AND RELATED METHODS

(76) Inventors: **Peter Gravesen**, Nordborg (DK); **Heiko Arndts**, Flensborg (DE)

Correspondence Address:
GOODWIN PROCTER LLP
PATENT ADMINISTRATOR
53 STATE STREET, EXCHANGE PLACE
BOSTON, MA 02109-2881 (US)

(21) Appl. No.: 12/250,760

(22) Filed: Oct. 14, 2008

(30) Foreign Application Priority Data

Oct. 16, 2007 (DE) 10 2007 049 446.9

Publication Classification

(51) Int. Cl.
A61M 5/20 (2006.01)

(52) U.S. Cl. 604/136

(57) ABSTRACT

A cannula insertion device includes a housing defining an opening for receiving therethrough a cannula and further defining a channel, and a cannula forming a lumen, the cannula adapted for sliding movement within the housing from a retracted position to an extended position. When the cannula is in the retracted position, the lumen is located remotely from the channel and the channel is in fluidic communication with the opening. When the cannula is in the extended position, the lumen is in fluidic communication with the channel.

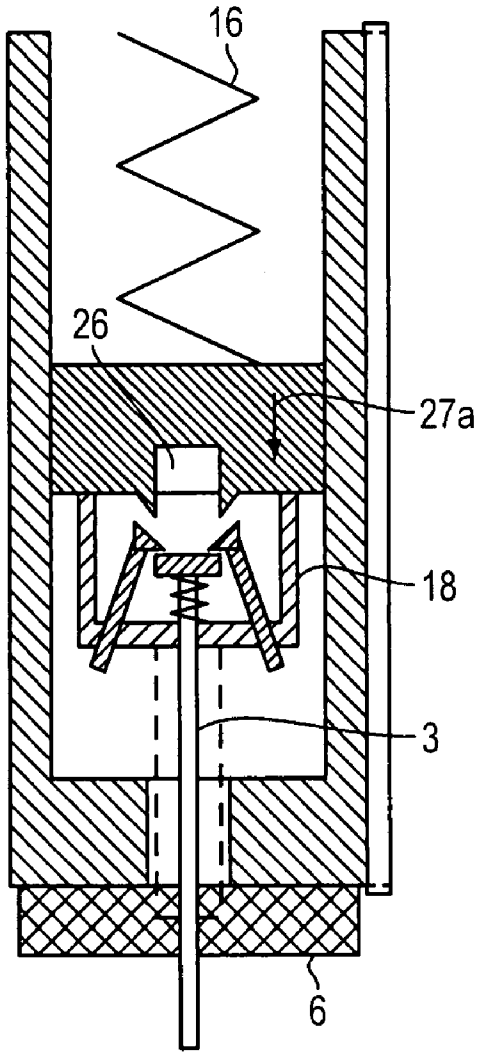

DEXCOM
EXHIBIT 1036

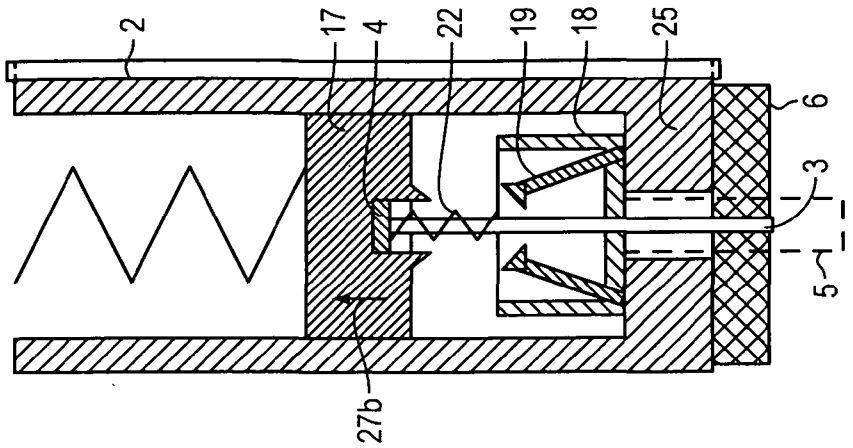

FIG. 3

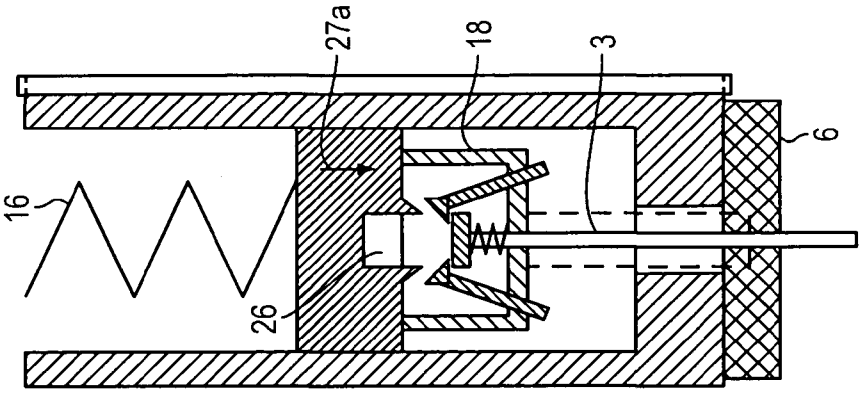

FIG. 2

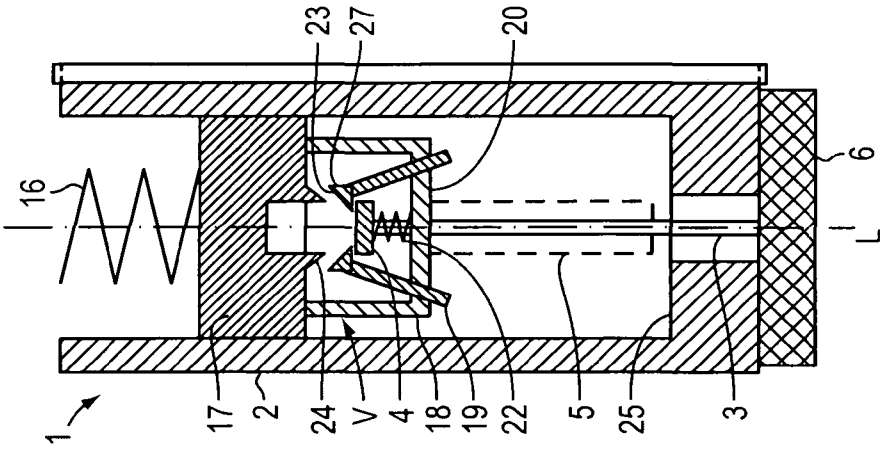

FIG. 1

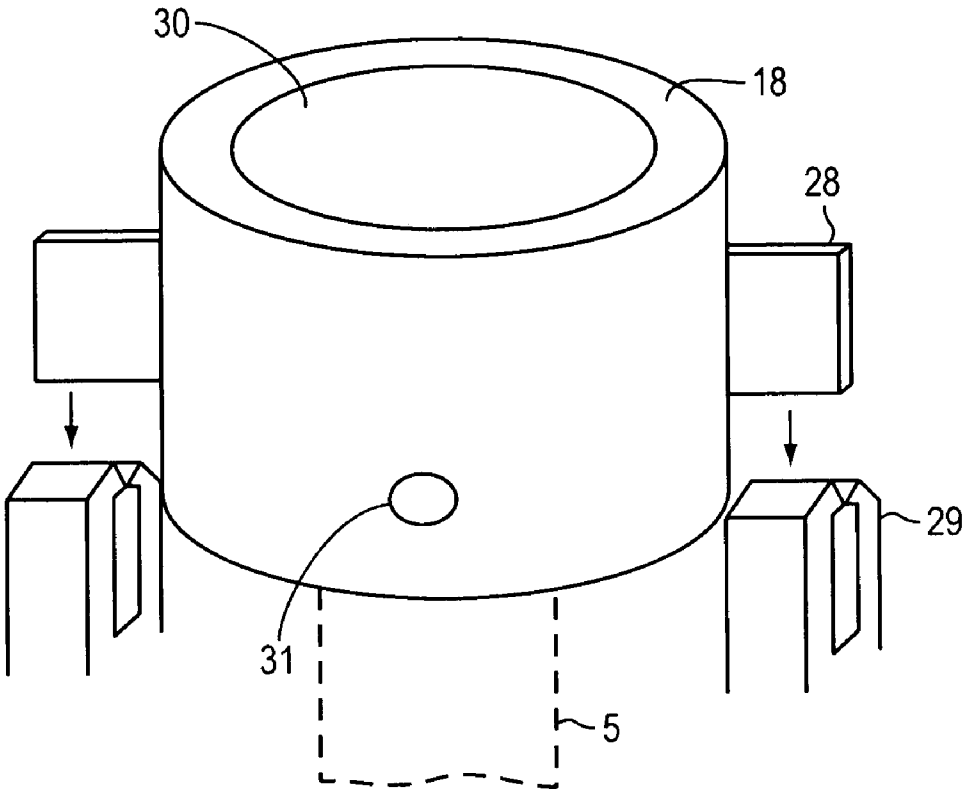

FIG. 4

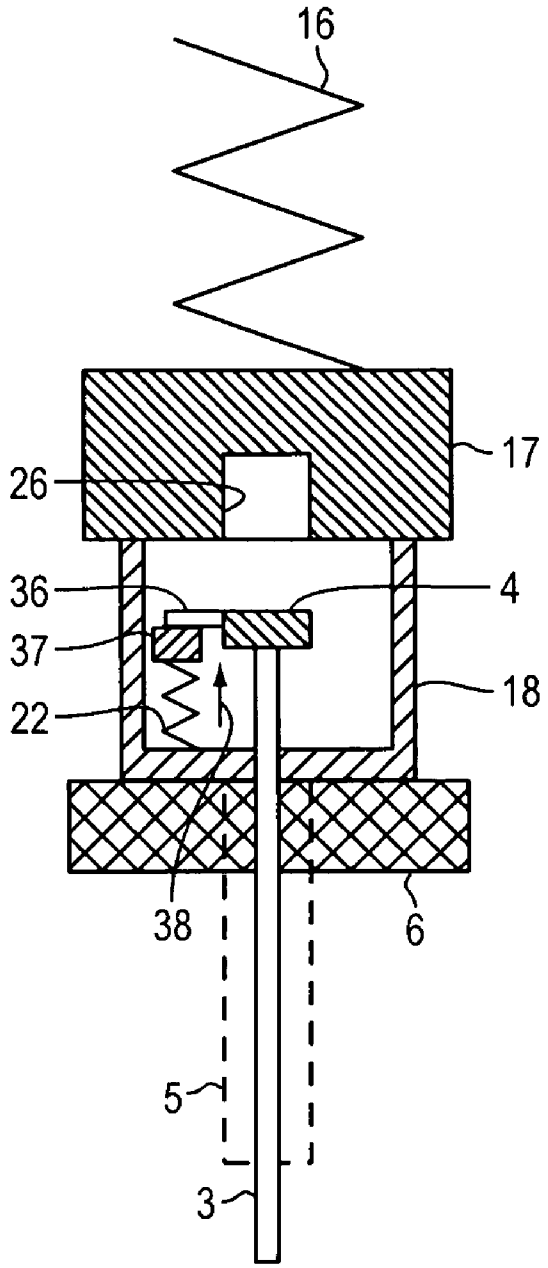

FIG. 5

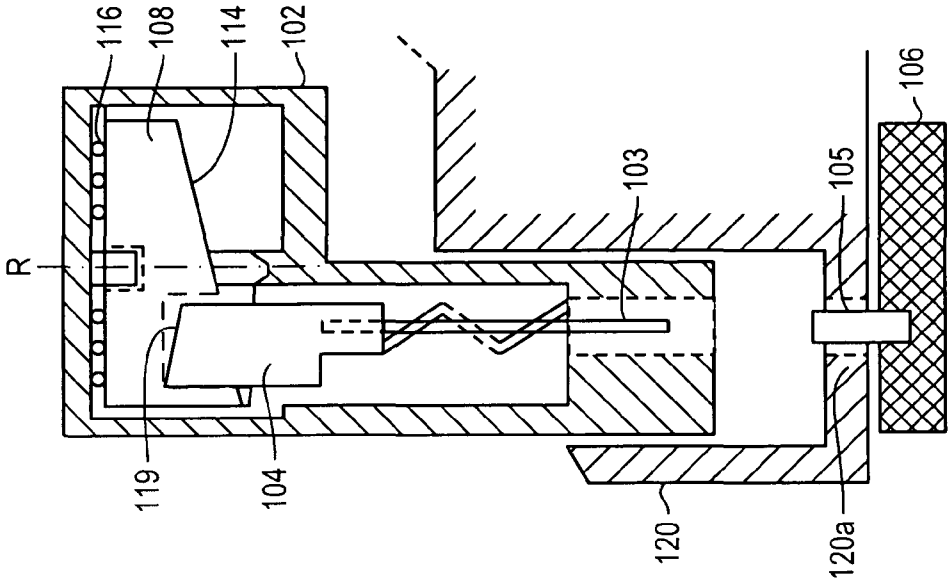
116
108
114
102
R
119
104
103
105
106
120
120a

FIG. 7

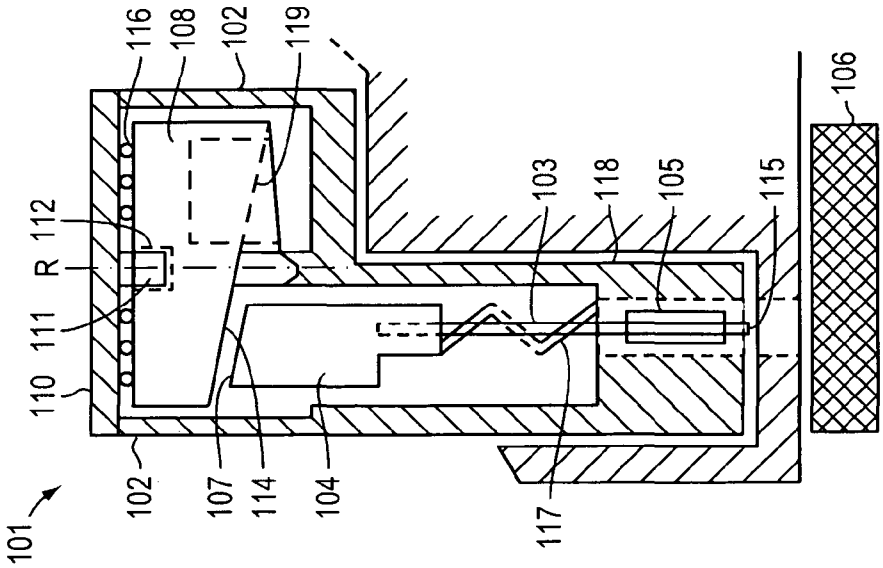
101
110
111
R
112
116
108
102
119
107
114
104
117
103
118
105
115
106

FIG. 6

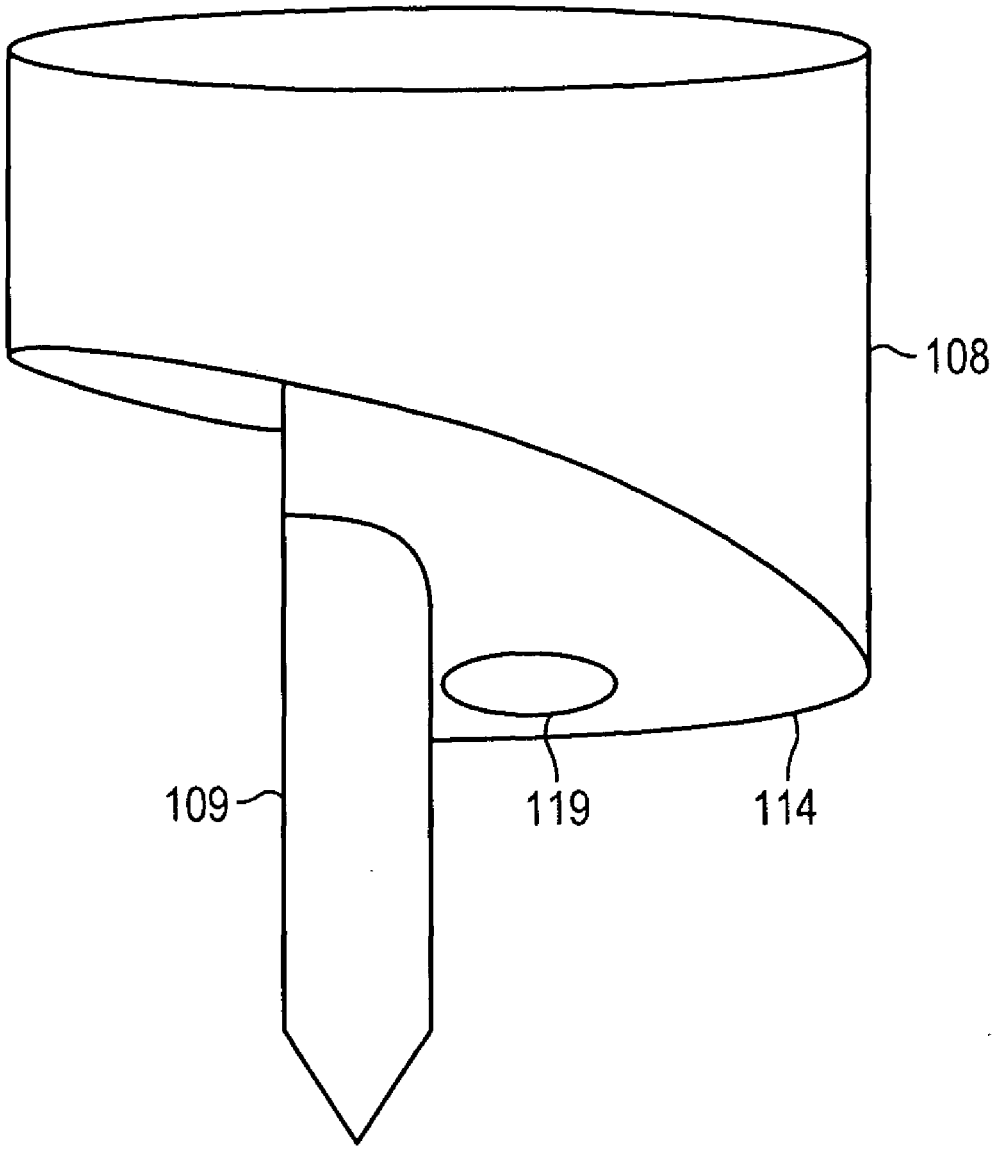

FIG. 8

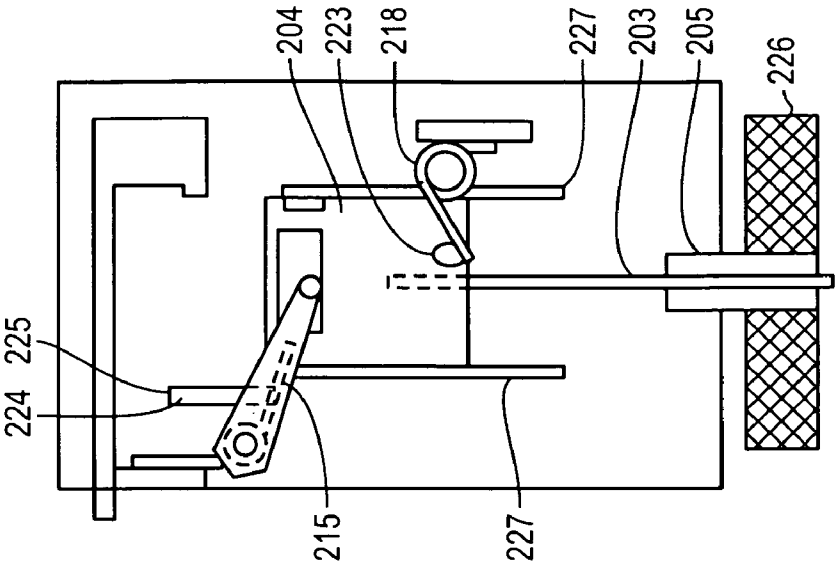
204
223
218
227
203
205
226
225
224
215
227

FIG. 10

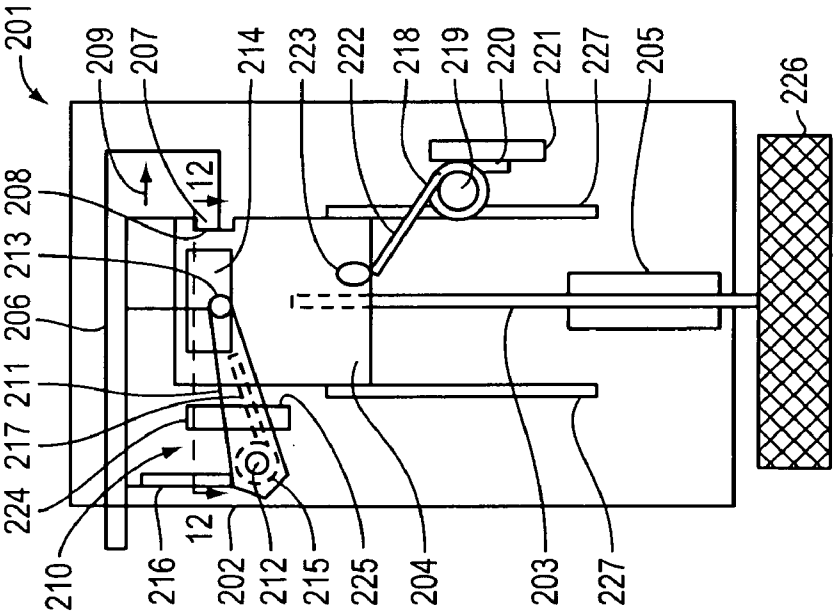
201
209
207
214
223
222
218
219
220
221
227
205
226
208
213
206
211
217
224
210
216
12
12
202
212
215
225
204
203
227

FIG. 9

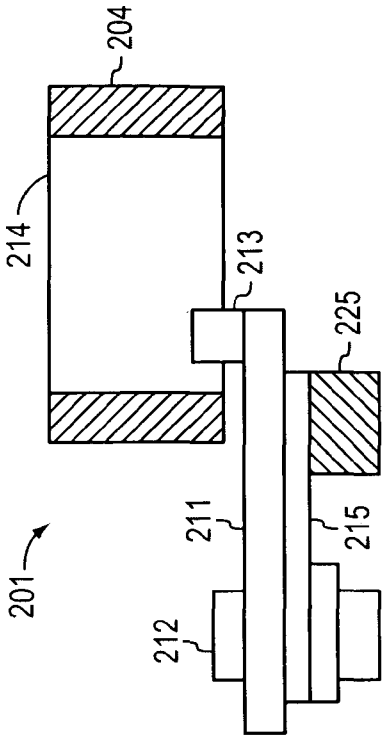

FIG. 12

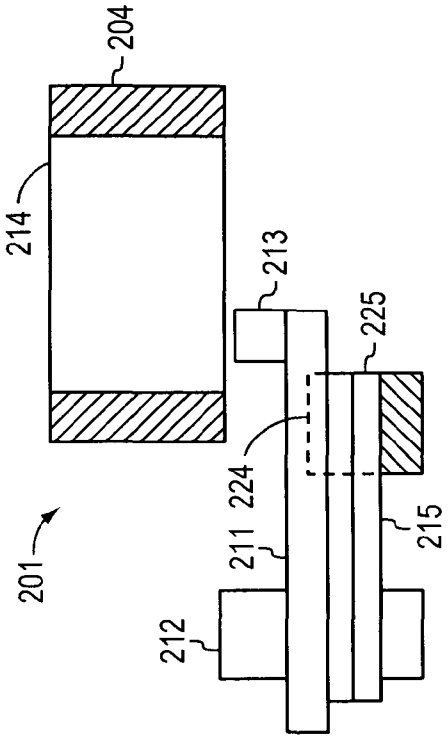

FIG. 13

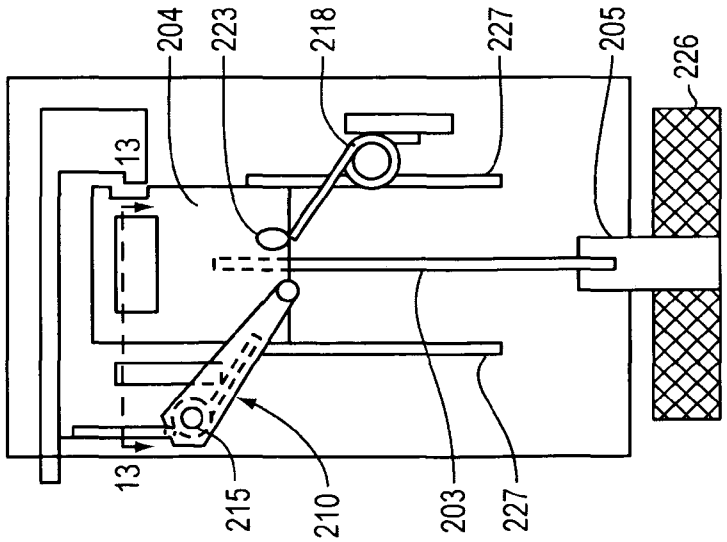

FIG. 11

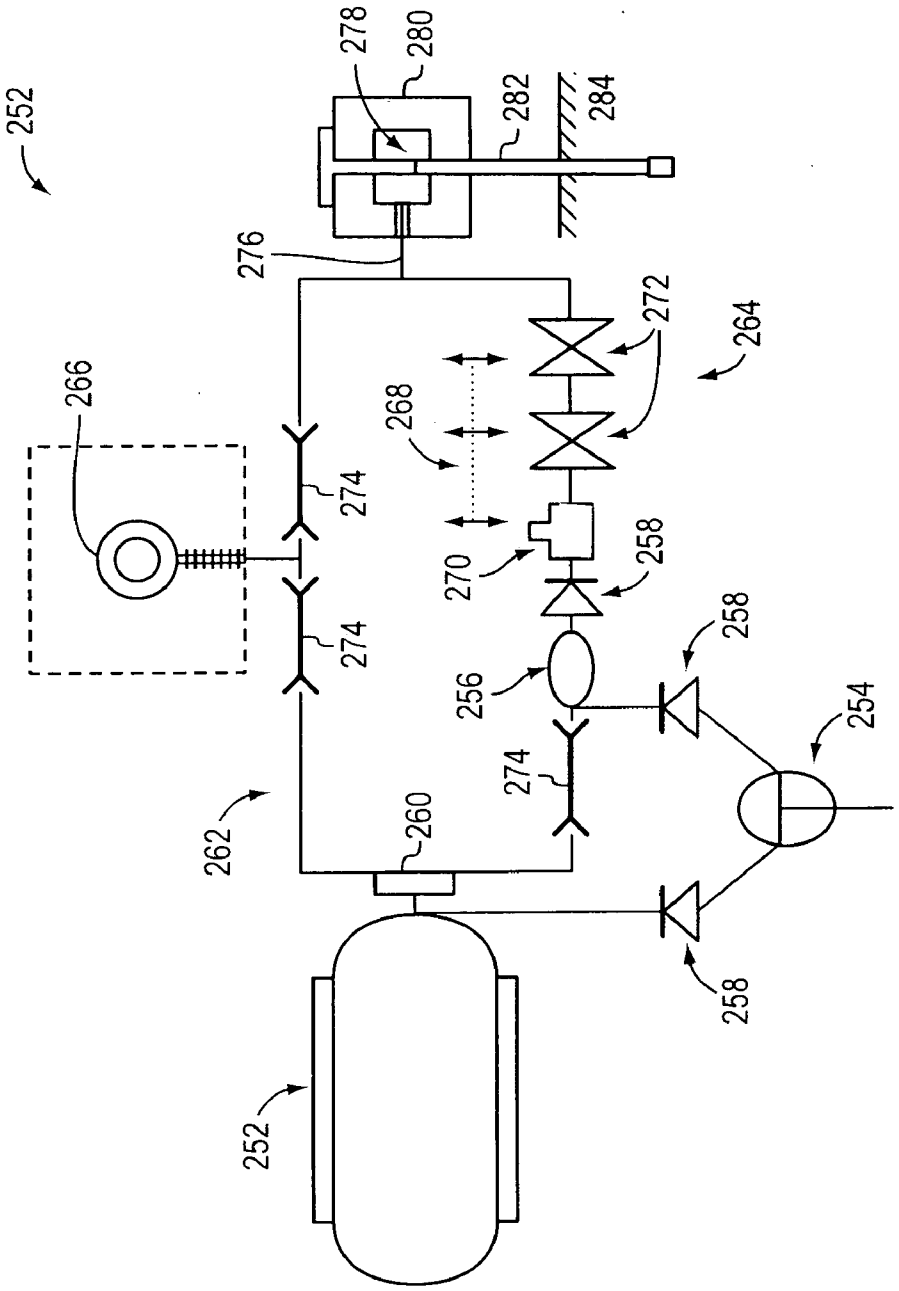
252
278
280
282
284
276
272
264
266
268
274
270
258
274
256
258
254
274
262
260
258
252

FIG. 14

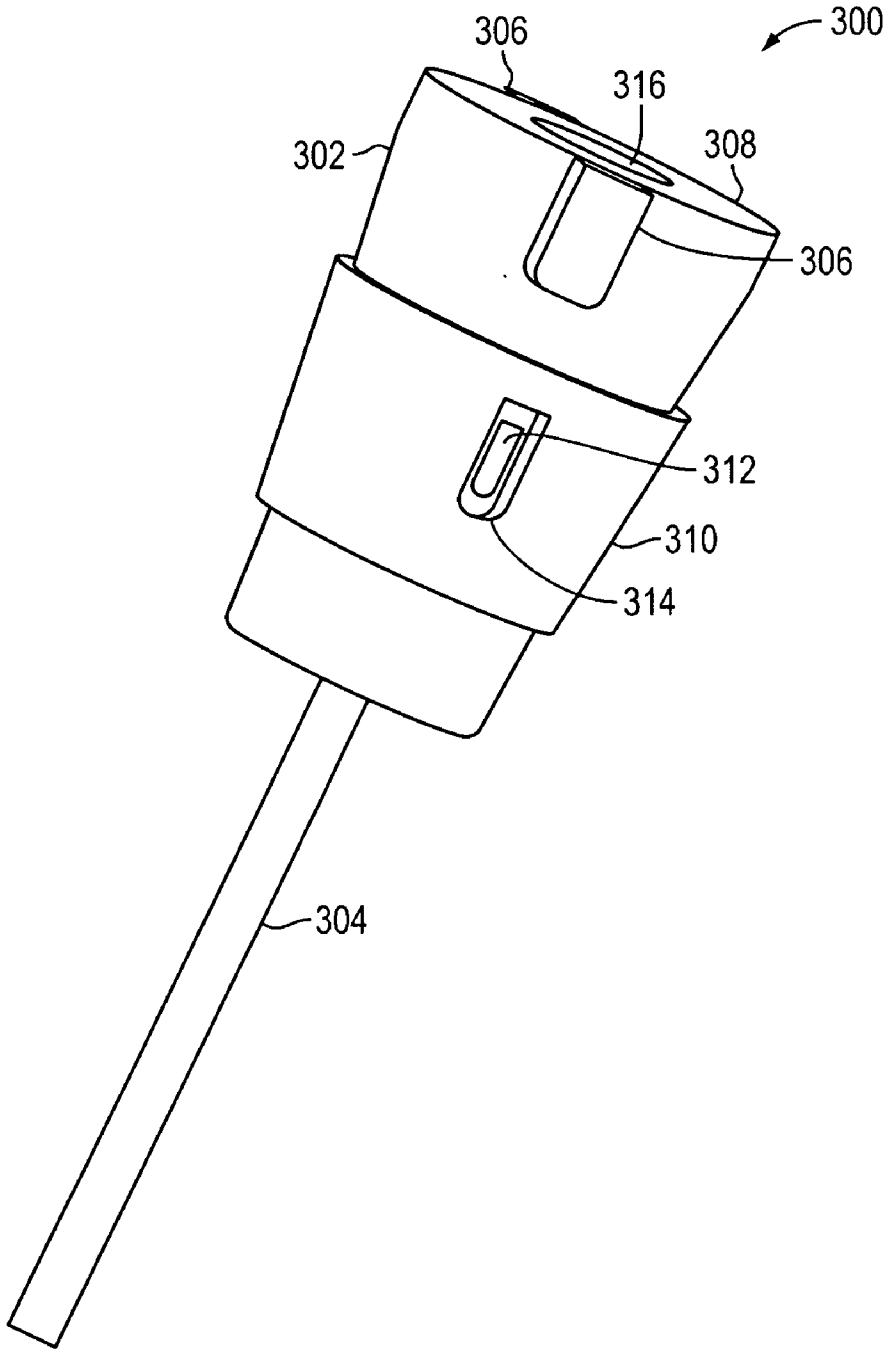

FIG. 15A

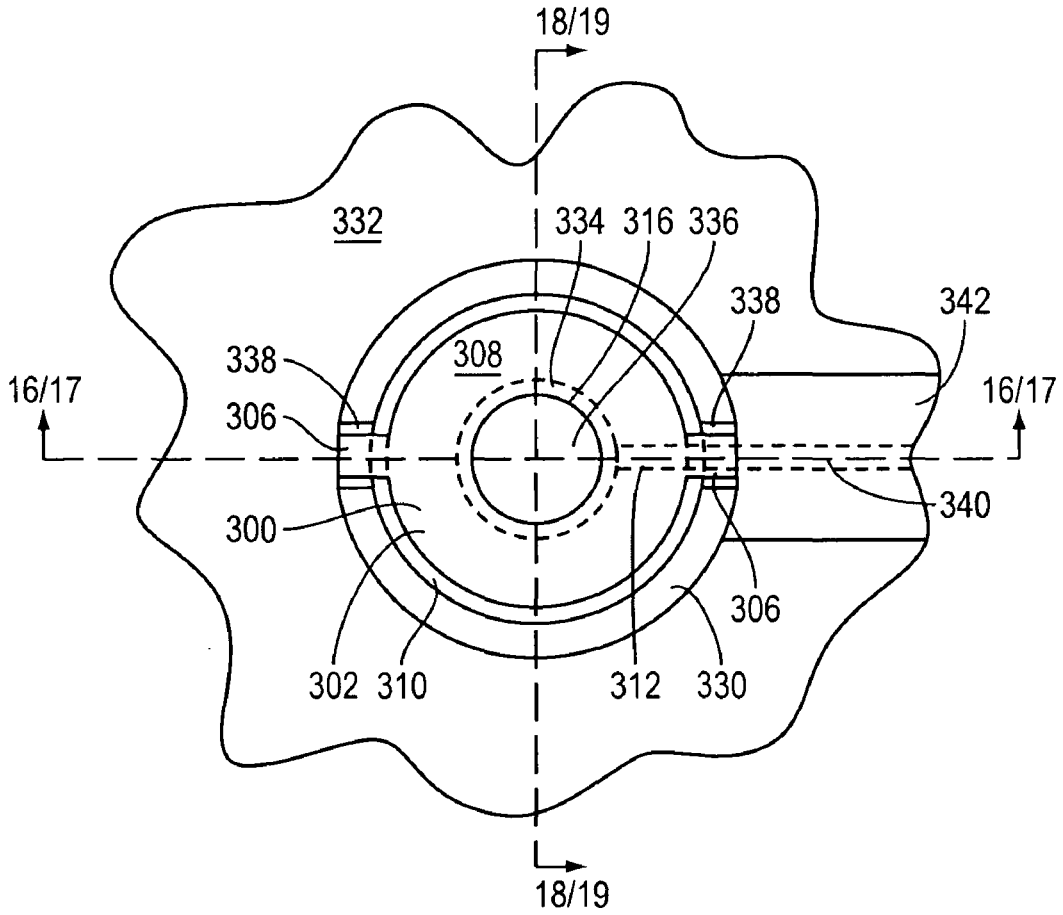
18/19
332
334
316
336
338
342
308
338
16/17
16/17
306
340
300
306
302
310
312
330
18/19

FIG. 15B

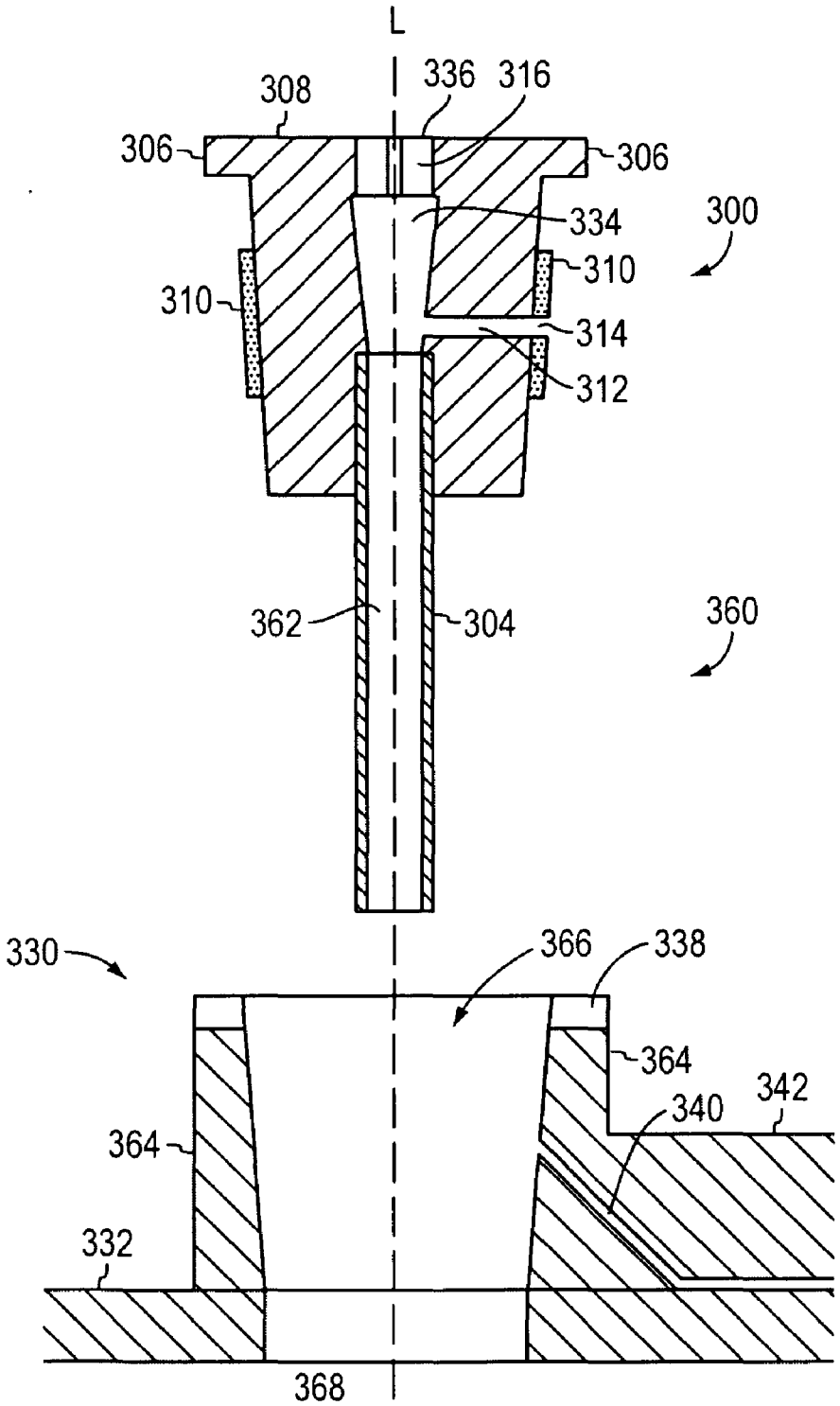
L
308
336
316
306
306
334
300
310
310
314
312
362
304
360
330
366
338
364
342
340
364
332
368

FIG. 16

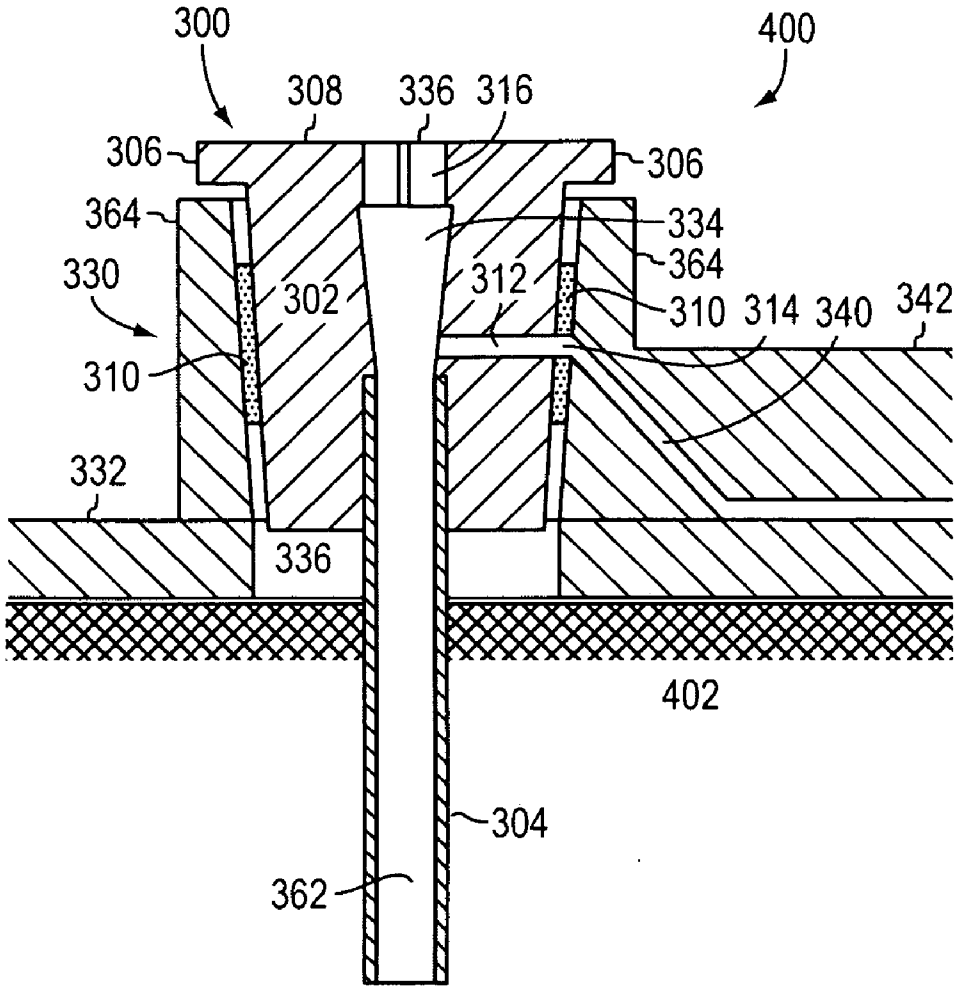
300
400
308
336
316
306
306
364
334
364
330
302
312
310
314
340
342
310
332
336
402
304
362

FIG. 17

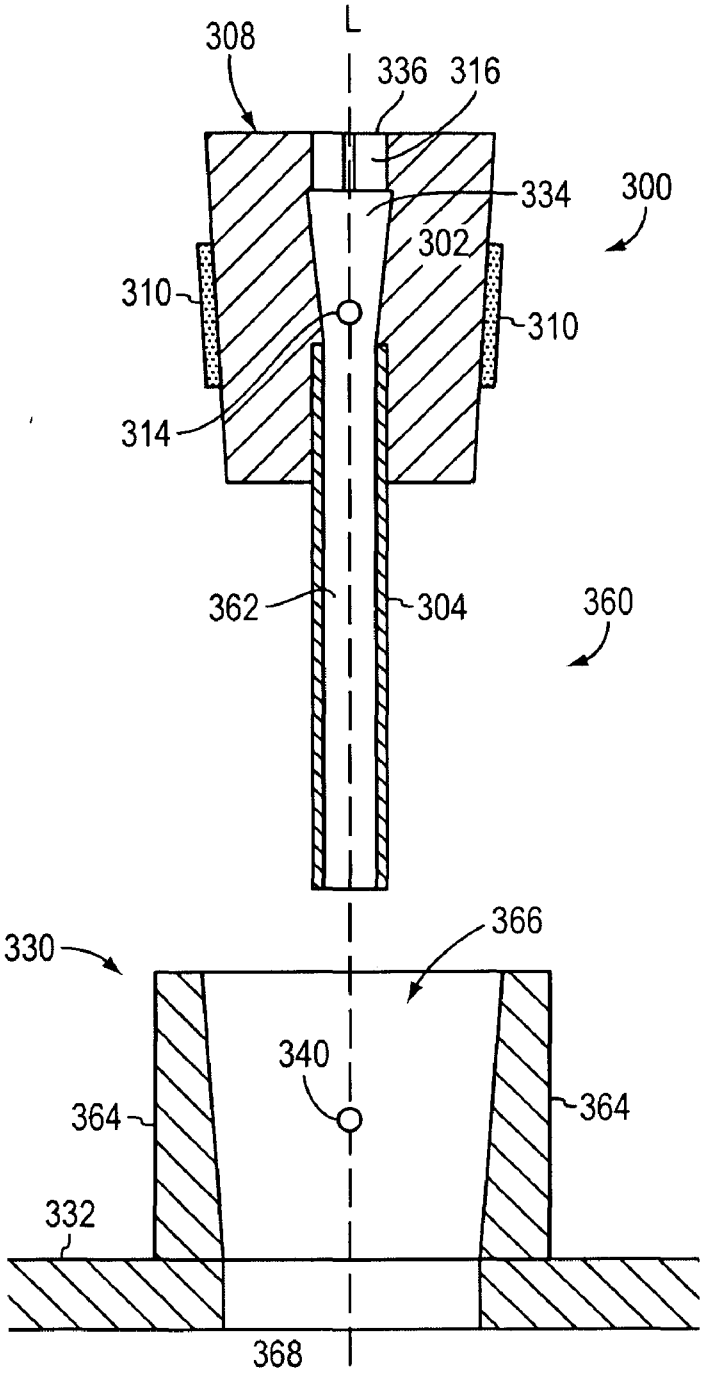
L
308
336
316
334
300
302
310
310
314
362
304
360
330
366
340
364
364
332
368

FIG. 18

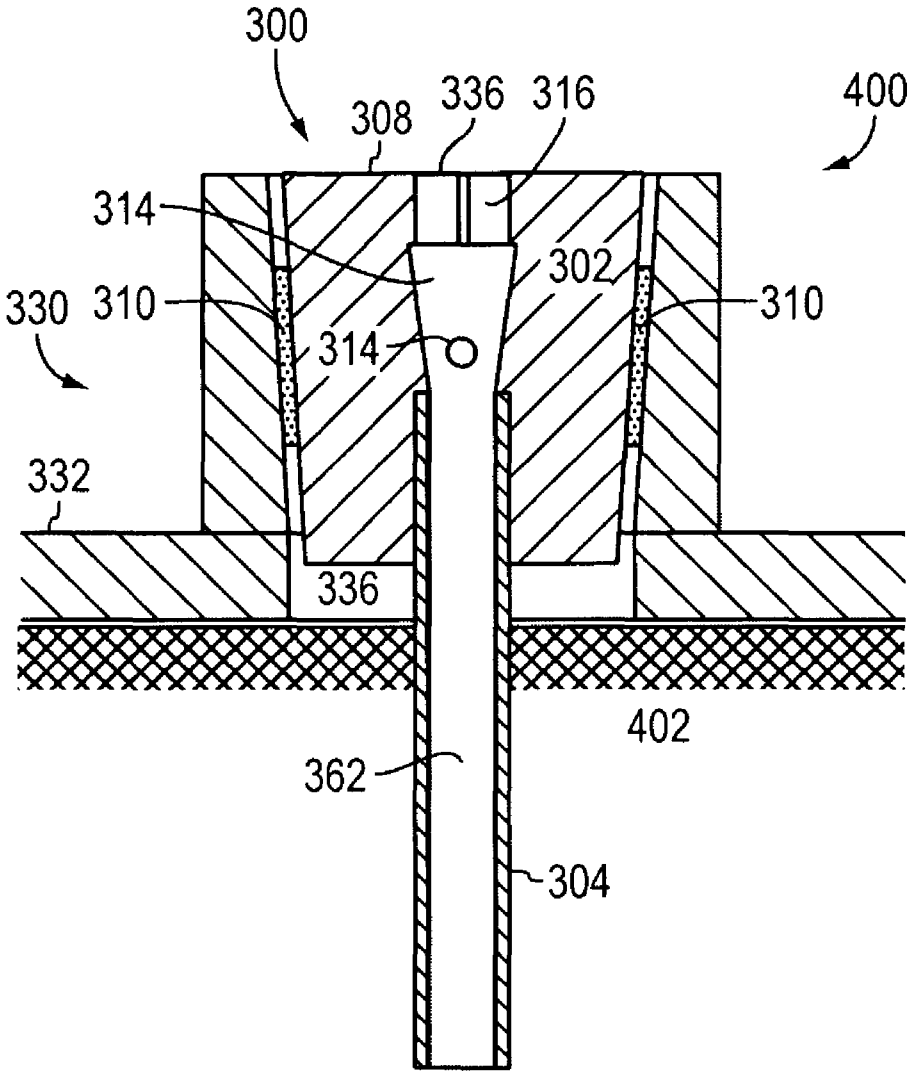

FIG. 19

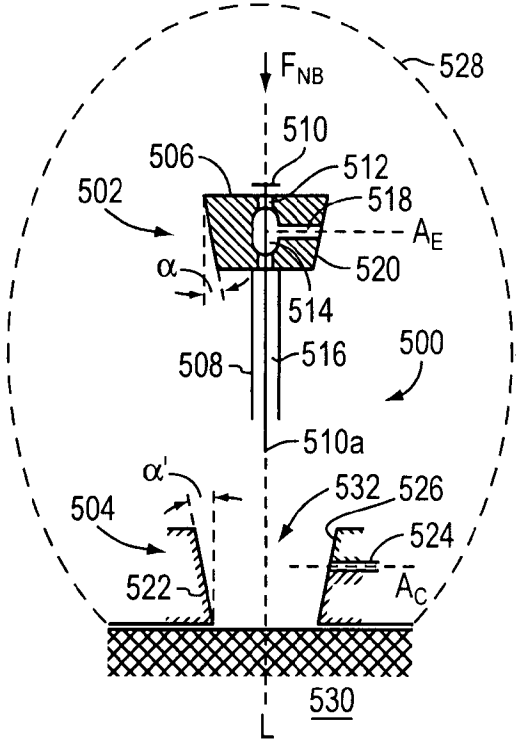

FIG. 20A

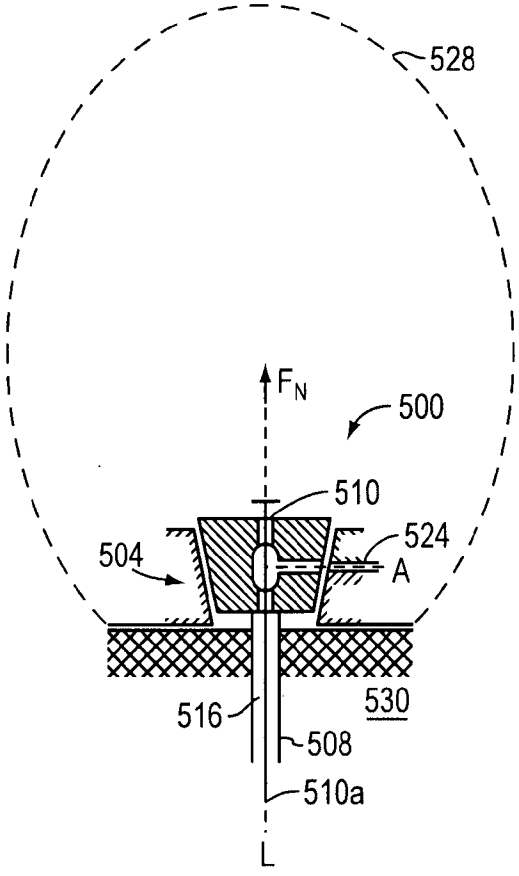

FIG. 20B

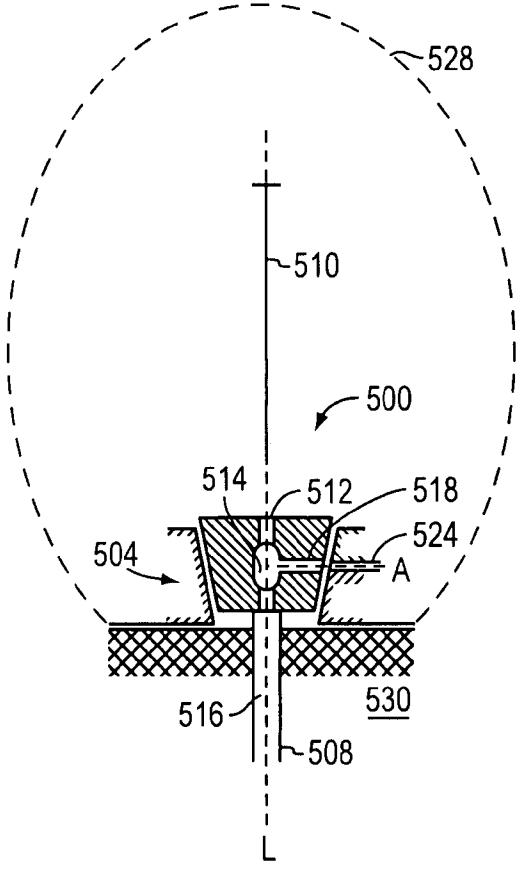

FIG. 20C

CANNULA INSERTION DEVICE AND RELATED METHODS

CROSS-REFERENCE TO RELATED APPLICATION

[0001] This application claims priority to and the benefit of German Patent Application Serial No. 10 2007 049 446.9, filed Oct. 16, 2007, the disclosure of which is hereby incorporated by reference herein in its entirety.

FIELD OF THE INVENTION

[0002] This invention relates generally to systems and methods for inserting a cannula into a patient and, more specifically, to a device that automatically inserts a cannula, as well as connects the cannula lumen to a channel within an infusion device.

BACKGROUND

[0003] In many cases, it is necessary to insert a catheter or cannula into the body, or a body part of, a patient. By means of the so-inserted cannula, it is then possible to infuse medicinally-required fluid or material. Another reason for the employment of a cannula may be to aid in insertion of a micro-dialysis probe into the body.

[0004] To insert a cannula into a patient, a rigid needle is placed within the lumen of the cannula, and the needle and cannula combination is forced into the skin of a patient. Once the cannula combination is fully inserted, the needle is retracted, leaving the cannula in place. When performed manually, the penetration of the catheter-carrying needle into the body, however, may be considered uncomfortable for a patient, or may cause some other anxiety. Also, the subsequent manual withdrawal of the needle is often regarded by some patients as painful.

[0005] Automatic cannula insertion devices have been developed to address these issues. Typically, a cannula is included in a stand-alone device called an insertion or injection set. In addition to the cannula and needle, the insertion set often includes a housing to which the cannula is attached during use. The housing may have an adhesive pad for adhering the housing to the skin of the patient during use, as well as an internal void or chamber that is penetrated by an inlet and a septum. The needle passes through the septum, void, and into the lumen of the cannula. After insertion, the needle is withdrawn from the septum, which seals the void. Thereafter, a tube is connected to the inlet, thereby placing the lumen (via the void) in fluidic communication with an infusion device, intravenous (IV) drip bag, or other medical equipment. The above-described insertion sets may be acceptable for some patients, but the attached tube and medical device can be obtrusive, which may be undesirable in some cases. It would be desirable then, to incorporate the functionality of an insertion set into an infusion device to minimize the attendant tubing and complications involved in connecting the insertion set to the infusion device.

SUMMARY OF THE INVENTION

[0006] The invention relates to an insertion device for a cannula, wherein the cannula is carried on a needle, as well as a cannula configuration that allows for automatic alignment of an inlet on the cannula with a channel in an infusion device, without having to separately connect a tube thereto. In combination with a drive apparatus, the needle can be displaced from a retracted position into an extended position, thus forming a fluidic connection.

[0007] During an insertion procedure described herein, a cannula is used in conjunction with a needle. The needle is used to penetrate the body. Subsequently, the needle is withdrawn from the body, allowing the cannula to remain in its inserted position. Consequently, one advantage of the invention is to increase the comfort of a patient during the insertion and withdrawal of a catheter or cannula. This benefit may be achieved with a device for the insertion of a cannula of the type described herein, wherein the needle, after reaching its extended state, can be withdrawn quickly and automatically by a retraction apparatus.

[0008] One embodiment of the invention allows the needle to not only quickly penetrate the body tissue (i.e., blood vessel, organ, or other body part) of a patient, but due to aid from the retraction apparatus, the needle is quickly withdrawn from the body tissue and simultaneously, the inserted cannula remains within the body tissue. In this way, since the needle is relatively quickly withdrawn from the body tissue, a much more comfortable sensation is experienced than that associated with a slower insertion and withdrawal. Further, any sensation is transient. The retraction apparatus is activated, in any case, when the needle is already within the patient's tissue, that is to say, when the needle is in its extended position. Thereby, it is possible for the operator to insert the needle and its associated cannula to a sufficient depth to reach a desired position within the body tissue.

[0009] In one embodiment, the driving element or needle plunger is subject to the force of a spring. The spring can be prestressed and restrained by an arresting apparatus from which it is released to carry out its driving function. The spring acts upon a drive mechanism, which includes at least one first part (e.g., a plunger), which is in driving contact with a free end of the spring and the drive mechanism includes one separate second part (e.g., a support structure), indirectly activated by the spring. Thus, the second part is made slidingly displaceable in a first direction by means of the motion of the first part and, conversely, separates itself therefrom upon a movement of the first part in an opposite direction. Such an arrangement reduces the weight, which contributes to momentum during the retraction of the needle. Simultaneously, the needle, upon its movement from the retracted position into the extended position, stabilizes the cannula sufficiently when so projected, so that that the insertion procedure can be reliably carried out.

[0010] In certain embodiments, the needle, which is seated in the second part, is releasably held. Accordingly, the needle can disengage itself from the second part at the outset of a retracting motion and can be withdrawn without obstruction. In this way, the needle is not permanently affixed to the drive mechanism, an advantage which can be usefully employed to even move the needle more quickly, i.e., through more rapid increments of retractive motion.

[0011] At the time that the needle is disconnected from the second part, nothing more than the weight of the needle need be placed in motion, an advantage which allows undiminished acceleration. Since the movement of a needle within the body tissue can be uncomfortable, it is helpful if the displacement of the needle can be accelerated so that it can be removed from the tissue in a minimal amount of time.

[0012] In one embodiment, the activation of the needle is subjected to force by a separate retraction spring (compres-

sion type) dedicated thereto, which acts in a direction from the second part toward the first part. It is possible, then, that this retraction spring serving the needle can be employed to force the now-released needle away from the second part in a direction that withdraws it from the penetrated body tissue. The second part can include at least one holding element that retains the needle therein, and permits the needle to be subsequently retracted from an extended position. The concept of "retraction" or "withdrawal," as used herein, is used to describe removal of the needle from the lumen of the cannula after full insertion or extension of the cannula. The method of construction of the holding element, that is, as to whether its retaining characteristic is due to mechanical, magnetic, or other induced forces, is of secondary importance for the purpose of this description. During the interim within which the needle has not yet reached its extended position, the holding element acts to affix the needle within the second part. As soon as the second part has reached its final and extended position, the retention of the needle is no longer necessary. Accordingly, at this time, the holding element releases the needle, so that it departs from the second part and extricates itself therefrom.

[0013] In one embodiment, the holding element is located in the exposed surface of an end of the second part, from which the needle projects. From this end surface of the second part, when in extended position, the tip of the needle comes into contact with another surface. This so designated "other surface" can well be a surface of the patient's tissue, wherein the cannula is in the process of being inserted. Otherwise, the contacted surface can even be a lining of a device housing. In any case, by means of an impact of the second part against a target surface, the holding element is released, i.e., the retention of the needle therein is ended.

[0014] In one embodiment, the first part possesses an activation element, which, at the completion of needle extension, acts upon the needle holding element. In this case, the first part is employed to relieve the holding element of the second part from its retaining function. By means of the mechanical structure of the holding element the needle is released when the position of the holding element changes. If the principle of construction of the holding element is electromagnetic in character, then the activation means may open a switch, which will interrupt a supply of current to the magnetic system. In such a case, the magnet becomes deprived of its power. Additionally, it is contemplated to displace a working magnet thereby terminating its holding ability. Additional methods for this removal of holding power are contemplated.

[0015] In an embodiment of the invention, the activation means of the first part and also the holding element possess complementary, coacting, inclined surfaces. Motion of the activation means toward the holding element, which is carried out in a direction parallel to the needle, can be diverted to a motion not parallel, but rather angular therefrom. In this alteration, the angular direction could even be at a right angle.

[0016] The needle is supported by the said retraction spring to lie against the first part. This constructive support can be used with or without a holding element. The retraction spring assures that the needle can be secured by means of one or more projections on the second part. This securement would hold the needle in place during the movement of the drive mechanism. When the needle and catheter begin to penetrate into the body tissue, the needle itself is subjected to a reaction force, which, without an element for holding, finally causes the needle to act contrary to the force of the retraction spring. Nevertheless, by means of an appropriate dimensioning of the retraction spring, arrangement can be made such that the needle-catheter combination penetrates sufficiently far into the subject body tissue.

[0017] The first part may possess a second holding means to which the needle becomes secured during a withdrawal from the extended position. This holding means retains the needle firmly within the first part, so that the needle retracts by means of the reversing motion of the first part of the drive mechanism.

[0018] In this arrangement, a second holding means consists of a cavity in the first part. The needle, or if necessary, a thickened section of the needle, is then simply retainingly inserted into the first part and subsequently held there by a force of friction. The necessary frictional forces can be increased by an appropriate surfacing of the interior of the cavity and/or increasing the size of the active exterior of the needle.

[0019] The first part and the second part are located in a housing. This housing possesses in the area remote from the drive spring, an end face that blocks the travel of the second part. If the second part makes contact with the end face of the housing, or places itself very close thereto, it will be held in position by the above described holding means. This prevents the second part from following the first part as it withdraws.

[0020] A storage means for medicaments or a communicating fluidic connection for the cannula is located in the second part. In one embodiment, the second part is secured to the cannula, so that after the withdrawal of the needle, the cannula remains in its extended position in the tissue of the patient. The medicament can then be infused through the cannula into the body. An input or outtake branching can also be joined to the cannula line. By means of the input or outtake device, a medicament can be applied or blood or the like can be withdrawn from the body.

[0021] The drive mechanism functions with the aid of an inclined surface on which is formed a path for movement of the needle, since the inclined surface moves in a direction transverse (or angular) to that of the needle. This path, which accommodates the perpendicular travel of the needle, ends in a steplike termination. With such a termination as described, the functional movement of the needle is thus decoupled from its penetrative direction. The needle is forced by the inclined surface and accordingly slides along this inclined surface, being augmented by the intervention of the drive mechanism. Because of the inclined surface, the needle is subjected to an angular resultant force, which causes the needle to move. Upon an activation of the drive mechanism, an additional force may be applied to alter the direction of motion of the needle.

[0022] The above "step" is formed by a recess in the inclined surface. The needle, or an integral element thereof, drops into the recess once it has reached its final, extended position. This recess also blocks any additional movement of the inclined surface. The inclined surface possesses a helical configuration and moves in a rotatable body. This rotatable body comprises, for example, a cylindrical shape, and can form a part of the drive mechanism. When this body is rotated, then an effective area of the inclined surface forms a slidingly spiral path for the needle alone or for both the needle and the drive mechanism together. As the needle moves from its withdrawn position into its extended position it may move with the drive mechanism. In this way, a relatively long length of the sliding path on the helical inclined surface is achieved with

minimum space and an excessive dimensioning of the insertion mechanism is thereby avoided.

[0023] In one aspect, the invention relates to a cannula insertion device including a housing defining an opening for receiving therethrough a cannula and further defining a channel, and a cannula forming a lumen, the cannula adapted for sliding movement within the housing from a retracted position to an extended position, wherein when the cannula is in the retracted position, the lumen is located remotely from the channel and the channel is in fluidic communication with the opening, and when the cannula is in the extended position, the lumen is in fluidic communication with the channel. In an embodiment of the above aspect, the cannula insertion device further includes a base connected to the cannula, the base defining an internal chamber in fluidic communication with the lumen. In another embodiment, the base further defines a chamber extension in fluidic communication with the internal chamber. In yet another embodiment, when the cannula is in the extended position, the chamber extension is aligned with the channel. In still another embodiment, a wall of the base defines the chamber extension.

[0024] In another embodiment of the above aspect, the base includes a resilient sheath, the sheath defining a port substantially aligned with the chamber extension. In another embodiment, when the cannula is in the extended position, the port is aligned with the channel. In yet another embodiment, when the cannula is in the extended position, the sheath seals the opening. In still another embodiment, the cannula insertion device further includes a plunger for driving the cannula from the retracted position to the extended position. In another embodiment, the cannula insertion device further includes a needle disposed in the lumen when the cannula is in the retracted position. In another embodiment, the needle is adapted to be automatically withdrawn from the lumen when the cannula is in the extended position. In another embodiment, the needle is adapted to be automatically disconnected from the plunger when the cannula is in the extended position.

[0025] In another aspect, the invention relates to a method of inserting a cannula, the method including the steps of providing a housing defining an opening for receiving therethrough a cannula and further defining a channel, providing a cannula forming a lumen, the cannula adapted for sliding movement within the housing from a retracted position to an extended position, and extending the cannula from the retracted position, in which the lumen is located remotely from the channel and the channel is in fluidic communication with the opening, to the extended position, in which the lumen is in fluidic communication with the channel. In an embodiment of the above aspect, the method further includes the step of piercing a skin of a patient with a needle and the cannula as the cannula moves from the retracted position to the extended position. In another embodiment, the method further includes the step of withdrawing the needle from the lumen automatically when the cannula is in the extended position. In yet another embodiment, a plunger extends the cannula from the retracted position to the extended position, the plunger in contact with the needle. In still another embodiment, the method includes the step of disconnecting the needle from the plunger when the cannula is in the extended position. In another embodiment, the method includes the step of sealing the opening with the cannula when the cannula is in the extended position.

BRIEF DESCRIPTION OF THE FIGURES

[0026] Other features and advantages of the present invention, as well as the invention itself, can be more fully understood from the following description of the various embodiments, when read together with the accompanying drawings, in which:

[0027] FIG. **1** is a schematic sectional side view of an insertion device in a retracted position in accordance with one embodiment of the invention;

[0028] FIG. **2** is a schematic sectional side view of the insertion device of FIG. **1** in an intermediate position;

[0029] FIG. **3** is a schematic sectional side view of the insertion device of FIG. **1** in a second intermediate position;

[0030] FIG. **4** is a schematic perspective view of a portion of an insertion device in accordance with another embodiment of the invention;

[0031] FIG. **5** is a schematic sectional side view of an insertion device in accordance with another embodiment of the invention;

[0032] FIG. **6** is a schematic side view of an insertion device in a retracted position in accordance with another embodiment of the invention;

[0033] FIG. **7** is a schematic side view of the insertion device of FIG. **6** in a withdrawn position;

[0034] FIG. **8** is a schematic perspective view of an insertion ramp in accordance with one embodiment of the invention;

[0035] FIG. **9** is a schematic side view of an insertion device in a retracted position in accordance with another embodiment of the invention;

[0036] FIG. **10** is a schematic side view of the insertion device of FIG. **9** in an extended position;

[0037] FIG. **11** is a schematic side view of the insertion device of FIG. **9** in a withdrawn position;

[0038] FIG. **12** is a schematic top sectional view of the insertion device of FIG. **9**;

[0039] FIG. **13** is a schematic top sectional view of the insertion device of FIG. **11**;

[0040] FIG. **14** is a schematic diagram of an exemplary infusion device microcircuit;

[0041] FIG. **15**A is a schematic perspective view of an automatically-aligning cannula in accordance with one embodiment of the present invention;

[0042] FIG. **15**B is a schematic top view of the cannula of FIG. **15**A;

[0043] FIG. **16** is a schematic side sectional view of the cannula of FIG. **15**A in a retracted position from an associated housing;

[0044] FIG. **17** is a schematic side sectional view of the cannula of FIG. **15**A in an extended position;

[0045] FIG. **18** is a schematic side sectional view of the cannula of FIG. **15**A in the retracted position;

[0046] FIG. **19** is another schematic side sectional view of the cannula of FIG. **15**A in the extended position; and

[0047] FIGS. **20**A-**20**C are schematic side sectional views depicting a method of inserting an automatically-aligning cannula in accordance with one embodiment of the invention.

DETAILED DESCRIPTION

[0048] FIG. **1** depicts an embodiment of an insertion device for a catheter **1** having a housing **2**, within which a needle **3** is affixed by a needle holder **4**. On the end remote from the needle holder **4**, the needle **3** carries a catheter or cannula **5**. In this document, the terms "catheter" and "cannula" are used interchangeably and without limitation to described any tube-like implement to deliver fluids to any body part of a patient. In the attached figures, for the sake of clarity, the representa-

tion of the catheter **5** is enlarged. In general, the diameter of the catheter **5** is only slightly larger than the outside diameter of the needle **3**.

[0049] The needle **3**, in a manner not shown, is so enveloped by a guide in the housing **2**, that it can only move in a direction parallel to its longitudinal axis L. The design allows the needle **3** to be displaced into an extended position. In this extended position of the needle **3**, depicted in FIG. **2**, the catheter **5** is positioned at least partially outside the housing **2** and thus penetrating into body tissue **6**. Designated here as "body tissue" is to be understood, for example, the skin, vein, or organ of a patient.

[0050] In order to move the needle **3** in conjunction with the catheter **5**, a drive mechanism V is provided. Alternative drive mechanisms are also described in FIGS. **6-13**. The drive mechanism V depicted in FIGS. **1-3** possesses a drive spring **16** which powers the drive mechanism V. Described in greater detail, the drive spring **16** acts upon a first part or plunger **17**, which is positioned against a second part or support structure **18**. This support structure **18** can be loosely affixed to the first part or plunger **17** or, alternately, secured thereto by an additional spring (not shown), which would abut the housing **2**. In another embodiment, a holding means can be installed to combine the first and second parts, respectively **17** and **18**. This holding means may be any type of chemical, mechanical, electromagnetic, or other fastener. In any case, the two parts **17** and **18** are made to move under the force of the drive spring **16** in the direction of the tissue **6** of a patient, as depicted by arrow **27***a*.

[0051] In the support structure **18**, the needle **3** is retained, in particular by means of two needle holding elements **19**. These holding elements **19** project outward from the patient proximal end face **20** of the support structure **18**. The two holding elements **19** each include endwise, remote from the end face **20**, a hook **21**, which is shown in FIGS. **1** and **2** as located on the top of the needle holder **4**. The needle holder **4** supports itself against the support structure **18** by means of a retraction spring **22**. However, this needle holder **4** can only be displaced in the direction of the plunger **17** to such extent that it is permitted by the needle holding elements **19**.

[0052] Each of the hooks **21** on the needle holders **19** possesses on the end proximate to the plunger **17** an inclined outer surface **23**. The plunger **17** is equipped on the side proximate to the support structure **18** with projections having inclined surfaces **24**, which are complementary to the above-mentioned surfaces **23**. When the parts **17** and **18** are sufficiently displaced by the force of the drive spring **16**, the needle holding elements **19**, projecting out of the end face **20** of the support structure **18**, make contact with a base wall **25** of the housing **2**. The holding elements **19** are detachably connected to the support structure **18**. Accordingly, as the holding elements **19** make contact with the base wall **25**, spring **16** continues to drive support structure **18** toward the base wall **25**, causing the holding elements **19** to detach from the support structure **18**. The continued movement of the support structure **18** in the direction of the base wall **25** forces the needle holding elements **19** in the direction of the plunger **17**, until the complementary inclined surfaces **23**, **24** contact one another. At this point, the holding elements **19** are displaced outward and thus free the needle holder **4** from the support structure **18**. With this arrangement, the needle **3**, activated by the force of a retraction spring **22**, is moved in the direction of the plunger **17**. At this point of operation, the compressed retraction spring **22** initially displaces the needle **3** with a relatively greater acceleration. Accordingly, the needle **3** is forced backward out of the body tissue **6**.

[0053] The first part includes a recess **26**, into which the needle holder **4** can retreat under the force of the retraction spring **22**. This recess **26** is, in this case, simply shown as a cavity sized to match the needle holder **4**. Other types of recesses are also contemplated. In function, the recess **26** accepts the needle holder **4** with the thereto affixed needle **3** and, at the same time, firmly secures the needle **3**, so that, after the initial movement, the needle **3** can be retracted along with plunger **17** out of its extended position. The needle holder **4** may be secured within the recess **26** by mechanical, chemical, magnetic, friction, or other means. At the same time, the needle **3** is relieved of the catheter **5**, which remains in its embedded position in the patient's tissue **6**. This displacement of parts is shown by the arrow **27***b*.

[0054] The support structure **18**, in this state of the operation, remains in the position shown in FIG. **3**. The support structure **18** may be equipped with lateral lugs **28**, which may fit into clamps **29**, when the support structure **18** is fully extend and the catheter inserted into the patient tissue **6**. These lugs **28** and clamps **29** are depicted in FIG. **4**. The clamps **29** firmly secure to the lugs **28**, so that the support structure **18** lies fixedly on the base wall **25** of the housing **2**. In an alternative to the depicted lugs and clamps, matching male and female ports may be located on the support structure **18** and base wall **25** to hold the support structure **18** in place against the base wall **25**. Additionally, lugs be used in embodiments of the catheter insertion device that do not utilize a support structure. For example, the automatically aligning cannula depicted in FIG. **14** utilizes lugs for alignment, secured directly to the catheter base. This embodiment is described in more detail below.

[0055] Additionally, means can be provided that exert a clamping force between the support structure **18** and the needle **3** or between the catheter **5** and the needle **3**. In such a case, during a displacement of the support structure **18**, forces would be transferred to the needle **3**, which would be sufficient to firmly align the needle **3** in place during its penetration into the body tissue **6**. When the catheter **5** and the needle **3** attain their desired penetration, i.e., reach the extended position, then the clamping of the holding means is relaxed and the retaining friction attributable thereto against the needle **3** is removed, so that the needle **3** is free to be withdrawn in the manner described above.

[0056] The support structure **18** may possess a stand-alone storage means for medicaments, whereby the medicaments can be delivered through the catheter **5**. Alternatively, the cannula insertion device described herein may be integrated with a medication delivery device having its own storage means of medicament. In such an embodiment, the support structure **18** can be provided with an opening **31**, by means of which an input of medicament supply or the like can be effected. Such an opening would also permit the input or removal of materials, for instance of blood or sera. Such an embodiment is described in more detail with regard to FIGS. **14-20**C.

[0057] FIG. **5** shows an alternative embodiment of the needle retraction system depicted in FIGS. **1-3**. In this embodiment, needle holder **4** is provided with a lateral projection **36**, which is acted upon by the retraction spring **22**. A release apparatus **37** prevents the retraction spring **22** from retracting the needle **3** prior the needle **3** reaching the extended position depicted in FIG. **5**. Once the needle **3** is in

the extended position, however, the release apparatus **37** frees the retraction spring **22** and the needle **3** is withdrawn from the body tissue **6** in the direction of arrow **38**. In the withdrawn position, the needle holder **4** would be secured within the recess **26**. As the plunger **17** retracts, the needle **3**, retained in the recess **26**, is thereby fully withdrawn from the tissue **6**.

[0058] The insertion device **101** for a cannula, shown in FIGS. **6-8**, includes a housing **102**, in which the needle **103** coacts with needle holder **104** and cannula **105**. Conveniently, a combination of the needle **103** and the needle holder **104**, for example, could be constructed as a lancet. In this embodiment, the needle holder **104** is shown as a one-piece object. This could otherwise be made as a combination with the two parts **17** and **18**, in the manner presented and explained in FIGS. **1-3**. The needle holder **104** includes a contacting surface **107** on the end remote from the needle **103**.

[0059] A cylindrical insertion ramp body **108** is located within the housing **102**. The ramp body **108** is provided with a pin **109**, about which it can rotate within the housing **102**. Additionally, a cover **110** for the housing **102** has a positioning pin **111** which is designed to penetrate into a recess **112** in the ramp body **108**, so that the ramp body **108** can align itself on both axial ends (pin **111** and pin **109** form an axis R around which the ramp body rotates) to prevent dislocation or skewing of the body **108**. The housing cover **110** is preferably adhesively affixed to the housing **102** or it may be welded thereto; other methods of connection are contemplated.

[0060] The ramp body **108** includes an inclined, helically disposed surface **114** which is provided with a path for movement of an object thereon. For the sake of clarity, a separation is depicted between the needle holder **104** and the ramp body **108**. In reality, the needle holder **104** lies directly on, and in complementary contact with, the helical surface **114** of the ramp body **108**.

[0061] As the ramp body **108** rotates about its axis R, the needle holder **104** slides along the surface **114**, forcing the needle **103** and cannula **105** downward (as depicted in FIGS. **6-7**) such that the penetrative needle tip **115** exits the housing **102**. As the tip **115** penetrates the tissue **106**, the catheter **105** is inserted into the tissue **106**.

[0062] The degree of force in the drive mechanism for the rotation of the ramp body **108** is furnished by a drive spring **116**, which is designed to produce a torsion force about the axis R. Consequently, this drive spring **116** is provided with an end (not shown) abutting the housing **102** and having the other end affixed to the ramp body **108**. A releasable arresting element (not shown) retains the ramp body **108** against the force of the prestressed drive spring **116**. After the release of the arresting holding element, the ramp body **108** rotates in reference to the needle holder **104** by the force of the drive spring **116**. This rotation displaces the needle holder **104** and therewith the needle **103** in the direction of body tissue **106**.

[0063] The needle holder **104** is supported by means of a retraction spring **117**, which abuts against the housing **102** at a section **118** thereof. This housing section **118** is proximate the cannula **105**, when the needle **103** is placed in the retracted position as shown in FIG. **6**. The retraction spring **117** also assures that the needle holder **104** is in contact with the inclined, helical surface **114** and that such contact is maintained. Upon rotation of the cylindrical body **108**, the retraction spring **117** is additionally stressed. This spring is designed in an open spiral manner, which may surround the needle **103** lying between the section **118** of the housing and the needle holder **104**. This retraction spring **117** can also act upon another location on the needle holder **104**, especially on the first part **17** as seen in the FIGS. **1-3**.

[0064] During the rotation of the ramp body **108**, the contacting surface **107** of the needle holder **104** lies on a predetermined, circularly running path on the inclined surface **114**. At the end of this circular running path, the ramp body **108** drops off as a recess **119**, which is so dimensioned that the needle holder **104** can fit therein, as depicted in FIG. **7**. Accordingly, it is only possible for the ramp body **108** to rotate until the needle holder **104** secures itself within the recess **119**.

[0065] The needle **103**, with the cannula **105**, is now inserted into the body tissue **106** by the force of the driving spring **116**. The lift of the needle holder **104**, which is created by the inclined surface **114**, is sufficient to serve for this purpose. As soon as the ramp body **108** has sufficiently rotated so as to align the recess **119** with the needle holder **114**, no further movement of the needle **103** into an extended position may occur. Instead, a retraction motion now occurs, powered by the force of the retraction spring **117**. Since the needle holder **104** drops off the inclined surface **114** into the recess **119**, the retraction movement is instantaneous. Simultaneously, the ramp body **108** ceases its rotation, due to the fact that the needle holder **104** is now seated in the said recess **119**, as depicted in FIG. **7**.

[0066] As soon as the needle **103** has set the cannula **105** within the body tissue **106** and has been withdrawn, the housing **102** can be lifted away from the body tissue **106**. In the presently described embodiment, an infusion apparatus **120** containing the housing **102** is depicted. When the housing **102**, as mentioned above, is lifted away from the infusion apparatus base **120*a***, then the cannula **105** is freely accessible. The cannula **105** may then be connected to an infusion channel (not shown). FIG. **8** shows the ramp body **108** with the recess **119** in the inclined surface **114** as well as the positioning pin **109**.

[0067] Another embodiment of a device for insertion and retraction of the needle is shown in the FIGS. **9-13**. The insertion device **201** includes a housing **202**, in which a needle **203** is located along with a needle holder **204** and a catheter **205**. The needle holder **204** is secured in its position in the housing **202** by a holding means **206**. The holding means **206** has a projection **207** which, when inserted into a recess **208** on the needle holder **204**, prevents activation of the device **201**. The holding means **206** is movable in the direction shown by arrow **209**, which allows the needle holder **204** to be released. The needle holder **204** can, in turn, incorporate both parts **17** and **18**, as depicted in FIGS. **1-3**. The holding apparatus **206** can then successfully act upon the plunger **18**.

[0068] A drive mechanism **210** has a lever **211**, which can pivot about a pin **212**. The lever **211** has further a rod **213**, which enters into a cavity **214** in the needle holder **204**. As depicted, the lever **211** is subjected to clockwise rotation (compare FIGS. **9** and **10**) by the force of a driving spring **215**. This driving spring **215** has one termination as a first leg **216** that abuts the housing **202** and also includes a second leg **217** that acts upon the lever **211**. A retraction spring **218** is placed about an axial pin **219**. This retraction spring **218** has a first leg **220** that abuts a housing secured projection **221** and also includes a second leg **222** that acts upon a pin **223** that projects from the needle holder **204**. The retraction spring **218** exerts a lesser force upon the needle holder **204** than does the driving spring **215**.

[0069] The position of the driving spring **215** is controlled by a guide member **224**, which is formed by the surface of a housing projection **225**. The projection **225** has a limited longitudinal dimension which runs parallel to the needle **203**. To insert the cannula **205** into body tissue **226**, the infusion device **120** first is placed against the body tissue **226**. The holding means **206** is moved in the direction of the arrow **209**, so that the projection **207** is brought out of contact with the recess **208** in the needle holder **204**.

[0070] Thereafter, the needle holder **204** is displaced in a direction toward the body tissue **226** by means of the force of the driving spring **215**. Guides **227** may direct the movement of the needle **203** in a straight line toward the body tissue **226**. As the driving spring **215** forces the needle holder **204** into the extended position, the driving spring **215** slides along the projection **225**. In accord with the FIGS. **9-11**, the driving spring **215**, lies between the projection **225** and the needle holder **204**, as seen perpendicular to the plane of the drawing, thus being behind the needle holder **204**, as depicted in FIGS. **12** and **13**.

[0071] FIG. **10** depicts the needle **203**, with its attached cannula **205**, in an extended position, so that the cannula **205** is shown as inserted into the body tissue **226**. The force necessary for this action is derived from the driving spring **215** which has been prestressed. During its movement from the retracted position (FIG. **9**) to the extended position (FIG. **10**) the movement of the driving spring **215** is regulated by the guide **224**. When the needle reaches the extended position, the driving spring **215** drops away from the guide **224** and the projection **225**, so that it then exerts no force against the needle holder **204**. This is shown in FIGS. **12** and **13**.

[0072] FIG. **12** depicts a top view of the insertion device **201** in the retracted position. The rod **213** is located within the recess **214** of the needle holder **204**, and therefore, in contact with the needle holder **204**. Accordingly, the driving spring **215** is held actively against the guide **224** of the projection **225**.

[0073] FIG. **13** depicts the insertion device **201** in the withdrawn position. Here, the rod **213** has lost engagement with the recess **214**, due to the termination of the projection **225**, and corresponding loss of engagement between the guide **224** and the driving spring **215**. The operative connective relationship between the needle holder **204** and the drive unit **210** (FIG. **11**) has been interrupted. This occurs at the time the needle **203** is in the extended position. Once the operational relationship between the driving unit **210** and the needle holder **204** has been interrupted, the retraction spring **218** is able to act upon the needle holder **204**. As shown in FIG. **11**, this causes the needle **203** to be returned to the withdrawn position. The retraction spring **218** has the ability to receive a small, prestressing force. However, its prestressing is generally due to the movement of the needle holder **204**. The force of the retraction spring **218** may be effectively smaller than that of the driving spring **215**.

[0074] In another embodiment, it is possible to permit a spring (not shown) to act transversely to the direction of driving movement of the insertion device **201**, delivering force to lever **211** and/or to the driving spring **215**. In this case, when the projection **225** terminates, the lever **211** and/or the driving spring **215** can be moved transverse to the direction of movement of the needle **203**. It is further possible that an additional guide may be provided, which would be placed on that end of the lever **211**, which is opposite the projection **225** and which would move the lever **211** and/or the driving spring **215** out of the position of FIG. **12** and into the position shown in FIG. **13**.

[0075] FIG. **14** is a schematic diagram of an exemplary infusion device microcircuit **250**. The various cannula insertion devices described above may be utilized with the depicted microcircuit, or similar microcircuits, to establish a fluidic connection between the microcircuit **250** and a patient. Other infusion devices having microcircuits are described in U.S. Published Patent Application No. 2005/0165384, published Jul. 28, 2005, the disclose of which is hereby incorporated by reference herein in its entirety. The microcircuit **250** includes a reservoir **252** that is, in this case, comprised of an elastomer bladder. A fill port **254** is used to introduce insulin to the microcircuit **250**. In this microcircuit **250**, introducing insulin via the fill port **254** fills both the reservoir **252** and a variable-volume bolus reservoir **256**. Check valves **258** prevent backflow of insulin in a number of locations.

[0076] During use, insulin is forced from the reservoir **252** by the elastomer bladder, through a filter **260**, and into two parallel flowpaths, a basal flowpath **262**, and a bolus flowpath **264**. The basal flowpath **262** delivers a constant dose of insulin to a user; the bolus flowpath **264** delivers a bolus dose of insulin to the user as needed or desired by the user. The basal flowpath **262** includes a pressure sensor **266** or other flow sensor in communication with the flowpath **262**. To deliver a bolus via the bolus flowpath **264**, the user presses a button **268** that drives a single stroke (delivering a single dose) of a bolus displacement chamber **270** and opens two valves **272**. The valves **272** are in series for safety purposes. Flow restrictors **274** dictate the fluid flow through the flowpaths **262**, **264**. The parallel flowpaths **262**, **264** join at a common channel **276** just before an internal chamber or a cannula void **278**. The cannula void **278** is formed in a cannula base **280**, which allows a point of connection to a cannula **282**. The cannula **282** extends below the skin **284** of a user, thus delivering the insulin subcutaneously. In the following figures, embodiments of cannulas are described that may be used in conjunction with the insertion devices described herein to automatically form fluidic connections within devices having microfluidic circuits.

[0077] FIG. **15**A is a schematic perspective view of an automatically-aligning cannula **300**, that includes two major components: a cannula base **302** and a cannula **304** secured thereto. The cannula base **302** includes one or more lugs **306** that project outward from the base **302**. In the depicted embodiment, two lugs **306** are located flush with a top surface **308** of the base **302**, although other locations are contemplated depending on the configurations of a housing well (described below). A resilient sheath **310** surrounds the base **302** and serves at least two purposes. First, it helps form a friction fit between the aligning cannula **300** and a housing well, when the cannula is in the extended position. Second, it helps form a seal at the interface between a chamber extension **312** (that communicates with a chamber within the base **302**) and a channel located within a device housing (described below). A port **314** in the sheath **310** aligns with the chamber extension **312**. The top surface **308** of the base **302** defines a void **316** for passage therethrough of the insertion needle. A self-sealing septum seals the void **316** to prevent leakage of fluid from the internal chamber once the insertion needle is removed.

[0078] Other configurations of sheaths are also contemplated. Alternative sheaths may entirely encase the catheter

base, or may cover a discrete area of the base, generally surrounding the chamber extension that penetrates the wall of the base. In an alternative embodiment of the catheter base, the base itself may be entirely constructed of resilient material. In such a case, a more rigid top (e.g., in the form of a laminate construction) and lugs may be desirable to ensure that the insertion mechanism can properly exert a driving force against the base.

[0079] FIG. **15**B is a schematic top view of the automatically-aligning cannula assembly of FIG. **15**A. In the extended position, the cannula base **302** of the automatically-aligning cannula **300** is secured within a housing well **330**, due to compression of the resilient sheath **310** surrounding the base **302**. In this figure, the internal chamber **334** is depicted below the septum **336** that seals the void **316**. The housing well **330** may be either integral with or otherwise secured to a housing **332** itself. The depicted embodiment shows an insertion device integral with a medical delivery device (e.g., an infusion device). Other embodiments and applications are contemplated. The housing well **330** defines one or more vertical slots **338**, sized and configured to receive the one or more lugs **306** extending from the cannula base **302**. The slots **338** are located to ensure alignment of the chamber extension **312** with the channel **340** when the cannula **300** is in the extended position. The channel **340** may be formed within a housing wall or riser **342** or may be a discrete tube secured to the housing **332**.

[0080] FIG. **16** is a schematic side section view of the automatically-aligning cannula **300** in a retracted position **360** above the housing well **330**. FIG. **18** shows the same configuration, in a section oriented orthogonal to the section depicted in FIG. **16**. In FIG. **16**, internal chamber **334** is in fluidic communication with the exterior of the base **302** (via the chamber extension **312** and port **314**). In turn, a lumen **362** formed within the cannula **304** forms a fluidic path from the chamber **334**, out of the device and into a patient, when the cannula **304** is in the extended position (FIGS. **17** and **19**). The housing well **330** is formed by an annular wall **364** that, as described above, forms therein a number of slots **338** for mating with the lugs **306**. In the depicted embodiment, the housing well **330** is not formed integrally with the housing **332**, but as described above, may be so formed in other embodiments. The annular wall **364** defines a tapered frustoconical opening **366** sized to receive the cannula base **302**. This opening **366** is in direct fluidic communication with the environment **368** outside of the device housing **332**. When the housing **332** is attached to the skin of a patient, the opening **366** will abut the skin. As depicted in FIG. **16**, when in the retracted position **360**, the channel **340** is in direct fluidic communication with the opening **366** and, consequently, the outside environment **368**.

[0081] FIG. **17** is a schematic side section view of the automatically-aligning cannula **300** in an extended position **400** within the opening **336** of the housing well **330**. FIG. **19** shows the same configuration, in a section oriented orthogonal to the section depicted in FIG. **17**. Notably, in the extended position **400**, the resilient sheath **310** firmly secures the cannula base **302** within the tapered opening **336** formed within the housing well **330**, thus sealing the opening **336**. Additionally, the tapered shape of the base **302** and the location of the resilient sheath **310** help ensure alignment of the chamber extension **312** and the channel **340**. The embodiment depicted in FIG. **17** depicts the chamber extension **312** and the channel **340** as being approximately the same diameter. This is not required; in fact, it may be advantageous to size the chamber extension **312** larger than the channel **340** to help ensure that those two conduits will be in fluidic communication when the cannula base **302** is in the extended position **400**.

[0082] In the extended position **400**, the cannula **304** extends into a patient **402**. While this application refers generally to insertion of the cannula **304** into the skin of a patient for the delivery of insulin, other uses are also contemplated. For example, the insertion device could be used to insert a cannula or catheter into a blood vessel or directly into a body organ. The automatically-aligning feature of the insertion device described herein immediately forms a fluidic connection, by aligning openings in mating surfaces, and serves the same advantages in any number of applications.

[0083] FIGS. **20**A-**20**C depict steps associated with one embodiment of inserting a automatically-aligning cannula **502**. The figures depict the insertion device **500** in the retracted (FIG. **20**A), extended (FIG. **20**B), and needle withdrawn (FIG. **20**C) positions. In the retracted position (FIG. **20**A), automatically-aligning cannula **502** is aligned along an insertion device axis L with housing well **504**. Automatically-aligning cannula **502** includes a base **506**, a cannula **508**, and a needle **510**. The needle **510** penetrates a self-sealing septum **512** and passes through first an internal chamber **514** in the base, then through a lumen **516** formed by the cannula **502**. The needle end **510***a* may terminate at or below the bottom of the cannula **508**. As mentioned above, the outer diameter of the needle **510** and the inner diameter of the cannula **508** (i.e., the size of the lumen **516**) are typically a close sliding fit. Additionally, the base **506** defines a chamber extension **518** through an outer wall **520** of the base **506**. The chamber extension **518** defines an chamber extension axis A_E, depicted here as being orthogonal to the insertion device axis L. Other orientations of the chamber extension axis A_E are contemplated, including those perpendicular to or parallel with the outer wall **520**.

[0084] The outer wall **520** is, in certain embodiments, tapered at an angle a relative to a centerline of the cannula **502** and the colinear insertion device axis L. Angle α is also substantially the same as corresponding angle α' of walls **522** in the housing well **504**. In general, angles α and α' aid in seating the automatically-aligning cannula **502** within the housing well **504**. Channel **524** is located within the wall **522** and defines a channel axis A_C that may be orthogonal to axis L, or orthogonal to the inner edge **526** of wall **522**, or otherwise oriented.

[0085] To use the insertion device **500**, a medical device **528** (for example, an insulin infusion device) containing the insertion device **500** is first placed against the skin **530** of a patient, such that an opening **532** defined at least in part by the housing well **504** is proximate the skin **530**. In this orientation, chamber extension **518** is in fluidic communication with the interior of the device **528**, as is the lumen **516** and channel **524** (since the opening **532** is located proximate the interior of the device **528**, these elements are also in fluidic communication with the opening **524**). In the retracted position, both the chamber extension **518** and the lumen **516** are located remotely from the channel **524**, or, more specifically, they are not in fluidic communication with the channel **524**. In the retracted position, the chamber extension **518**, lumen **516**, and channel **524** are in fluidic communication only with the interior of the device **528**. However, neither the chamber extension **518** nor lumen **516** are in fluidic communication with the channel **524**. Fluidic communication is not possible

between the channel **524** and lumen **516** (via the chamber extension **518** and internal chamber **514**) until the cannula base **506** is in the extended position. To reach this position, a force F_{NB} is applied to either or both of the needle **510** and cannula base **506** to drive both into the housing well **504**.

[0086] The extended position of the insertion device **500** is depicted in FIG. **20**B. In this position, cannula **508** and needle end **510** both penetrate the skin **530** of the patient. Additionally, when in the extended position, channel axis A_C and chamber extension axis A_E are aligned along a common axis A. While FIG. **20**B depicts actual alignment of axes A_C and A_E, alignment of axes is not required. In other embodiments, for example, where one or both of the axis are not orthogonal to the device axis L (see FIGS. **16-17**, for example), intersection or close proximity of the axes sufficient to ensure fluidic communication from the channel **524** to the skin **530** of the patient is acceptable. In other embodiments, sufficient overlapping of areas of the channels would be sufficient to ensure fluidic communication. Although depicted schematically in the figures with significant clearance to facilitate depiction, needle **510** is a close sliding fit within the lumen **516** of the cannula **508**. Accordingly, to allow unrestricted fluidic communication from the channel **524** to the patient, needle **510** is removed from the cannula **508**. To do so, a force F_N is applied to the needle **510** to withdraw it from the cannula **508**. The various embodiments of the insertion devices described hereinabove may be used to perform this function. The friction fit between the cannula base **502** and the housing well **504** retains the cannula base **502** in place and seals the fluidic communication path.

[0087] The withdrawn position of the insertion device **500** is depicted in FIG. **20**C. In this position, the needle **510** has been withdrawn from the cannula base **502**, while the base **502** itself remains in place within the housing well **504**. Upon withdrawal, the self-sealing septum **512** closes behind the needle **510** to ensure a fluid tight seal. Once the needle **510** is withdrawn, there is fluidic communication from the device **528** to the patient, via the channel **524**, chamber extension **518**, internal chamber **514**, and the lumen **516**. In an alternative embodiment, the needle is withdrawn completely from the patient, but need not be withdrawn completely from the cannula base. Since the needle is closely fit within the lumen of the cannula, the flow of insulin may still be prevented by the position of the needle. In that regard, a hollow needle having an opening defined in the sidewall thereof may allow for the passage of insulin into the hollow needle. The insulin then passes through the cannula lumen and into the patient.

[0088] The embodiments of the automatically-aligning cannula system depicted in FIGS. **14-20**C have distinct advantages over known cannula insertion systems that utilize a hollow needle or tube to form a fluidic connection between a fluid flow passage and a lumen of a cannula. In such systems, the hollow needle penetrates a septum that seals the fluid flow passage prior to use (in this case, the fluid flow passage is always isolated from the interior of the device by the septum). In contrast, the disclosed automatically-aligning cannula system does not require a needle and septum to create a fluid seal. In that regard, the disclosed invention presents a more elegant solution that reduces manufacturing costs and ensures proper operation. The surface-to-surface sealing configuration of the present invention reduces manufacturing costs by eliminating the need for an additional needle, septum, or complex injection molded parts to incorporate those elements. Additionally, assembly costs are similarly reduced, as the needle and septum need not be incorporated into the device.

[0089] Instead of using a septum and a penetrating needle to ensure a fluidic connection, the disclosed cannula system aligns two curved surfaces, namely, the curved inner wall of the housing well and the outer surface of the frustoconical cannula base. The resilient sheath helps to seal any imperfections formed during the manufacturing process, thus improving the friction fit of the cannula base within the housing well. Additionally, the sheath aids in sealing the fluidic connection between the chamber extension and the channel, thus preventing leakage of fluid. By eliminating the needle and septum, both the chamber extension and the channel are in fluidic communication (i.e., not isolated) from the interior of the device when the cannula base is in the retracted position. In the extended position, the chamber extension and channel are placed in fluidic communication by alignment, while the connection is sealed by the sheath.

[0090] The various components utilized in the device described herein may be metal, glass, and/or any type of polymer suitable for sterilization and useful for delivering insulin or other medicaments subcutaneously. Polyurethane, polypropylene, PVC, PVDC, EVA, and others, are contemplated for use. More specifically, medical-grade plastics may be utilized for the cannula itself, as well as other components that contact or otherwise penetrate the body of the patient. Needles and springs made from medical-grade stainless steel are also desirable, to prevent failure associated with use.

[0091] While there have been described herein what are to be considered exemplary and preferred embodiments of the present invention, other modifications of the invention will become apparent to those skilled in the art from the teachings herein. The particular methods of manufacture and geometries disclosed herein are exemplary in nature and are not to be considered limiting. It is therefore desired to be secured in the appended claims all such modifications as fall within the spirit and scope of the invention. Accordingly, what is desired to be secured by Letters Patent is the invention as defined and differentiated in the following claims, and all equivalents.

What is claimed is:

1. A cannula insertion device comprising:

a housing defining an opening for receiving therethrough a cannula and further defining a channel; and

a cannula forming a lumen, the cannula adapted for sliding movement within the housing from a retracted position to an extended position, wherein:

when the cannula is in the retracted position, the lumen is located remotely from the channel and the channel is in fluidic communication with the opening; and

when the cannula is in the extended position, the lumen is in fluidic communication with the channel.

2. The cannula insertion device of claim **1** further comprising a base connected to the cannula, the base defining an internal chamber in fluidic communication with the lumen.

3. The cannula insertion device of claim **2**, wherein the base further defines a chamber extension in fluidic communication with the internal chamber.

4. The cannula insertion device of claim **3**, wherein when the cannula is in the extended position, the chamber extension is aligned with the channel.

5. The cannula insertion device of claim **3**, wherein a wall of the base defines the chamber extension.

6. The cannula insertion device of claim **5**, wherein the base includes a resilient sheath, the sheath defining a port substantially aligned with the chamber extension.

7. The cannula insertion device of claim **6**, wherein when the cannula is in the extended position, the port is aligned with the channel.

8. The cannula insertion device of claim **6**, wherein when the cannula is in the extended position, the sheath seals the opening.

9. The cannula insertion device of claim **1**, further comprising a plunger for driving the cannula from the retracted position to the extended position.

10. The cannula insertion device of claim **9**, further comprising a needle disposed in the lumen when the cannula is in the retracted position.

11. The cannula insertion device of claim **10**, wherein the needle is adapted to be automatically withdrawn from the lumen when the cannula is in the extended position.

12. The cannula insertion device of claim **1**, wherein the needle is adapted to be automatically disconnected from the plunger when the cannula is in the extended position.

13. A method of inserting a cannula, the method comprising the steps of:

providing a housing defining an opening for receiving therethrough a cannula and further defining a channel;

providing a cannula forming a lumen, the cannula adapted for sliding movement within the housing from a retracted position to an extended position; and

extending the cannula from the retracted position, in which the lumen is located remotely from the channel and the channel is in fluidic communication with the opening, to the extended position, in which the lumen is in fluidic communication with the channel.

14. The method of claim **13**, further comprising the step of piercing a skin of a patient with a needle and the cannula as the cannula moves from the retracted position to the extended position.

15. The method of claim **14**, further comprising the step of withdrawing the needle from the lumen automatically when the cannula is in the extended position.

16. The method of claim **14**, wherein a plunger extends the cannula from the retracted position to the extended position, the plunger in contact with the needle.

17. The method of claim **16**, further comprising the step of disconnecting the needle from the plunger when the cannula is in the extended position.

18. The method of claim **13**, further comprising the step of sealing the opening with the cannula when the cannula is in the extended position.

* * * * *