US 20080114280A1

(19) United States

(12) Patent Application Publication

Stafford

(10) Pub. No.: US 2008/0114280 A1

(43) Pub. Date: May 15, 2008

(54) VARIABLE SPEED SENSOR INSERTION DEVICES AND METHODS OF USE

(76) Inventor: Gary Ashley Stafford, Hayward, CA (US)

Correspondence Address:
JACKSON & CO., LLP
6114 LA SALLE AVENUE, #507
OAKLAND, CA 94611-2802

(21) Appl. No.: 11/552,072

(22) Filed: Oct. 23, 2006

Publication Classification

(51) Int. Cl.
A61N 1/30 (2006.01)

(52) U.S. Cl. 604/19

(57) ABSTRACT

An automatic sensor inserter is disclosed for placing a transcutaneous sensor into the skin of a living body. According to aspects of the invention, characteristics of the insertion such as sensor insertion speed may be varied by a user. In some embodiments, insertion speed may be varied by changing an amount of drive spring compression. The amount of spring compression may be selected from a continuous range of settings and/or it may be selected from a finite number of discrete settings. Methods associated with the use of the automatic inserter are also covered.

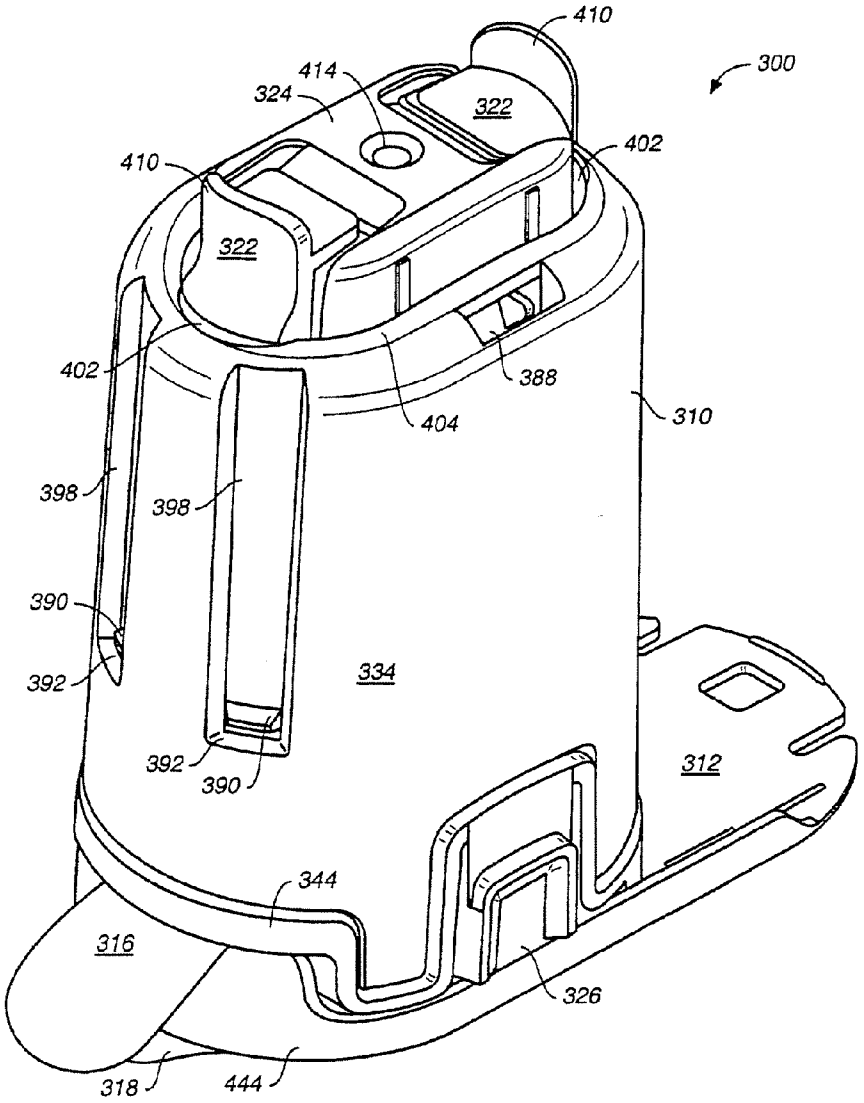

DEXCOM EXHIBIT 1042

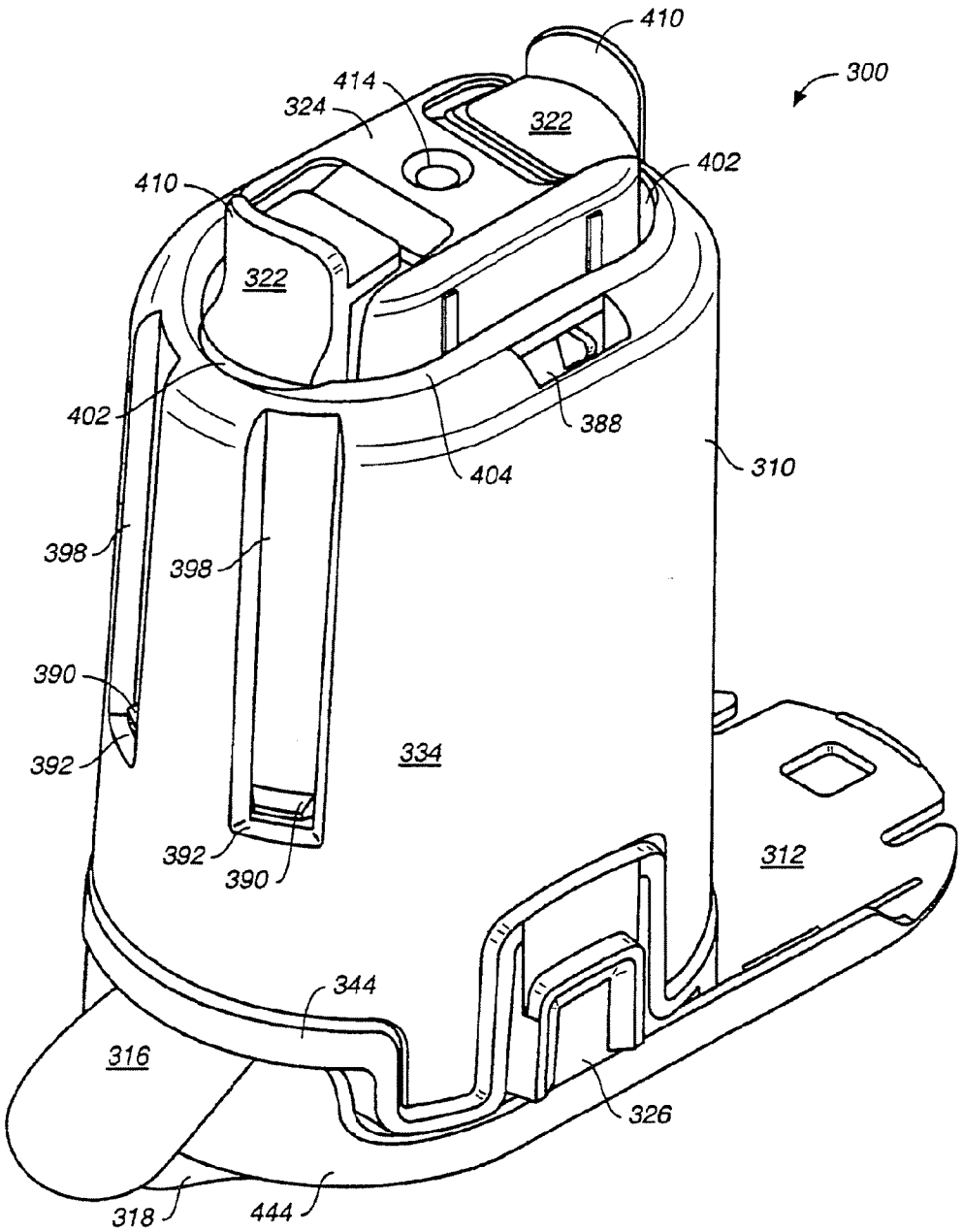
410
300
414
324
322
402
410
322
402
388
404
310
398
398
390
392
334
392
390
312
344
316
326
318
444

FIG. 1

FIG. 2

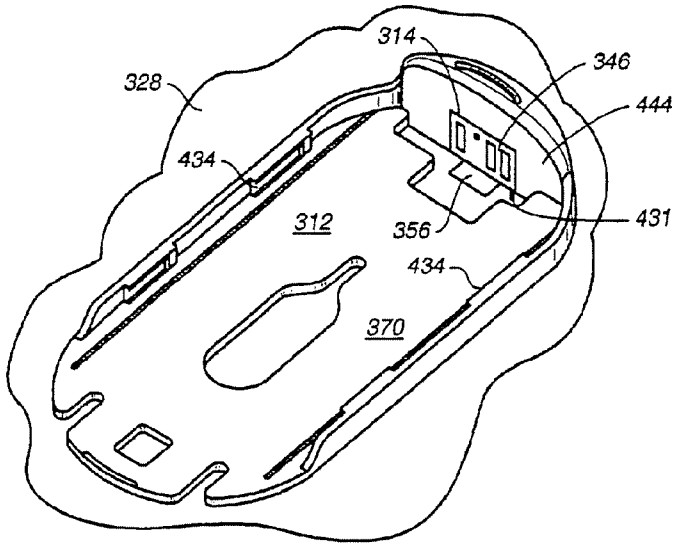

FIG. 3

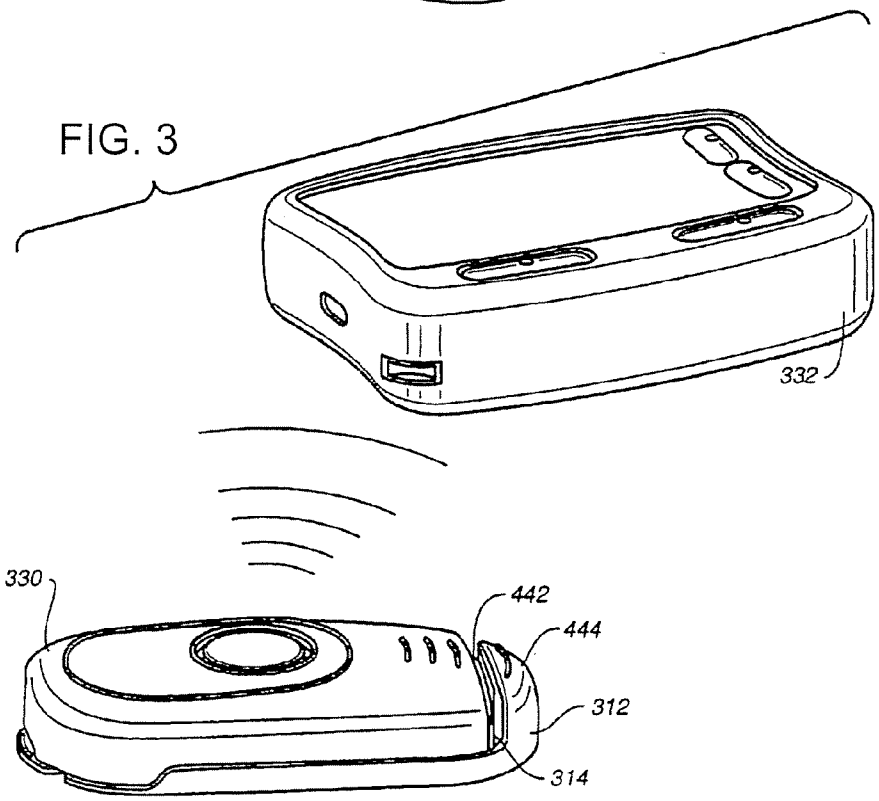

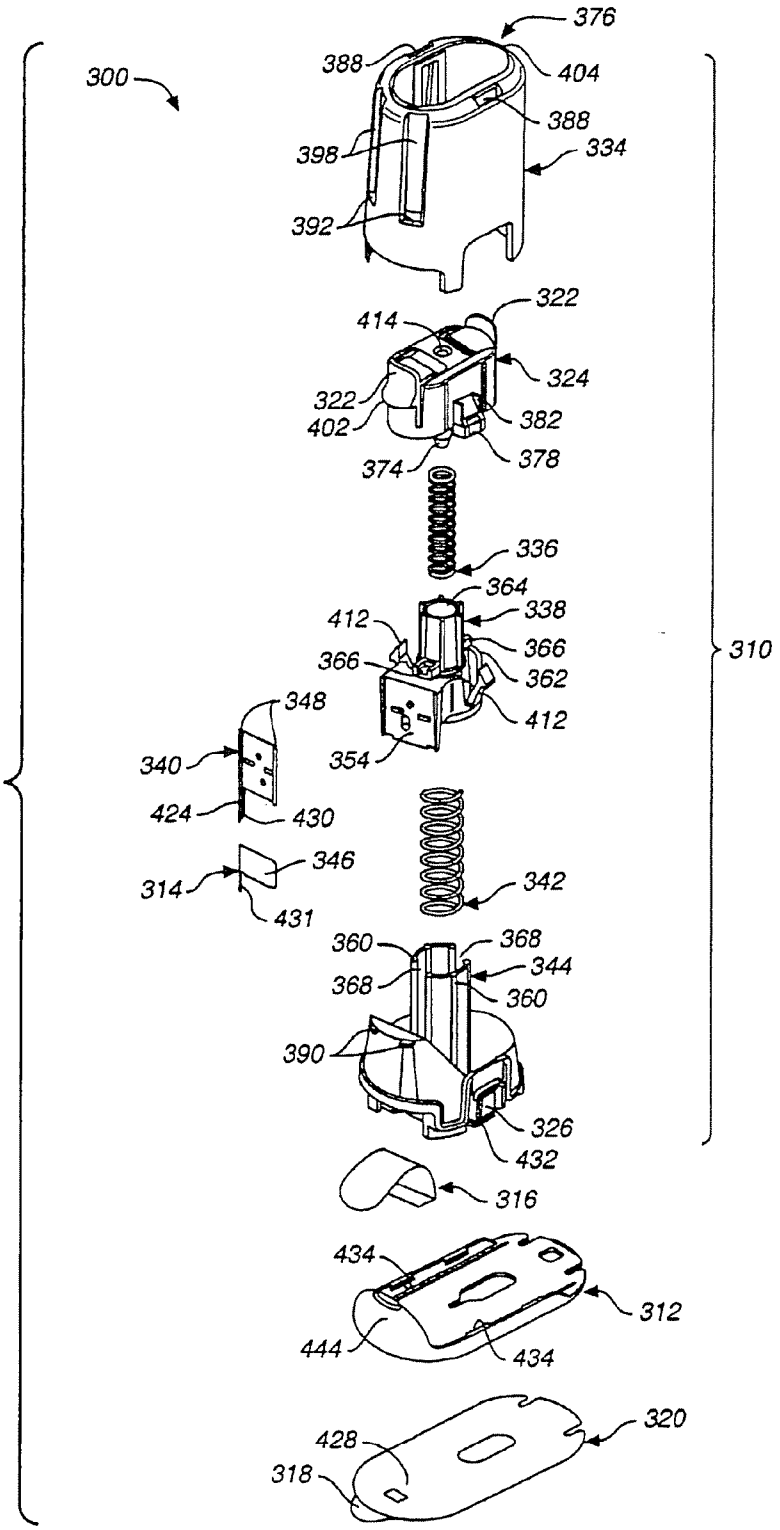
376
300
388
404
388
398
334
392
322
414
324
322
402
382
374
378
336
364
338
412
366
366
362
412
348
340
354
424
430
346
314
431
342
360
368
368
344
360
390
326
432
316
434
312
444
434
320
428
318
310

FIG. 4

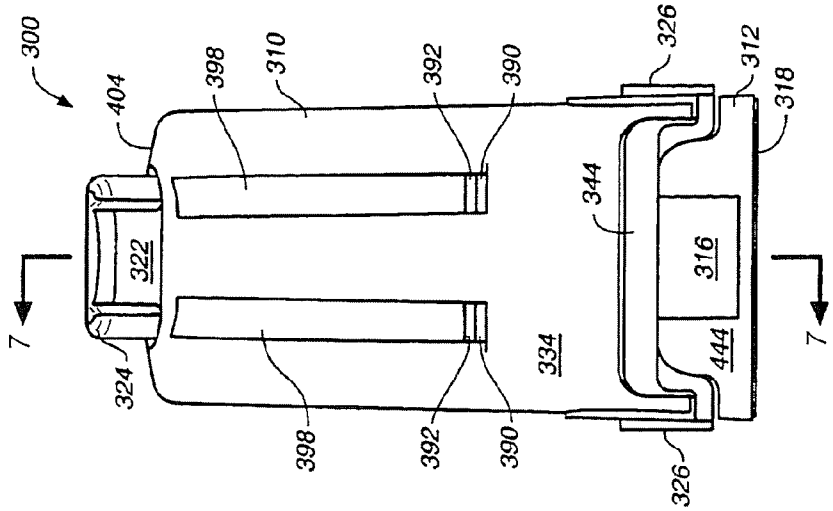
300
404
398
310
392
390
326
312
318
322
344
316
7
324
334
444
398
392
390
326
7

FIG. 6

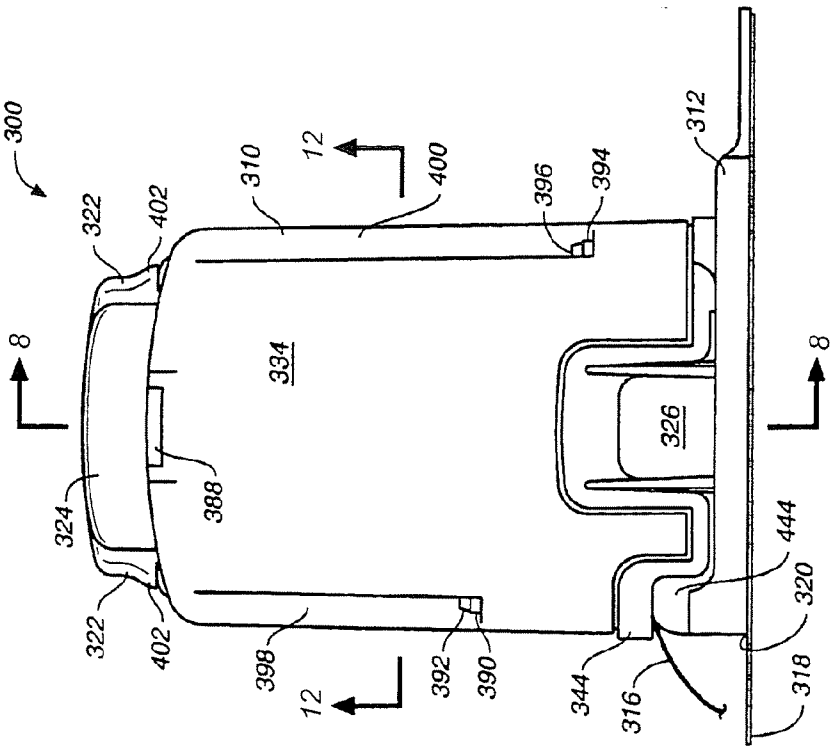
300
322
402
310
12
400
396
394
312
8
334
326
324
388
444
322
402
398
392
390
344
316
320
318
12
8

FIG. 5

FIG. 7

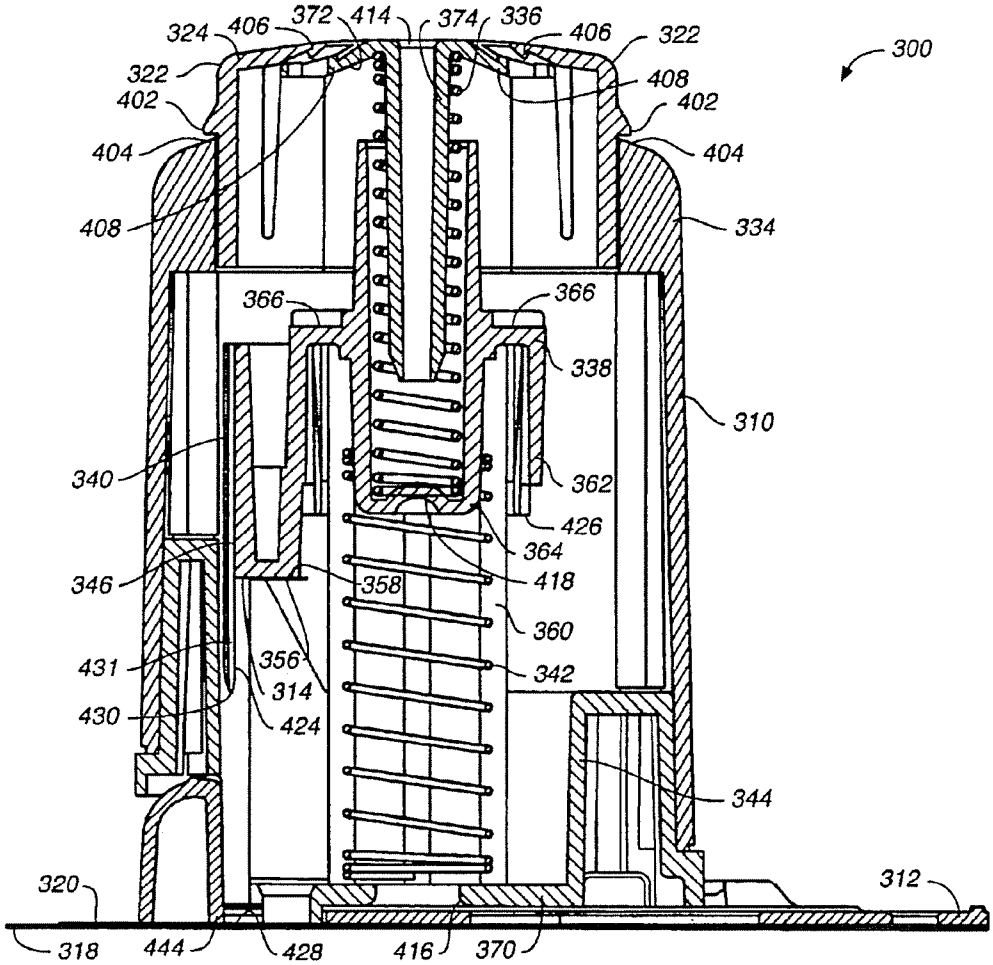
300
324
406
372
414
374
336
406
322
322
408
402
402
404
404
408
334
366
366
338
310
340
362
426
364
346
358
418
360
431
356
342
314
430
424
344
320
312
318
444
428
416
370

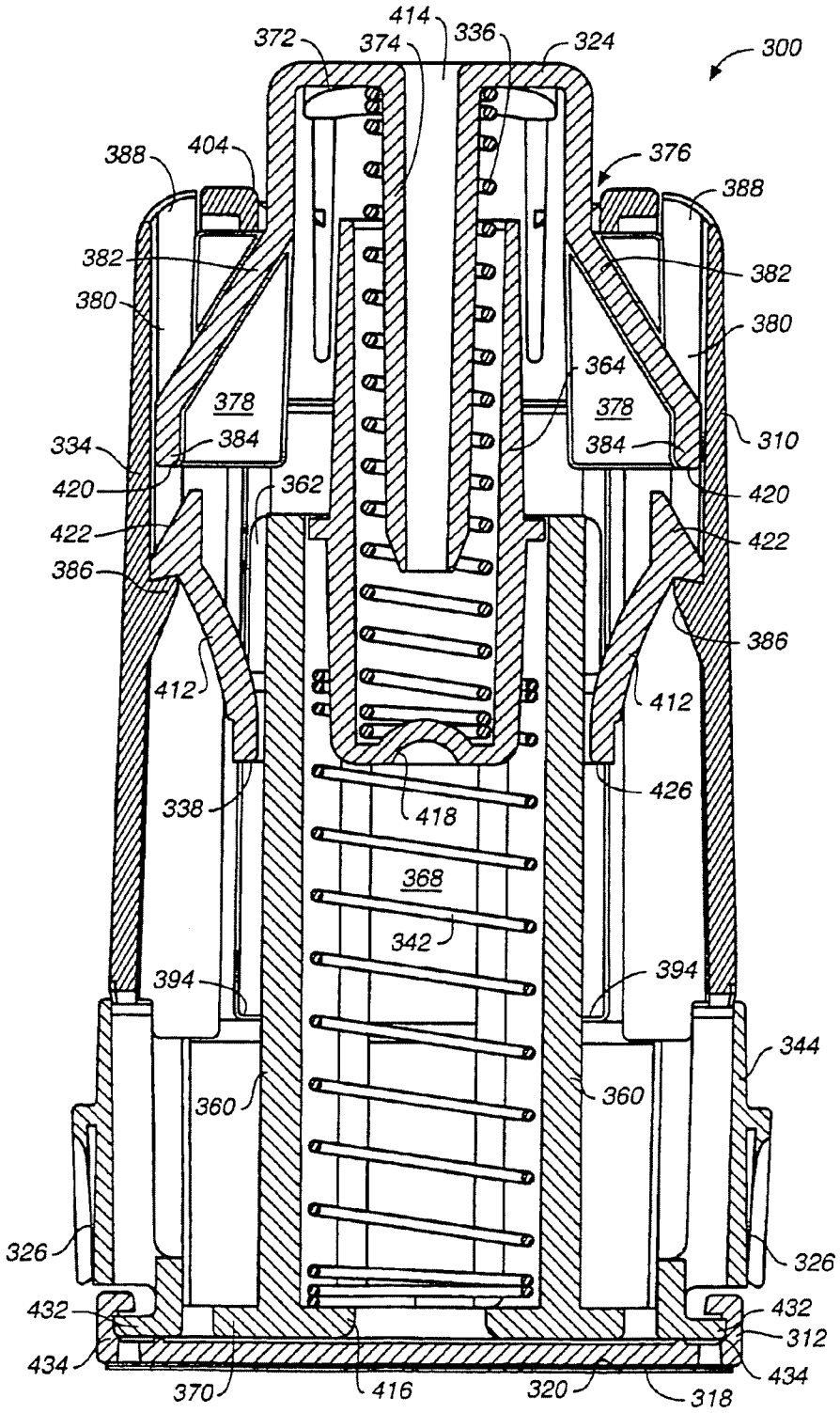
414
372
374
336
324
300
388
404
376
388
382
382
380
380
364
378
378
334
384
384
310
420
362
420
422
422
386
386
412
412
426
338
418
368
342
394
394
344
360
360
326
326
432
432
312
434
434
370
416
320
318

FIG. 8

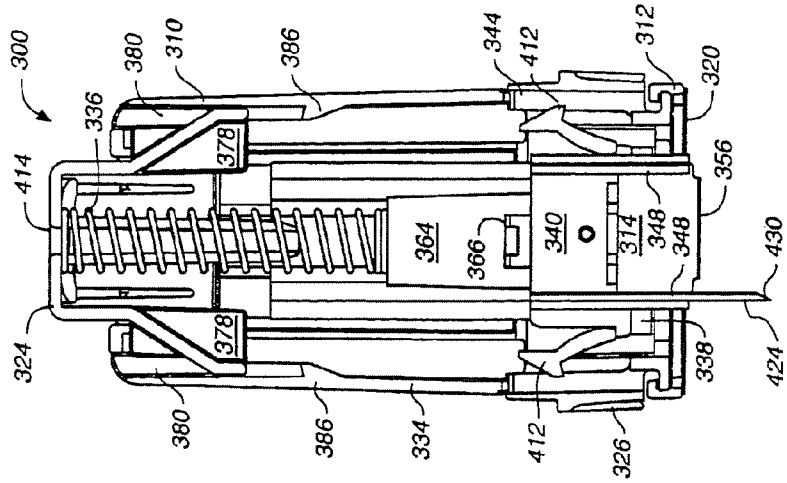

FIG. 11

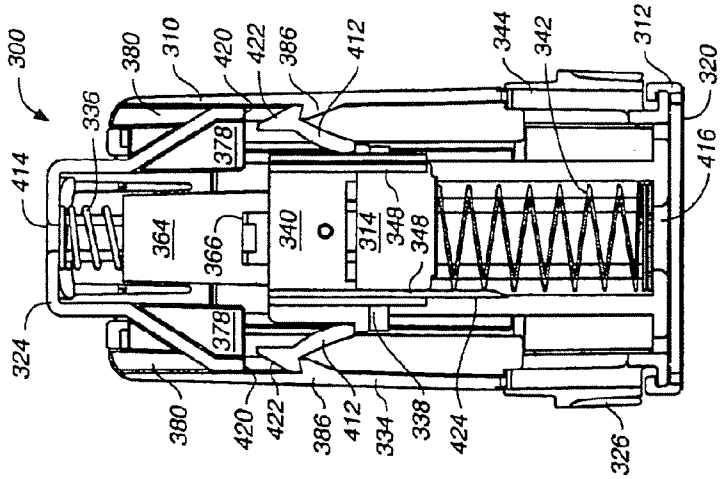

FIG. 10

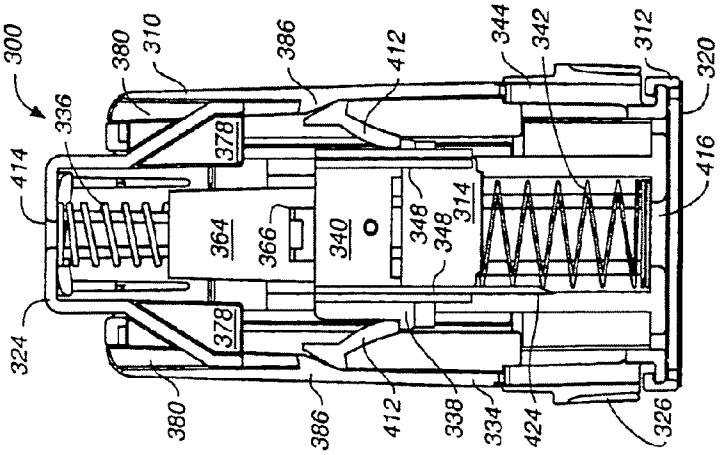

FIG. 9

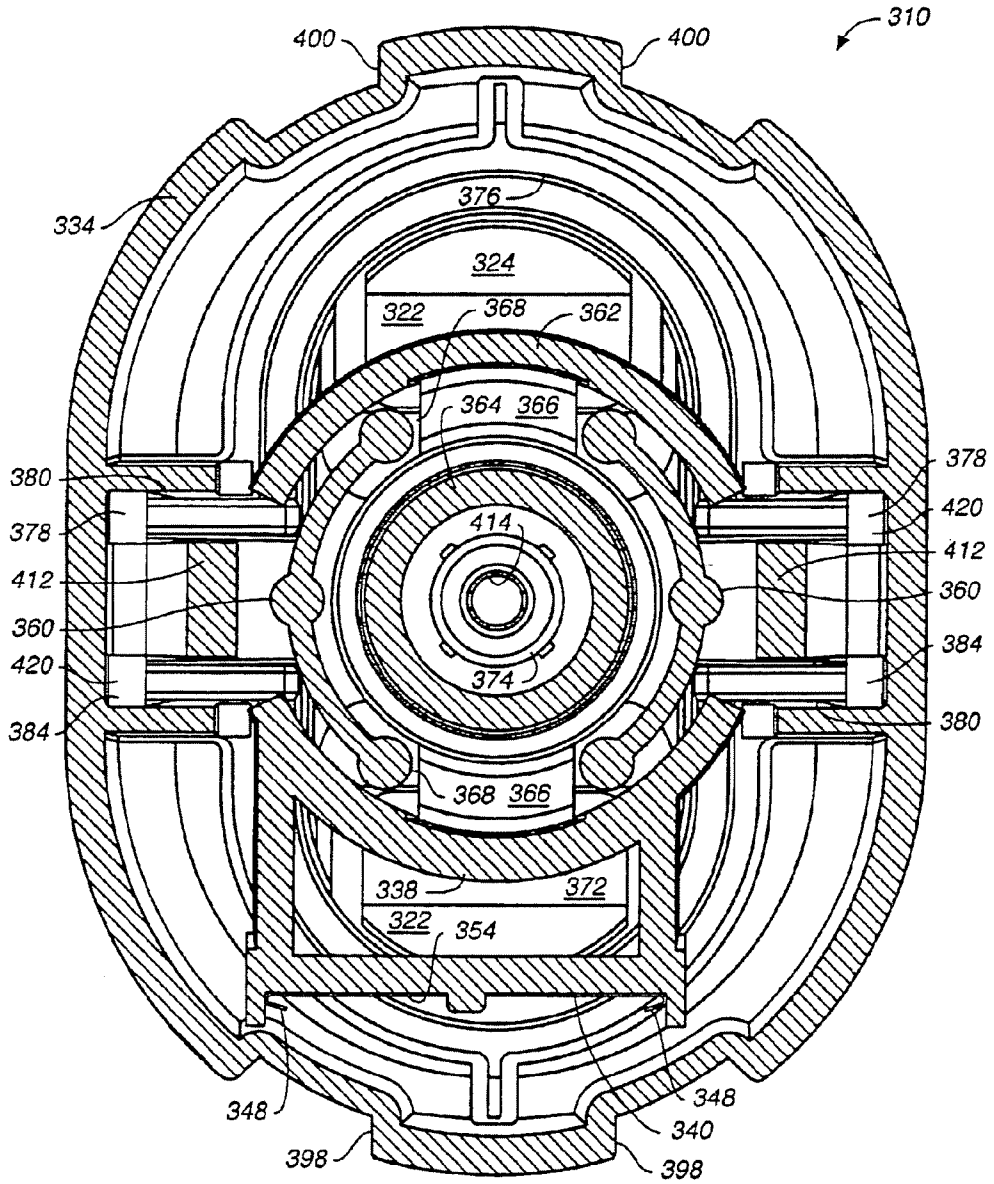
310
400
400
334
376
324
322
368
362
364
366
380
378
414
420
412
360
384
374
368
366
338
372
322
354
348
348
340
398
398

FIG. 12

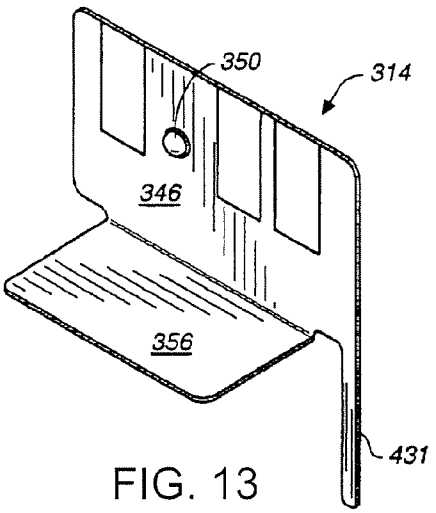

FIG. 13

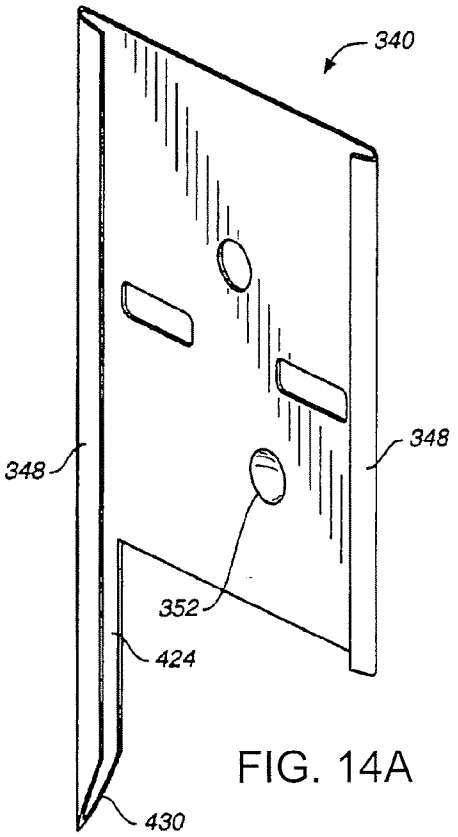

FIG. 14A

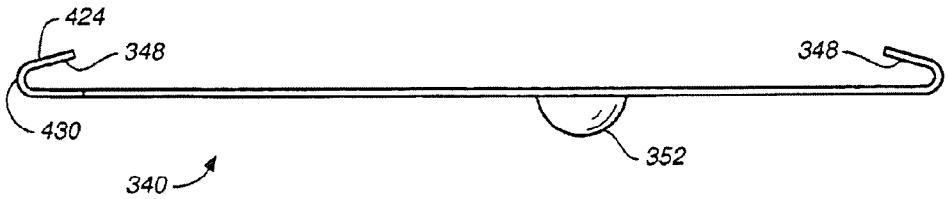

FIG. 14B

FIG. 15

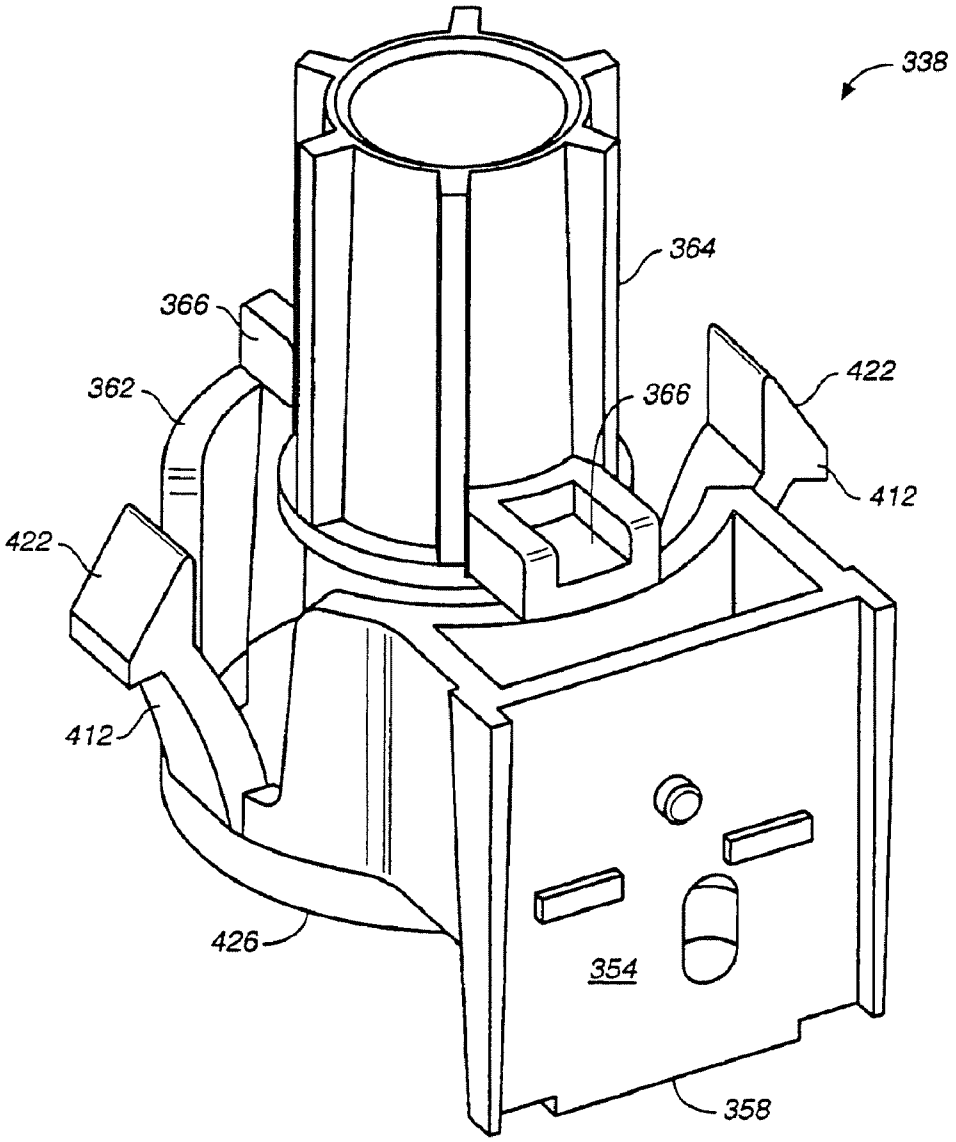

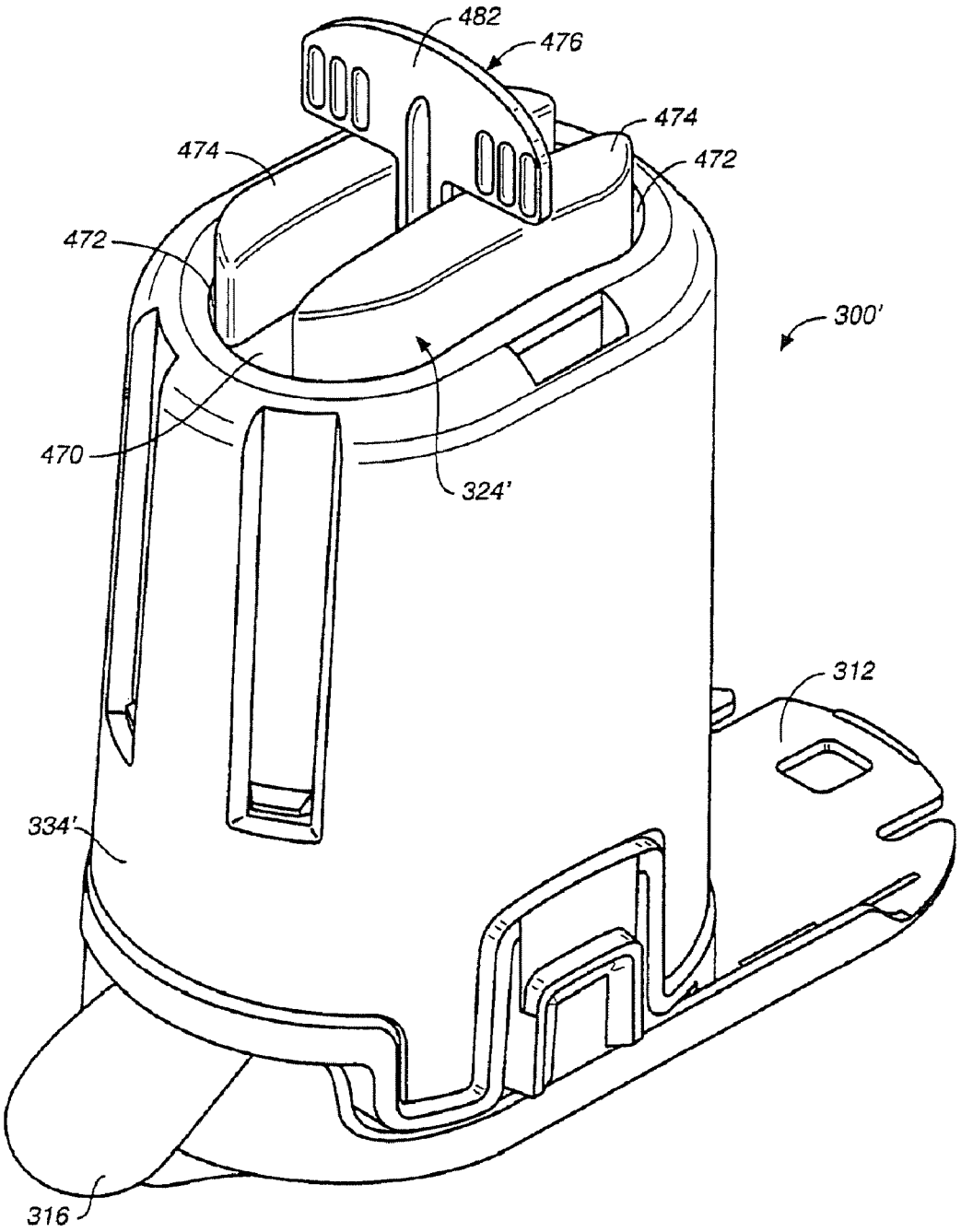

FIG. 16A

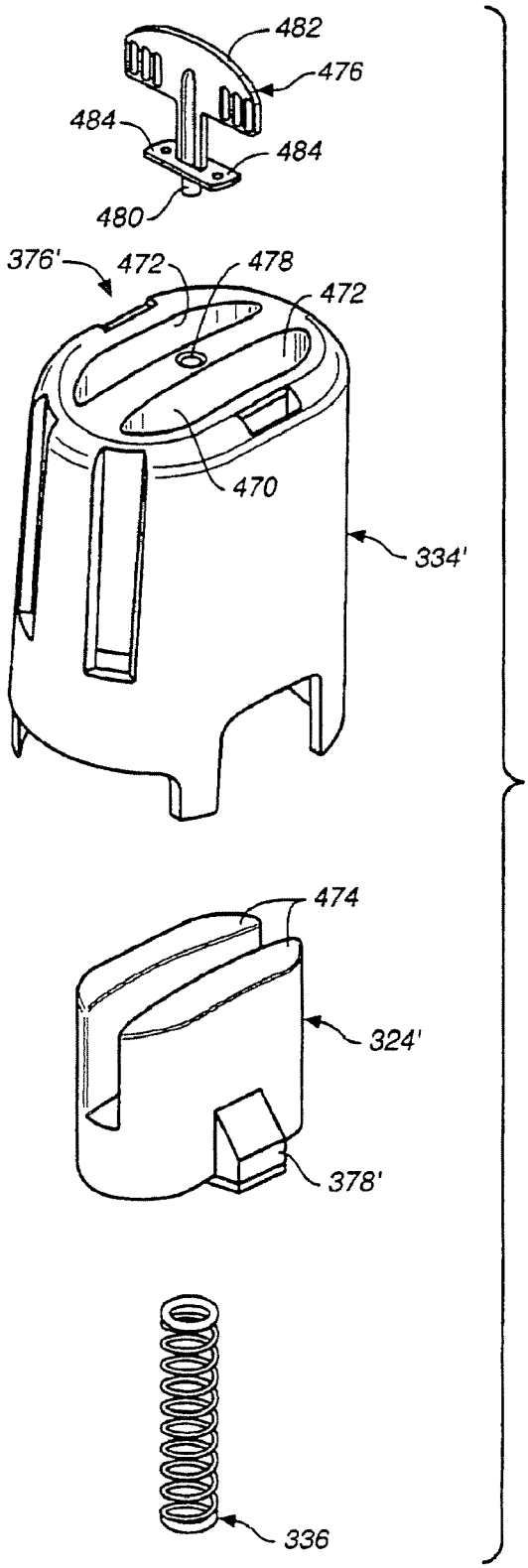

FIG. 16B

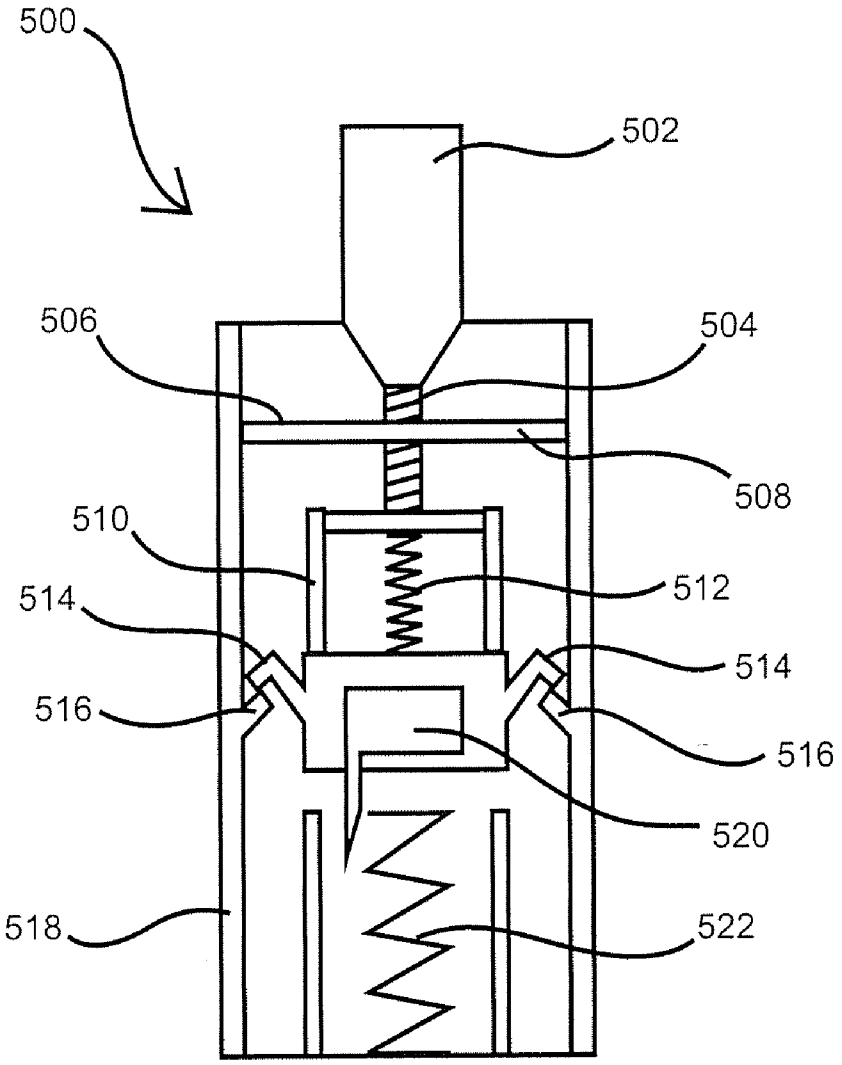

FIG. 17

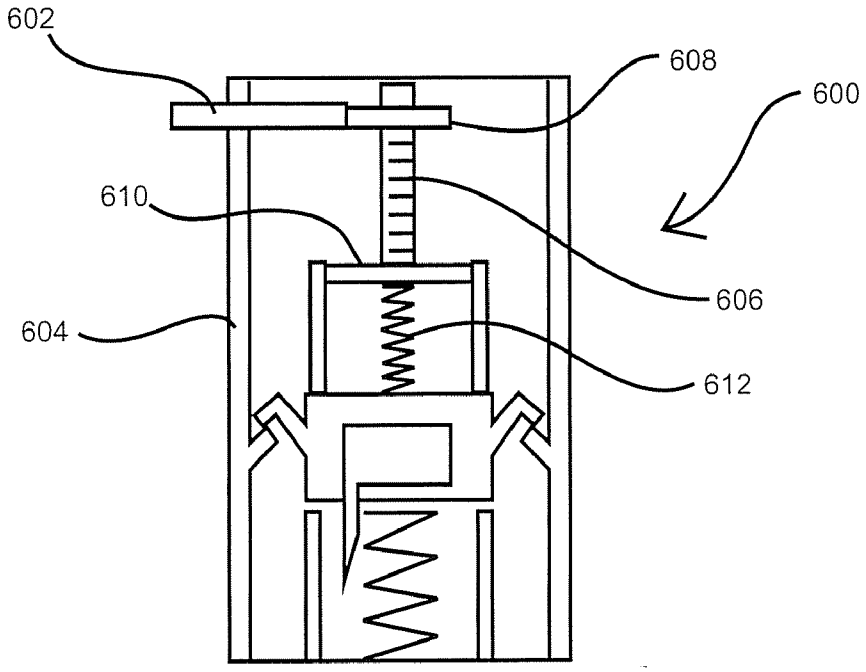

FIG. 18A

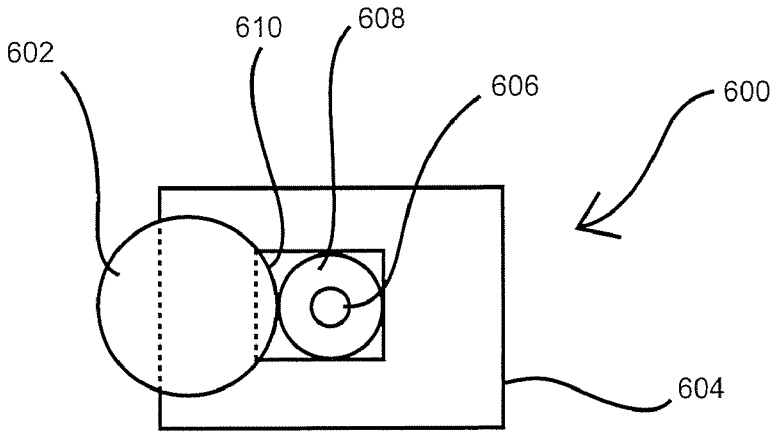

FIG. 18B

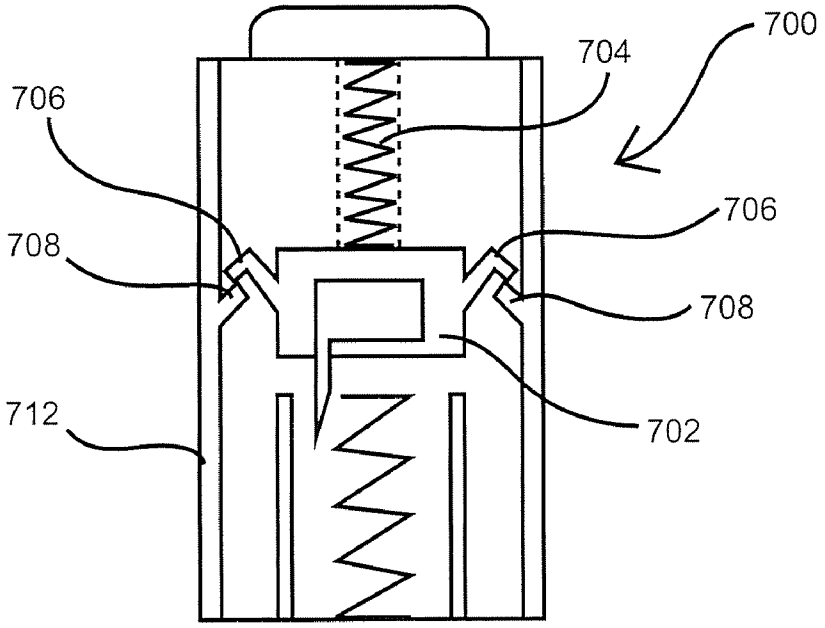

FIG. 19A

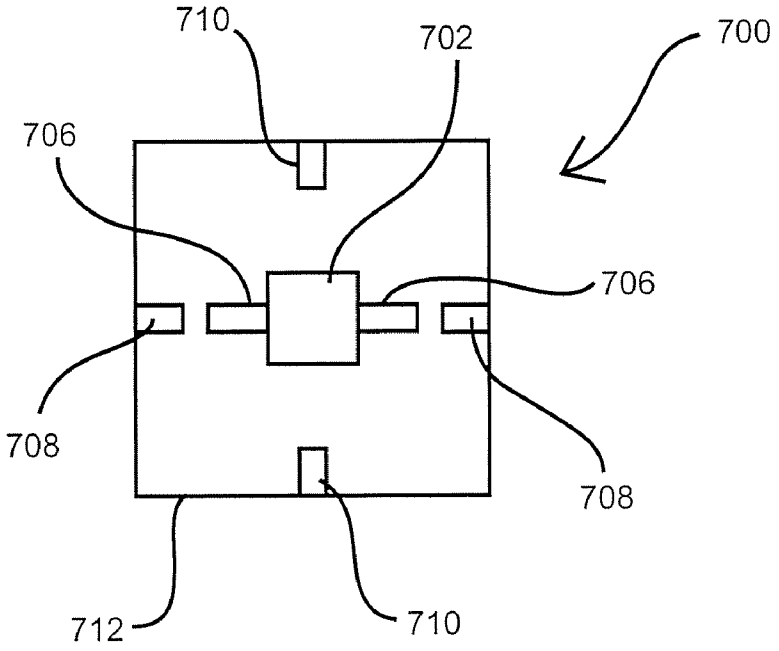

FIG. 19B

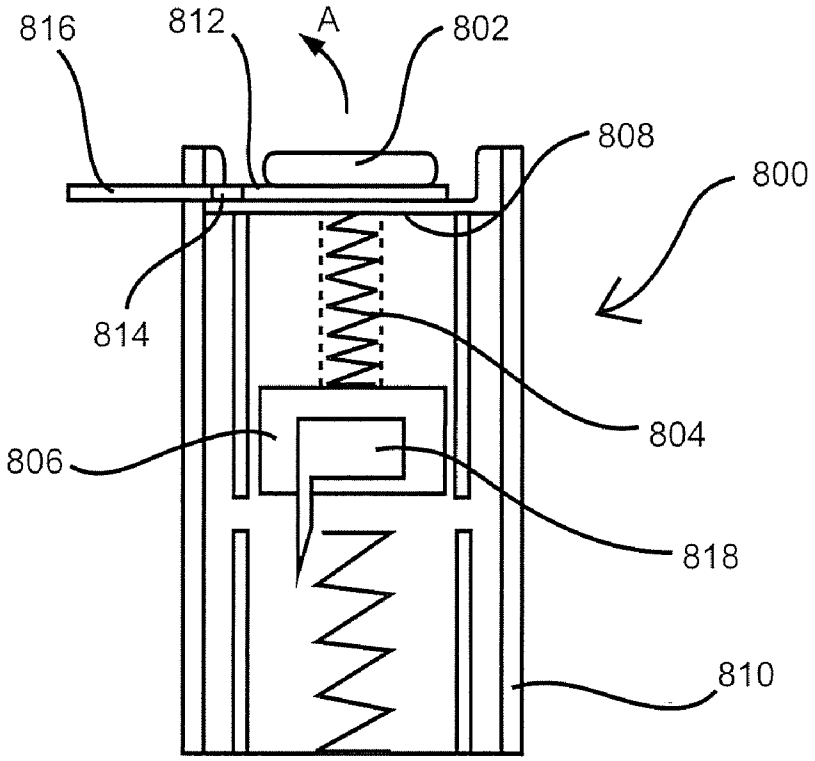

FIG. 20A

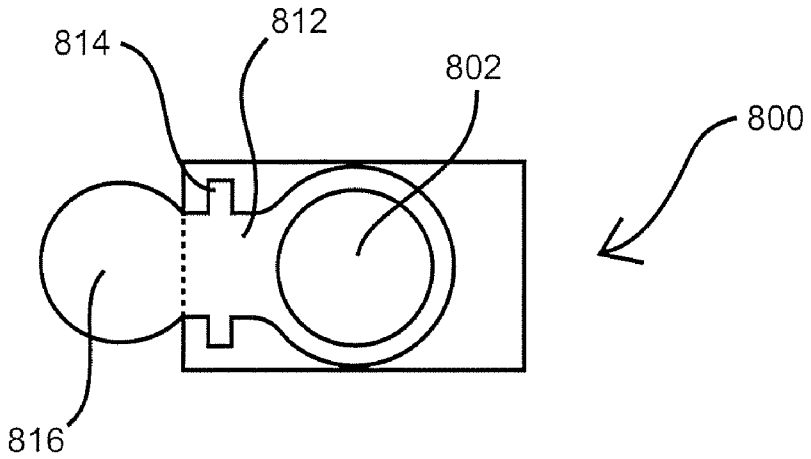

FIG. 20B

VARIABLE SPEED SENSOR INSERTION DEVICES AND METHODS OF USE

FIELD OF THE INVENTION

[0001] The present invention relates to medical devices for monitoring analytes in a living body, such as monitoring glucose levels in people with diabetes. More particularly, the invention relates to automatic devices for inserting analyte sensors into the skin of a patient.

BACKGROUND OF THE INVENTION

[0002] In recent years, people with diabetes have typically measured their blood glucose level by lancing a finger tip or other body location to draw blood, applying the blood to a disposable test strip in a hand-held meter and allowing the meter and strip to perform an electrochemical test of the blood to determine the current glucose concentration. Such discrete, in vitro testing is typically conducted at least several times per day. Continuous in vivo glucose monitoring devices are currently being developed to replace in vitro devices. Some of these continuous systems employ a disposable, transcutaneous sensor that is inserted into the skin to measure glucose concentrations in interstitial fluid. A portion of the sensor protrudes from the skin and is coupled with a durable controller and transmitter unit that is attached to the skin with adhesive. A wireless handheld unit is used in combination with the skin-mounted transmitter and sensor to receive glucose readings periodically, such as once a minute. Every three, five or seven days, the disposable sensor is removed and replaced with a fresh sensor which is again coupled to the reusable controller and transmitter unit. With this arrangement, a person with diabetes may continuously monitor their glucose level with the handheld unit. Detailed descriptions of such a continuous glucose monitoring system and its use are provided in U.S. Pat. No. 6,175,752, issued to TheraSense, Inc. on Jan. 16, 2001, which is incorporated by reference herein in its entirety.

[0003] Transcutaneous analyte sensors may be inserted into the user's skin using an automatic introducer or inserter device, such as those described in U.S. patent application Ser. No. 10/703,214, published Jul. 8, 2004 under publication number 20040133164, incorporated herein by reference in its entirety. Most sensor inserter devices described in the above published patent application have two springs, one for driving an introducer sharp and a sensor into the skin of a patient, and another for retracting the introducer sharp, leaving the sensor behind in the patient's skin. The spring arrangements are chosen to provide an introducer sharp and sensor speed optimized to insert the sensor into a typical patient.

SUMMARY OF THE INVENTION

[0004] According to aspects of some embodiments of the present invention, it is recognized that a sensor introducer having variable insertion speeds, insertion forces, travel distances, accelerations and/or other characteristics of sensor insertion that may be adjusted for different situations and/or different patients may be desirable. For example, due to physiological factors and trauma that may result from high speed automatic insertion of an analyte sensor, there may be a need to slow down and control the velocity of the puncturing apparatus. In other situations, such as for patients with different skin characteristics such as higher than average skin thickness and/or skin density, it may be desirable to speed up the velocity of the puncturing device. Alternatively, situations involving inserting sensors into different locations on a patient, such as the arm, torso or thigh, may benefit from the use of a single inserter or single inserter type with a sensor insertion velocity that may be sped up or slowed down. According to other aspects of the invention, a single inserter type may be configured to alternately insert different types sensors and/or other devices, in which case an insertion setting may be set depending on which type of sensor or device is currently being inserted.

[0005] According to other aspects of the invention, a sensor insertion device may be provided with an adjustable feature allowing a user to adjust the sensor insertion speed prior to use.

[0006] According to other aspects of the invention, a sensor insertion device may be provided with an adjustment feature allowing the insertion speed to be variably adjusted over a range of velocities.

[0007] According to other aspects of the invention, a sensor insertion device may be provided with an adjustment feature allowing the insertion speed to be selected from among a finite number of discrete settings.

[0008] According to other aspects of the invention, a sensor insertion device may be provided with an adjustment feature allowing the insertion speed to be adjusted by changing the amount of compression of a drive spring. In one embodiment, a spring compression may be adjusted by using a knob. In another embodiment, a spring compression may be adjusted by turning a thumbwheel. In another embodiment, a spring compression may be adjusted by changing the orientation of a component of the inserter. In another embodiment, a spring compression may be adjusted by using one or more magnets.

[0009] Various analytes may be monitored by sensors inserted into a patient according to aspects of the present invention. These analytes may include but are not limited to lactate, acetyl choline, amylase, bilirubin, cholesterol, chorionic gonadotropin, creatine kinase (e.g., CK-MB), creatine, DNA, fructosamine, glucose, glutamine, growth honnones, hematocrit, hemoglobin (e.g. HbAlc), honnones, ketones, lactate, oxygen, peroxide, prostate-specific antigen, prothrombin, RNA, thyroid stimulating hormone, and troponin, in samples of body fluid. Monitoring systems may also be configured to determine the concentration of drugs, such as, for example, antibiotics (e.g., gentamicin, vancomycin, and the like), digitoxin, digoxin, drugs of abuse, theophylline, warfarin and the like. Such analytes may be monitored in blood, interstitial fluid and other bodily fluids.

[0010] In certain embodiments, other types of sensors may be inserted into a body using an inserter constructed according to aspects of the present invention. Such sensors may include but are not limited to devices for measuring physiologic parameters such temperatures, pressures, respiration, pulse, movement and electrical signals, through means such as mechanical, chemical, electrical, optical or otherwise. In addition to or instead of inserting a sensor(s) into a body, an inserter constructed according to aspects of the present

invention may insert medicine, fluid delivery devices such as infusion sets, cannulas or needles, or other medical devices.

BRIEF DESCRIPTION OF THE DRAWINGS

[0011] Each of the figures diagrammatically illustrates aspects of the invention. Of these:

[0012] FIG. **1** is a perspective view showing an exemplary embodiment of a sensor inserter and adhesive mount constructed according to aspects of the present invention.

[0013] FIG. **2** is a perspective view of an adhesive mount and sensor attached to a patient's skin.

[0014] FIG. **3** is a perspective view of a transmitter attached to an adhesive mount and transmitting to a hand-held receiver.

[0015] FIG. **4** is an exploded perspective view of the embodiment shown in FIG. **1**.

[0016] FIG. **5** is a side elevation view of the embodiment shown in FIG. **1**.

[0017] FIG. **6** is an end elevation view of the embodiment shown in FIG. **1**.

[0018] FIG. **7** is a cross-sectional view taken along line **7-7** in FIG. **6**.

[0019] FIG. **8** is a cross-sectional view taken along line **8-8** in FIG. **5**.

[0020] FIG. **9** is a broken away view similar to FIG. **8**, showing a shuttle in a neutral position.

[0021] FIG. **10** is a broken away view similar to FIG. **8**, showing a shuttle in a cocked position.

[0022] FIG. **11** is a broken away view similar to FIG. **8**, showing a shuttle in an insertion position.

[0023] FIG. **12** is a cross-sectional view taken along line **12-12** in FIG. **5**.

[0024] FIG. **13** is a perspective view of a transcutaneously implantable sensor.

[0025] FIG. **14**A is a perspective view of a sensor introducer.

[0026] FIG. **14**B is a bottom view of the introducer shown in FIG. **14**A.

[0027] FIG. **15** is a perspective view of a shuttle member.

[0028] FIG. **16**A is a perspective view of an alternative embodiment of a sensor inserter kit.

[0029] FIG. **16**B is an exploded view of some of the components shown assembled in FIG. **16**A.

[0030] FIG. **17** is a side elevation view schematically showing an alternative embodiment of a sensor inserter.

[0031] FIG. **18**A is a side elevation view schematically showing an alternative embodiment of a sensor inserter.

[0032] FIG. **18**B is a top view schematically showing the sensor inserter of FIG. **18**A.

[0033] FIG. **19**A is a side elevation view schematically showing an alternative embodiment of a sensor inserter.

[0034] FIG. **19**B is a top view schematically showing the sensor inserter of FIG. **19**A.

[0035] FIG. **20**A is a side elevation view schematically showing an alternative embodiment of a sensor inserter.

[0036] FIG. **20**B is a top view schematically showing the sensor inserter of FIG. **20**A.

[0037] Variation of the invention from that shown in the figures is contemplated.

DETAILED DESCRIPTION

[0038] The following description focuses on several variations of the present invention. The variations of the invention are to be taken as non-limiting examples. It is to be understood that the invention is not limited to particular variation(s) set forth and may, of course, vary. Changes may be made to the invention described and equivalents may be substituted (both presently known and future-developed) without departing from the true spirit and scope of the invention. In addition, modifications may be made to adapt a particular situation, material, composition of matter, process, process act(s) or step(s) to the objective(s), spirit or scope of the present invention.

[0039] Referring to FIGS. **1-20**, exemplary embodiments of a sensor inserter constructed according to some aspects of the invention will be described. FIG. **1** shows an overall perspective view of a sensor inserter kit **300** comprising a single-use sensor inserter **310** and a single-use adhesive mount **312** removably attached to the bottom thereof.

[0040] As an overview of the operation of this embodiment of an inserter kit **300**, the kit may come packaged generally as shown in FIG. **1** with a sensor **314** (best seen in FIGS. **4** and **25**) preloaded within inserter **310** and with inserter **310** in a "cocked" state. After preparing an insertion site on the skin, typically in the abdominal region, the patient may remove an upper liner **316** and a lower liner **318** from adhesive mount **312** to expose the bottom surface and a portion of the top surface of an adhesive tape **320** (best seen in FIG. **4**) located beneath mount **312**. Mount **312**, with inserter **310** attached, may then be applied to the patient's skin at the insertion site. Safety lock tabs **322** may be squeezed together to allow actuator button **324** to be pressed causing inserter **310** to fire, thereby inserting sensor **314** into the patient's skin with a predetermined velocity and force. Once sensor **314** has been inserted into the skin, the patient may remove inserter **310** from mount **312** by pressing release tabs **326** on opposite sides of inserter **310** and lifting inserter **310** away from mount **312**

[0041] Referring to FIG. **2**, mount **312** is shown adhered to a patient's skin **328** with sensor **314** already inserted, according to this exemplary embodiment. Once inserter **310** is removed from mount **312**, transmitter **330** may be slid into place. The circuitry of transmitter **330** may then make electrical contact with the contact pads on sensor **314** after transmitter **330** is fully seated on mount **312**. Once initialization and synchronization procedures are completed, electrochemical measurements from sensor **314** may be sent wirelessly from transmitter **330** to a portable receiver **332**, as shown in FIG. **3**. Sensor **314**, mount **312** and transmitter **330** may remain in place on the patient for a predetermined period, such as three, five or seven days. These components may then be removed so that sensor **314** and mount **312** may be properly discarded. The entire procedure above may then be repeated with a new inserter **310**, sensor **314** and mount **312**, reusing transmitter **330** and receiver **332**.

[0042] Referring to FIG. **4**, inserter kit **300** may be assembled as shown from the following components: housing **334**, actuator button **324**, drive spring **336**, shuttle **338**, introducer sharp **340**, sensor **314**, retraction spring **342**, inserter base **344**, upper liner **316**, adhesive mount **312**, adhesive tape **320**, and lower liner **318**.

[0043] Sensor **314** may have a main surface **346** slidably mounted between U-shaped rails **348** of introducer sharp **340** and releasably retained there by sensor dimple **350** which engages introducer dimple **352**. Introducer sharp **340** may be mounted to face **354** of shuttle **338**, such as with adhesive, heat stake or ultrasonic weld. Sensor **314** may also have a surface **356** that extends orthogonally from main surface **346** and just beneath a driving surface **358** of shuttle **338** when mounted thereon (details of these features are better shown in FIGS. **7** and **13-15**.)

[0044] Shuttle **338** may be slidably and non-rotatably constrained on base **344** by arcuate guides **360**. As best seen in FIGS. **7**, **12** and **15**, shuttle **338** may be generally formed by an outer ring **362** and an inner cup-shaped post **364** connected by two bridges **366**. Bridges **366** slide between the two slots **368** formed between guides **360** and allow shuttle **338** to travel along guides **360** without rotating. Retraction spring **342** may be captivated at its outer circumference by guides **360**, at its bottom by the floor **370** of base **344**, at its top by bridges **366**, and/or at its inner circumference by the outer surface of shuttle post **364**. Drive spring **336** may be captivated at its bottom and outer circumference by the inside surface of shuttle post **364**, at its top by the ceiling **372** inside actuator button **324**, and/or at its inner circumference by stem **374** depending from ceiling **372**. When drive spring **336** is compressed between actuator button **324** and shuttle **338** it urges shuttle **338** towards base **344**. When retraction spring **342** is compressed between shuttle **338** and base **344**, it urges shuttle **338** towards actuator button **324**.

[0045] Actuator button **324** may be slidably received within housing **334** from below and reside in opening **376** at the top of housing **334** with limited longitudinal movement. Arms **378** on each side of actuator button **324** may travel in channels **380** along the inside walls of housing **334**, as best seen in FIG. **8**. Longitudinal movement of actuator button **324** may be limited in one direction by the base of arms **378** contacting the edge of opening **376** at the top of housing **334**, and in the other direction by the distal ends **384** of arms **378** contacting stops **386** in channels **380**. In this embodiment, slots **388** are provided in the top of housing **334** for ease of housing manufacture and so tools may be inserted to inwardly compress areas **378** beyond stops **386** to allow actuator button **324** to be removed from housing **334** if needed.

[0046] When sensor **314**, introducer **340**, shuttle **338**, retraction spring **342**, drive spring **336** and actuator button **324** are assembled between base **344** and housing **334** as shown in FIG. **4** and described above, housing **334** may be snapped into place on base **344**. Base **344** may be held onto housing **334** by upper base barbs **390** that engage upper openings **392** in housing **334**, and lower base barbs **394** (best seen in FIG. **5**) that engage lower openings **396** in housing **334**. In this embodiment, slots **398** and **400** are provided for ease of manufacture of housing **334**, and base **344** is removable from housing **334** with tools if needed.

[0047] Referring to FIG. **7**, actuator button **324** may be provided with safety lock tabs **322** hingedly formed on opposite ends. Tabs **322** may be urged from a relaxed outward position to a flexed inward position. When in the normal outward position, shoulders **402** on the outer surfaces of tabs **322** engage the rim **404** of opening **376** to prevent the actuator button **324** from being depressed, thereby avoiding accidental firing of inserter **310**. Tabs **322** maybe squeezed inward just enough to clear the rim **404** of opening **376** while pressing the actuator button **324** down to fire the inserter. Alternatively, tabs **322** may be squeezed further inward so that barbs **406** on the inside edges engage catches **408** located on a center portion of actuator button **324**, thereby defeating the safety lock to allow later firing by simply pressing down on the actuator button **324**. In this embodiment, upwardly extending grips **410** are provided on tabs **322** for better visual indication of safety lock status and actuation control.

[0048] Referring to FIG. **8**, shuttle **338** may be provided with laterally extending barbed fingers **412** which travel in channels **380** along the inside walls of housing **334**. When shuttle **338** is inserted up into housing **334** far enough in this embodiment, barbed fingers **412** momentarily deflect inward and then snap outward again to catch on stops **386**. In this "cocked" position as shown, drive spring **336** may be compressed and urging shuttle **338** towards base **344**, but barbed fingers **412** catching on stops **386** prevent such travel.

[0049] Referring to FIGS. **9-11**, the sequence of loading, cocking, arming, firing, and automatic retraction of exemplary inserter **310** will be described. According to aspects of the invention, during production inserters **310** may be fabricated and fully assembled by one vender, except for sensor **314**, which may be supplied and installed by a second vendor in a sterile environment. Accordingly, inserter **310** may be manufactured and shipped to the sensor vendor in a neutral state, as shown in FIG. **9**. A hole **414** provided through the center of actuator button **324** allows the sensor vendor to insert a pin (manually or by automated machinery, not shown) through hole **414** to drive shuttle **338** towards base **344** in a controlled fashion and hold it there against the force of retraction spring **342**. This will allow introducer sharp **340** to be extended through base **344** (as shown in FIG. **11**) so that sensor **314** may be loaded into introducer **340**. When the pin is removed, shuttle **338**, introducer **340** and sensor **314** may be allowed to retract to the neutral position. The sensor vendor may then cock the loaded inserter **310** before shipment by pushing another pin (not shown) from the opposite direction through a central hole **416** in base **344** (with mount **312** removed) until the pin contacts dimple **418** formed in the bottom of shuttle **338**. By pushing shuttle **338** towards actuator button **324** until barbed fingers **412** clear stops **386**, the inserter **310** may be cocked (as shown in FIG. **10**.)

[0050] Referring to FIG. **10**, inserter **310** may be received by the patient in the cocked position as shown. To use inserter **310**, the patient may apply mount **312** to the mounting site and may disable the safety mechanism as previously described, and may then push actuator button **324** against the force of drive spring **336**. As actuator button **324** travels toward base **344**, drive cam surfaces **420** on arms **378** contact ramped surfaces **422** of barbed fingers **412** and urge them inward. When fingers **412** are driven inward enough to clear stops **386**, shuttle **338** may be driven by drive spring **336** with a predetermined speed and force to an insertion position, as shown in FIG. **11**.

[0051] Referring to FIG. **11**, exemplary inserter **310** is shown in the insertion position with the tail **424** of introducer sharp **340** extending through base **344** and mount **312** into the skin of the patient. FIG. **11** shows shuttle **338** in a fully extended position with its lower surface **426** bottomed out on base **344**. However, in this embodiment, the lower

orthogonal surface **356** of sensor **314** will contact an exposed sensor contact portion **428** (best seen in FIGS. **2** and **4**) on top of adhesive tape **320** supported from below by the patient's skin, and therefore will typically stop traveling before reaching the fully bottomed out position shown. Tail **424** of introducer sharp **340** may provide rigidity and a skin piercing edge **430** for allowing the flexible tail **431** of sensor **314** to be implanted in the patient's skin. After providing this function, introducer sharp **340** may be immediately removed from the patient and retracted into a safe position inside housing **334** as retraction spring **342** (which has been compressed by the travel of the shuttle) pushes shuttle **338** back towards actuator cap. Sensor **314** may be pulled from introducer **340** and held in place by the sensor contact portion **428** on top of adhesive tape **320** adhering to orthogonal surface **356** of sensor **314**. The geometries of sensor dimple **350** and mating introducer dimple **352** may be chosen to create a separation force between them that is less than the adhesion force of tape **320** on orthogonal surface **356**, but great enough to retain sensor **314** in introducer **340** during typical shipping and product handling shock loads. Driving surface **358** beneath shuttle **338** may press down on top of orthogonal surface **356** to ensure good contact with adhesive tape **320** before shuttle **338** retracts within introducer **340**. Barb(s) on sensor tail **431** may be employed to further anchor the sensor in its operating position.

[0052] Referring again to FIG. **9**, in this embodiment retraction spring **342** will return shuttle **338** to the neutral position as shown after firing, but without sensor **314** which remains inserted in patient's skin (not still in introducer **340** as shown here.) Drive spring **336** may be designed to be stiffer than retraction spring **342** so that shuttle **338** oscillations are quickly dampened out, and so introducer sharp **340** does not return to sensor **314** or the patient to cause injury. With sensor **314** now inserted in the patient's skin, inserter **310** may be removed from mount **312** by inwardly flexing release tabs **326** on opposite sides of inserter **310** to remove latch hooks **432** from mount channels **434** and then lifting inserter **310** away from mount **312**. Introducer sharp **340** remains protected inside housing **334** during disposal of inserter **310**. Transmitter **330** may now be slid into place on mount **312** as previously described.

[0053] In one embodiment, sensor **314** may be made from a 0.005 inch thick Mylar substrate, such as Dupont Melinex ST-505, print treated both sides, heat stabilized and biaxially oriented. In this embodiment, main surface **346** is 0.315 tall by 0.512 wide, and orthogonal surface **356** is 0.374 wide by 0.202 deep. Sensor tail **431** is 0.230 long by 0.023 wide. Semispherical sensor dimple **350** is 0.050 inches wide and 0.026 inches deep. Introducer **340** is made from SUS 301 medical grade stainless steel, 0.004 inches thick, having a surface roughness less than or equal to 0.5 micrometers. The height of the main portion of introducer **340** is 0.614 inches, and the inside width is 0.513 inches. The overall thickness of rolled rails **348** is 0.026 inches. The length and width of introducer tail **424** are 0.354 and 0.036 inches, respectively. The preferred angle of the sharp **340** is 21 degrees. Semispherical introducer dimple **352** has a radius of 0.024 inches. Also, in this embodiment, shuttle **338** has an average speed of at least 1 meter/second, and has a momentum at its end of travel of about 2.65 lb-m/sec.

[0054] In the above exemplary embodiment, housing **334**, button **324**, shuttle **338**, base **344** and mount **312** are all injection molded from G.E. Lexan PC. Inside and outside working surfaces of arms **378** on button **324** are lubricated with Dow Corning 360 Medical Fluid. Drive spring **336** has a free length of 1.25 inches, a working length of 1.00 inch, and a rate between 20 and 30 pounds per inch. Retraction spring **342** has a free length of 1.5 inches, a working length of 0.35 inches, and a rate between 0.15 and 0.35 pounds per inch. Adhesive tape **320** is medical grade acrylic adhesive on polyester film (such as Acutek 0396013) with a semi-bleached kraft liner having silicon release.

[0055] The following enhancements may be added to the inserter kit **300** described above in an effort to increase the reliability of sensor insertion. First, a sensor flap **466**, as shown in FIG. **13**, may be formed along the top edge of sensor **314**. When sensor **314** reaches the extended, delivered position as shown in FIG. **11**, flap **466** catches on bottom edge **468** of base **344**, shown in FIG. **7**, to ensure that sensor **314** separates from introducer **340** as shuttle **338** returns upward to the retracted position. Adhesive may also be located on the bottom of orthogonal sensor surface **356** to ensure that sensor **314** adheres to the sensor contact portion **428** on the top of adhesive mount tape **320**, as shown in FIG. **4**.

[0056] Referring to FIGS. **16**A and **16**B, an alternative embodiment is shown. Actuator button **324'** may be made easier for elderly patients to push by anchoring the upper end of drive spring **336** on a housing bridge **470** instead of button **324**. This option may also make the insertion force of inserter **310** more consistent, and may allow stronger spring forces to be used if desired. Bridge **470** may span across opening **376'** and divide it into two openings **472** in the top of housing **334'**. The top portion of button **324'** may be bifurcated into two protrusions **474** that each extend through an opening **472**. A clearance hole (not shown) may be provided through the center of button **324'** to allow drive spring **336** to pass through and secure around a post (not shown) depending from the bottom center of bridge **470**.

[0057] Safety lock key **476** may be provided to prevent actuator button **324'** from being pressed until key **476** is removed. Aperture **478** may be provided in the top center of bridge **470** for receiving boss **480** located at the bottom of key **476**, thereby allowing key **476** to rotate. When key handle **482** is rotated perpendicular to button protrusions **474** in the embodiment shown in FIGS. **16**A and **16**B, two opposing perpendicular fins **484** on key **476** swing into inwardly facing slots (not shown) on the inside of protrusions **474** and prevent button **324'** from being actuated. When key handle **482** and fins **484** are rotated parallel to button protrusions **474** such that fins **484** disengage therefrom, key **476** may be removed and button **324'** may then be actuated. Other than these modifications, this alternative embodiment inserter kit **300'** functions the same as the embodiments previously described.

[0058] In another embodiment, less aggressive finger engagement with stops **386** may be employed to provide an easier and more consistent release of shuttle **338** by actuator button **324** or **324'**. Alternatively, the above designs may be modified to have a single, more centrally located shuttle release finger (not shown) instead of the two outboard fingers **412** shown.

[0059] Referring to FIGS. **17-20**, various alternative embodiments are shown comprising features which allow the sensor insertion velocity to be changed. Referring first to FIG. **17**, an inserter **500** embodiment having a micrometer style head or knob **502** is shown, similar in arrangement to

inserter embodiments described above. Knob **502** may be attached to a threaded rod **504**. Threaded rod **504** may be received through a threaded hole or insert in fixed housing cross member **506**. A distal end of threaded rod **504** may be rotatably or fixedly attached to compression member **508**. Compression member **508** may be movable with respect to carrier or shuttle **510** for compressing drive spring **512** therebetween.

[0060] Shuttle **510** may be provided with barbed fingers **514** for engaging stops **516** within housing **518** to releasably retain shuttle **510** in a cocked position, similar to the arrangements of embodiments described above. Inserter **500** may be provided with an actuator button (such as **324** shown in FIG. **1**) for releasing barbed fingers **514** from stops **516** as also previously described, allowing drive spring **512** to drive shuttle **510** downward with introducer sharp and/or sensor **520** to be inserted into the patient's skin. A return spring **522** may also be provided to retract shuttle **510** into housing **518** after sensor insertion.

[0061] The driving force, travel distance, velocity, acceleration and/or other characteristics of sensor insertion may be adjusted according to aspects of the present invention. In this embodiment, the user may turn knob **502** causing threaded rod **504** to rotate within the threaded hole or insert in housing cross member **506**. Turning knob **502** in one direction causes knob **502**, rod **504** and compression member **508** to move downward, thereby further compressing drive spring **512** against shuttle **510**. Turning knob **502** in the opposite direction reduces the compression of drive spring **512**. By turning knob **502** prior to firing inserter **500**, a user may increase or decrease the insertion speed and/or other characteristics of sensor insertion.

[0062] Knob **502**, rod **504** and/or housing **518** may be provided with numbers, lines, pointers or other indicia to aid a user in setting knob **502** in a desired location. In this particular embodiment, a user may adjust knob **502** prior to cocking inserter **500** to reduce the amount of force needed to turn knob **502**, since drive spring **512** may not be compressed or as compressed in an uncocked state. Alternatively, knob **502** may be turned after inserter **500** has been cocked. This scenario may provide the user with feedback during adjustment, as inserter **500** may be designed to allow the user to feel more resistance in turning knob **502** as drive spring **512** is further compressed. It should be noted that in this embodiment, a user is allowed to variably adjust an insertion characteristic such as insertion speed across a range of speeds by turning knob **502** through a range of positions. In one embodiment, inserter **500** is provided to a user with knob **502** set in a middle of a range so that the user may either increase or decrease the insertion speed, or leave it at its default setting.

[0063] In an alternative embodiment (not shown), which is a variation of the embodiment shown in FIG. **17**, knob **502** may be arranged so that it remains in a fixed location while being free to turn. In this embodiment, a threaded hole or insert may be provided within either knob **502** or compression plate **508**, and threaded rod **504** may be fixed attached to the other. This arrangement may operate in a similar fashion to the embodiment shown in FIG. **17** and allow fixed housing cross member **506** to be eliminated.

[0064] In another alternative embodiment (not shown), which is another variation of the embodiment shown in FIG. **17**, knob **502**, threaded rod **504** and compression member **508** may be replaced with a housing cap that rotably engages with the main housing, such as with a threaded coupling. The drive spring may be captured between the cap and shuttle **510**. As the cap is threaded into further engagement with the main housing, the drive spring is further compressed. Conversely, the cap may be backed away from the main housing to reduce the compression of the drive spring. As before, the compression setting of the drive spring may affect characteristics of sensor insertion, such as sensor delivery speed.

[0065] Referring now to FIGS. **18**A and **18**B, another alternative inserter **600** embodiment is shown. Inserter **600** may include a thumbwheel **602**. Thumbwheel **602** may protrude from housing **604** as shown to allow a user to easily turn it for adjusting a parameter(s) of sensor insertion. Thumbwheel **602** may drive threaded rod **606** directly, or indirectly by rotably engaging pinion **608**. Pinion **608** or compression member **610** may include a threaded hole or insert for receiving threaded rod **606**. With this arrangement, rotation of thumbwheel **602** causes threaded rod **606** to lower or raise compression plate **610**, thereby further compressing or decompressing drive spring **612**, respectively. Thumbwheel **602** and/or housing **604** may be provided with numbers, lines, pointers or other indicia to aid a user in setting thumbwheel **602** in a desired position. A window may be provided atop housing **604** to allow one or more indicia on thumbwheel **602** to be viewed. In all other respects, inserter **600** shown in FIGS. **18**A and **18**B may operate in a similar manner to that of inserter **500** shown in FIG. **17**.

[0066] Referring now to FIGS. **19**A and **19**B, another alternative inserter **700** embodiment is shown. Inserter **700** includes a shuttle **702** that may be rotated to affect compression of drive spring **704**. As seen in FIG. **19**A, barbed fingers **706** may engage with a first pair of stops **708** to hold shuttle **702** in a cocked position at a first height. As seen in FIG. **19**B, inserter **700** may be provided with a second pair of stops **710**. The second pair of stops **710** may be located within housing **712** at a second height which is lower than the first height. Inserter may be provided with provisions to allow shuttle **702** to be rotated 90 degrees so that barbed fingers **706** may engage with either the first pair of stops **708** or the second pair of stops **710** when shuttle **702** is cocked. In this embodiment, when barbed fingers **706** are engaged with the higher first pair of stops **708** as shown in FIGS. **19**A and **19**B, drive spring **704** is compressed more than when barbed fingers **706** are engaged with the lower second pair of stops **710**, which may result in a higher sensor velocity when inserter **700** is actuated. It should be noted that this embodiment may provide the user with individual, discrete adjustment settings as opposed to a continuously variable range of settings as may be provided with the previously described embodiments.

[0067] In alternative embodiments (not shown), more than two pairs of stops may be provided to provide additional positions of drive spring compression. Such arrangements may be used with square, round or other shapes of housings. In other embodiments, one pair of stops **708** may be provided on housing **712**, and multiple pairs of barbed fingers **706** may be located at different heights on shuttle **702** for alternating engagement with the pair of stops **708**. Alternatively or in conjunction with this embodiment, stop(s) **708** may be located on shuttle **702** while barbed finger(s) **706** may be located on housing **712**. Other variations of these

embodiments may occur to those skilled in the art without departing from the scope of the present invention.

[0068] Referring now to FIGS. **20**A and **20**B, another alternative inserter **800** embodiment is shown. Inserter **800** includes at least one magnet **802** which may affect the compression of drive spring **804**. Drive spring **804** may be located between shuttle **806** and a top portion **808** of housing **810**. Shuttle **806** may include a ferrous material and/or one or more magnets (not shown) for attracting shuttle **806** to magnet **802**. Magnet **802** may be located above shuttle **806** on pivot arm **812**, which may pivot about hinge **814**. In this embodiment, a magnetic attraction between magnet **802** and shuttle **806** compresses drive spring **804** and holds shuttle **806** in a cocked position. Pressing on firing tab **816** causes arm **812** to pivot about hinge **814** in the direction shown by Arrow A and raises magnet **802** away from shuttle **806**. The increased separation between magnet **802** and shuttle **806** decreases the magnetic attraction between the two until the force of compressed drive spring **804** exceeds the force of magnetic attraction. At this point, drive spring **804** is allowed to extend, firing sensor **818** into the user's skin.

[0069] The degree of magnetic attraction between shuttle **806** and magnet(s) **802** may be varied by the size, number, location and/or polarity of magnet(s) **802**. For example, a user may place additional magnets **802** on top of pivot arm **812** to further compress drive spring **804**. This in turn may provide a higher sensor insertion velocity. In alternative embodiments, magnet(s) may be used in conjunction with previously described embodiments to affect spring compression. In such embodiments, no magnet may be used for a low speed setting, and one or more magnets may be used for higher speed setting(s).

[0070] In other embodiments (not shown), separate cartridges may alternately be installed by a user, each cartridge having a different spring rate for providing different insertion characteristics. Alternatively, a wind-up type constant force spring may be utilized to vary the spring force. Such an arrangement may also use a ratchet and lock type mechanism to affect the winding. In yet other embodiments, internal dampeners or other features may be used to allow adjustment of the firing characteristics of the inserter. For example, air bladders, movable walls or contact areas can be employed to increase, decrease or remove friction, thereby allowing sensor shuttle speed to be varied.

[0071] In the embodiments described above, a force or forces to drive a sensor or other object into a body may come from a compression spring, an extension spring, a torsion spring, a pneumatic or hydraulic cylinder or bladder, a magnet, an electromagnet or other prime mover or device for storing potential energy know to those skilled in the art.

[0072] In the embodiments described above, the entire insertion device or portions thereof can be either disposable or reusable.

[0073] As for additional details pertinent to the present invention, materials and manufacturing techniques may be employed as within the level of those with skill in the relevant art. The same may hold true with respect to method-based aspects of the invention in terms of additional acts commonly or logically employed. Also, it is contemplated that any optional feature of the inventive variations described may be set forth and claimed independently, or in combination with any one or more of the features described herein. Likewise, reference to a singular item, includes the possibility that there are plural of the same items present. More specifically, as used herein and in the appended claims, the singular forms "a," "and," "said," and "the" include plural referents unless the context clearly dictates otherwise. It is further noted that the claims may be drafted to exclude any optional element. As such, this statement is intended to serve as antecedent basis for use of such exclusive terminology as "solely," "only" and the like in connection with the recitation of claim elements, or use of a "negative" limitation. Unless defined otherwise herein, all technical and scientific terms used herein have the same meaning as commonly understood by one of ordinary skill in the art to which this invention belongs. The breadth of the present invention is not to be limited by the subject specification, but rather only by the plain meaning of the claim terms employed.

What is claimed as the invention is:

1. A sensor insertion device comprising:

a shuttle movable between a first position and a second position, the shuttle configured to retain a transcutaneous sensor while in the first position and release the sensor while in the second position;

a means for providing a force to drive the shuttle from the first position to the second position; and

a means for varying the driving force while the shuttle is stationary.

2. The insertion device of claim **1**, wherein the means for varying the driving force may be operated by a user of the insertion device.

3. The insertion device of claim **1**, wherein the driving force may be varied over a continuous range of settings.

4. The insertion device of claim **1**, wherein the driving force may be alternately set to one of a plurality of discrete settings.

5. The insertion device of claim **1**, wherein the means for varying the driving force includes a knob configured to be twisted by a user of the insertion device.

6. The insertion device of claim **1**, wherein the means for varying the driving force includes a thumbwheel configured to be turned by a user of the insertion device.

7. The insertion device of claim **1**, wherein the means for varying the driving force includes a component configured to be set to one of a plurality of discrete, alternate orientations by a user of the insertion device.

8. The insertion device of claim **7**, wherein the component includes the shuttle.

9. The insertion device of claim **1**, wherein the means for varying the driving force includes a magnet.

10. The insertion device of claim **1**, wherein the means for varying the driving force includes a threaded rod.

11. The insertion device of claim **1**, wherein the means for providing a force includes a compression spring.

12. An improved sensor insertion device of the type which drives a sensor into a living body, the improvement comprising a mechanism configured to allow a sensor insertion velocity of the insertion device to be set to one of a plurality of settings.

13. The insertion device of claim **12**, wherein the mechanism is configured to allow a user of the insertion device to set the sensor insertion velocity.

14. The insertion device of claim **12**, wherein the plurality of settings includes a continuous range of settings.

15. The insertion device of claim **12**, wherein the plurality of settings includes discrete settings.

16. The insertion device of claim **12**, wherein the mechanism allows the amount of compression of a drive spring to be changed.

17. A method of inserting a sensor, the method including the steps of:

cocking an automatic sensor insertion device;

selecting an insertion speed setting from among a plurality of insertion speed settings on the insertion device;

placing the insertion device against the skin of a living body; and

firing a sensor into the skin using the selected insertion speed.

18. The method of claim **17**, wherein the selecting step is performed before the cocking step.

19. The method of claim **17**, wherein the plurality of settings includes a continuous range of settings.

20. The method of claim **17**, wherein the plurality of settings includes a finite number of discrete settings.

* * * * *