(12) INTERNATIONAL APPLICATION PUBLISHED UNDER THE PATENT COOPERATION TREATY (PCT)

(19) World Intellectual Property Organization
International Bureau

(43) International Publication Date
26 May 2005 (26.05.2005)

PCT

(10) International Publication Number
WO 2005/046780 A1

(51) International Patent Classification[7]: A61M 25/06, 5/158

(21) International Application Number: PCT/US2004/030317

(22) International Filing Date: 15 September 2004 (15.09.2004)

(25) Filing Language: English

(26) Publication Language: English

(30) Priority Data:
10/705,719 10 November 2003 (10.11.2003) US

(71) Applicant *(for all designated States except US)*: **SMITH MEDICAL MD, INC.** [US/US]; 1265 Grey Fox Road, St. Paul, MN 55112 (US).

(72) Inventors; and
(75) Inventors/Applicants *(for US only)*: **COTE, Steve** [US/US]; 1314 Carnelian St. N., Stillwater, MN 55082 (US). **MARRS, James** [US/US]; 1748 Chatham Avenue, Arden Hills, MN 55112 (US). **FAUST, Mark, Henry** [US/US]; 196 White Pine Road, Lino Lakes, MN 55014 (US).

(74) Agent: **BRUESS, Steven, C.**; Merchant & Gould P.C., P.O. Box 2903, Minneapolis, MN 55402-0903 (US).

(81) Designated States *(unless otherwise indicated, for every kind of national protection available)*: AE, AG, AL, AM, AT, AU, AZ, BA, BB, BG, BR, BW, BY, BZ, CA, CH, CN, CO, CR, CU, CZ, DE, DK, DM, DZ, EC, EE, EG, ES, FI, GB, GD, GE, GH, GM, HR, HU, ID, IL, IN, IS, JP, KE, KG, KP, KR, KZ, LC, LK, LR, LS, LT, LU, LV, MA, MD, MG, MK, MN, MW, MX, MZ, NA, NI, NO, NZ, OM, PG, PH, PL, PT, RO, RU, SC, SD, SE, SG, SK, SL, SY, TJ, TM, TN, TR, TT, TZ, UA, UG, US, UZ, VC, VN, YU, ZA, ZM, ZW.

[Continued on next page]

(54) Title: DEVICE FOR INSERTION OF A CANNULA OF AN INFUSION DEVICE

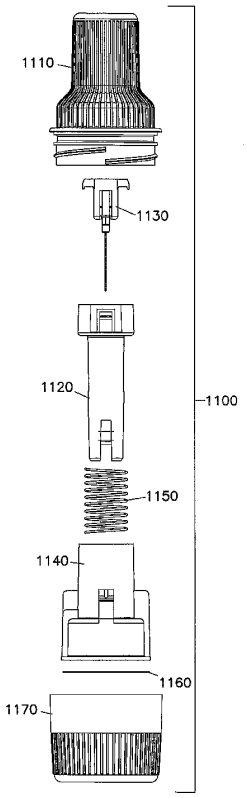

(57) Abstract: An infusion device including a site and a set for delivery of a substance to a patient. The site can include a cannula that is introduced into a subcutaneous layer of skin of the patient. The set can be coupled to the site by placing the set over the site and moving the set from an unlocked to a locked position. The set can be oriented at multiple rotational orientations with respect to the site, and can be coupled and uncoupled with the site multiple times. Also included is a device for inserting a subcutaneous infusion device into a subcutaneous layer of skin of a patient. Some devices automatically retract a needle used to introduce the cannula. Upon full introduction of the needle and associated cannula of the subcutaneous infusion device into a subcutaneous layer of skin of a patient, the device can move the needle into a retracted state.

WO 2005/046780 A1

(84) Designated States *(unless otherwise indicated, for every kind of regional protection available)*: ARIPO (BW, GH, GM, KE, LS, MW, MZ, NA, SD, SL, SZ, TZ, UG, ZM, ZW), Eurasian (AM, AZ, BY, KG, KZ, MD, RU, TJ, TM), European (AT, BE, BG, CH, CY, CZ, DE, DK, EE, ES, FI, FR, GB, GR, HU, IE, IT, LU, MC, NL, PL, PT, RO, SE, SI, SK, TR), OAPI (BF, BJ, CF, CG, CI, CM, GA, GN, GQ, GW, ML, MR, NE, SN, TD, TG).

Published:
— *with international search report*

For two-letter codes and other abbreviations, refer to the "Guidance Notes on Codes and Abbreviations" appearing at the beginning of each regular issue of the PCT Gazette.

DEVICE FOR INSERTION OF A CANNULA OF AN INFUSION DEVICE

Technical Field

The present invention relates to an infusion device for delivery of a substance to a patient. The present invention also relates to a device for assisting in the introduction of a cannula of an infusion device into the skin of a patient.

Background

Infusion devices are used to deliver substances such as medications into the subcutaneous layer of skin of a patient. Typically, an infusion device includes a cannula that is introduced into the skin, as well as a tube extending from the infusion device to, for example, an infusion pump to deliver the substance.

In current designs, it is typically necessary to introduce a cannula of the infusion device into the skin while maintaining the device at a given orientation so that the tubing extends in a direction towards the infusion pump. Further, once the infusion device is placed on the skin, there is typically no way to reorient the device and associated tubing, or to remove the tubing from the body without removing the cannula from the skin of the patient. In addition, the profile of infusion devices can be undesirably high, making placement and concealment of the infusion device difficult and uncomfortable to wear. Also, introduction of the infusion device into the skin can be complicated and require two hands to accomplish.

In addition, devices for assisting in insertion of the cannula of an infusion device into the skin of the patient are known. For example, some devices utilize springs to automatically drive a needle into the skin of a patient to introduce the cannula of the infusion device into the subcutaneous layer.

Because a needle is used to introduce the cannula of the infusion device into the subcutaneous layer of skin, there is a risk associated with inadvertent exposure to the needle. Further, patients may react adversely to viewing the needle prior to insertion and may, for example, be reluctant to place the needle into the skin. Prior devices may not adequately shroud this needle prior to and/or after introduction of the infusion device.

ABBOTT Exhibit 2001
Page 3 of 77
Dexcom, Inc. v. Abbott Diabetes Care Inc.
IPR2023-01409

Other issues of concern in the design and use of insertion devices include ease of use by the patient and sterilization. For example, some patients may have difficulty loading the infusion device into the insertion device.

It is therefore desirable to provide new designs for infusion devices and devices used to assist in the introduction of an infusion device into the skin of a patient to deliver a substance into the skin.

Summary

Embodiments made in accordance with the present invention are related to infusion devices for delivery of a substance to a patient. Embodiments made in accordance with the present invention also include devices that can be used to assist in the introduction of the cannula of an infusion device into the skin of a patient for delivery of a substance to the patient.

In one embodiment, an infusion device can include a site and a set. The site can include a cannula that is introduced into a subcutaneous layer of skin of the patient. The set can be coupled to the site by, for example, placing the set over the site and moving the set from an unlocked to a locked position. A substance can then be delivered through the set to the site and from the site into the patient through the cannula.

The set can preferably be oriented at multiple rotational orientations with respect to the site, and can preferably be coupled and uncoupled with the site multiple times.

In another embodiment, a device includes a needle used to insert the cannula of an infusion device into the skin of a patient. Once the cannula of the infusion device is inserted into the skin, the device moves the needle to a retracted state within the device.

In another embodiment, a device is configured to move a needle and associated cannula of an infusion device from a delivery state to a trigger state at which the cannula of the infusion device is inserted into the skin of a patient. Upon full insertion of the cannula at the trigger state, the device is then configured to move the needle to a retracted state within the device.

In another embodiment, a device includes a needle that can be used to insert a cannula of a site into the skin of a patient. Upon insertion of the cannula, the

ABBOTT Exhibit 2001
Page 4 of 77
Dexcom, Inc. v. Abbott Diabetes Care Inc.
IPR2023-01409

needle can be removed from the skin. In one embodiment, a cap is provided that can be placed onto the device prior to and after use of the device to provide a sterile environment and/or to reduce exposure to the needle.

In other embodiments, a subcutaneous infusion device and device for introduction of a cannula of the infusion device can be combined to introduce the cannula into the skin and deliver a substance into the skin.

The above summary of the present invention is not intended to describe each disclosed embodiment or every implementation of the present invention. Figures in the detailed description that follow more particularly exemplify embodiments of the invention. While certain embodiments will be illustrated and described, the invention is not limited to use in such embodiments.

Description of the Drawings

Figure 1 is a top perspective view of an example embodiment of a site made in accordance with the present invention.

Figure 2 is a bottom perspective view of the site of Figure 1.

Figure 3 is a side view of the site of Figure 1.

Figure 4 is a top view of the site of Figure 1.

Figure 5 is a bottom view of the site of Figure 1.

Figure 6 is a cross-sectional view taken along line 6-6 of the site of Figure 3.

Figure 6A is a cross-sectional view taken along line 6-6 of the site of Figure 3 including a needle used to insert the site.

Figure 7 is an exploded view of the site of Figure 1.

Figure 8 is a top perspective view of a base of the site of Figure 1.

Figure 9 is a bottom perspective view of the base of Figure 8.

Figure 10 is a side view of the base of Figure 8.

Figure 11 is a top view of the base of Figure 8.

Figure 12 is a side view of a cannula of the site of Figure 1.

Figure 13 is an end view of the cannula of Figure 13.

Figure 14 is cross-sectional view taken along line 14-14 of the cannula of Figure 12.

Figure 15 is a side view of a diaphragm of the site of Figure 1.

ABBOTT Exhibit 2001
Page 5 of 77
Dexcom, Inc. v. Abbott Diabetes Care Inc.
IPR2023-01409

Figure 16 is an end view of the diaphragm of Figure 15.

Figure 17 is a cross-sectional view taken along line 17-17 of the diaphragm of Figure 16.

Figure 18 is a top view of an adhesive portion of the site of Figure 1.

Figure 19 is a cross-sectional view taken along line 19-19 of the adhesive portion of Figure 18.

Figure 20 is an exploded view of the adhesive portion of Figure 18.

Figure 21 is a top perspective view of an example embodiment of a set in an unlocked position made in accordance with the present invention.

Figure 22 is a top perspective view of a first member of the set of Figure 21.

Figure 23 is a top view of the first member of Figure 22.

Figure 24 is a side view of the first member of Figure 22.

Figure 25 is an end view of the first member of Figure 22.

Figure 26 is another end view of the first member of Figure 22.

Figure 27 is a top perspective view of a second member of the set of Figure 21.

Figure 28 is a top view of the second member of Figure 27.

Figure 29 is a side view of the second member of Figure 27.

Figure 30 is an end view of the second member of Figure 27.

Figure 31 is another end view of the second member of Figure 27.

Figure 32 is a top view of the set of Figure 21 in an unlocked position.

Figure 33 is a side view of the set of Figure 32.

Figure 34 is an end view of the set of Figure 32.

Figure 35 is a cross-sectional view taken along line 35-35 of the set of Figure 32 with portions of the set removed for clarity.

Figure 36 is a top perspective view of the set of Figure 21 in a locked position.

Figure 37 is a top view of the set of Figure 36.

Figure 38 is a side view of the set of Figure 36.

Figure 39 is an end view of the set of Figure 36.

Figure 40 is a bottom perspective view of the set of Figure 36.

ABBOTT Exhibit 2001
Page 6 of 77
Dexcom, Inc. v. Abbott Diabetes Care Inc.
IPR2023-01409

Figure 41 is a bottom view of the set of Figure 36.

Figure 42 is a cross-sectional view taken along line 42-42 of the set of Figure 38 with portions of the set removed for clarity.

Figure 43 is a perspective view of the site of Figure 1 and the set of Figure 21 coupled to one another.

Figure 44 is a top view of the site and set of Figure 43.

Figure 45 is a bottom view of the site and set of Figure 43.

Figure 46 is a side view of the site and set of Figure 43.

Figure 47 is an end view of the site and set of Figure 43.

Figure 48 is another end view of the site and set of Figure 43.

Figure 49 is an exploded perspective view of the site and set of Figure 43.

Figure 50 is a cross-sectional view taken along line 50-50 of the site and set of Figure 44.

Figure 51 is an exploded perspective view of another example embodiment of an infusion device including a site and set made in accordance with the present invention.

Figure 52 is a perspective view of the infusion device of Figure 51 in a locked position.

Figure 53 is a cross-sectional view of the site of Figure 51.

Figure 54 is a side view of an example embodiment of a device used to introduce a cannula of an infusion device into a patient made in accordance with the present invention.

Figure 55 is an exploded side view of the device of Figure 54.

Figure 56 is a perspective view of a housing of the device of Figure 54.

Figure 57 is a side view of the housing of Figure 56.

Figure 58 is an end view of the housing of Figure 56.

Figure 59 is a perspective view of a cylinder hub of the device of Figure 54.

Figure 60 is side view of the cylinder hub of Figure 59.

Figure 61 is another side view of the cylinder hub of Figure 59.

ABBOTT Exhibit 2001
Page 7 of 77
Dexcom, Inc. v. Abbott Diabetes Care Inc.
IPR2023-01409

Figure 62 is an end view of the cylinder hub of Figure 59.

Figure 63 is a perspective view of a needle hub of the device of Figure 54.

Figure 64 is a side view of the needle hub of Figure 63.

Figure 65 is another side view of the needle hub of Figure 63.

Figure 66 is an end view of the needle hub of Figure 63.

Figure 67 is a perspective view of a sleeve of the device of Figure 54.

Figure 68 is a side view of the sleeve of Figure 67.

Figure 69 is another side view of the sleeve of Figure 67.

Figure 70 is an end view of the sleeve of Figure 67.

Figure 71 is a top view of an adhesive portion of the device of Figure 54.

Figure 72 is a cross-sectional view taken along line 72-72 of the adhesive portion of Figure 71.

Figure 73 is an exploded view of the adhesive portion of Figure 71.

Figure 74 is a perspective view of a cap of the device of Figure 54.

Figure 75 is a side view of the cap of Figure 74.

Figure 76 is an end view of the cap of Figure 74.

Figure 77 is a side view of the device of Figure 54 with the cap removed.

Figure 78 is a side view of the device of Figure 77 in a trigger state.

Figure 79A is a cross-sectional view taken along line 79A-79A of the device of Figure 54 in a ship state.

Figure 79B is a cross-sectional view taken along line 79B-79B of the device of Figure 54 in the ship state.

Figure 80A is a cross-sectional view taken along line 80A-80A of the device of Figure 77 in a delivery state.

Figure 80B is a cross-sectional view taken along line 80B-80B of the device of Figure 77 in the delivery state.

Figure 81A is a cross-sectional view taken along line 81A-81A of the device of Figure 78 in a trigger state.

Figure 81B is a cross-sectional view taken along line 81B-81B of the device of Figure 78 in the trigger state.

ABBOTT Exhibit 2001
Page 8 of 77
Dexcom, Inc. v. Abbott Diabetes Care Inc.
IPR2023-01409

Figure 81C is a cross-sectional view of the device of Figure 81B illustrating the adhesive portion being sheared from a surface of the sleeve.

Figure 82A is a cross-sectional view of the device of Figure 81A with the needle hub retracted.

Figure 82B is a cross-sectional view of the device of Figure 81B with the needle hub retracted.

Figure 83A is a cross-sectional view taken along line 83A-83A of the device of Figure 77 in a retracted state.

Figure 83B is a cross-sectional view taken along line 83B-83B of the device of Figure 77 in the retracted state.

Figure 84 is a cross-sectional view of a portion of another example embodiment of a device used to introduce an infusion device into a patient made in accordance with the present invention.

Figure 85A is a cross-sectional view of another example embodiment of a device used to introduce an infusion device into a patient in a ship state made in accordance with the present invention.

Figure 85B is a cross-sectional view along a perpendicular plane of the device of Figure 85A.

Figure 86A is a cross-sectional view of the device of Figure 85A in a delivery state.

Figure 86B is a cross-sectional view of the device of Figure 85B in the delivery state.

Figure 87A is a cross-sectional view of the device of Figure 85A in a retracted state.

Figure 87B is a cross-sectional view of the device of Figure 85B in the retracted state.

Figure 88 is a perspective view of a sleeve of the device of Figure 85A.

Figure 89 is a side view of the sleeve of Figure 88.

Figure 90 is another side view of the sleeve of Figure 88.

Figure 91 is an end view of the sleeve of Figure 88.

ABBOTT Exhibit 2001
Page 9 of 77
Dexcom, Inc. v. Abbott Diabetes Care Inc.
IPR2023-01409

Figure 92 is a perspective view of another example embodiment of a device used to introduce an infusion device into a patient made in accordance with the present invention.

Figure 93 is another perspective view of the device of Figure 92.

Figure 94 is a side view of the device of Figure 92.

Figure 95 is an end view of the device of Figure 92.

Figure 96 is an opposite end view of the device of Figure 92.

Figure 97 is a perspective view of another example embodiment of a device used to introduce an infusion device into a patient made in accordance with the present invention.

Figure 98 is a side view of the device of Figure 97.

Figure 99 is another side view of the device of Figure 97.

Figure 100 is an end view of the device of Figure 97.

Figure 101 is another end view of the device of Figure 97.

Figure 102 is a cross-sectional view taken along line 102-102 of the device of Figure 98.

Figure 103 is a side view of another example embodiment of a device used to introduce a cannula of an infusion device into a patient including a tamper-evident seal made in accordance with the present invention.

Figure 104 is a side view of the device of Figure 103 with the cap uncoupled and the tamper-evident seal having been broken.

Figure 105 is a cross-sectional view taken along line 105-105 of a portion of the device of Figure 103.

Detailed Description

Embodiments of the present invention relate to infusion devices for delivering a substance into the subcutaneous layer of skin of a patient. Embodiments of the present invention also relate to devices for assisting in the introduction of an infusion device, specifically a cannula of the infusion device, into the subcutaneous layer of skin of a patient.

Generally, the example infusion devices disclosed herein include a site with a cannula that is introduced into the subcutaneous layer of the skin of a

ABBOTT Exhibit 2001
Page 10 of 77
Dexcom, Inc. v. Abbott Diabetes Care Inc.
IPR2023-01409

patient to deliver a substance, as well as a set that can be coupled to the site to deliver the substance to the site.

Referring now to Figures 1-7, an example embodiment of a site 100 of an infusion device is depicted in accordance with the present invention. Generally, the site 100 can be used in conjunction with a set (described below) to deliver a substance into a patient.

The site 100 includes a base 110, a cannula 130, a diaphragm 150, and an adhesive portion 170. The cannula 130 of the site 100 can be introduced into the subcutaneous layer of skin of the patient using a needle (e.g., needle 139), as shown in Figure 6A. The adhesive portion 170 allows the base 110 of the site 100 to be coupled to the skin of the patient. The diaphragm 150 is in fluid communication with the cannula to deliver a substance from the diaphragm 150, through the cannula 130, and into the skin of the patient, as described further below.

Referring now to Figures 8-11, the base 110 is shown. The base includes a stand 114 with a top side 111 and a bottom side 112, and forms a central aperture 113 located at a central axis C of the base 110. The stand 114 further forms eight positional slots 115 on the top side 111 positioned radially with respect to the central axis C of the site 110 at regular intervals.

The base 110 also includes a member 120 coupled to the stand 114, the member 120 being positioned about the central aperture 113 of the stand 114 and including eight surfaces 124. In one preferred embodiment, the member 120 is non-cylindrical in shape. For example, in the embodiment shown the member 120 is octagonal in shape, although other shapes can also be used, as noted below. The non-cylindrical shape of member 120 defines different mounting orientations for a set that can be coupled to the site 100.

An interior wall of the member 120 forms a cylindrical cavity 121, and an exterior periphery of the member 120 forms a groove 122 extending about the exterior periphery. In addition, the member 120 forms eight apertures 123 extending from the interior cavity 121 to the groove 122 in the exterior of the member 120.

Referring now to Figures 12-14, the cannula 130 is illustrated. The cannula 130 includes first and second ends 132 and 134. The first end 132 of the cannula 130 includes a flange portion 136 having a tapered bottom side 140, as well

ABBOTT Exhibit 2001
Page 11 of 77
Dexcom, Inc. v. Abbott Diabetes Care Inc.
IPR2023-01409

as a tapered portion 138 described further below. The cannula 130 also includes a central bore 142 extending from the first end 132 to the second end 134 to allow a substance to be introduced at the first end 132 and delivered out of the second end 134.

The cannula 130 is positioned within the cavity 121 of the base 110 so that the bottom taper 140 of the cannula 130 engages tapered bottom surfaces 125 of the cavity 121 of the member 120, and the second end 134 of the cannula 130 extends through the central aperture 113 of the stand 114 at an approximate right angle to the bottom side 112 of the stand 114. See Figure 6. Preferably, the bottom taper 140 of the cannula 130 is positioned adjacent to the stand 114 of the base 110.

Preferably the cannula 130 is made of fluorinated ethylene propylene (FEP). Other materials can also be used, such as polytetrafluoroethylene (PTFE), or other suitable plastics.

Referring now to Figures 15-17, the diaphragm 150 is shown. Generally, the diaphragm 150 functions as a septum or seal that allows a needle to access an internal portion of the septum to deliver a substance provided, for example, from an infusion device or other similar device to the cannula 130.

Preferably, the diaphragm 150 is generally cylindrical in shape and includes an open bottom end 152 and a closed top end 154. The diaphragm 150 also includes a tapered portion 156 adjacent the bottom end 152, and a central reservoir 158.

As shown, for example, in Figures 6 and 17, the diaphragm 150 is positioned in the cavity 121 of the member 120 and preferably includes an outer periphery 160 that is sized to frictionally engage the interior cavity wall of the member 120 to retain the diaphragm 150 in the cavity 121. In addition, the tapered portion 156 of the diaphragm 150 is configured to engage the tapered bottom surfaces 125 of the base 110. The bottom end 152 engages the first end 132 of the cannula 130 to provide fluid communication between the reservoir 158 and the bore 142 of the cannula 130.

More specifically, surfaces 157 adjacent to the bottom end 152 of diaphragm 150 preferably are compressed against the first end 132 of the cannula 130 to provide a seal with respect to the cannula 130 so a substance can be delivered from the diaphragm 150, through the cannula 130, and into the patient. In

ABBOTT Exhibit 2001
Page 12 of 77
Dexcom, Inc. v. Abbott Diabetes Care Inc.
IPR2023-01409

alternative embodiments, additional structure such as, for example, an O-ring can also be provided between the diaphragm 150 and cannula 130 to provide additional sealing.

In a preferred embodiment, the diaphragm 150 is made of a silicone elastomer. Other materials can also be used, such as ethylene propylene or other suitable elastomeric materials.

As previously noted, preferably the diaphragm 150 is retained in the cavity 121 of the member 120 of the base 110 through the frictional engagement of the outer periphery 160 of the diaphragm 150 with the walls of the cavity 121. In alternative embodiments, a retaining member can be fitted over the open top of the member 120 to further retain the diaphragm 150 in position in the cavity 121. In other embodiments, the diaphragm 150 can be retained in the cavity 121 through compression by other features of the member 120, or the diaphragm 150 can have features that mate with features of the member 120. For example, in one alternative embodiment, the diaphragm 150 can be formed with barbs on the outer periphery 160 positioned and sized to be received within apertures 123 formed in the member 120 to retain the diaphragm 150 in the cavity 120. Other configurations are also possible.

Referring now to Figures 18-20, the adhesive portion 170 is shown. The adhesive portion includes liners 172 and 176 sandwiching a layer 174. Preferably, the layer 174 includes an aperture 178 through which the cannula 130 of the site 100 extends, as described below.

The liner 172 can be removed and the layer 174 coupled to the bottom side 112 of the stand 114 of the base 110 using an adhesive. Examples of such adhesives include, without limitation, acrylic adhesive, synthetic rubber-based adhesive, acrylate adhesive, and silicone-based adhesive. In addition, the liner 176 can be removed and an adhesive be provided on a bottom side of the layer 174 to couple the adhesive portion 170 and associated site 100 to another adhesive portion or the skin of the patient, for example.

In a preferred embodiment, layer 174 of the adhesive portion 170 includes films with adhesives thereon, such as and without limitation, 3M™ 1577 tape. Other materials can also be used.

ABBOTT Exhibit 2001
Page 13 of 77
Dexcom, Inc. v. Abbott Diabetes Care Inc.
IPR2023-01409

In other alternative embodiments, the adhesive portion 170 can be removed completely, and adhesion between the site 100 and skin of the patient can be provided using film and/or adhesive carried on other structures, such as a device used to insert the site 100 into the body, as described further below. Or, the layer 174 can be replaced or supplemented by one or more layers of other material such as, for example, a Tegaderm™ film manufactured by 3M™ or an IV3000™ film manufactured by Smith & Nephew.

In an alternative embodiment, layer 174 can be provided with a tab (not shown, but preferably similar to tabs shown on liners 172 and 176) or other similar structure that can assist the patient in removing the layer 174 and associated site 100 from the skin when desired. For example, the tab can extend from an outer periphery of the layer 174 and allow the patient to grasp the tab and thereby peel the layer 174 from the skin to remove the site 100.

In another alternative embodiment, the layer 174 can include a foam backing or similar additional material can be added adjacent to the layer 174 to provide supplemental cushioning as the site 100 is inserted into the skin of the patient.

Referring now to Figure 21, an example embodiment of a set 200 of an infusion device is depicted in accordance with the present invention. As noted generally above and described further below, the set 200 can be used in conjunction with a site (e.g., site 100) to deliver a substance into a patient.

The set 200 generally includes a first member 210 and a second member 250. The first member 210 is slideable relative to the second member 250 into an unlocked position (see, e.g., Figures 21 and 32-35) and a locked position (see, e.g., Figures 36-42), described further below.

Referring now to Figures 22-26, the first member 210 is shown. The first member 210 includes a main body 212, and a port 213 extending through the body 212 and in fluid communication with a hollow needle 214. The port 213 is preferably coupled to a tube (e.g., tube 305 shown in Figure 21) that can be attached, for example, to an infusion pump for the delivery of a substance to the set 200.

The first member 210 also includes outer arms 220 and 222 with barbs 223 formed on the ends and projections 230 extending below the arms 220. In addition, the first member 210 includes inner arms 226 and 228 with barbs 229. As

ABBOTT Exhibit 2001
Page 14 of 77
Dexcom, Inc. v. Abbott Diabetes Care Inc.
IPR2023-01409

described further below, the outer arms 220 and 222 can be displaced towards one another when force is applied to surfaces 221.

Referring now to Figures 27-31, the second member 250 is shown. The second member 250 includes a main body 260, and a central octagonal aperture 270. The second member 250 also includes opening 262 extending to the central aperture 270, as well as openings 264 positioned on opposite sides of the main body 260. The second member 250 also includes projections 266 formed on a bottom surface 274 of a base 261, as well as slots 268 preferably extending through the base 261 of the main body 260.

Referring now to Figures 21 and 32-35, the first and second members 210 and 250 of the set 200 are shown in the unlocked position. The first member 210 is slidingly received by the second member 250 such that inner arms 226 and 228 are accepted into opening 262 of the second member 250. Projections 230 on outer arms 220 and 222 of the first member 210 are received in slots 268 of the second member 250.

As illustrated by Figure 35, in the unlocked position barbs 229 of inner arms 226 and 228 of the first member 210 extend through openings 264 and engage shoulders 271 of the second member 250 such that the first and second members 210 and 250 cannot be further separated.

Referring now to Figures 36-42, the first and second members 210 and 250 of the set 200 are shown in the locked position. To move the set 200 from the unlocked to the locked position, the first and second members 210 and 250 are slid towards one another, and outer arms 220 and 222 of the first member 210 are accepted into the openings 264 of the second member 250. Likewise, projections 230 on outer arms 220 and 222 slide along slots 268 of the second member 250. Further, surfaces 234 of the inner arms 226 and 228 partially extend into aperture 270, as described further below.

As illustrated by Figure 42, in the locked position outer arms 220 and 222 extend through openings 264 and engage lips 272 of the second member 250. In addition, inner arms 226 and 228 of the first member 210 extend further into the second member 250. In this locked position, the engagement of the barbs 223 with the lips 272 resist allowing the first member 210 from being slid relative to the second member 250.

ABBOTT Exhibit 2001
Page 15 of 77
Dexcom, Inc. v. Abbott Diabetes Care Inc.
IPR2023-01409

In order to slide the first member 210 away from the second member 250 from the locked position back to the unlocked position, the outer arms 220 and 222 are deflected inwardly toward one another by applying pressure on surfaces 221 until the barbs 223 clear the lips 272, thereby allowing the first member 210 to be slid with respect to the second member 250 back into the unlocked position as shown in Figures 21 and 32-35.

Preferably, slots 268 formed in the second member 250 include a cammed surface 269 so that projections 230 extending below the arms 220 of the first member 210 are biased towards a first end 267 of the slots 268 to thereby bias the first member 210 into the unlocked position. See Figures 40 and 41. In alternative embodiments, other features can be provided to bias the first member 210 into the unlocked position. For example, detents can be provided to engage barbs 229 as inner arms 226 and 228 of the first member 210 are moved towards the locked position to bias the first member 210 into the unlocked position. It can be preferable to bias the set 200 into the unlocked position so that the set 200 can be easily positioned onto and removed from the site 100, as described further below.

Referring now to Figures 43-50, as previously noted the site 100 and set 200 can be used together to form an infusion device 300 for delivery of a substance to a patient.

One method of use of the infusion device 300 is as follows. Initially, the site 100 is positioned on the skin of a patient with the cannula 130 being introduced into the subcutaneous layer of the skin. This can be accomplished, for example, using a needle (e.g., needle 130 shown in Figure 6A) that is extended through the exposed closed end 154 of the diaphragm 150 and through the bore 142 of the cannula 130 and beyond the second end 134. The tapered portion 138 of the flange portion 136 of the cannula 130 can assist in directing the needle through into the bore 142 of the cannula 130. In this position, the needle can be used to introduce the cannula 130 of the site 100 into the skin of the patient. Further, once the cannula 130 is in position, the needle can be removed, leaving the cannula 130 in place in the subcutaneous layer of the skin. As the needle is removed, the closed end 154 of the diaphragm 150 reseals itself to retain the fluid-tight reservoir 158.

ABBOTT Exhibit 2001
Page 16 of 77
Dexcom, Inc. v. Abbott Diabetes Care Inc.
IPR2023-01409

In a preferred embodiment, the site 100 of the infusion device 300 is placed in position on the skin of a patient using one or more of the devices or methods described below with reference to Figures 54-105.

Once the site 100 has been positioned on the skin of a patient (with the cannula 130 having been introduced into the subcutaneous layer), the set 200 can be coupled to the site 100 as follows. With the set 200 in the unlocked position, the set 200 can be placed over the member 120 so that the central octagonal aperture 270 of the set 200 accepts the member 120 into the aperture 270. The set 200 is lowered onto the site 100 until the bottom surface 274 of the set 200 contacts the stand 114 of the site 100 and projections 266 of the second member 250 are accepted into the positional slots 115 of the stand 114 of the base 110.

In this position on the site 100, the first member 210 of the set 200 can be slid from the unlocked to the locked position. As the first member 210 is slid to the locked position, surfaces 234 of the inner arms 226 and 228 (see Figures 23, 36, and 37) are accepted by the groove 112 of the member 120 of the base 100, which locks the set 200 to the site 100 so that the set 200 resists any upward force tending to remove the set 200 from the site 100 when the set 200 is in the locked position. In addition, the shape of the member 120 of the site 100 and the central aperture 270 of the set 200, as well as projections 266 received in slots 115, orient the set 200 with respect to the site 100 and function to resist rotation of the set 200 with respect to the site 100 when the set 200 is in the locked position.

In addition, as the first member 210 of the set 200 is moved from the unlocked to the locked position, the needle 214 is advanced through one of the eight apertures 123 formed in the member 120 and into the diaphragm 150 in the cavity 121. In the fully locked position as shown in Figure 50, an end 215 of the needle 214 is positioned within the reservoir 158 of the diaphragm 150. In this position, the port 213 is fluidly coupled to the cavity 121 of the diaphragm 150 through the hollow needle 214, and the cavity 121 is in turn fluidly coupled to the skin of the patient through the bore 142 in the cannula 130. In this manner, a substance can be delivered to the port 213 of the set 200 (by, for example, a tube not shown in the figures), through the needle 214, into the reservoir 158, and into the subcutaneous layer of the skin of the patient by the cannula 130.

ABBOTT Exhibit 2001
Page 17 of 77
Dexcom, Inc. v. Abbott Diabetes Care Inc.
IPR2023-01409

If the set 200 is not oriented as desired with respect to the site 100, or if the patient desires to remove the set 200 from the site 100, the set 200 can be moved from the locked to the unlocked position by forcing the outer arms 220 and 222 together and sliding the first member 210 away from the second member 250 to the unlocked position. This action removes the surfaces 234 from the groove 122, as well as the needle 214 from the reservoir 158. The diaphragm 150 reseals upon removal of the needle 214. The set 200 can then be removed from the site 100, leaving the site 100 in place on the skin of the patient. The set 200 can be replaced at another orientation or at a later time.

In the illustrated embodiment of the infusion device 300, the set 200 can be oriented and fixed in eight different positions with respect to the site 100. In alternative embodiments, the site 100 and set 200 can be configured to include fewer or more positions as desired. For example, in an alternative embodiment the member 120 of the site 100 and the aperture 270 of the set 200 can be formed in the shape of a square if four orientational positions are desired.

Referring now to Figures 51-53, another example infusion device 400 is shown in accordance with the present invention. The device 400 is similar to the example device 300 described above, except for the details noted below.

The infusion device 400 includes a site 405 with a central portion 407. The central portion 407 includes a pierceable outer shell 430 made of a material such as a plastic, and a softer inner diaphragm 432 surrounding the outer shell 430. An inner reservoir 434 of the central portion 407 is fluidly coupled to a cannula 440. See Figure 53.

The infusion device 400 also includes a set with a first member 410 and a second member 420. The first member 410 includes a needle 411, and first and second arms 412 and 414 with barbs 415 on ends. The second member 420 includes shoulders 422 and 424. The first and second members 410 and 420 each form openings 461 and 462, respectively, that are sized to each receive a portion of the central portion 407 of the site 405.

The infusion device 400 can be used as follows. First, the site 405 is positioned on the skin of a patient so that the cannula 440 is introduced into the subcutaneous layer. Next, the first member 410 and second member 420 of the site are placed onto the site 405 so that openings 461 and 462 are positioned about the

ABBOTT Exhibit 2001
Page 18 of 77
Dexcom, Inc. v. Abbott Diabetes Care Inc.
IPR2023-01409

central portion 407, and the first and second members 410 and 420 are slid towards one another from the unlocked to the locked position. As the set is moved to the locked position, the needle 411 is introduced into the central portion 407 of the site 405, moving through the outer shell 430 and into the reservoir 434 to become fluidly coupled to the cannula 440. In addition, the arms 412 and 414 are accepted into the second member 420 until barbs 415 engage the shoulders 422 and 424 in the locked position, as shown in Figure 52.

To move the set from the locked position back into the unlocked position, the barbs 415 are pressed inwardly toward one another until they clear the shoulders 422 and 424, and then the first member 410 is slid away from the second member 420, thereby removing the needle 411 from the central portion 407 of the site 405.

As preferably there is no specific structure provided with infusion device 400 for rotationally orienting the set with the site 405, the set can be oriented at an infinite number of rotational positions with respect to the site 405 as desired. Further, since the central portion 407 of the site and the openings 461 and 462 of the set are preferably circular in shape, the first and second members 410 and 420 of the site can be rotated relative to the site 405 without requiring that the set be completely removed from the site 405.

Referring now to Figures 54-105, example devices and methods for placing a subcutaneous infusion device, such as site 100, into a subcutaneous layer of skin of a patient are disclosed.

Referring to Figures 54 and 55, one example embodiment of a device 1100 is shown. The device 1100 is used to introduce a cannula of an infusion device, such as a set, site, or other access device, into the skin of the patient. The set, site, or other access device can then be used to deliver drugs or other fluid to the patient, such as from an infusion pump.

The device 1100 generally includes a housing 1110, a cylinder hub 1120, a needle hub 1130, a sleeve 1140, a spring 1150, an adhesive portion 1160, and a cap 1170. Each of the components of the device 1100, described further below, is configured to assist in the introduction of a cannula of an infusion device into the skin of a patient.

ABBOTT Exhibit 2001
Page 19 of 77
Dexcom, Inc. v. Abbott Diabetes Care Inc.
IPR2023-01409

Referring now to Figures 56-58, the housing 1110 is shown. The housing 1110 is preferably cylindrical in shape and includes a closed upper end 1111 and an open lower end 1112. The housing 1110 further preferably includes a portion 1118 with a knurled surface to enhance a patient's grip on the housing 1110, as well as a threaded portion 1113 positioned adjacent the open lower end 1112.

Referring now to Figures 59-62, the cylinder hub 1120 is shown in greater detail. The cylinder hub 1120 includes first and second ends 1221 and 1222 and an interior passage 1223. In addition, two opposing slots 1225 are formed on opposite sides of the cylinder hub 1120 and generally extend from a mid-portion 1224 of the hub 1120 to the first end 1221. Further, the cylinder hub 1120 includes opposing apertures 1226 formed in the cylinder hub 1120 adjacent the second end 1222.

The first end 1221 of the cylinder hub 1120 is coupled to the upper end 1111 of the housing 1110 by tabs 1119 on the housing 1110 engaging shoulders 1228 formed by the cylinder hub 1120. See, for example, Figures 59-61, 79A, and 79B. In addition, members 1121 of the housing 1110 are received in slots 1229 of the cylinder hub 1120. In alternative designs, the housing 1110 and cylinder hub 1120 can be formed as a single unit.

Referring now to Figures 63-66, the needle hub 1130 includes a main body 1331 with first and second ends 1332 and 1333, and a needle 1336 (hollow or solid) coupled to the main body 1331. The main body 1331 includes opposing wings 1334 formed at the first end 1332 and opposing barbs 1335 at the second end 1333.

The needle hub 1130 is positioned in the interior passage 1223 of the cylinder hub 1120 such that the opposing wings 1334 of the needle hub 1130 extend through the opposing slots 1225 of the cylinder hub 1120. See Figures 59, 61, 79B, 80B, 81B, 82B, and 83B. In addition, the opposing barbs 1335 of the needle hub 1130 extend through the opposing apertures 1226 of the cylinder hub 1120 and engage shoulders 1227 formed by the apertures 1226 so that the needle hub 1130 is held in a fixed position relative to the cylinder hub 1120 and the housing 1110. See, for example, Figures 59, 61, 79A, 80A, and 81A.

Referring now to Figures 67-70, the sleeve 1140 is shown. The sleeve 1140 is preferably cylindrical in shape and includes first and second ends

ABBOTT Exhibit 2001
Page 20 of 77
Dexcom, Inc. v. Abbott Diabetes Care Inc.
IPR2023-01409

1441 and 1442 and interior passage 1443. Opposing projections 1444 extend into the passage 1443 adjacent to a shoulder 1445. On the exterior of the sleeve 1140 channels 1446 are formed, as well as railways 1447 with barbs 1448 formed on ends thereof.

The sleeve 1140 is coupled to the housing 1110 such that the housing 1110 can be moved longitudinally with respect to the sleeve 1140. Specifically, the railways 1114 of the housing are received in the channels 1446 of the sleeve 1140. Likewise, the railways 1447 of the sleeve 1140 are received in the channels 1115 of the housing 1110. Barbs 1448 on the railways 1447 of the sleeve 1140 engage projections 1116 in the channels 1115 of the housing 1110 so that the housing 1110 remains slideably coupled to the sleeve 1140 in opposition to the force exerted by the spring 1150 (described further below).

The spring 1150 includes first and second ends 1152 and 1154. See, for example, Figure 79B. The spring 1150 surrounds a portion of the cylinder hub 1120 and extends within the passage 1443 of the sleeve 1140. The first end 1152 of the spring 1150 is seated on the shoulder 1445 of the sleeve 1140, and the second end 1154 of the spring 1150 engages the opposing wings 1334 of the needle hub 1130 extending through the opposing slots 1225 of the cylinder hub 1120.

The spring 1150 is in a compressed state as shown in Figures 79A, 79B, 27A, 27B, 28A, and 28B and therefore applies force against the wings 1334 of the needle hub 1130, biasing the needle hub 1130 in an upward direction. However, barbs 1335 of the main body 1331 of the needle hub 1130 are engaged against shoulders 1227 of the apertures 1226 of the cylinder hub 1120 to retain the needle hub 1130 in place with respect to the cylinder hub 1120. See, for example, Figure 79A. Likewise, the spring 1150 forces the housing 1110 and the sleeve 1140 apart until barbs 1448 of the sleeve 1140 engage projections 1115 of the housing 1110 to maintain coupling between the housing 1110 and the sleeve 1140.

Referring now to Figures 71-73, an adhesive portion 1160 is positioned on a surface 1449 at the second end 1442 of the sleeve 1140 (see Figures 67 and 70). The surface 1449 preferably acts as a framework that stabilizes the adhesive portion 1160 prior to placement on the patient. In a preferred embodiment shown, the adhesive portion 1160 includes layers 1662, 1663, and 1664, as well as

ABBOTT Exhibit 2001
Page 21 of 77
Dexcom, Inc. v. Abbott Diabetes Care Inc.
IPR2023-01409

liners 1661 and 1665. Liners 1661 and 1665 also preferably include tabs 1666 and 1667 that allow for removal of the liners 1661 and 1665 as described below.

The adhesive portion 1160 can be coupled to the surface 1449 of sleeve 1140 in a variety of manners. In a preferred embodiment, the liner 1661 is removed, and layer 1662 is coupled to the surface 1449 using an adhesive. In addition, as described further below, in a preferred embodiment a top surface 1669 of layer 1664 and/or a lower end of the infusion device includes an adhesive to couple the infusion device to the adhesive portion 1160 as the infusion device is moved into contact with the adhesive portion. See Figures 81A, 81B, and 81C.

In addition, the liner 1665 is preferably removed, and a lower surface 1668 of the layer 1664 includes an adhesive to couple the adhesive portion 1160 to the skin of the patient.

Preferably, the site is loaded into the device 1100 prior to application of the adhesive portion 1160 onto the device 1100, and preferably both liners 1661 and 1665 are removed as described above prior to attachment of the adhesive portion to the sleeve 1140 and coupling of the cap 1170 to the housing 1110. In this manner, the patient preferably does not need to remove any liners prior to application of the adhesive portion 1160 to the skin and introduction of the site into the skin.

Preferably, the layer 1664 does not include any holes, but instead is pierced by the needle 1336 as the needle 1336 is advanced towards the skin, as described further below. This configuration can enhance the fit between the adhesive portion 1160 and the skin of the patient.

In a preferred embodiment, the adhesive portion 1160 includes adhesive on one or more of surfaces 1668 and 1669 to allow the adhesive portion 1160 to be coupled to the sleeve 1140, site, and/or to the skin of the patient. Typical adhesives that can be used on the adhesive portion 1160 include, without limitation, acrylic adhesive, synthetic rubber-based adhesive, acrylate adhesive, and silicone-based adhesive.

In example embodiments, the adhesive portion 1160 includes films with adhesives thereon, such as a Tegaderm™ film manufactured by 3M™ or an IV3000™ film manufactured by Smith & Nephew. For example, in the preferred

ABBOTT Exhibit 2001
Page 22 of 77
Dexcom, Inc. v. Abbott Diabetes Care Inc.
IPR2023-01409

embodiment shown, the tape layer 1662 is 3M™ 9731 tape, and layers 1663 and 1664 are 3M™ Tegaderm™ p/n 9842.

Referring now to Figures 74-76, the cap 1170 is illustrated. The cap 1170 includes a closed first end 1772 and an open second end 1774. The cap 1170 preferably includes an exterior with a knurled surface 1778 to enhance the patient's grip on the cap 1170. In addition, the interior of the cap 1170 includes a threaded portion 1776 positioned adjacent the open second end 1774 so that the threaded portion 1776 can be threaded onto the threaded portion 1113 of the housing 1110 to seal the device 1100. See Figures 54, 79A, and 79B.

In a preferred embodiment, a gasket 1122 is provided on the threaded portion 1113 of the housing 1110 to create a seal between the cap 1170 and the housing 1110 as the cap 1170 is threaded onto the housing 1110. See Figures 79A and 79B. In this manner, the internal components of the device 1100 (e.g., needle 1336 and site 1800) can be maintained in a substantially sterile state prior to removal of the cap 1170. Further, the cap 1170 can function to maintain the device 1100 in a ship state (i.e., the housing 1110 can not be moved relative to the sleeve 1140) prior to removal of the cap 1170 from the housing 1110.

In alternative embodiments, the cap 1170 and/or housing 1110 can be formed to provide a tamper-evident seal so that the patient can determine when the cap 1170 has been previously uncoupled from the housing 1110. For example, in an alternative embodiment of the device 1100' shown in Figures 103-105, a tamper-evident band 1178 is shown. The band 1178 includes tabs 1179 that are coupled to the cap 1170 as shown in Figure 103. As the cap 1170 is removed from the housing 1110 (i.e., threads 1514 on cap 1170 are unthreaded from threads 1512 on housing 1110), the tabs 1179 break away from the cap 1170, and the seal 1178 remains coupled to the housing 1110, as shown in Figure 104. If the cap 1170 is later threaded back onto the device 1100', the breaks between the tabs 1179 and the cap 1170 are evident, allowing the patient to identify that the cap 1170 of the device 1100' has been previously removed.

The cap 1170 and band 1178 can be placed on the device 1100' during manufacturing as a single unit. For example, as shown in Figure 105, the cap 1170 and band 1178 can be pushed onto the device 1100' (note that threads 1512 and 1514 can be rounded to allow the cap 1170 to be pressed onto the device 1100') so

ABBOTT Exhibit 2001
Page 23 of 77
Dexcom, Inc. v. Abbott Diabetes Care Inc.
IPR2023-01409

that portion 1520 of the band 1178 passes over and engages shoulder 1522 of the housing 1110 to retain the band 1178 on the housing 1110 when the cap 1170 is unthreaded and tabs 1179 are broken. In addition, notches 1524 formed periodically along the band 1178 prevent the cap 1170 from bottoming out against the band 1178 as the cap 1170 and band 1178 are pushed onto the device 1100' so that the tabs 1179 remain intact. A portion 1502 extending along an interior circumference of the cap 1170 can also be formed to engage the outer surface of the housing 1110 to create a seal between the housing 1110 and the cap 1170.

It can be desirable to provide a tamper-evident seal, for example, so that the patient can assure that the device 1100' is has not been previously opened and is sterile prior to use. Other methods of indicating tampering can also be used.

As previously noted, device 1100 can be used to insert a cannula 1806 of an infusion device, such as site 1800, into the subcutaneous layer of skin of a patient. In preferred embodiments, the site 1800 is configured in a manner similar to sites 100 or 450 described above.

Referring now to Figures 54 and 67-83, the device 1100 is illustrated in various states of use. As shown in Figures 54, 79A, and 79B, the device 1100 is in a ship state prior to use. As shown in Figures 77, 80A, and 80B, the device 1100 is in a delivery state ready to deliver the cannula of an infusion device into the skin of the patient. As shown in Figures 78, 81A, 81B, and 81C the device 1100 is in a trigger state, or the state at which the needle 1336 and the cannula of the site 1800 have been fully inserted into the subcutaneous layer of skin of the patient, and the needle hub 1130 and associated needle 1336 are about to be retracted. As shown in Figures 82A and 82B, the device 1100 is in a retracted state with the needle hub 1130 and associated needle 1336 having been retracted into the device 1100. As shown in Figures 83A and 83B, the device 1100 is in a fully retracted state with the housing 1110 and sleeve 1140 returned to an uncompressed position relative to one another.

An example method of use of the device 1100 is as follows. The device 1100 is provided to a patient with the cap 1170 coupled to the housing 1110, as shown in Figures 54, 79A, and 79B. Preferably, the site 1800 has been previously loaded (i.e., preloaded) into the device 1100 during, for example, the manufacturing process for the device 1100.

ABBOTT Exhibit 2001
Page 24 of 77
Dexcom, Inc. v. Abbott Diabetes Care Inc.
IPR2023-01409

For example, the site 1800 can be preloaded by introducing the site 1800 onto the needle 1336. More particularly, a diaphragm of the site 1800 is positioned on the needle 1336, and the site 1800 is moved further onto the needle 1336 so that the needle 1336 extends through the cannula 1806. With the site 1800 positioned on the needle 1336, the cap 1170 can be coupled to the device 1100.

Referring back to the method of using the device 1100, the cap 1170 is then unthreaded from the housing 1110, and the sleeve 1140 of the device 1100 is positioned so that the adhesive portion 1160 (i.e., surface 1668) contacts the skin 1900 of the patient. See Figures 77, 80A, and 80B.

Next, in the illustrated preferred embodiment, the patient applies pressure to the upper end 1111 of the housing 1110 to move the housing 1110 and associated structures including the cylinder hub 1120 and needle hub 1130 (including needle 1336 and site 1800) in a direction A with respect to the sleeve 1140 and toward the skin 1900 of the patient. As the needle 1336 of the needle hub 1130 and associated site 1800 are moved in the direction A, the needle 1336 and the cannula 1806 of the site 1800 are introduced into the skin 1900 of the patient. In addition, as the needle hub 1130 is moved toward the sleeve 1140, the spring 1150 is further compressed.

Once the needle 1336 and cannula 1806 of the site 1800 have been fully inserted into the skin 1900, the device 1100 is in a trigger state, as illustrated in Figures 78, 81A, 81B, and 81C. In this state, the barbs 1335 that couple the needle hub 1130 to the cylinder hub 1120 are biased inwardly through contact with the projections 1444 formed by the sleeve 1140.

As the housing 1110, cylinder hub 1120, and needle hub 1130 are displaced further in the direction A, it is preferable that the needle hub 1130 is positioned so that a lower portion of the site 1800 travels slightly beyond the second end 1442 of the sleeve 1140 as shown in Figure 81C. This "over-travel" assures that the adhesive portion 1160 is properly sheared away from the surface 1449 of the sleeve 1140 and allows for the coupling of the site 1800 to the adhesive portion 1160.

For example, in preferred embodiments, the lower portion of the site 1800 travels beyond the second end 1442 of the sleeve 1140 by between 50 to 100 thousandths of an inch, more preferably approximately 70 thousandths of an inch.

ABBOTT Exhibit 2001
Page 25 of 77
Dexcom, Inc. v. Abbott Diabetes Care Inc.
IPR2023-01409

Adhesive can be provided on the adhesive portion 1160 of the device 1100 and/or the site 1800 to couple the site 1800 to the adhesive portion 1160.

In addition, as the housing 1110, cylinder hub 1120, and needle hub 1130 are displaced further in the direction A as described above, barbs 1335 of the needle hub 1130 are forced inwardly by the projections 1444 of the sleeve 1140, and the barbs 1335 are thereby uncoupled from engagement with the cylinder hub 1120. Once the barbs 1335 of the needle hub 1130 are released from the cylinder hub 1120, the needle hub 1130 is free to move longitudinally within the passage 1223 of the cylinder hub 1120 in a direction B opposite to that of the direction A. The spring 1150, which has been compressed through the movement of the housing 1110 in the direction A, propels the needle hub 1130 and associated needle 1336 in the direction B up through the cylinder hub 1120 into the upper end 1111 of the housing 1110, while the site 1800 and associated cannula 1806 are held on the skin 1900 of the patient, as shown in Figures 82A and 82B.

Once the patient removes pressure from the upper end 1111 of the housing 1110, the spring 1150 causes the housing 1110 and cylinder hub 1120 to move in the direction B as shown in Figures 83A and 83B to a fully retracted state.

Finally, the sleeve 1140 is removed from contact with the skin 1900, and the cap 1170 can be replaced onto the threaded portion 1113 of the housing 1110 of the device 1100. Subsequently, the device 1100 can be discarded.

Many alternative designs for the device can be provided. For example, in Figure 84 a portion of an alternative device is shown including cylinder hub 1120' and needle hub 1130'. The cylinder hub 1120' and needle hub 1130' are similar to cylinder hub 1120 and needle hub 1130 described above, except that the cylinder hub 1120' includes projections 1129 formed near the first end 1221 of the cylinder hub 1120', and the needle hub 1130' includes barbs 1139 formed on the first end 1332. The barbs 1139 are configured to ride inside the interior passage 1223 of the cylinder hub 1120' during retraction of the needle 1336 in the direction B until the barbs 1139 extend beyond the projections 1129 of the cylinder hub 1120'. Once this occurs, the barbs 1139 expand outward slightly. In this configuration as shown in Figure 84, the barbs 1139 prevent the needle hub 1130' and associated needle 1336 from being moved back in the direction A. In this manner, the barbs 1129 lock the needle hub 1130' in the retracted position. This configuration can be beneficial,

ABBOTT Exhibit 2001
Page 26 of 77
Dexcom, Inc. v. Abbott Diabetes Care Inc.
IPR2023-01409

used separately or in conjunction with the force of the spring 1150 forcing the needle hub 1130' in the direction B, to further reduce the possibility of inadvertent exposure to the needle 1336 after retraction.

According to another alternative embodiment, a device 1100" is illustrated in Figures 85-91. Device 1100" is similar to device 1100 described above, except that the sleeve (e.g., sleeve 1140) is replaced with a trigger 1140'. In device 1100", the trigger 1140' (see Figures 88-91) does not function as sleeve 1140 to shroud the needle 1336 prior to insertion, but instead trigger 1140' functions to cause retraction of the needle 1336 upon full insertion, as described further below.

In this embodiment of device 1100", once the cap 1170 has been removed, needle 1336 is exposed as shown in Figures 86A and 86B. In this configuration, instead of moving the housing 1110, cylinder hub 1120, and needle hub 1130 longitudinally with respect to the housing, the patient simply inserts the needle 1336 and associated cannula 1806 of the site into the skin by grasping the housing 1110 and introducing the exposed needle 1336 into the skin.

As the needle 1336 and cannula 1806 reaches full insertion, the trigger 1140' contacts the skin and thereby causes the needle hub 1130 including the needle 1336 to be retracted into the housing 1110, leaving the site 1800 in place on the skin. In the illustrated embodiment, the trigger 1140' is automatic, in that the trigger 1140' is configured to cause barbs 1335 of the needle hub 1130 to be displace inwardly to release the needle hub 1130 from the cylinder hub 1120, and the spring 1150 can thereupon move the needle hub 1130 and associated needle 1336 in the direction B into an upper portion of the housing 1110 as shown in Figures 87A and 87B.

In alternative embodiments, the trigger 1140' can be configured to be manually actuated by the patient to cause retraction of the needle hub 1130 and associated needle 1336 once the cannula 1806 has been fully inserted.

Referring now to Figures 92-96, another embodiment of a device 1100'" is shown. The device 1100'" is a manual device in that the device 1100'" includes only a housing 1110', needle 1336, and cap (not shown) that can be threaded onto the housing 1110'. Preferably, a site (not shown) can be preloaded onto the needle 1336 and the cap placed on the housing 1110' to create a sterile environment prior to use. To use device 1100'", the patient preferably removes the

ABBOTT Exhibit 2001
Page 27 of 77
Dexcom, Inc. v. Abbott Diabetes Care Inc.
IPR2023-01409

cap from the housing 1110' and, holding the housing 1110' inserts the needle and associated cannula of the site into the skin. Once the cannula is completely inserted, the patient moves the housing 1110' in the opposite direction to remove the needle from the skin while leaving the site in place. Finally, the patient preferably reapplies the cap to the housing 1110' to reduce the chance for further inadvertent exposure to the needle 1336. The device 1100''' can then be discarded or reused as desired.

Referring now to Figures 97-102, another example embodiment of a device 1950 for assisting in the introduction of a site 1970 is shown. The device 1950 differs from the device 1100. For example, while the device 1100 can be manually driven by the patient to insert the needle and cannula of the site into the skin, the device 1950 is automated in that a spring 1960 is used to drive the needle and cannula of the site into the skin of the patient.

The device 1950 includes a housing 1958, cap 1952, lock member 1962, needle hub 1965, main body 1980, retainer body 1978, and sleeve 1982. Also included are the first spring 1960 and a second spring 1966.

The device 1950 functions as follows. The lock member 1962, needle hub 1964, and retainer body 1978 are moveable longitudinally with respect to the housing 1958 and sleeve 1982 of the device 1950. The lock member 1962 is positioned so that needle 1968 of the needle hub 1965 is accessible from open end 1984 of the device 1950. The site 1970 can then be loaded onto the needle 1968 by threading the cannula of the site 1970 onto the needle 1968. Openings 1986 are formed by the housing 1958 to accommodate sites 1970 of various sizes (e.g., wings formed on sites).

Once the site 1970 has been loaded onto the needle 1968, the lock member 1962 is moved in a direction C by the patient using projections 1974 that are accessible through slot 1976 of housing 1958 until barbs 1956 of the lock member 1962 engage an outer surface of the housing 1958, as shown in Figure 102. In this position, the device 1950 is ready to insert the site 1970 into the skin of the patient.

Next, the sleeve 1982 of the device 1950 is placed against the skin of the patient. To initiate insertion of the site 1970, the cap 1952 is pressed by the patient. Once pressed, shoulders 1954 on an opposite end of the cap 1952 engage and push the barbs 1956 of the lock member 1962 toward one another to disengage

ABBOTT Exhibit 2001
Page 28 of 77
Dexcom, Inc. v. Abbott Diabetes Care Inc.
IPR2023-01409

the barbs 1956 from the housing 1958. When the barbs 1956 clear the housing 1958, the lock member 1962, main body 1980, needle hub 1965, retainer body 1978, and associated site 1970 are moved by the first spring 1960 a the direction D.

The device 1950 continues to move the site 1970 towards the skin, thereby introducing the needle 1968 and cannula of the site 1970 into the skin. As the cannula of the site 1970 is fully inserted into the skin, barbs 1964 of the needle hub 1965 engage ramped surfaces 1972 of the sleeve 1982, causing the barbs 1964 to be forced toward one another. When the cannula of the site 1970 is fully inserted into the skin, the barbs 1964 have been forced inwardly by the surfaces 1972 sufficiently to clear ends 1988 of the main body 1980, and the second spring 1966 moves the needle hub 1965 in the direction C into a passage 1990 formed by the main body 1980.

As the needle hub 1965 is moved by the second spring 1966 into the main body 1980, the needle 1968 is removed from the site 1970, leaving the site 1970 in place on the skin. In addition, the retainer body 1978 remains in a position adjacent the open end 1984 of the sleeve 1982 so that once the device 1950 is removed from the skin of the patient, the retainer body 1978 protects the patient from further contact with the needle 1968.

Infusion devices made in accordance with the principles described herein can be advantageous for various reasons. For example, the set can be coupled in various selectable rotational orientations with respect to the site. In some embodiments, a plurality of orientations can be provided. This allows a patient to rotationally orient the set (and associated tube coupled to the set) as desired so that the tube can extend, for example, towards an infusion pump regardless of where the site is placed on the body of the patient.

In addition, the set and associated tube can be removed from the site multiple times while leaving the site on the skin. This can be desirable if the patient wants to reorient the set with respect to the site, or if the patient wants to remove the set from the site for a period of time, such as if the patient wishes to shower and then replace the set onto the site. Further, the site is preferably configured to have a low profile to be unobtrusive to the patient.

The engagement of the set with the site and sliding action of the set from the unlocked to locked position can also be advantageous in that a patient can

ABBOTT Exhibit 2001
Page 29 of 77
Dexcom, Inc. v. Abbott Diabetes Care Inc.
IPR2023-01409

preferably accomplish orientation and coupling of the set to the site using a single hand. This can be preferable, for example, if the site has been placed on a portion of the body of the patient that is not easily reached using two hands, or cannot easily be seen by the patient (e.g., if the site is placed on the back of the patient).

Further, the configuration of the set functions to protect the patient from inadvertent contact with the hollow needle (e.g., needles 214 and 411) used to pierce the diaphragm and deliver the substance to the site. For example, the outer arms 220 and 222 and the inner arms 226 and 228 of the first member 210 of the set 200 generally surround the needle 214 and function to reduce the chance that the patient will inadvertently contact the needle.

Also, the configuration of the diaphragm in the site can be preferable in that a single diaphragm can function to both allow introduction of the cannula of the site into the body using one needle, as well as coupling of the set with the site using a second needle. In addition, the diaphragm can preferably be held within the site through frictional engagement between the diaphragm and the site without requiring additional structure to retain the diaphragm in the site.

Although examples of infusion devices have been described herein, various modifications can be made to the devices. For example, as noted above the member 120 of the site 100 and the aperture 270 of the set 200 can be formed in a variety of shapes to allow the set 200 to be oriented in multiple positions with respect to the site 100. In addition, a retaining member can be fitted over the open top of the member 120 to further retain the diaphragm 150 in position in the cavity 121

In another alternative embodiment, the second member 250 of the site 200 can be constructed to include a cover portion extending from the main body 260 so that when the set 200 is moved to the locked position the cover extends over the closed end 154 of the diaphragm 150 to reduce exposure of the set and site to outside contaminants.

Devices used to insert infusion devices made in accordance with the principles described herein can be advantageous for various reasons. For example, each device can provide ease in placement of the site on the skin, preferably allowing the user to place the site with the device where desired on the body using a single hand to operate the device.

ABBOTT Exhibit 2001
Page 30 of 77
Dexcom, Inc. v. Abbott Diabetes Care Inc.
IPR2023-01409

Further, several embodiments disclosed herein include structures that cover or hide the needle prior to insertion of the site, and also cause the needle to be retracted into the device after insertion to protect against inadvertent contact with the needle.

In addition, several embodiments of the devices disclosed herein can automatically retract the needle while leaving the site placed on the skin, thereby reducing the patient's contact with the exposed needle. Preferably, this retraction is automatic in that once the device reaches the trigger state there is no further action required by the patient to cause the needle to be retracted. The automatic retraction of the needle also limits the dwell time of the needle in the patient, increasing comfort for the patient.

In addition, the action of inserting the needle into position on the skin using the devices disclosed herein can function to hold the site on the surface of the skin during needle retraction. This can assist in adherence of the adhesive portion to the skin and reduce the chances of separation between the adhesive portion and site and the skin during needle retraction.

In addition, the housing and cap of several of embodiments of the devices disclosed herein allow the various components of the devices including the needle and infusion device to be delivered to the patient in a self-contained, sterile environment prior to use. The configuration further minimizes the need for packaging surrounding the devices, reducing manufacturing cost and increasing ease in use of the devices. The configuration also allows the housing and cap to protect and maintain the site on the needle of the device. The configuration and disposable nature of the devices further allow ease in discarding of the devices after use.

Also, the configuration of several embodiments of the devices disclosed herein can allow the site to be preloaded into the device, thereby providing ease of use for the patient and reducing the patient's exposure to the needle. For example, single-use embodiments disclosed herein preferably do not require that the patient load the site into the device prior to insertion, but instead provide the device with the site preloaded.

Some embodiments of the devices allow for both automatic delivery of the site and withdrawal of the needle, thereby automating the entire introduction process for the patient.

ABBOTT Exhibit 2001
Page 31 of 77
Dexcom, Inc. v. Abbott Diabetes Care Inc.
IPR2023-01409

While single use devices are preferred, reusable devices wherein the needle retracts but can be reloaded are also anticipated.

The above specification, examples and data provide a complete description of the manufacture and of the invention. Since many embodiments of the invention can be made without departing from the spirit and scope of the invention, the invention resides in the claims hereinafter appended.

ABBOTT Exhibit 2001
Page 32 of 77
Dexcom, Inc. v. Abbott Diabetes Care Inc.
IPR2023-01409

What is claimed is:

1. A method for introducing an infusion device into a subcutaneous layer of skin of a patient, comprising:

providing an infusion device preloaded onto a needle of an insertion device so that the needle extends through a cannula of the infusion device;

positioning the insertion device adjacent to the skin of the patient;

introducing the cannula of the infusion device into a subcutaneous layer of skin of a patient using the needle of the insertion device; and

upon full insertion of the cannula by the insertion device and the insertion device reaching a trigger state, automatically retracting the needle of the insertion device while leaving the infusion device positioned on the skin of the patient.

2. The method of claim 1, wherein the step of loading further comprises coupling a cap to the insertion device.

3. The method of claim 2, further comprising removing the cap prior to introducing the cannula into the subcutaneous layer of skin of the patient.

4. The method of claim 1, wherein the infusion device includes a site having the cannula, and a set, and the method further comprises coupling the set to the site of the infusion device positioned on the skin of the patient.

5. The method of claim 4, wherein the step of coupling the set to the site of the infusion device further comprises:

positioning the set in an unlocked position over the site;

positioning the set onto the site; and

moving the set from the unlocked position to a locked position to couple the set to the site and to introduce a needle of the set into a reservoir defined by the site.

6. The method of claim 5, wherein the step of moving further comprises sliding a first member of the set relative to a second member of the set to move the set from the unlocked position to the locked position.

ABBOTT Exhibit 2001
Page 33 of 77
Dexcom, Inc. v. Abbott Diabetes Care Inc.
IPR2023-01409

7. The method of claim 5, further comprising moving the set from the locked position to the unlocked position.

8. The method of claim 7, further comprising:

reorienting the set rotationally relative to the site; and

moving the set from the unlocked position to the locked position to recouple the set to the site and to reintroduce a needle of the set into a reservoir defined by the site.

9. The method of claim 1, further comprising providing a sleeve coupled to the insertion device to hide the needle prior to retraction.

10. An apparatus for delivery of a substance to a subcutaneous layer of skin of a patient, the apparatus comprising:

an insertion device for introducing an infusion device into a subcutaneous layer of skin of a patient, the insertion device including a housing defining an internal cavity, a needle coupled to the housing, and a member configured to move the needle into a retracted state; and

an infusion device including a site having a base positionable relative to skin of a patient, a cannula extending generally perpendicularly to the base and configured to be introduced into a subcutaneous layer of skin of the patient using the needle of the insertion device, and a diaphragm coupled to the base and defining an internal reservoir;

wherein the needle of the insertion device extends through the diaphragm and the cannula of the site to couple the site to the insertion device; and

wherein the insertion device includes a cap to seal the insertion device prior to removal of the cap from the insertion device.

11. The apparatus of claim 10, further comprising a set including a first member including a hollow needle and a second member defining an aperture configured to accept the site.

ABBOTT Exhibit 2001
Page 34 of 77
Dexcom, Inc. v. Abbott Diabetes Care Inc.
IPR2023-01409

12. The apparatus of claim 11, wherein the set includes tubing that is in fluid communication with the needle.

13. The apparatus of claim 12, wherein the set is mounted onto the site.

14. The apparatus of claim 10, further comprising an adhesive portion coupled to the infusion device, wherein the adhesive portion couples the infusion device to the skin of the patient.

15. The apparatus of claim 10, further comprising a tamper-evident band coupled by tabs to the cap, wherein the tabs are broken as the cap is removed from the insertion device and the tamper-evident band remains coupled to the insertion device.

16. An apparatus for delivery of a substance to a subcutaneous layer of skin of a patient, the apparatus comprising:

a site defining a central aperture and a cavity, a diaphragm positioned in the cavity and defining a reservoir, and a cannula extending through the central aperture and having a first end that is fluidly coupled to the reservoir of the diaphragm; and

an insertion device including a housing, a hub coupled to the housing and defining an interior passage, a needle hub including a needle, the needle hub being positioned in the interior passage of the hub so that the needle hub is held in a fixed position relative to the hub and the housing, and a spring engaging the needle hub;

wherein the site is loaded onto the insertion device by introducing the diaphragm and the cannula of the site onto the needle of the insertion device; and

wherein the housing, hub, and needle hub are movable to introduce the needle of the needle hub and associated cannula of an infusion device into a subcutaneous layer of skin, and wherein, upon the needle and associated infusion device being fully inserted into the subcutaneous layer of skin, the needle hub is slideable relative to the hub, and the needle hub including the needle are automatically moved by the spring through the passage of the hub to a retracted state, leaving the infusion device positioned on the skin of the patient.

ABBOTT Exhibit 2001
Page 35 of 77
Dexcom, Inc. v. Abbott Diabetes Care Inc.
IPR2023-01409

17. The apparatus of claim 16, further comprising a sleeve coupled to the housing to hide the needle prior to retraction.

18. The apparatus of claim 16, further comprising a set including first and second members, the first member including a hollow needle fluidly coupled to an access port, and the second member defining an opening extending through the second member, and the first and second members being slideable relative to one another between an unlocked position and a locked position, wherein the set, in the unlocked position, is positionable on the site so that at least a portion of the site is received in the opening of the second member of the set, and the first member is slideable relative to the second member to move from the unlocked to the locked position to couple the set to the site, and as the first member is slid towards the second member the needle of the first member is introduceable into the reservoir of the diaphragm.

19. The apparatus of claim 18, wherein the diaphragm of the site is a single unit including an upper end that is pierced by the needle of the insertion device, and including a side wall that is pierced by the hollow needle of the first member of the set.

20. The apparatus of claim 16, further comprising further comprising an adhesive portion coupled to the site, wherein the adhesive portion couples the site to the skin of the patient.

21. A method for introducing an infusion device, comprising:

uncapping the insertion device to place the insertion device in a delivery state;

positioning the insertion device adjacent to skin;

moving a needle of the insertion device from the delivery state to the trigger state to thereby introduce a cannula of the site into the skin; and

automatically retracting the needle to place the insertion device in a retracted state.

ABBOTT Exhibit 2001
Page 36 of 77
Dexcom, Inc. v. Abbott Diabetes Care Inc.
IPR2023-01409

22. The method of claim 21, further comprising:

preloading the site onto the needle of the insertion device; and

capping the insertion device to place the device in a ship state.

23. The method of claim 21, further comprising:

positioning a set of the infusion device over the site at a desired orientation with respect to the site; and

moving the set from an unlocked position to a locked position to couple the set to the site.

24. The method of claim 21, further comprising providing a tamper-evident seal on the insertion device.

ABBOTT Exhibit 2001
Page 37 of 77
Dexcom, Inc. v. Abbott Diabetes Care Inc.
IPR2023-01409

FIG.1

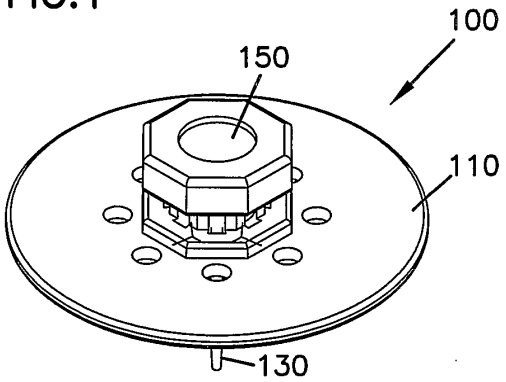

FIG.2

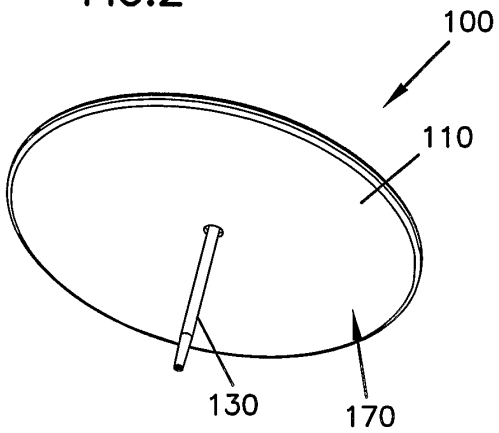

FIG.3

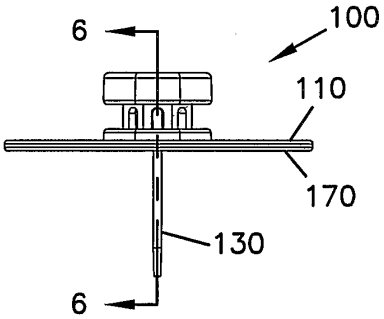

FIG.4

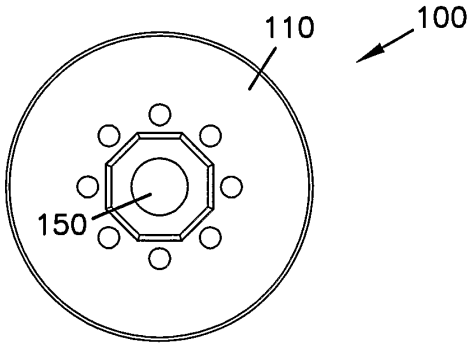

FIG.5

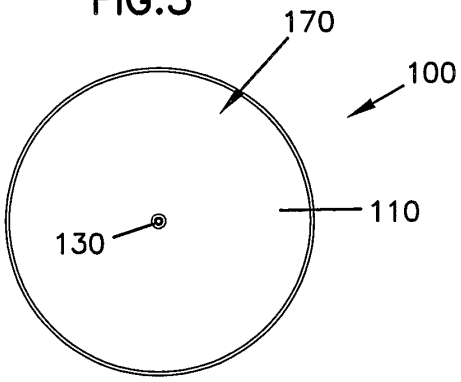

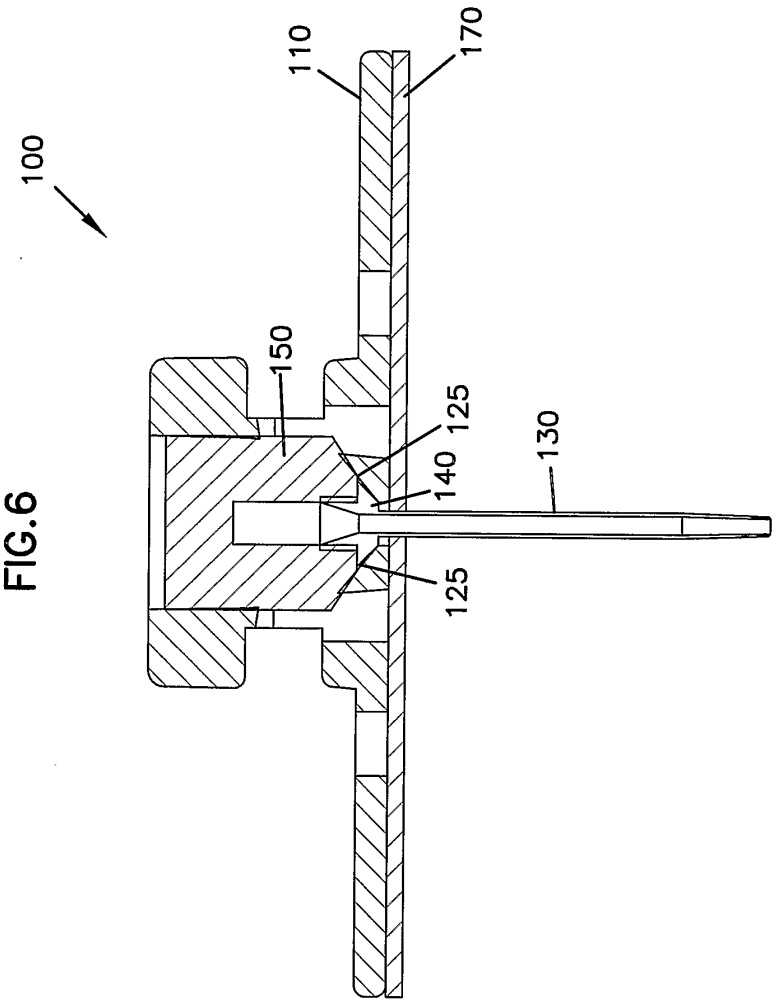

FIG.6

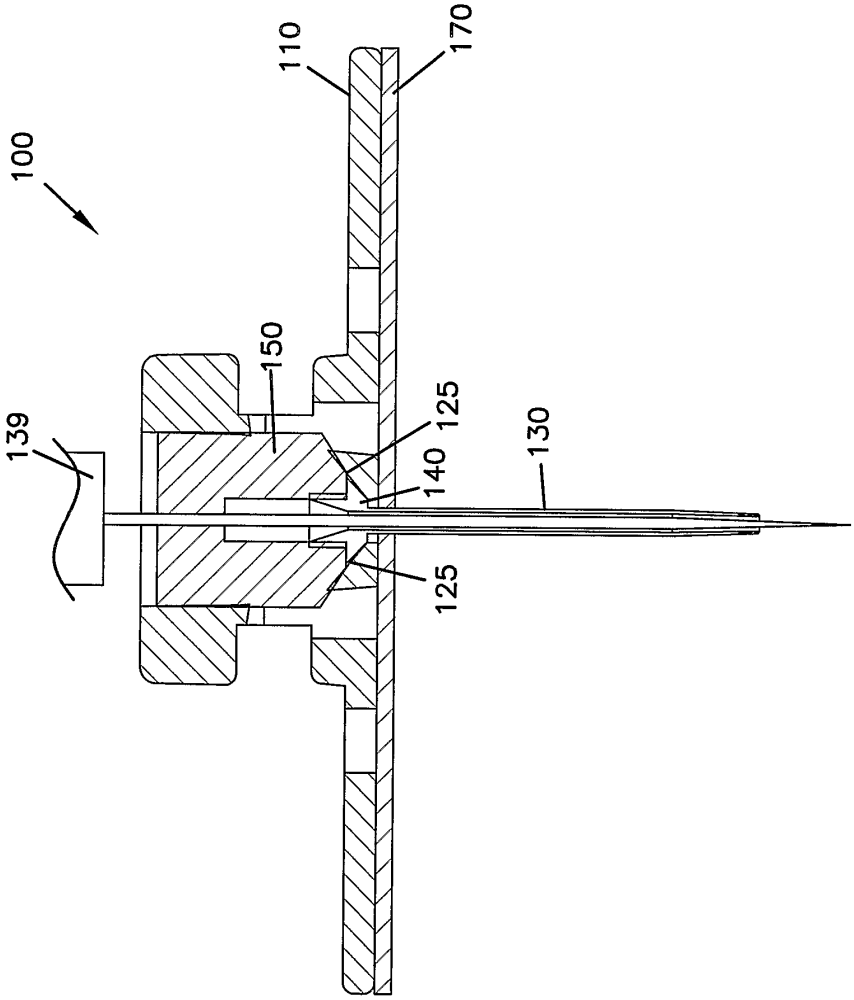

FIG.6A

FIG.7

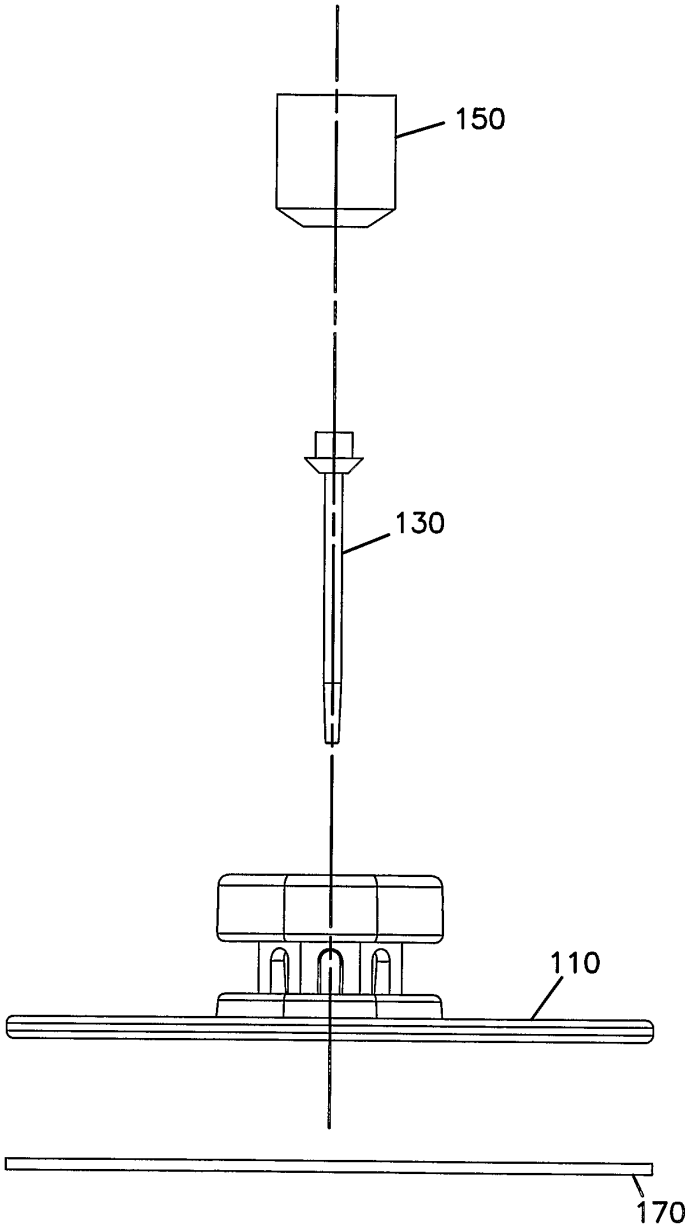

FIG.8

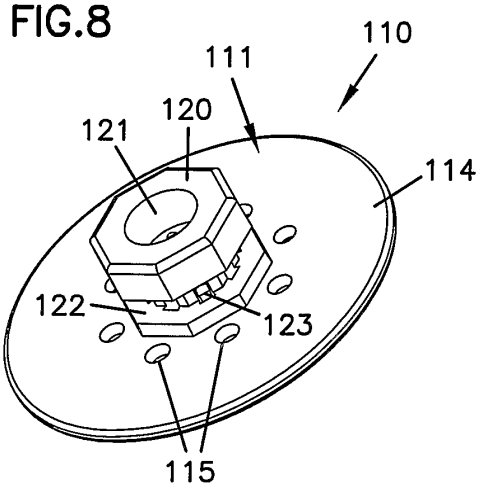

FIG.9

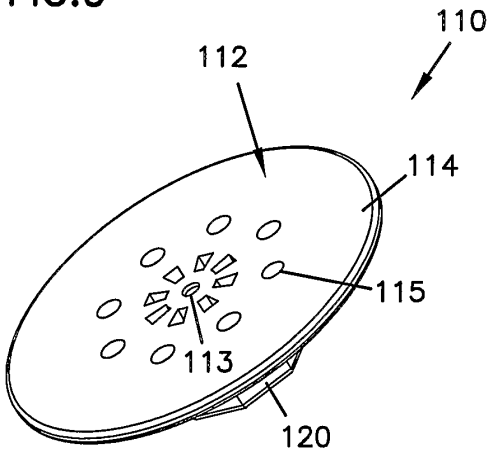

FIG.10

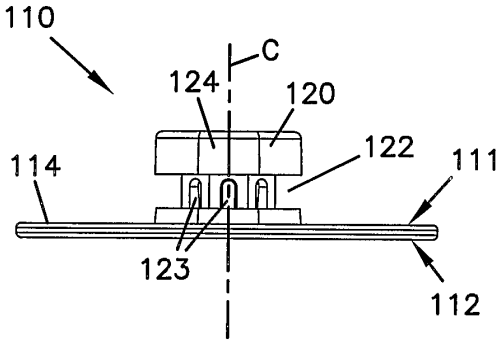

FIG.11

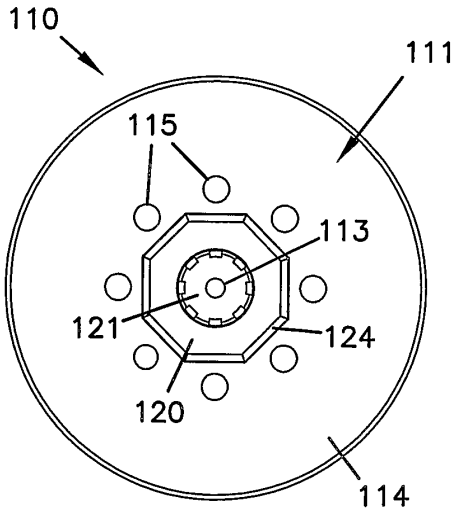

FIG.12

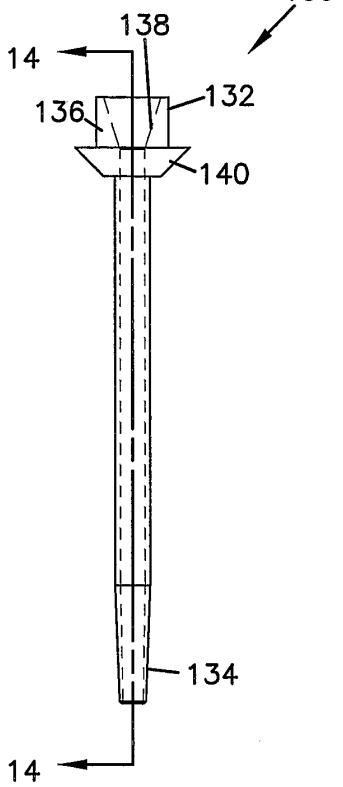

FIG.13

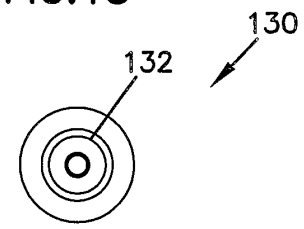

FIG.14

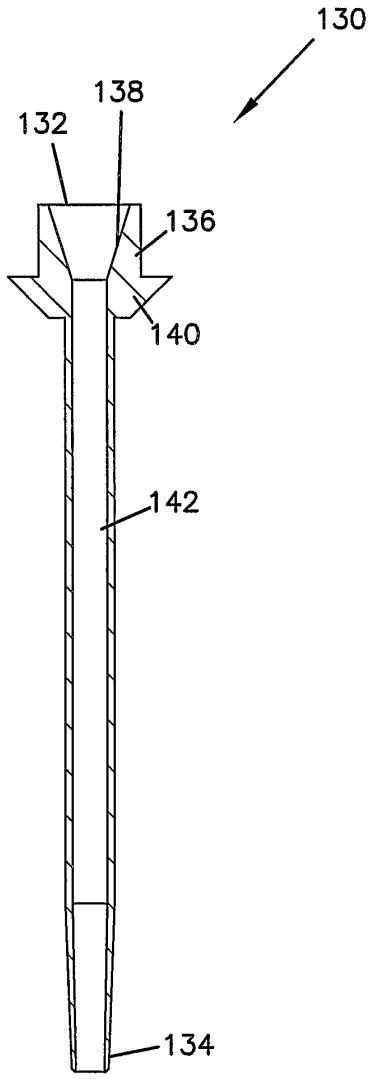

FIG.15

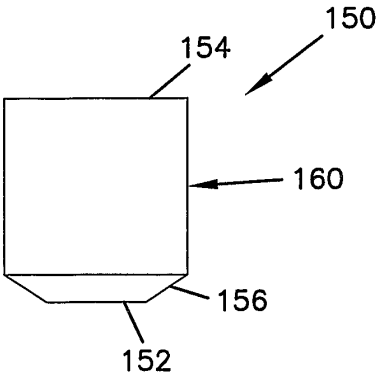

FIG.16

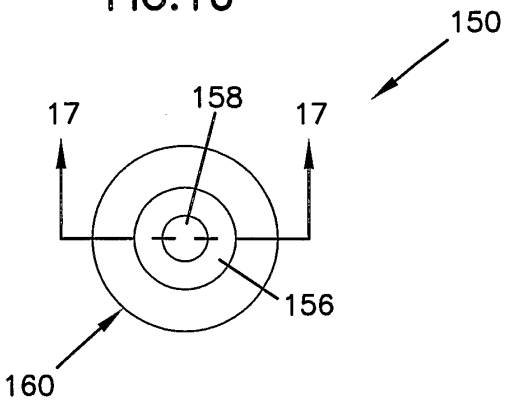

FIG.17

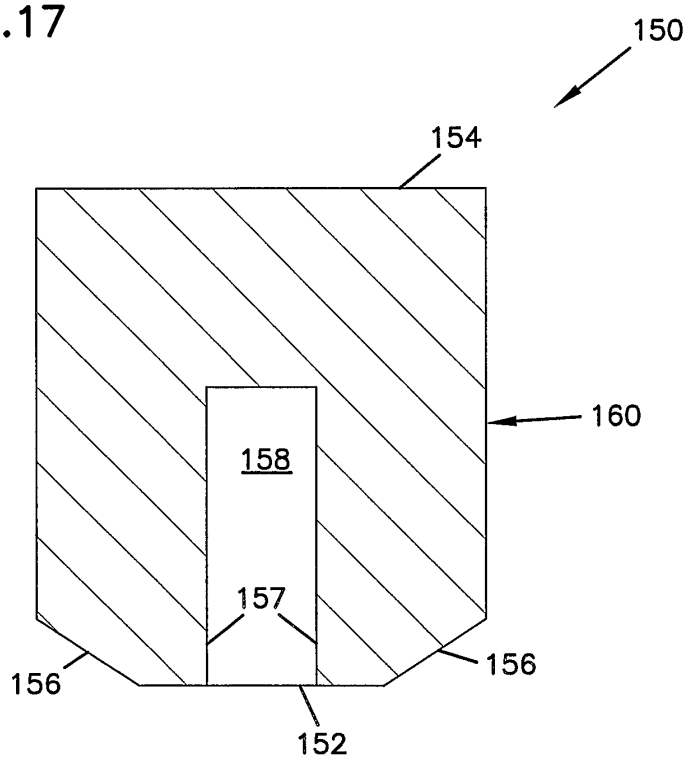

FIG.18

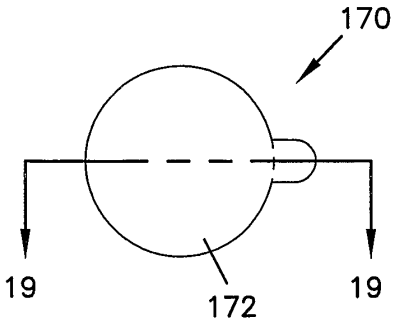

FIG.19

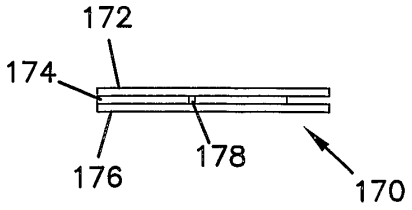

FIG.20

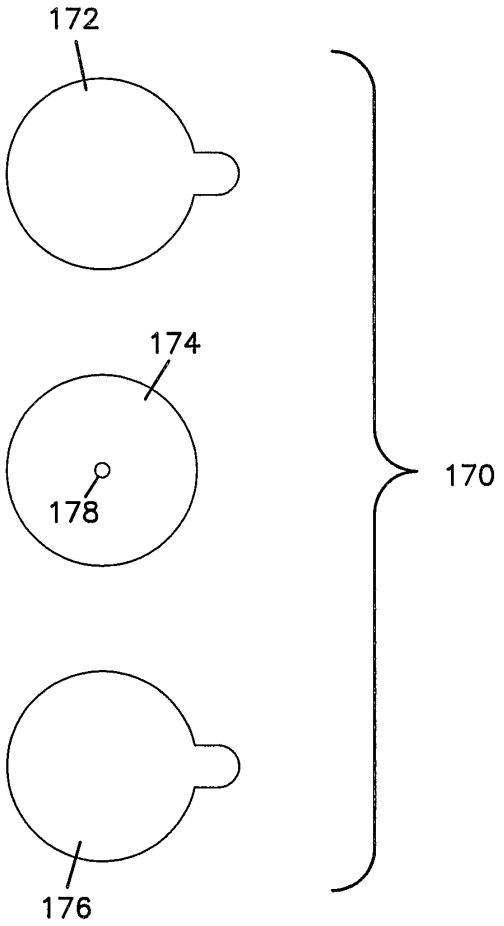

FIG.21

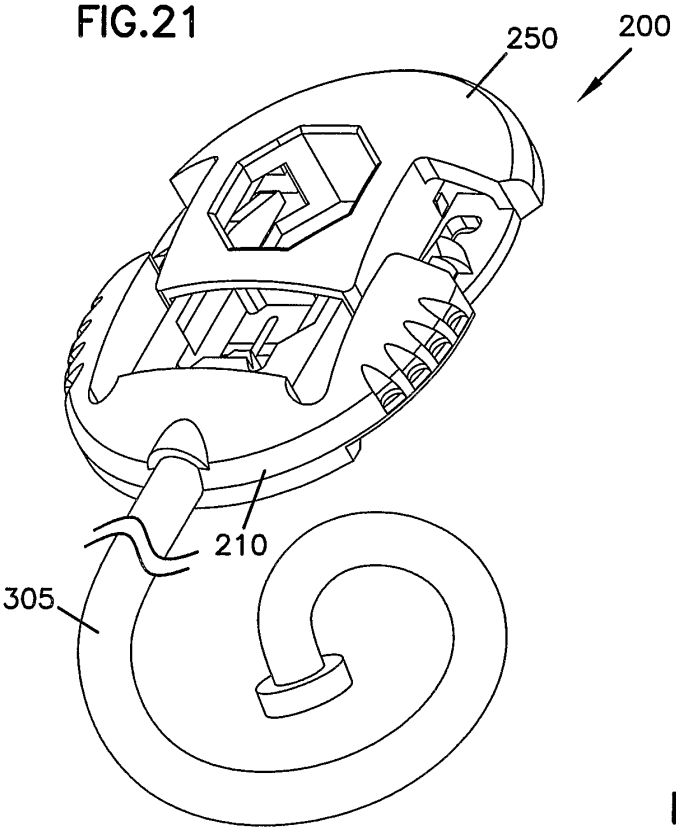

FIG.22

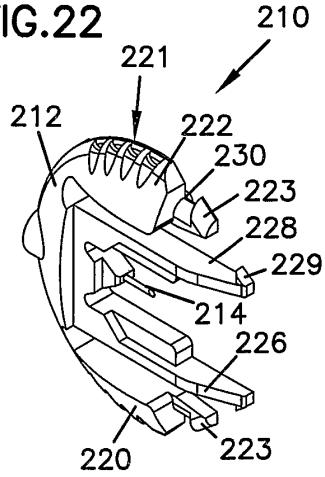

FIG.24

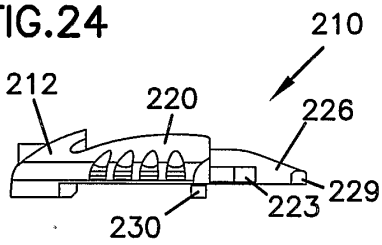

FIG.23

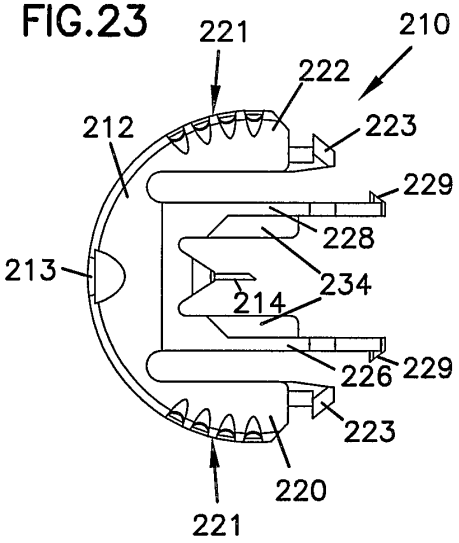

FIG.25

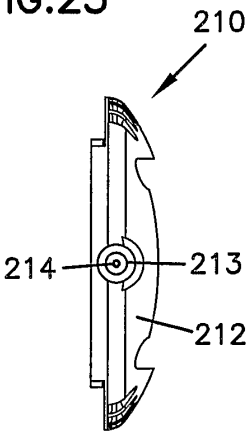

FIG.26

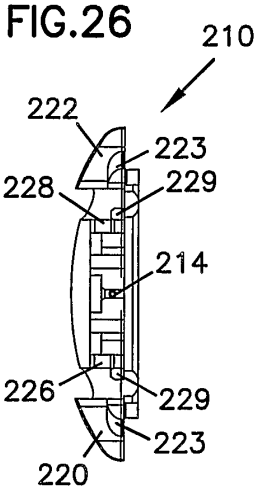

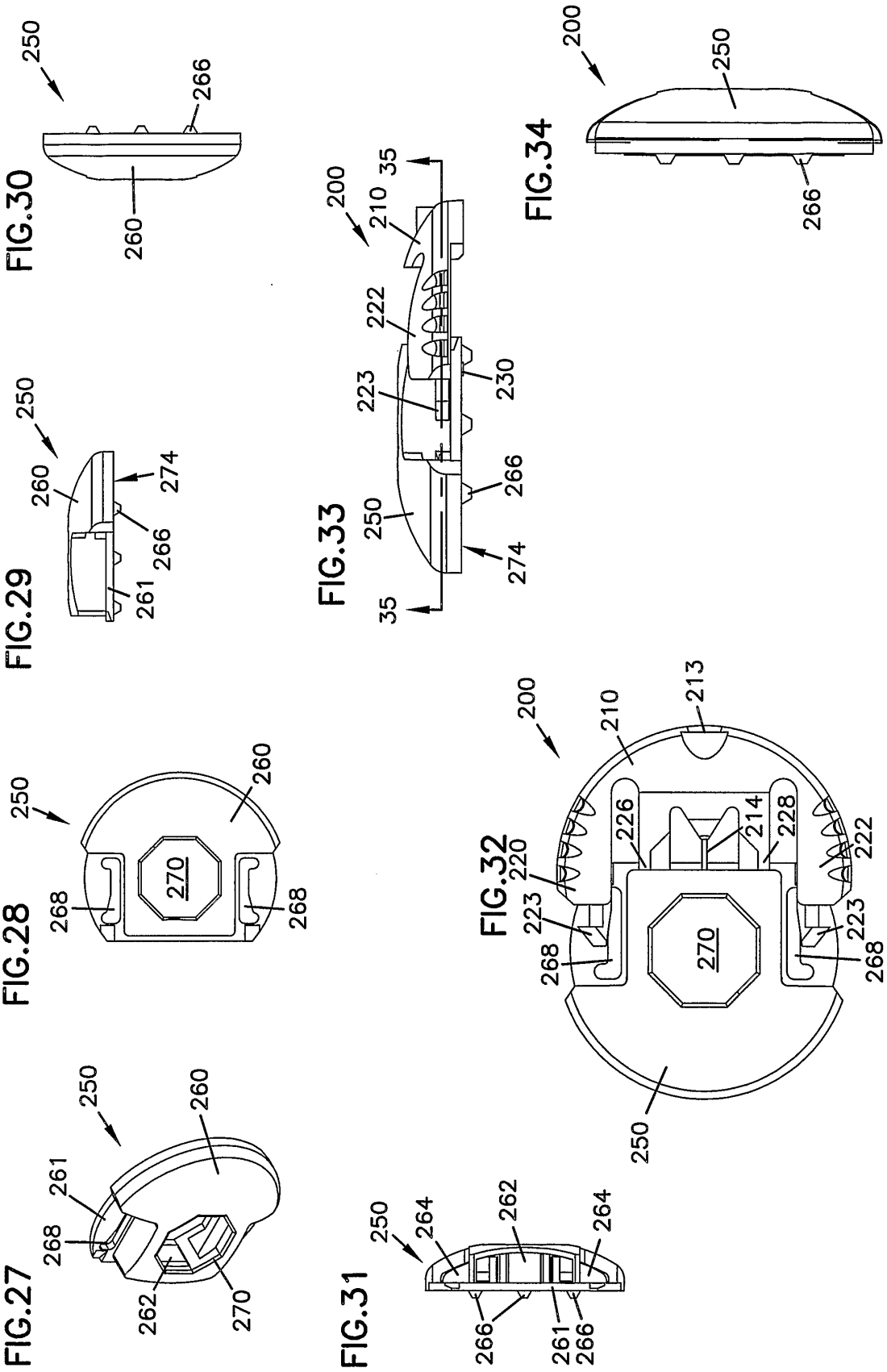
FIG.30
250
266
260
FIG.29
250
260
274
266
261
FIG.28
250
260
270
268
268
FIG.27
250
260
261
268
262
270
FIG.33
200
210
35
222
223
230
250
266
274
35
FIG.34
200
250
266
FIG.32
200
210
213
220
226
214
228
222
223
223
268
270
268
250
FIG.31
250
264
262
264
266
261
266

FIG.35

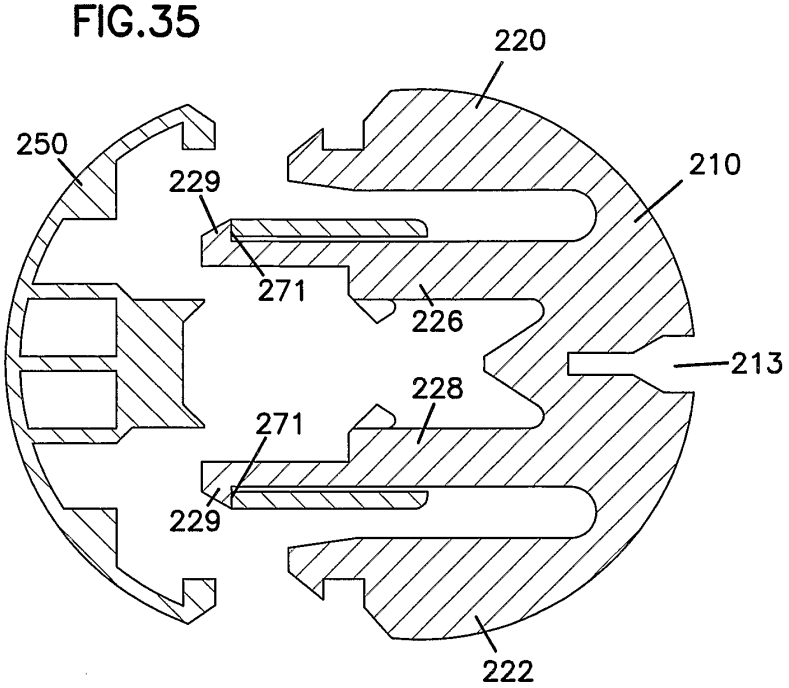

FIG.36

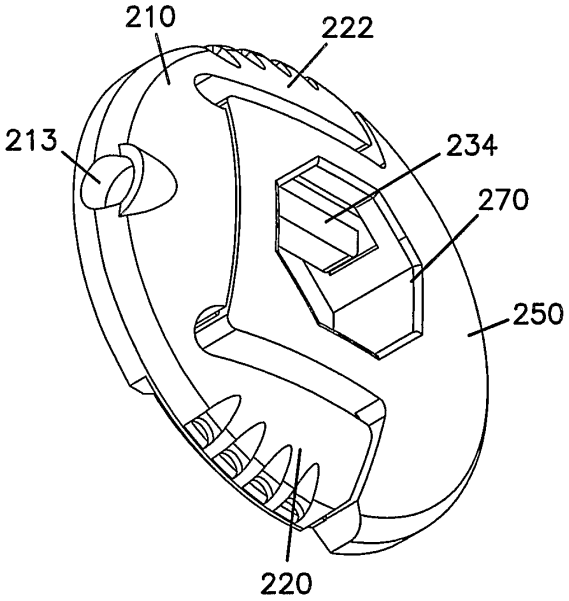

FIG.37

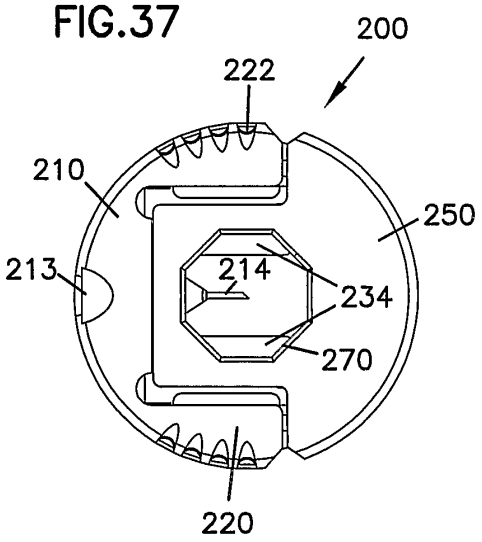

FIG.38

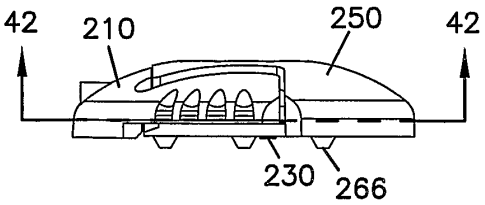

FIG.39

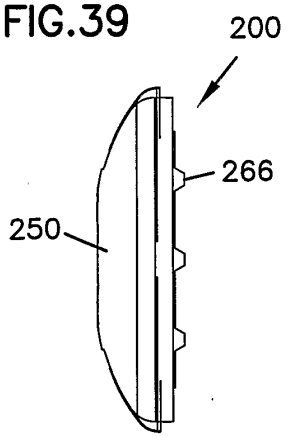

FIG.40

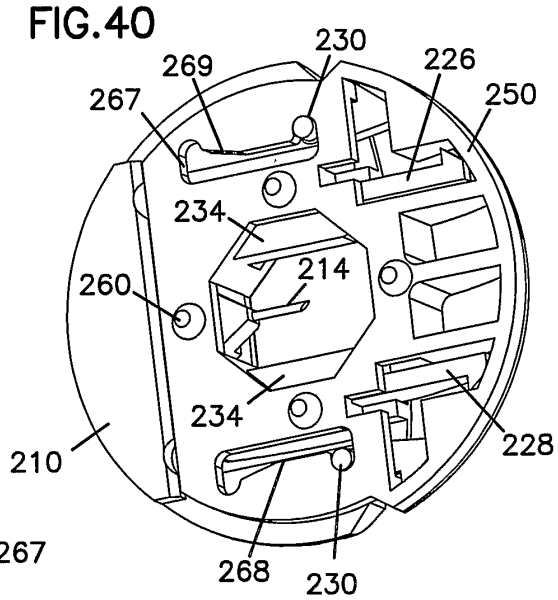

FIG.41

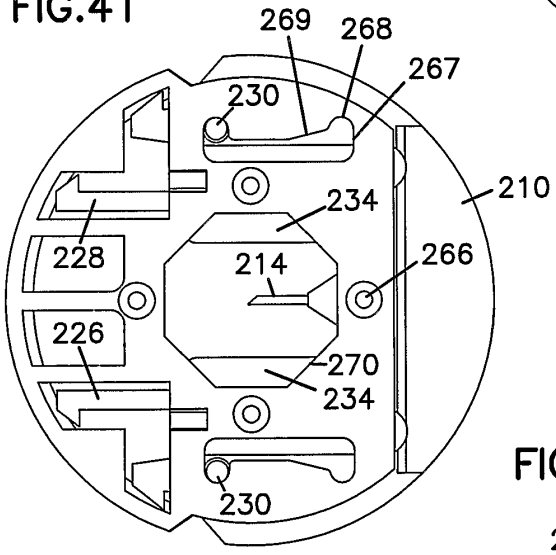

FIG.42

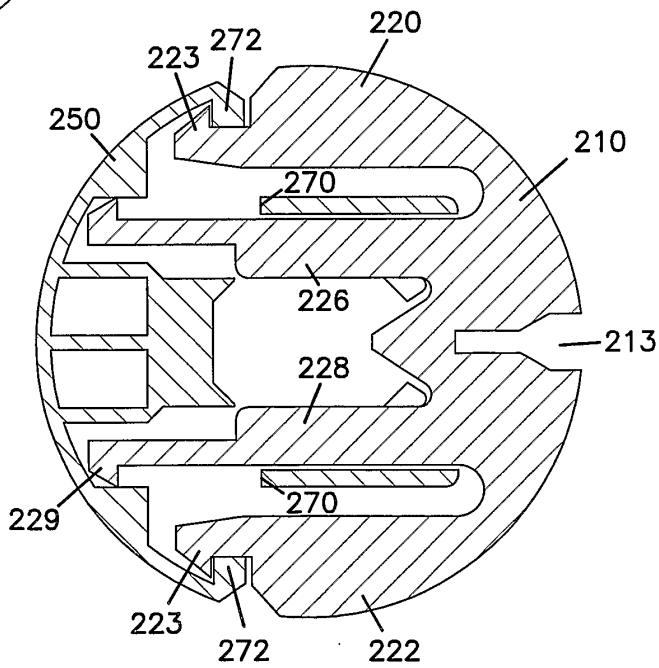

FIG.43

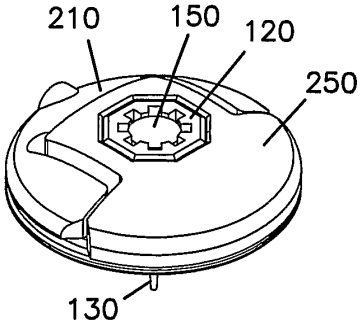

FIG.44

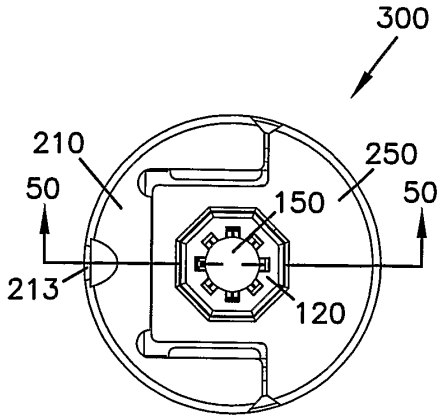

FIG.45

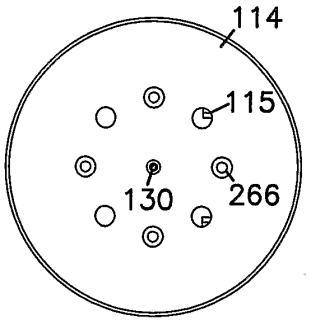

FIG.46

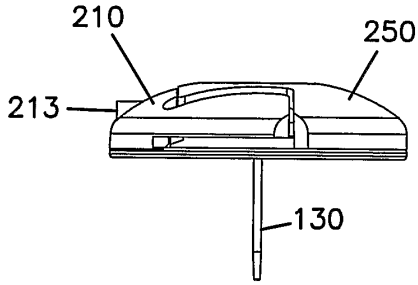

FIG.47

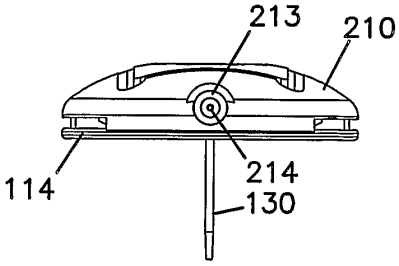

FIG.48

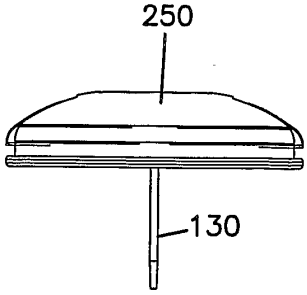

FIG.49

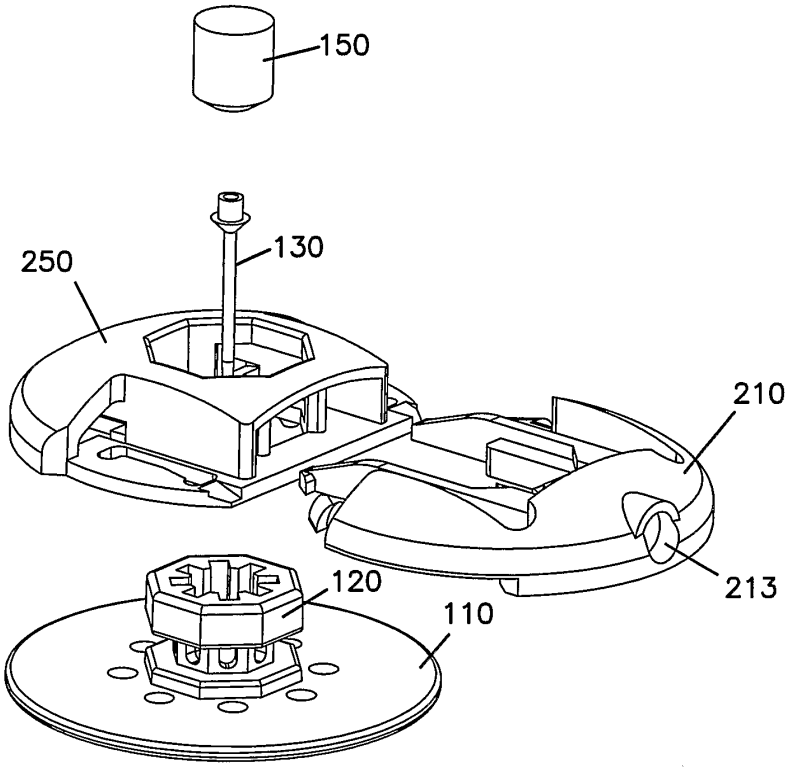
150
130
250
210
213
120
110

FIG.50

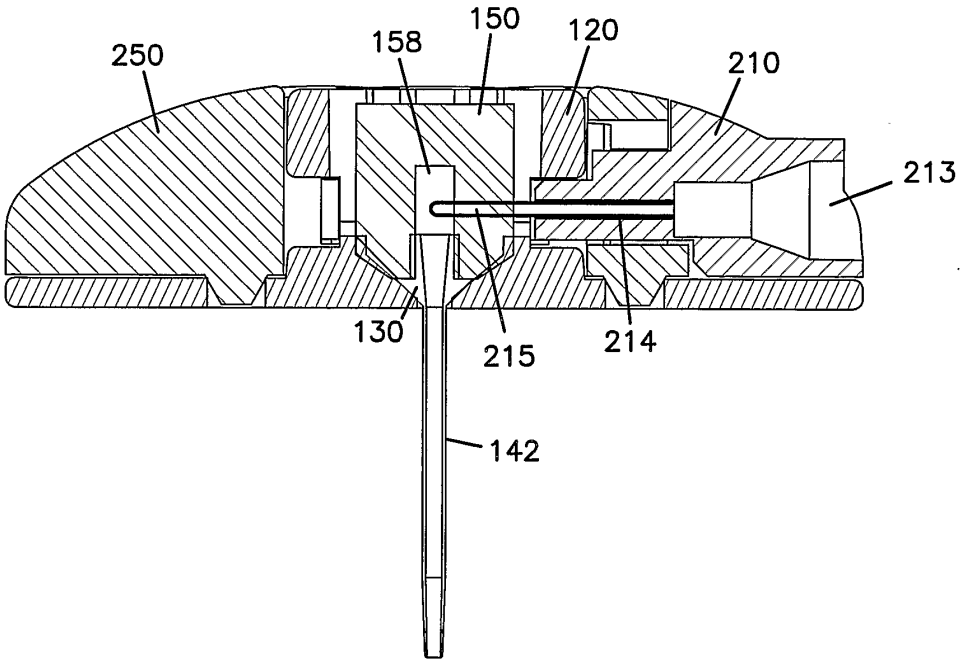
250
158
150
120
210
213
130
215
214
142

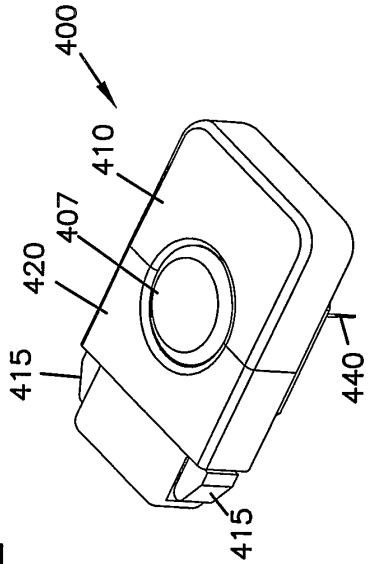

FIG.52

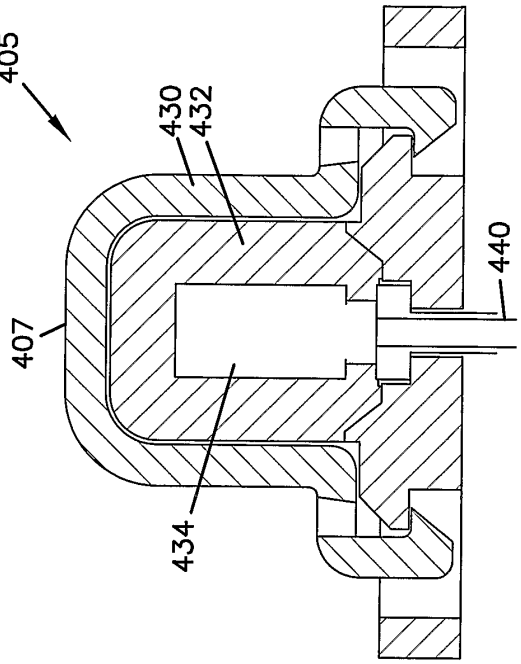

FIG.53

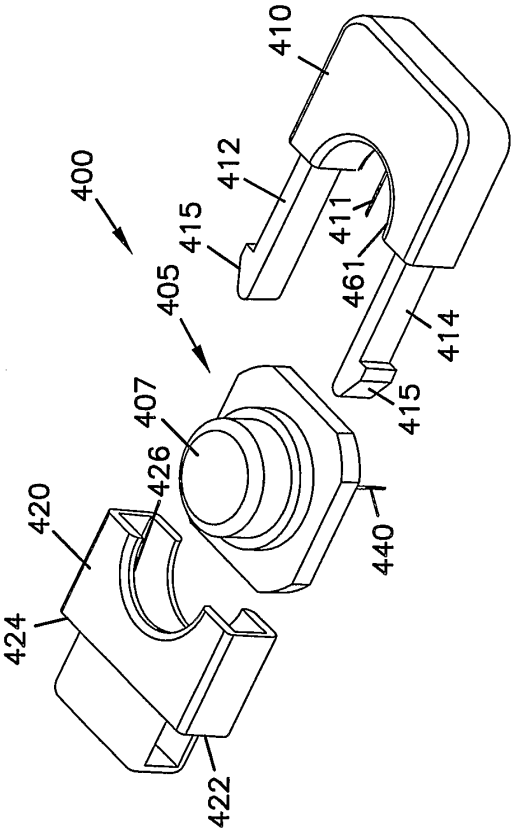

FIG.51

FIG.55

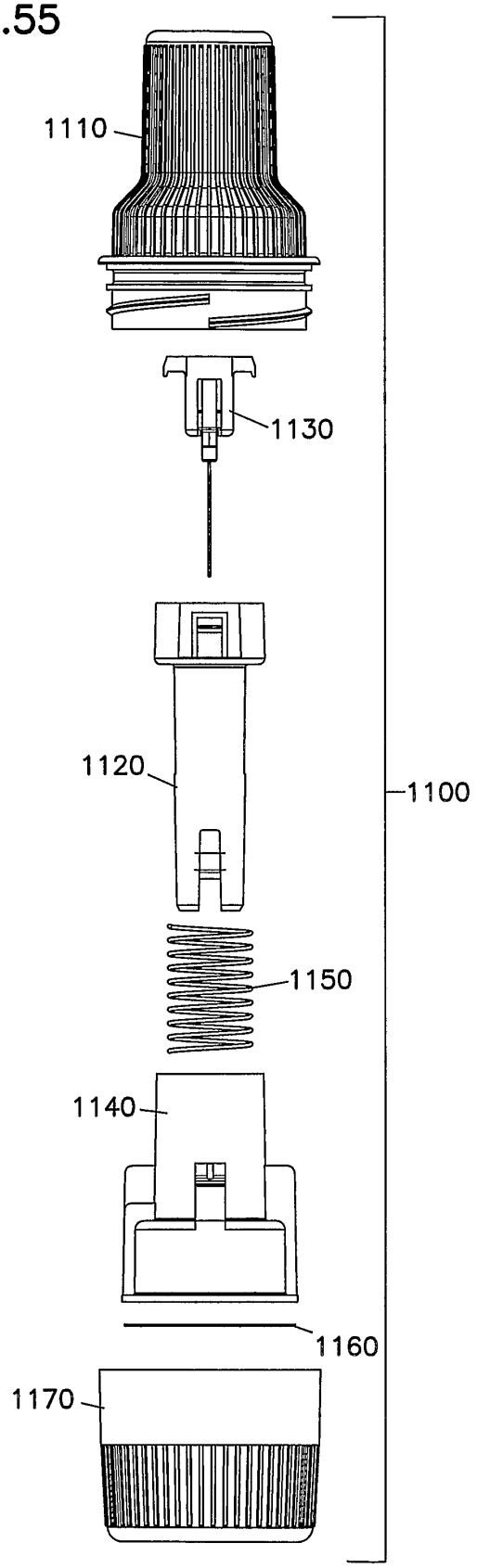
1110
1130
1120
1100
1150
1140
1160
1170

FIG.54

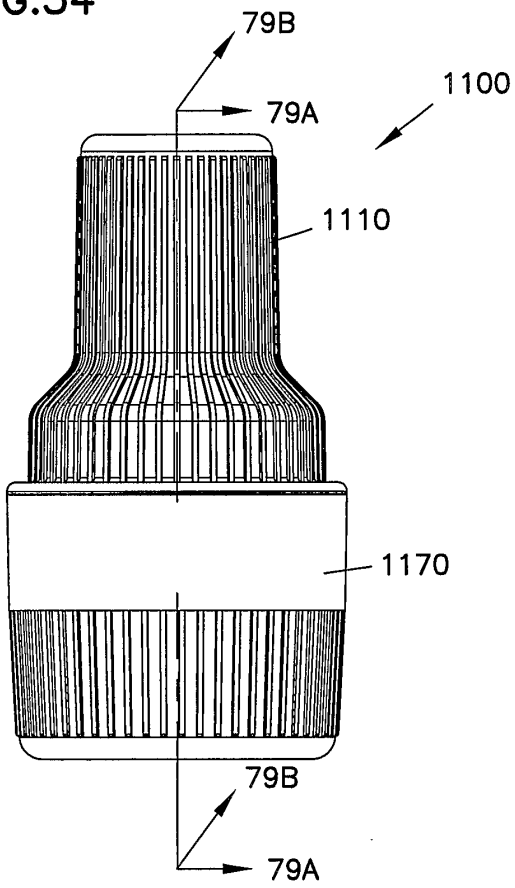
79B
79A
1100
1110
1170
79B
79A

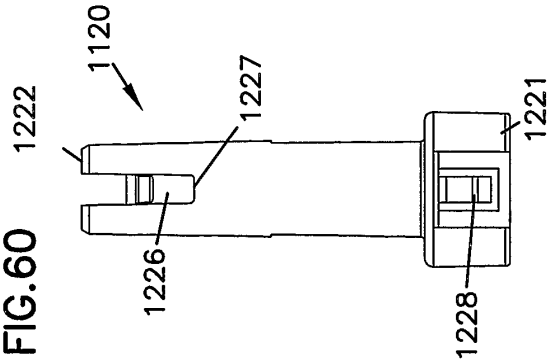

FIG.60

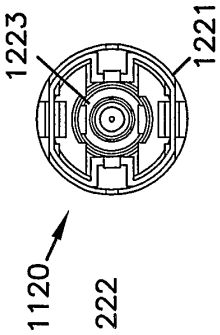

FIG.62

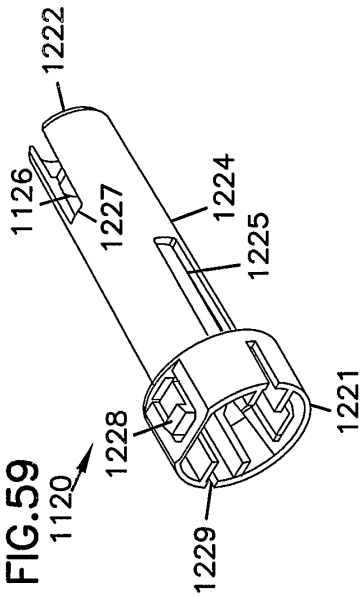

FIG.59

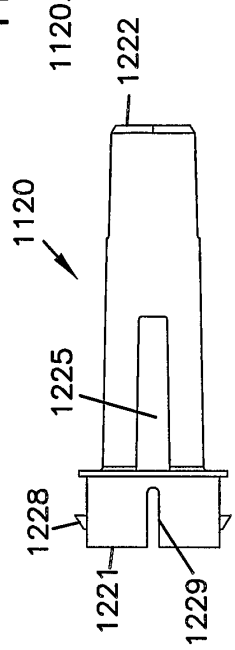

FIG.61

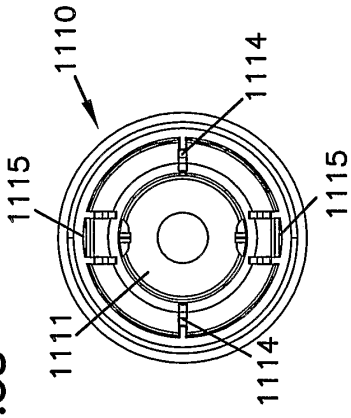

FIG.58

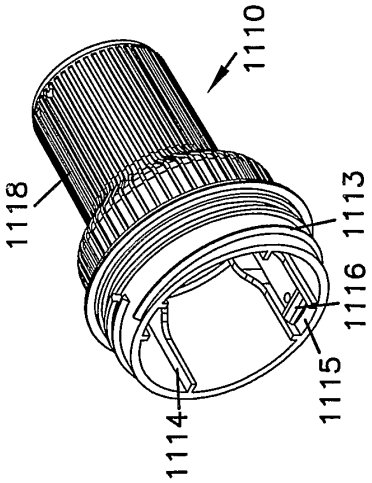

FIG.56

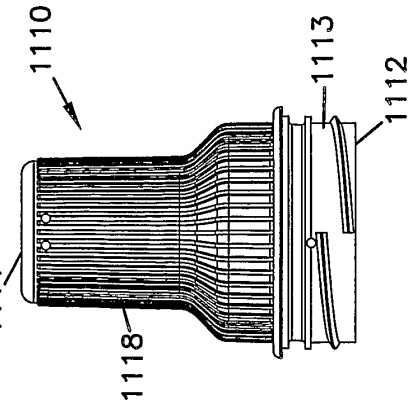

FIG.57

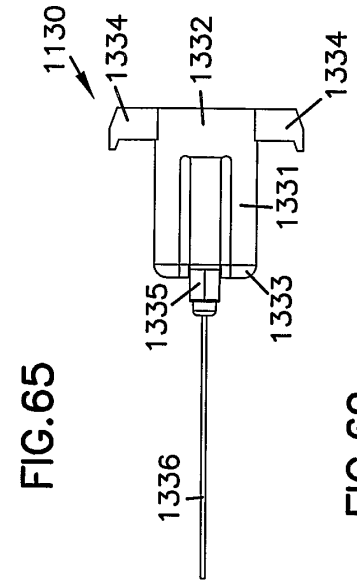

FIG.65

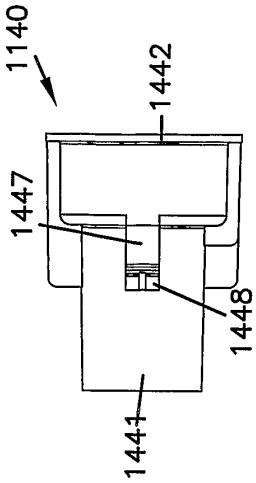

FIG.69

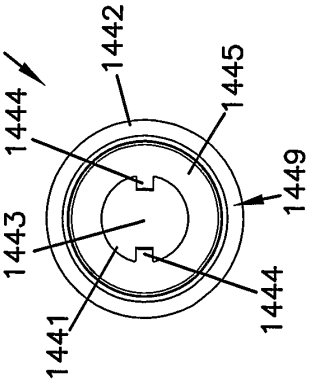

FIG.70

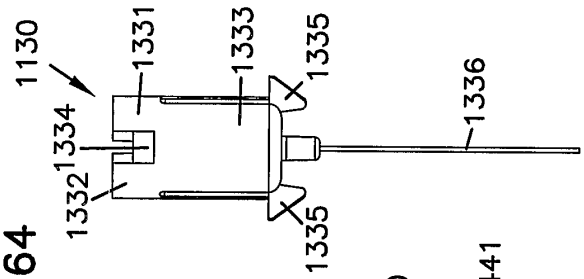

FIG.64

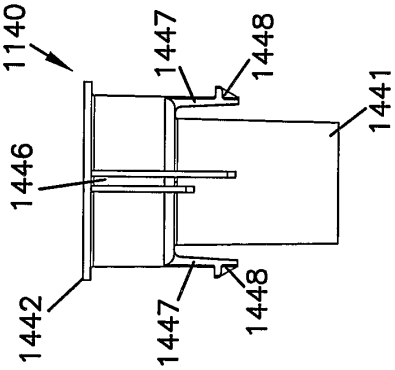

FIG.68

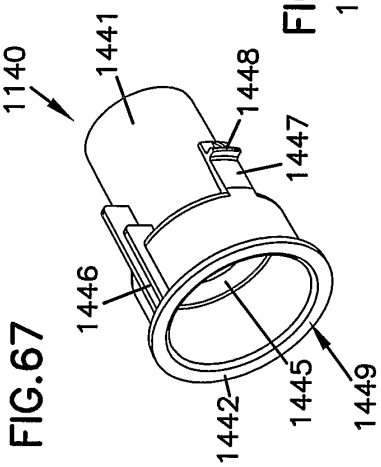

FIG.67

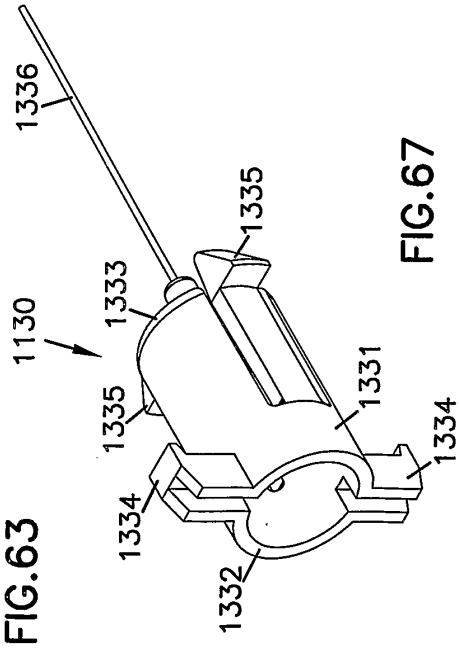

FIG.63

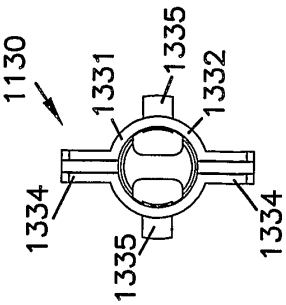

FIG.66

FIG.71

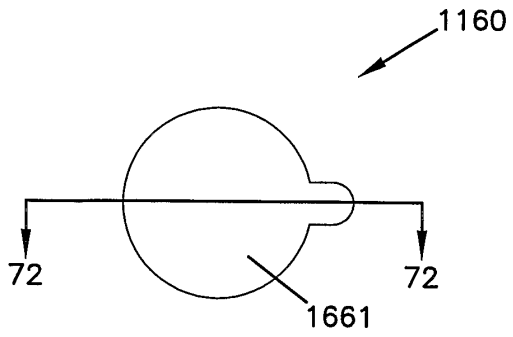

FIG.72

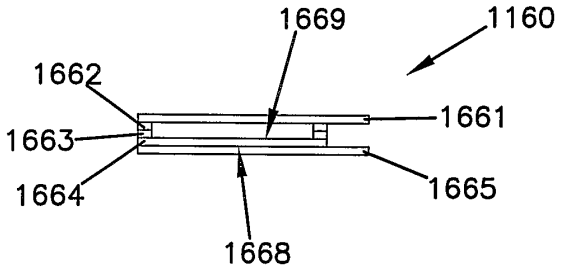

FIG.73

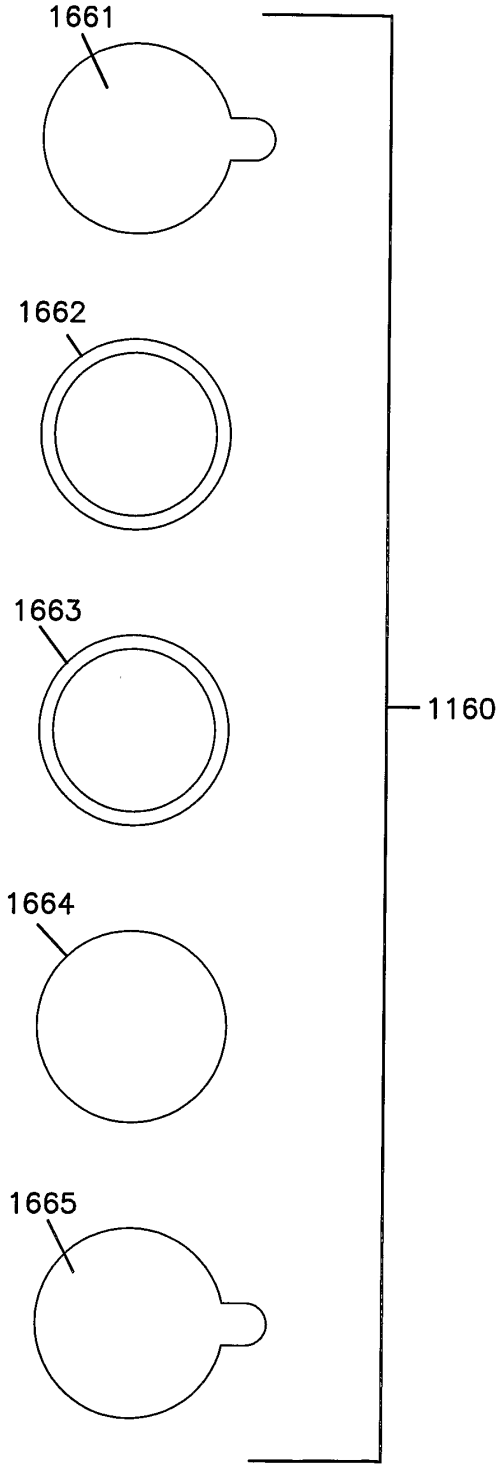

FIG.74

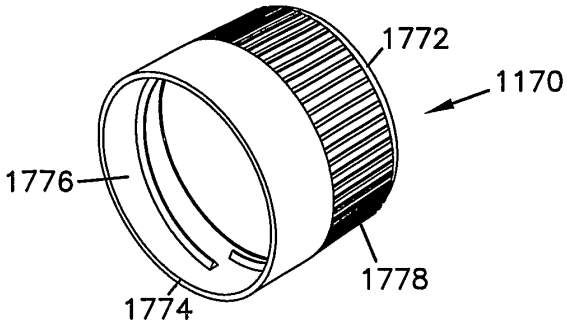

FIG.75

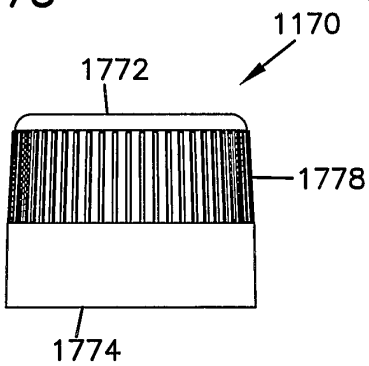

FIG.76

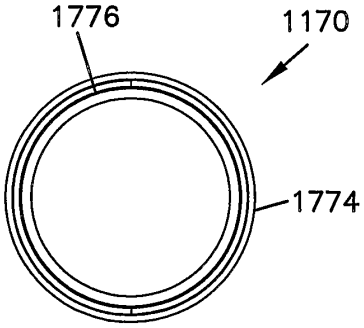

FIG.77

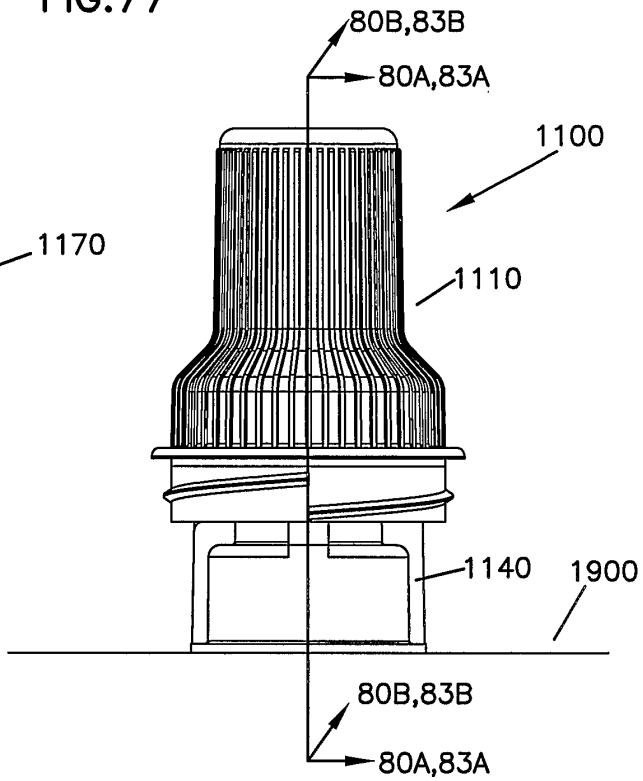

FIG.78

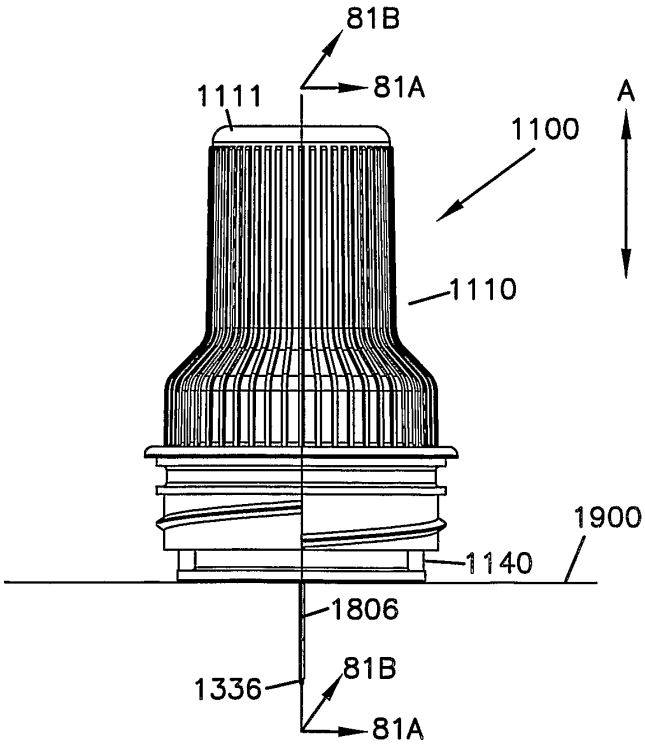

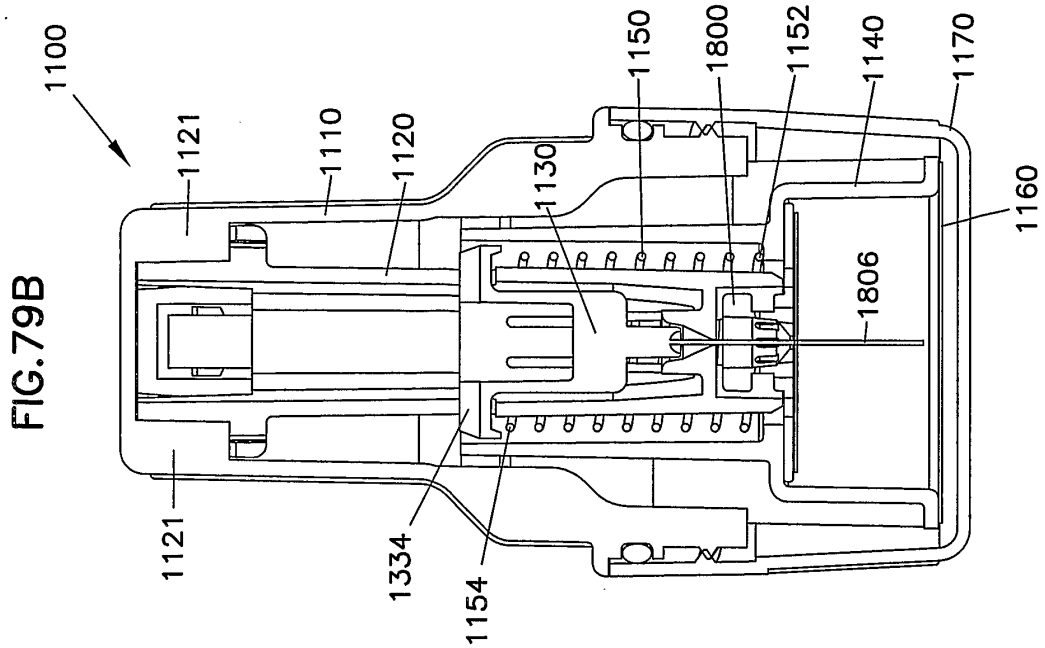

FIG.79B

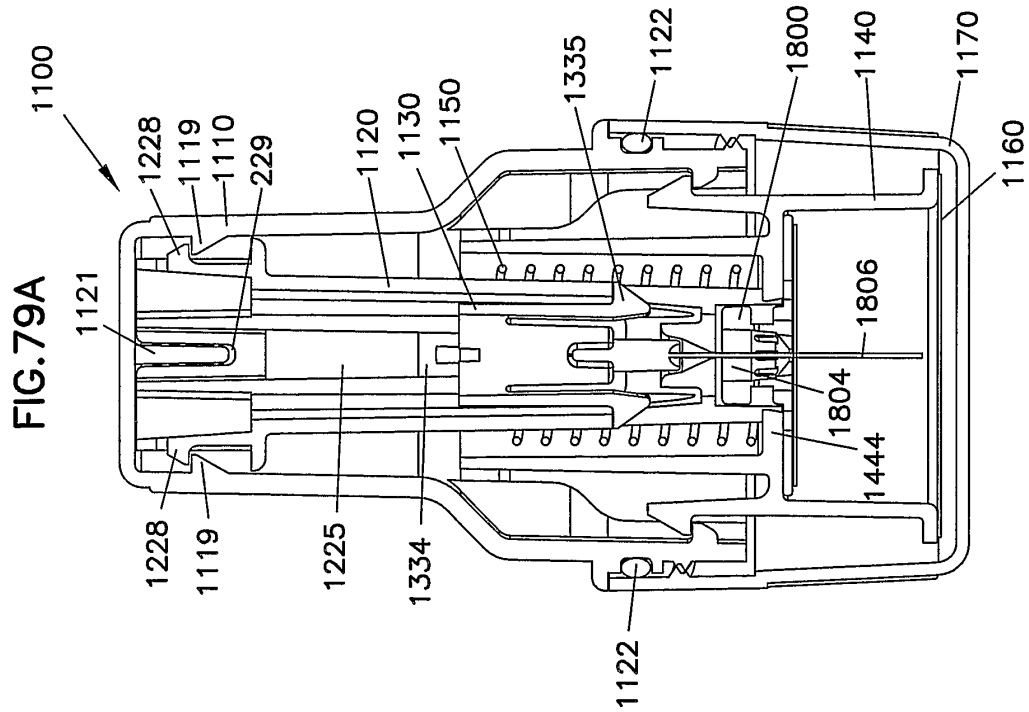

FIG.79A

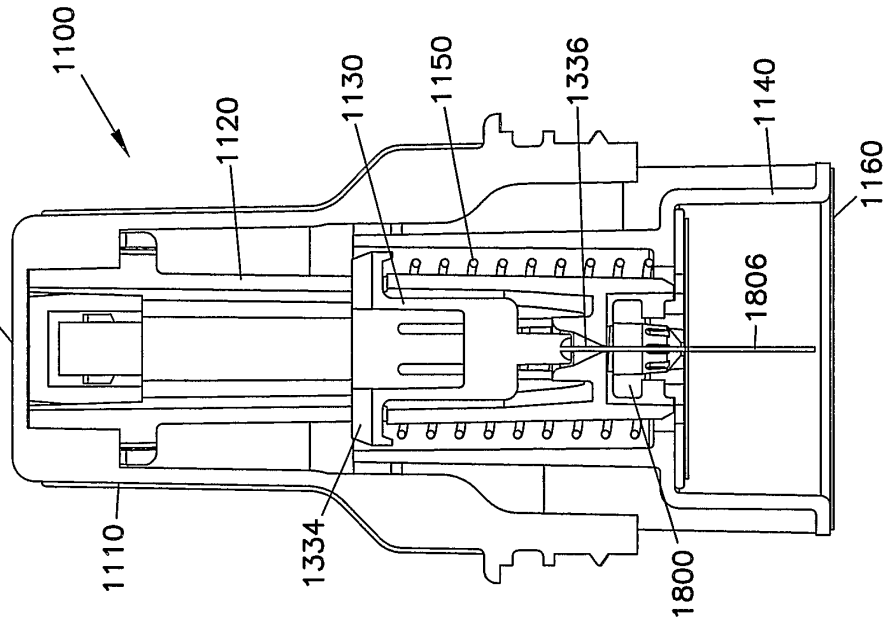

FIG.80B

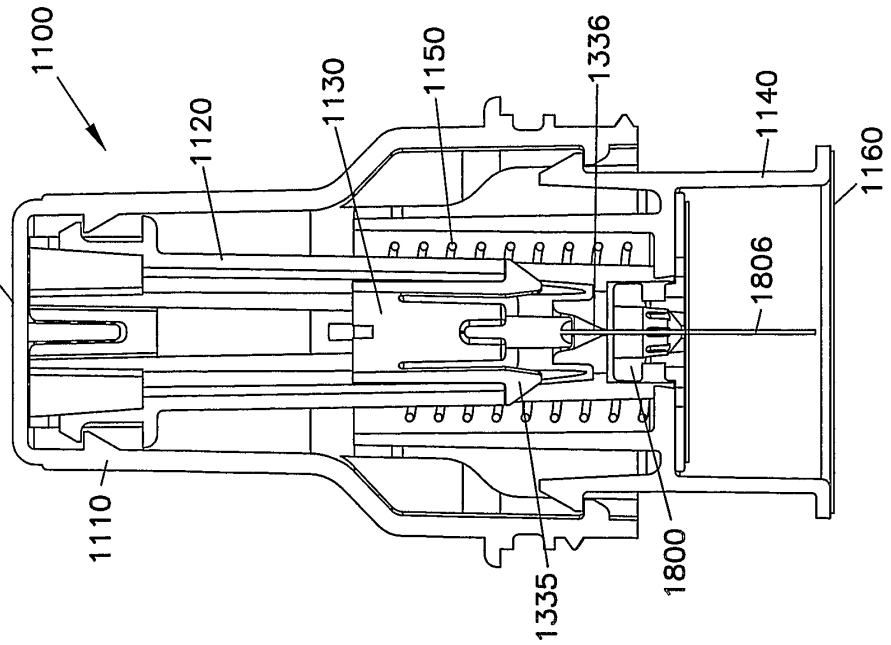

FIG. 80A

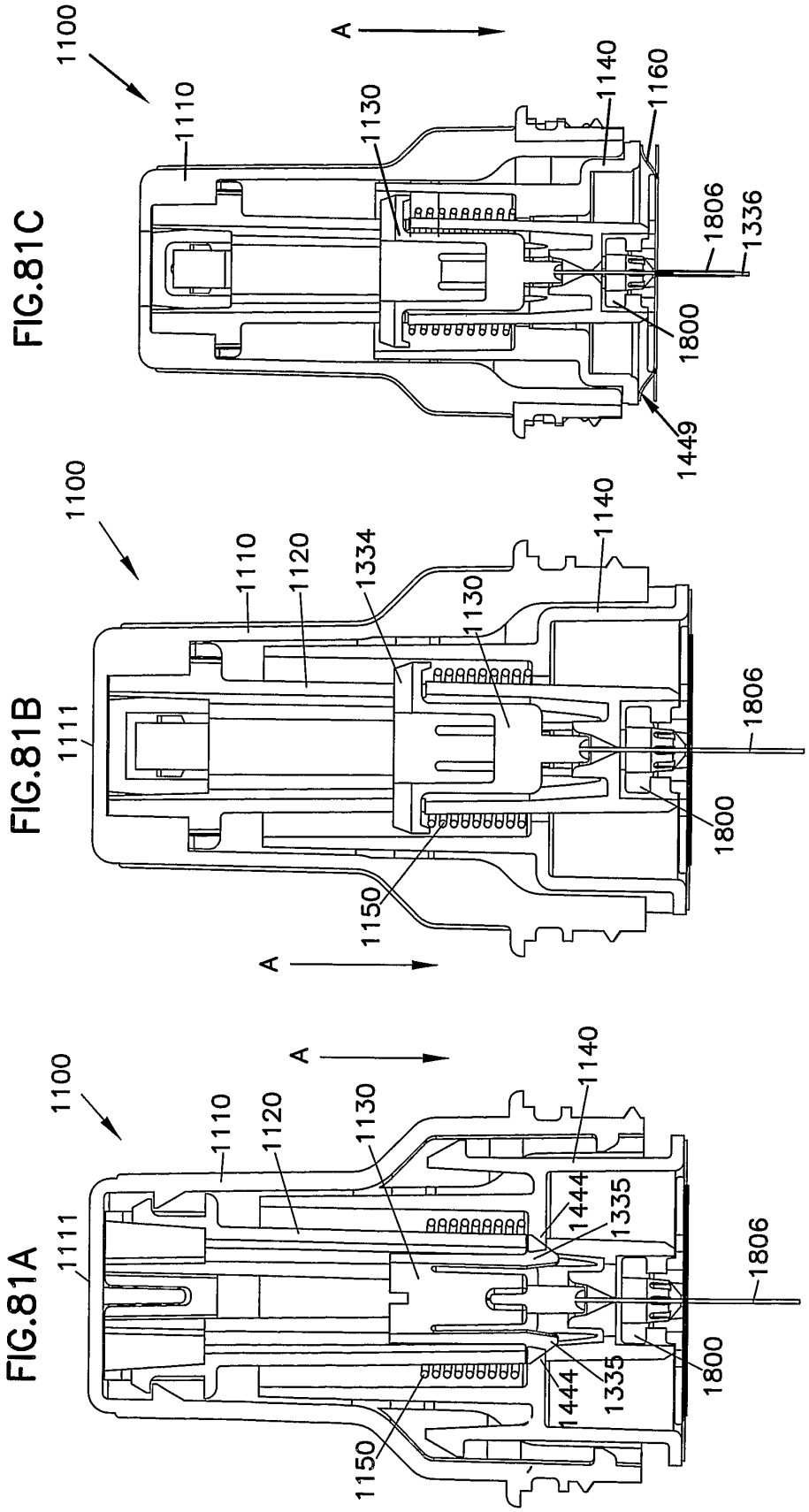
FIG.81A
FIG.81B
FIG.81C
1100
1110
1111
1120
1130
1140
1150
1160
1334
1335
1336
1444
1449
1800
1806
A

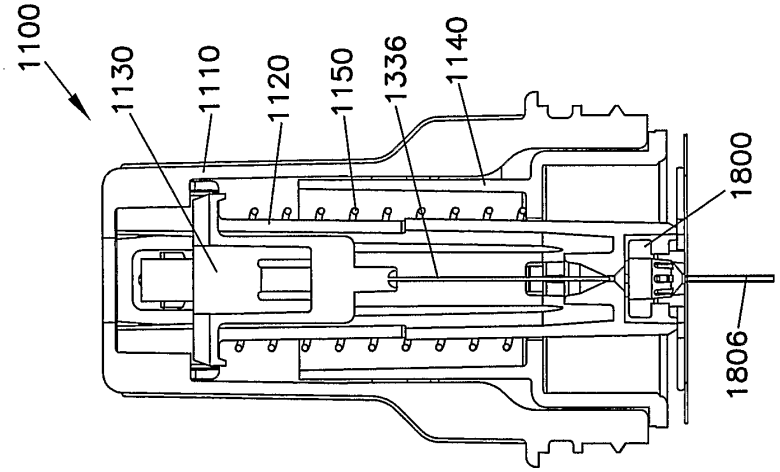

FIG.82B

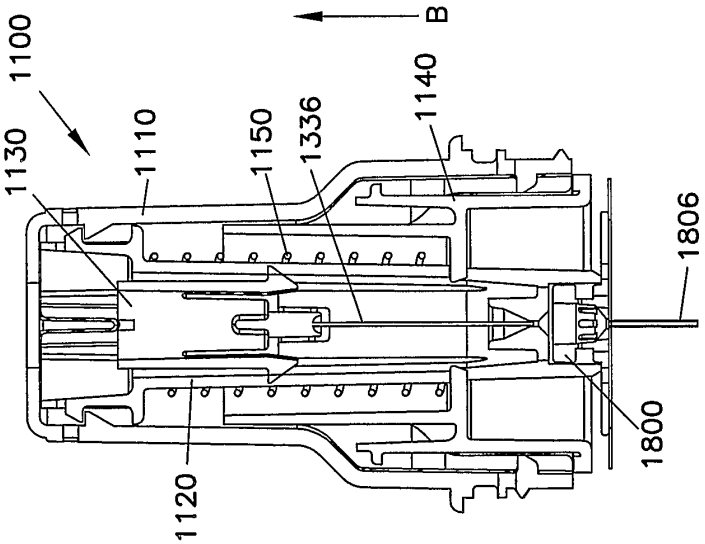

FIG.82A

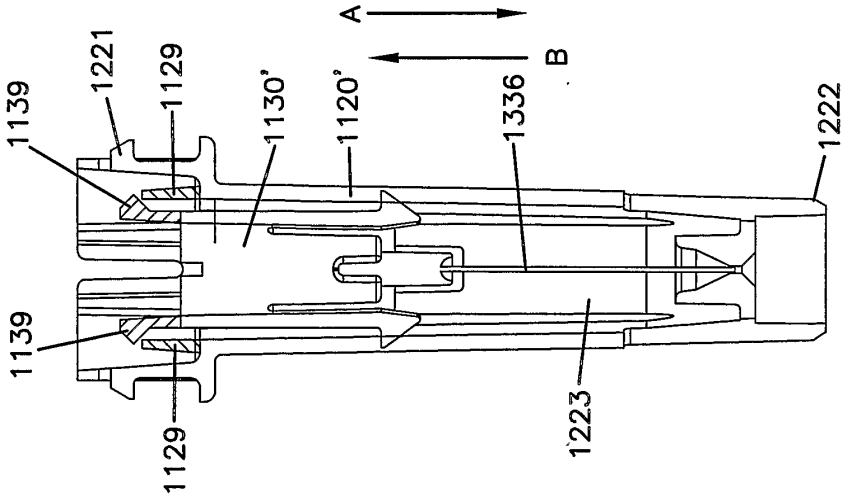

FIG.84

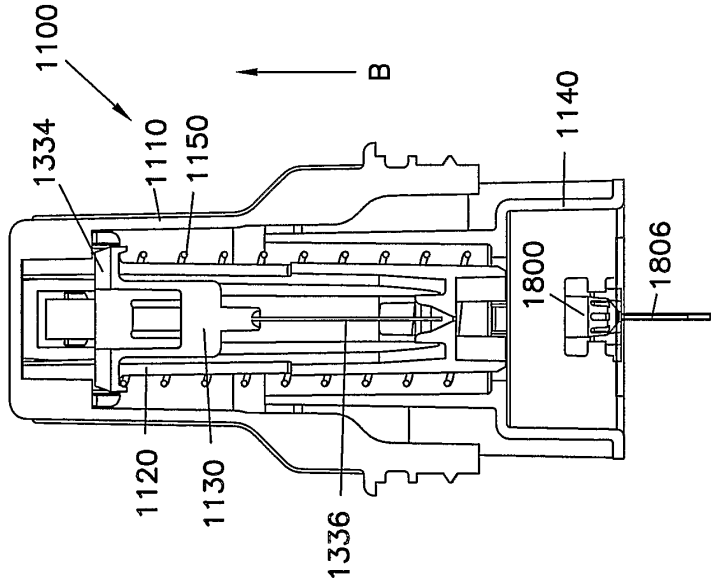

FIG.83B

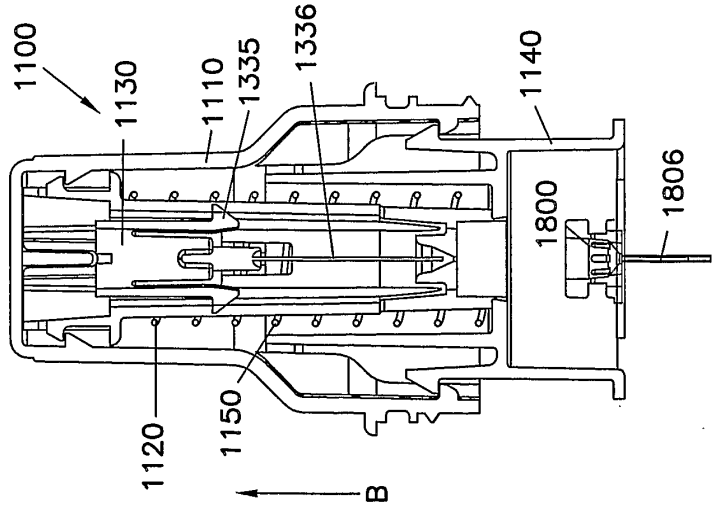

FIG.83A

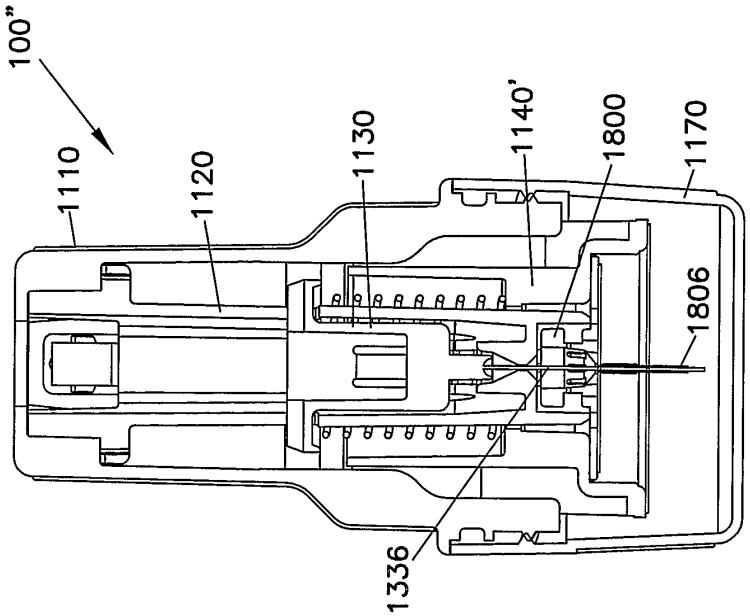

FIG.85B

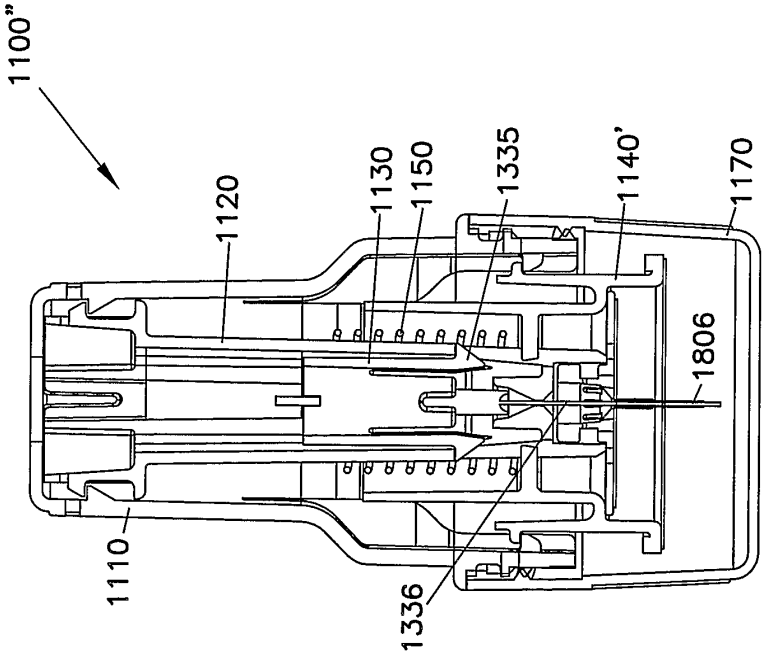

FIG.85A

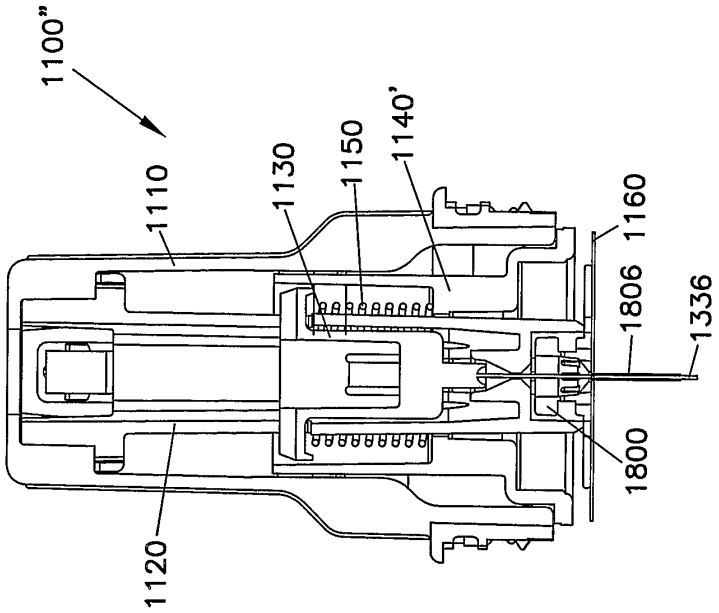

FIG.86B

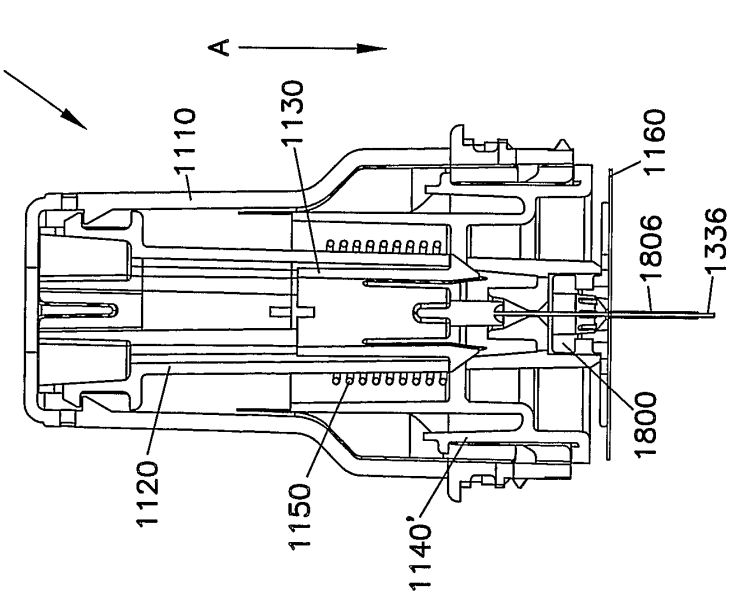

FIG.86A

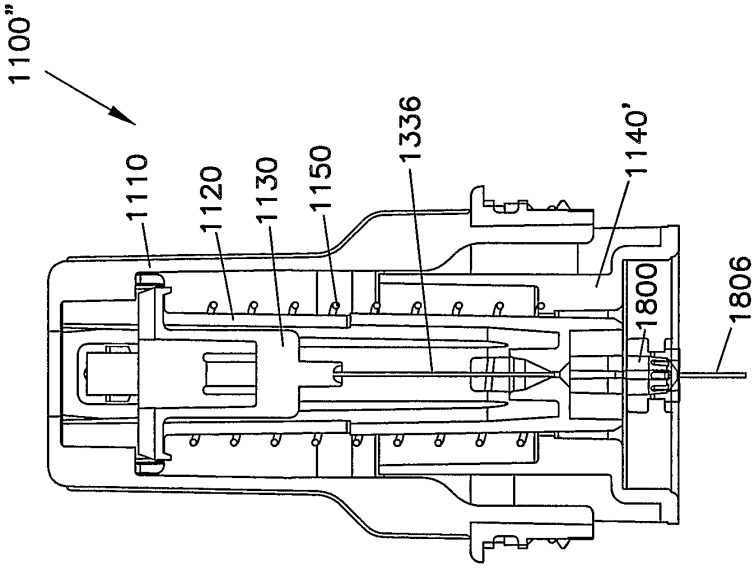

FIG.87B

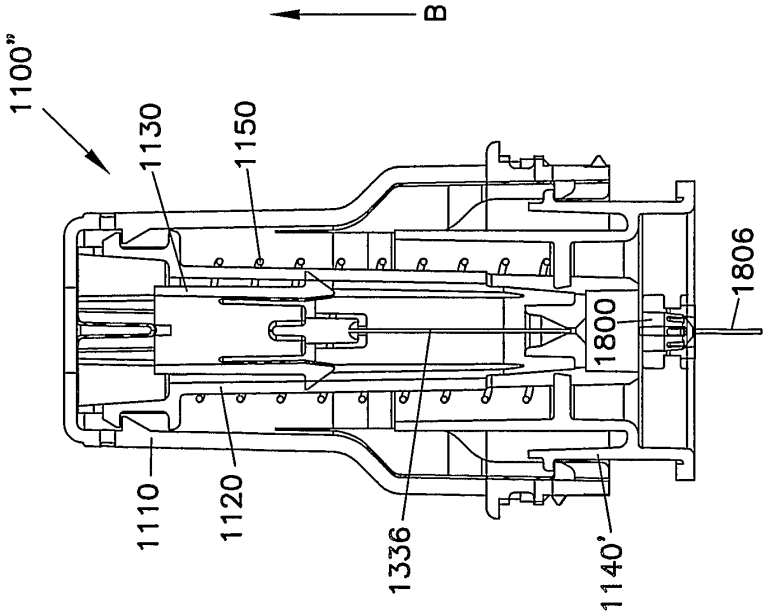

FIG.87A

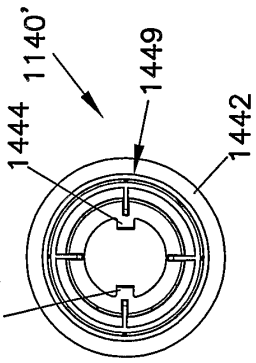

FIG.91

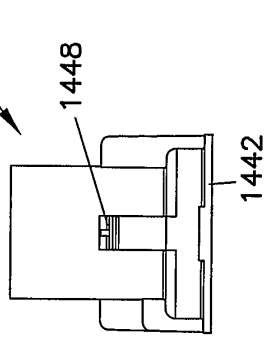

FIG.90

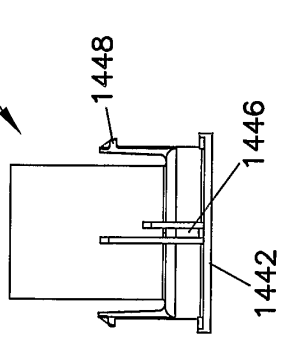

FIG.89

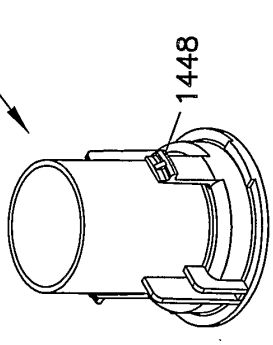

FIG.88

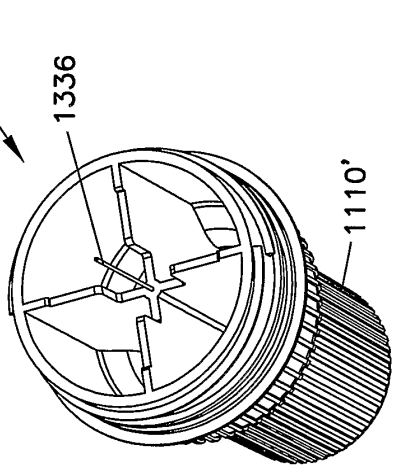

FIG.93

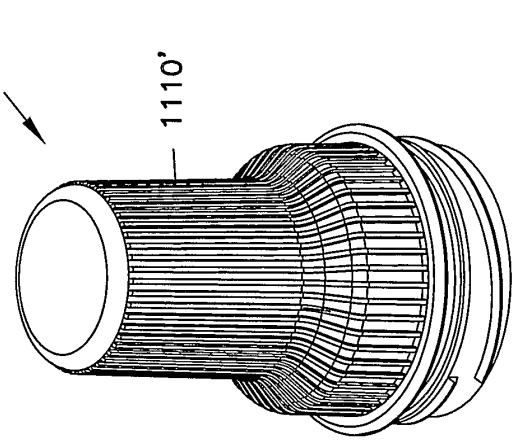

FIG.92

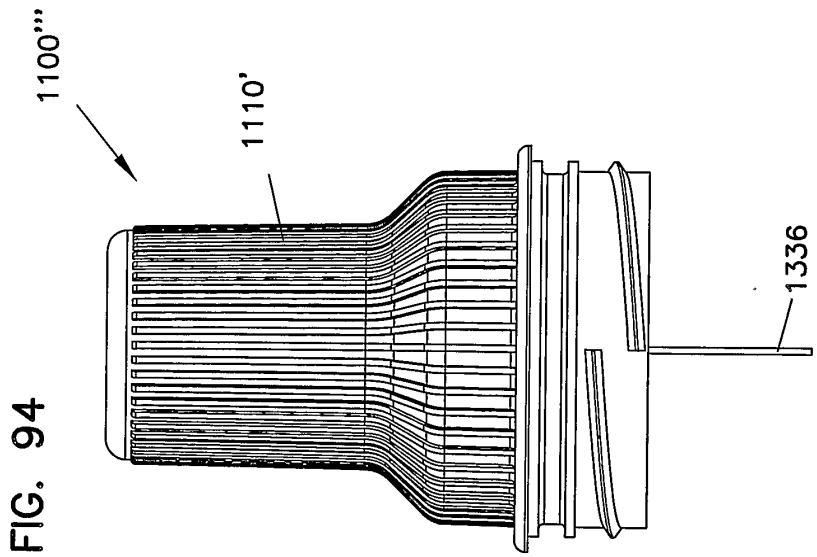

FIG. 94

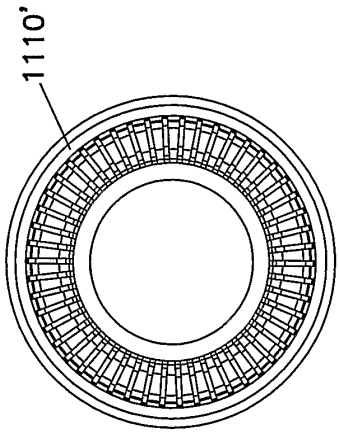

FIG.95
1100'''

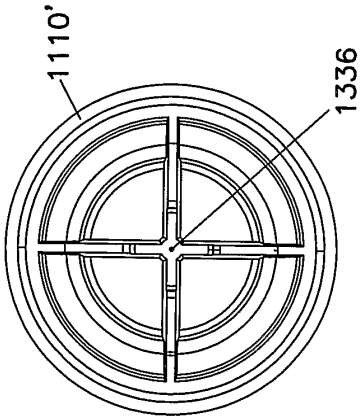

FIG.96

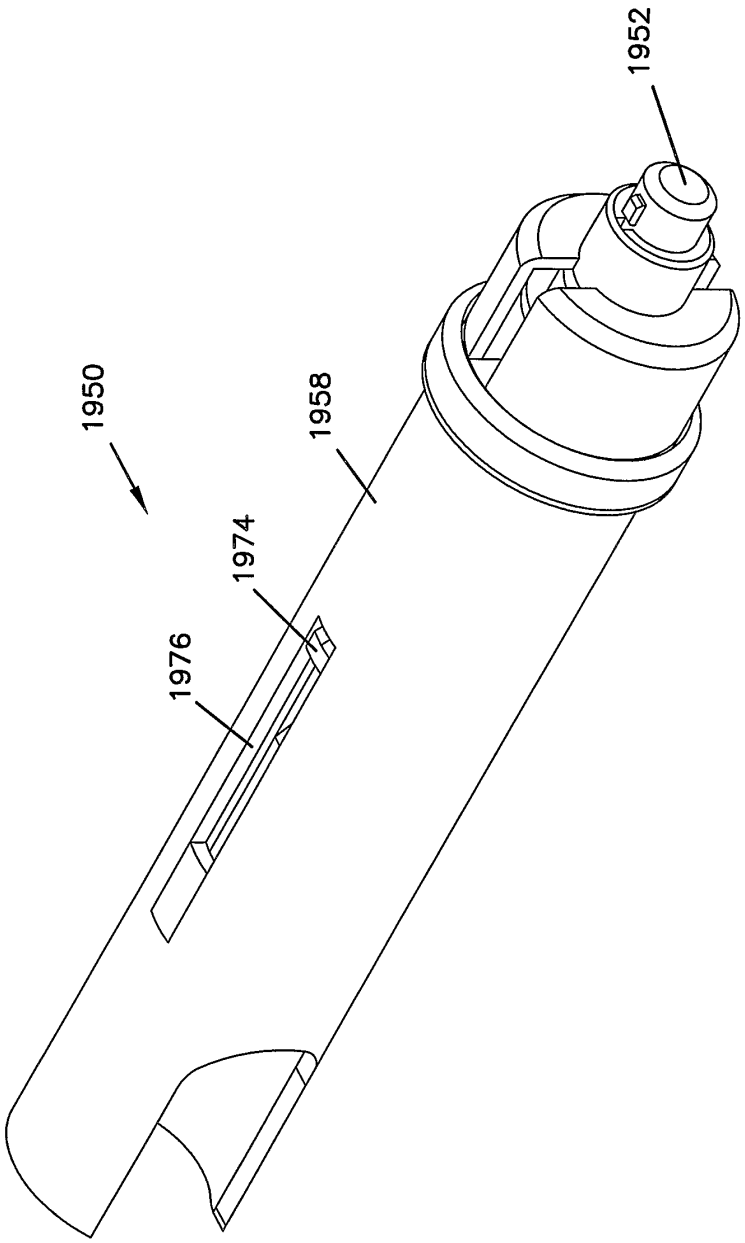

FIG.97

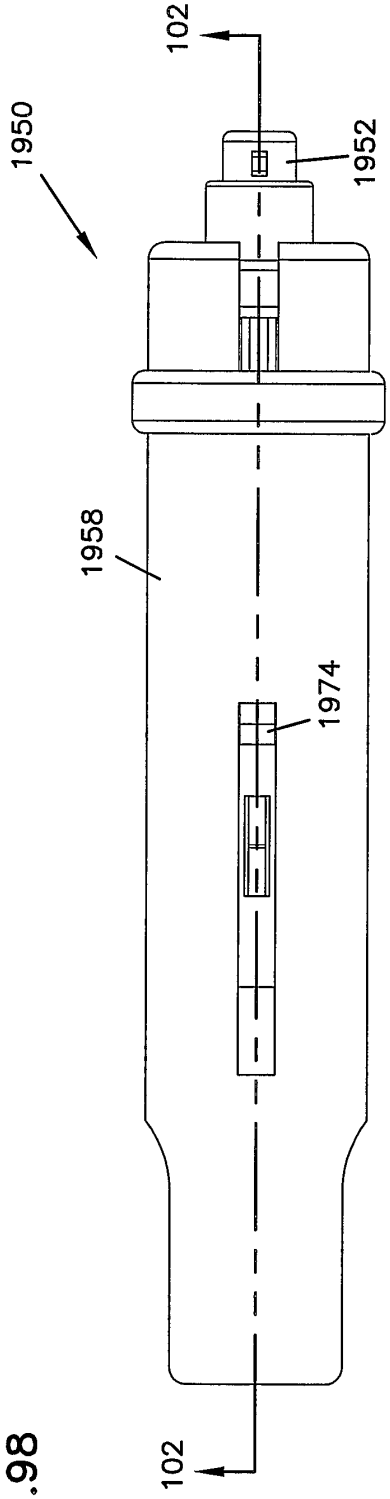

FIG.98

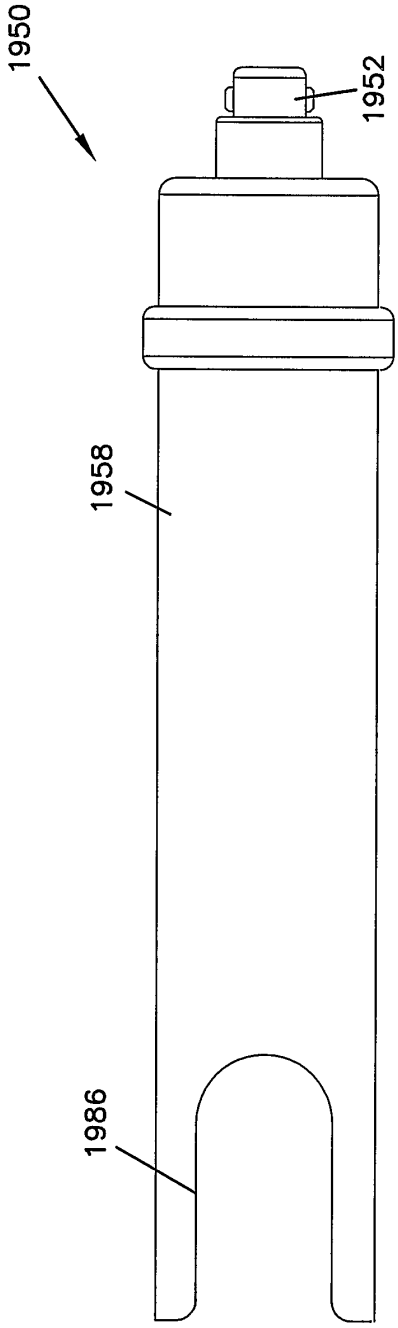

FIG.99

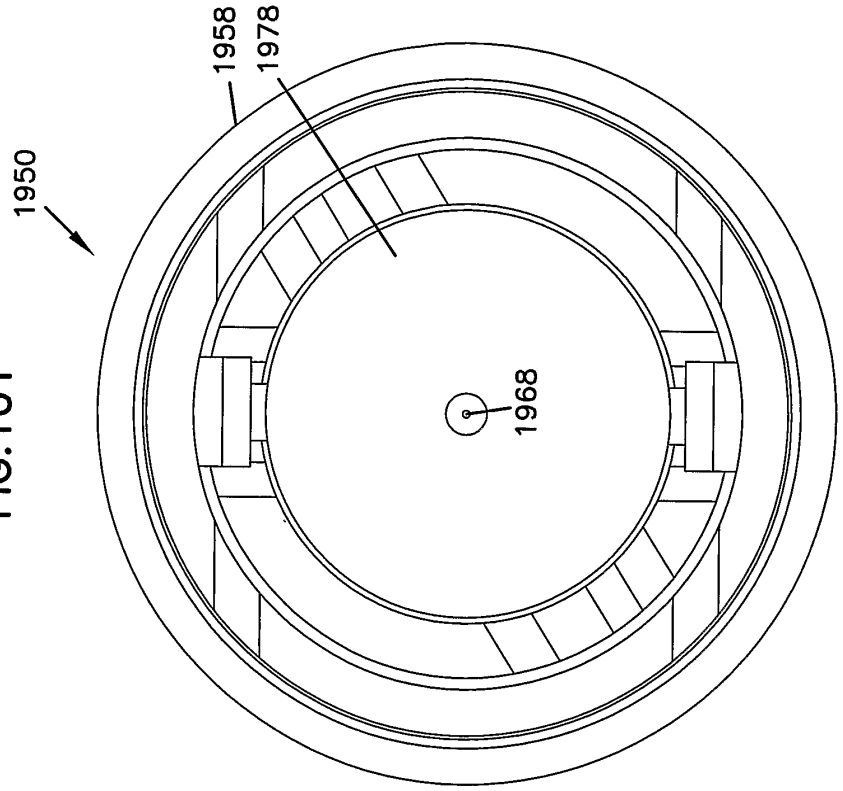

FIG.101

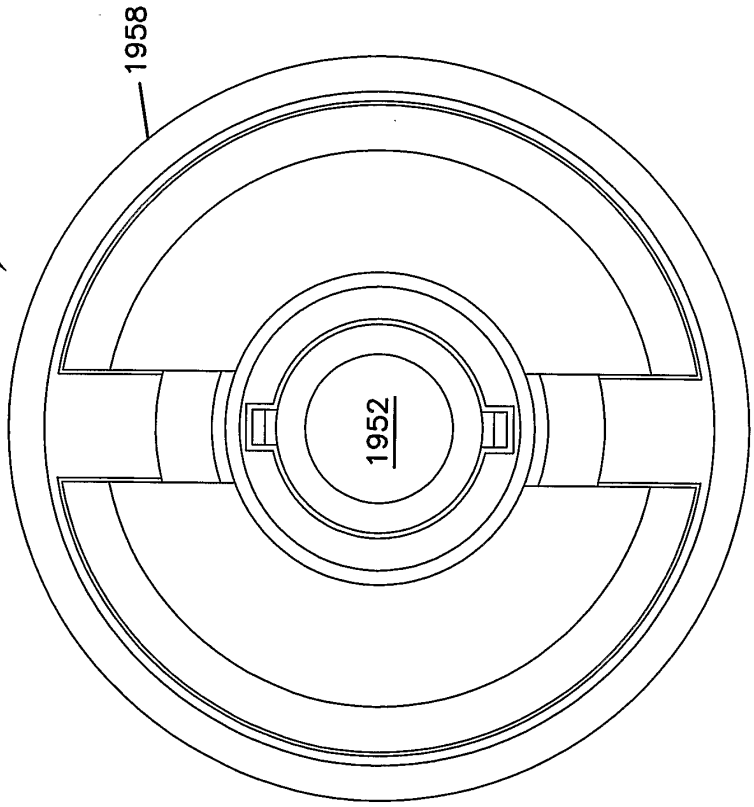

FIG.100

FIG.102

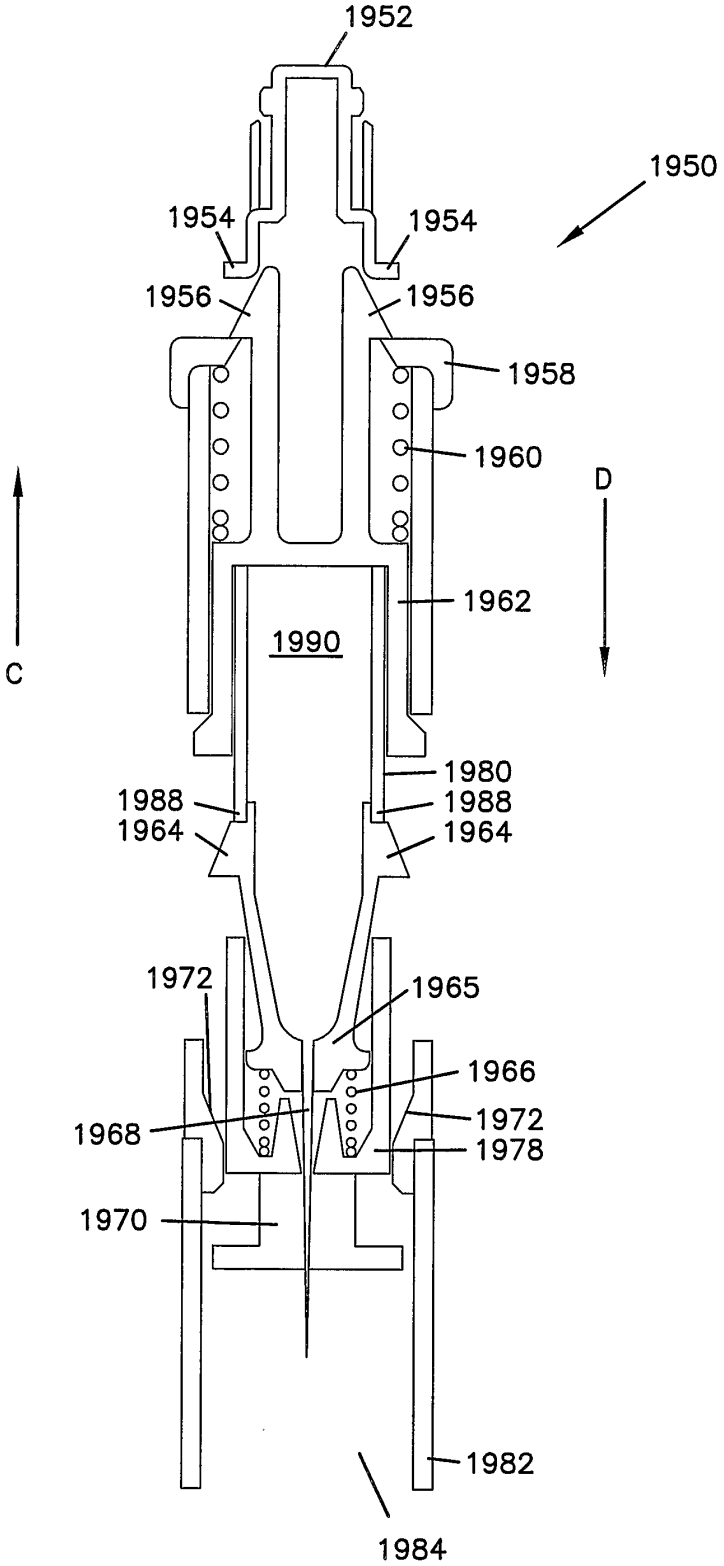
1952
1950
1954
1954
1956
1956
1958
1960
D
C
1962
1990
1980
1988
1988
1964
1964
1972
1965
1966
1968
1972
1978
1970
1982
1984

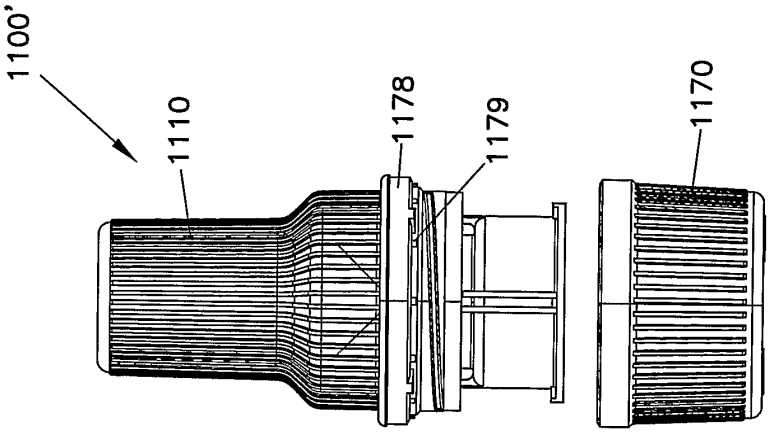

FIG.104

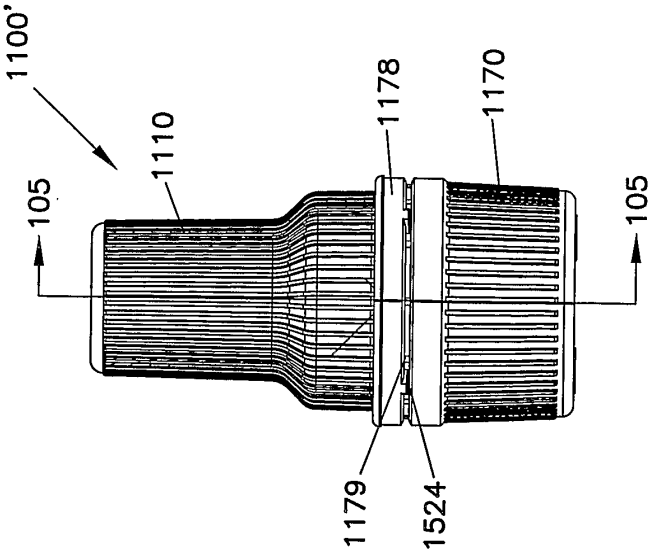

FIG.103

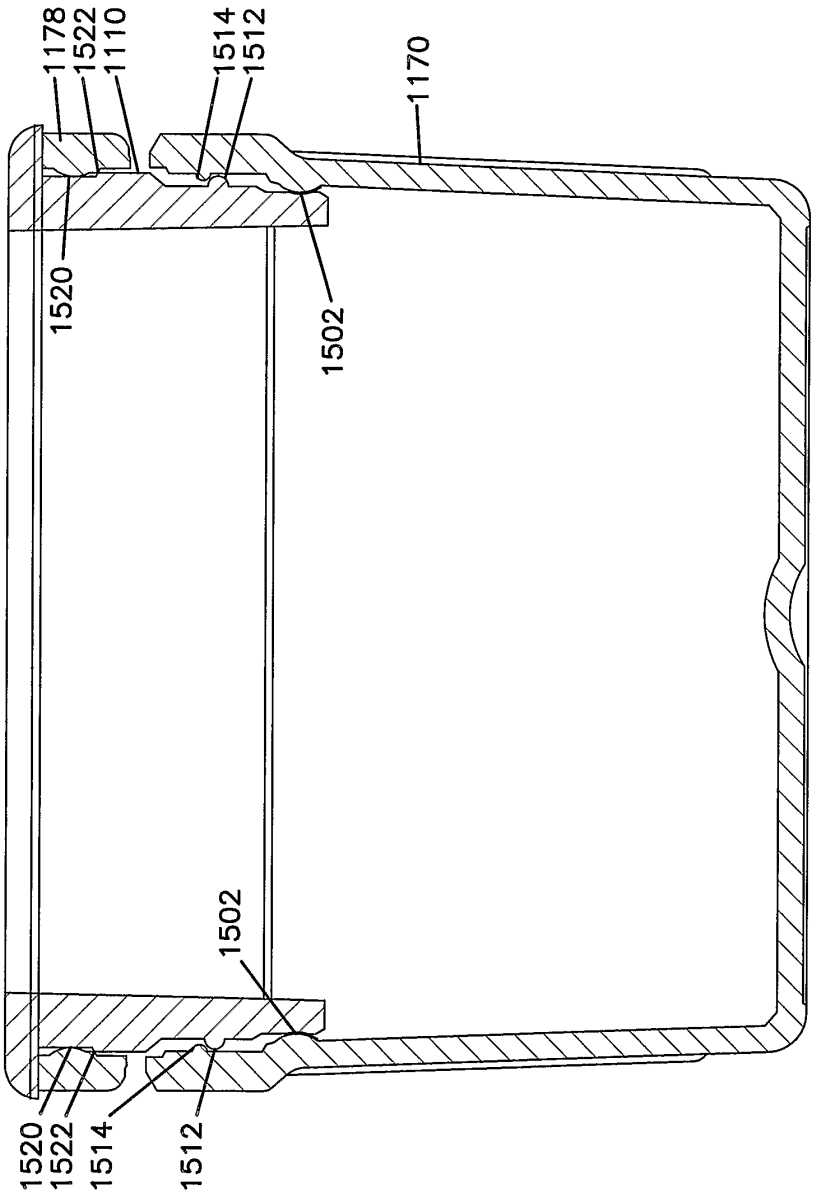
1178
1522
1110
1520
1514
1512
1502
1170
1502
1520
1522
1514
1512

FIG.105

INTERNATIONAL SEARCH REPORT

International Application No
PCT/US2004/030317

A. CLASSIFICATION OF SUBJECT MATTER
IPC 7 A61M25/06 A61M5/158

According to International Patent Classification (IPC) or to both national classification and IPC

B. FIELDS SEARCHED

Minimum documentation searched (classification system followed by classification symbols)
IPC 7 A61M

Documentation searched other than minimum documentation to the extent that such documents are included in the fields searched

Electronic data base consulted during the international search (name of data base and, where practical, search terms used)

EPO-Internal, WPI Data

C. DOCUMENTS CONSIDERED TO BE RELEVANT

Category °	Citation of document, with indication, where appropriate, of the relevant passages	Relevant to claim No.
X	US 5 545 143 A (FISCHELL ROBERT E ET AL) 13 August 1996 (1996-08-13)	10-14
A	column 5, line 36 - column 6, line 30; figures 1-19 column 13, line 24 - line 54	15
X	WO 02/081012 A (DISETRONIC LICENSING AG ; DENOTH PATRIK (CH); HUNN MARCEL (CH); LINIGE) 17 October 2002 (2002-10-17)	16-18,20
Y	page 16, paragraph 1 - page 21, paragraph 3; figures 1-3	19
Y	US 2001/053889 A1 (MARGGI ROLF ET AL) 20 December 2001 (2001-12-20) paragraph '0041!; figures 1-9	19

-/--

[X] Further documents are listed in the continuation of box C.

[X] Patent family members are listed in annex.

° Special categories of cited documents :

"A" document defining the general state of the art which is not considered to be of particular relevance
"E" earlier document but published on or after the international filing date
"L" document which may throw doubts on priority claim(s) or which is cited to establish the publication date of another citation or other special reason (as specified)
"O" document referring to an oral disclosure, use, exhibition or other means
"P" document published prior to the international filing date but later than the priority date claimed

"T" later document published after the international filing date or priority date and not in conflict with the application but cited to understand the principle or theory underlying the invention
"X" document of particular relevance; the claimed invention cannot be considered novel or cannot be considered to involve an inventive step when the document is taken alone
"Y" document of particular relevance; the claimed invention cannot be considered to involve an inventive step when the document is combined with one or more other such documents, such combination being obvious to a person skilled in the art.
"&" document member of the same patent family

Date of the actual completion of the international search	Date of mailing of the international search report
18 January 2005	26/01/2005

Name and mailing address of the ISA	Authorized officer
European Patent Office, P.B. 5818 Patentlaan 2 NL – 2280 HV Rijswijk Tel. (+31–70) 340–2040, Tx. 31 651 epo nl, Fax: (+31–70) 340–3016	Reinbold, S

4

Form PCT/ISA/210 (second sheet) (January 2004)

ABBOTT Exhibit 2001
Page 74 of 77
Dexcom, Inc. v. Abbott Diabetes Care Inc.
IPR2023-01409

INTERNATIONAL SEARCH REPORT

ational Application No
/US2004/030317

C.(Continuation) DOCUMENTS CONSIDERED TO BE RELEVANT

Category °	Citation of document, with indication, where appropriate, of the relevant passages	Relevant to claim No.
X	WO 02/102442 A (KIEHNE BRUCE LEIGH ; OCCUPATIONAL & MEDICAL INNOVAT (AU)) 27 December 2002 (2002-12-27) page 9, line 1 - page 10, line 22; claim 1; figures 1-11 page 12, line 19 - page 15, line 16 -----	16,17

4

Form PCT/ISA/210 (continuation of second sheet) (January 2004)

ABBOTT Exhibit 2001
Page 75 of 77
Dexcom, Inc. v. Abbott Diabetes Care Inc.
IPR2023-01409

International application No.
PCT/US2004/030317

INTERNATIONAL SEARCH REPORT

Box II Observations where certain claims were found unsearchable (Continuation of item 2 of first sheet)

This International Search Report has not been established in respect of certain claims under Article 17(2)(a) for the following reasons:

1. [X] Claims Nos.: 1-9,21-24
because they relate to subject matter not required to be searched by this Authority, namely:

Claims 1-9 and 21-24 relate to a medical method, Rule 67.1 (iv) PCT, because an infusion device is introduced into a patient. The application does not meet the requirement of Rule 39.1 (iv), because these claims are a method of treatment of the human.

2. [ ] Claims Nos.:
because they relate to parts of the International Application that do not comply with the prescribed requirements to such an extent that no meaningful International Search can be carried out, specifically:

3. [ ] Claims Nos.:
because they are dependent claims and are not drafted in accordance with the second and third sentences of Rule 6.4(a).

Box III Observations where unity of invention is lacking (Continuation of item 3 of first sheet)

This International Searching Authority found multiple inventions in this international application, as follows:

1. [ ] As all required additional search fees were timely paid by the applicant, this International Search Report covers all searchable claims.

2. [ ] As all searchable claims could be searched without effort justifying an additional fee, this Authority did not invite payment of any additional fee.

3. [ ] As only some of the required additional search fees were timely paid by the applicant, this International Search Report covers only those claims for which fees were paid, specifically claims Nos.:

4. [ ] No required additional search fees were timely paid by the applicant. Consequently, this International Search Report is restricted to the invention first mentioned in the claims; it is covered by claims Nos.:

Remark on Protest

[ ] The additional search fees were accompanied by the applicant's protest.

[ ] No protest accompanied the payment of additional search fees.

INTERNATIONAL SEARCH REPORT

nformation on patent family members

ıational Application No
/US2004/030317

Patent document cited in search report		Publication date	Patent family member(s)			Publication date
US 5545143	A	13-08-1996	US	6017328	A	25-01-2000
			AT	187654	T	15-01-2000
			DE	69422073	D1	20-01-2000
			DE	69422073	T2	06-04-2000
			DK	615768	T3	10-04-2000
			EP	0615768	A2	21-09-1994
WO 02081012	A	17-10-2002	DE	10117285	A1	07-11-2002
			DE	20110059	U1	14-08-2002
			WO	02081012	A2	17-10-2002
			EP	1383560	A2	28-01-2004
			JP	2004524926	T	19-08-2004
			US	2004158207	A1	12-08-2004
US 2001053889	A1	20-12-2001	DE	19821723	A1	18-11-1999
			AT	270569	T	15-07-2004
			AU	748365	B2	06-06-2002
			AU	2809399	A	25-11-1999
			CA	2271339	A1	14-11-1999
			DE	59909882	D1	12-08-2004
			EP	0956879	A1	17-11-1999
			JP	3342674	B2	11-11-2002
			JP	11347120	A	21-12-1999
			US	6302866	B1	16-10-2001
WO 02102442	A	27-12-2002	WO	02102442	A1	27-12-2002
			CA	2449894	A1	27-12-2002
			EP	1395316	A1	10-03-2004
			JP	2004528952	T	24-09-2004
			US	2004138619	A1	15-07-2004