US010827954B2

(12) **United States Patent**
Hoss et al.

(10) **Patent No.: US 10,827,954 B2**
(45) **Date of Patent: Nov. 10, 2020**

(54) **CONTINUOUS ANALYTE MEASUREMENT SYSTEMS AND SYSTEMS AND METHODS FOR IMPLANTING THEM**

(71) Applicant: **Abbott Diabetes Care Inc.**, Alameda, CA (US)

(72) Inventors: **Udo Hoss**, Castro Valley, CA (US); **John Charles Mazza**, Long Beach, CA (US); **Phu Le**, Dublin, CA (US)

(73) Assignee: **Abbott Diabetes Care Inc.**, Alameda, CA (US)

(*) Notice: Subject to any disclaimer, the term of this patent is extended or adjusted under 35 U.S.C. 154(b) by 532 days.

(21) Appl. No.: **15/789,942**

(22) Filed: **Oct. 20, 2017**

(65) **Prior Publication Data**

US 2018/0035931 A1 Feb. 8, 2018

Related U.S. Application Data

(63) Continuation of application No. 12/842,013, filed on Jul. 22, 2010, now Pat. No. 9,795,326.

(60) Provisional application No. 61/227,967, filed on Jul. 23, 2009.

(51) **Int. Cl.**

A61B 5/00	(2006.01)
A61B 5/145	(2006.01)
A61B 5/1486	(2006.01)

(52) **U.S. Cl.**

CPC ***A61B 5/14532*** (2013.01); ***A61B 5/14865*** (2013.01); *A61B 5/002* (2013.01); *A61B 2562/227* (2013.01)

(58) **Field of Classification Search**

CPC A61B 5/14532; A61B 5/14865; A61B 2562/227; A61B 5/002; A61B 5/1495

See application file for complete search history.

(56) **References Cited**

U.S. PATENT DOCUMENTS

3,581,062	A	5/1971	Aston
3,926,760	A	12/1975	Allen et al.
3,949,388	A	4/1976	Fuller
3,960,497	A	6/1976	Acord et al.
4,033,330	A	7/1977	Willis et al.
4,036,749	A	7/1977	Anderson
4,055,175	A	10/1977	Clemens et al.
4,129,128	A	12/1978	McFarlane
4,245,634	A	1/1981	Albisser et al.
4,327,725	A	5/1982	Cortese et al.
4,344,438	A	8/1982	Schultz
4,345,603	A	8/1982	Schulman
4,349,728	A	9/1982	Phillips et al.

(Continued)

FOREIGN PATENT DOCUMENTS

DE	4401400	7/1995
EP	0098592	1/1984

(Continued)

OTHER PUBLICATIONS

European Patent Application No. 10746954.6, Examination Report dated Dec. 14, 2017.

(Continued)

Primary Examiner — Christian Jang

(74) *Attorney, Agent, or Firm* — Baker Botts L.L.P.

(57) **ABSTRACT**

Low profile continuous analyte measurement systems and systems and methods for implantation within the skin of a patient are provided.

20 Claims, 14 Drawing Sheets

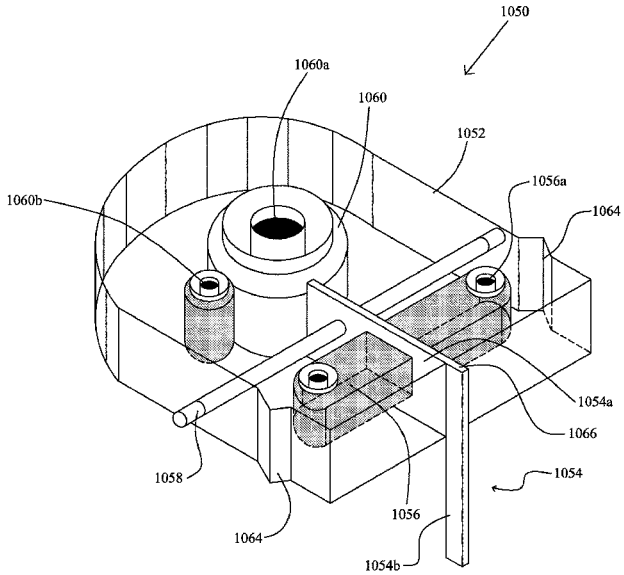

DEXCOM EXHIBIT 1060
Dexcom v. Abbott Diabetes
IPR2023-01409

(56) **References Cited**

U.S. PATENT DOCUMENTS

4,425,920	A	1/1984	Bourland et al.
4,441,968	A	4/1984	Emmer et al.
4,464,170	A	8/1984	Clemens et al.
4,478,976	A	10/1984	Goertz et al.
4,494,950	A	1/1985	Fischell
4,509,531	A	4/1985	Ward
4,527,240	A	7/1985	Kvitash
4,538,616	A	9/1985	Rogoff
4,545,382	A	10/1985	Higgins et al.
4,619,793	A	10/1986	Lee
4,671,288	A	6/1987	Gough
4,703,756	A	11/1987	Gough et al.
4,711,245	A	12/1987	Higgins et al.
4,731,726	A	3/1988	Allen, III
4,749,985	A	6/1988	Corsberg
4,757,022	A	7/1988	Shults et al.
4,777,953	A	10/1988	Ash et al.
4,779,618	A	10/1988	Mund et al.
4,847,785	A	7/1989	Stephens
4,854,322	A	8/1989	Ash et al.
4,890,620	A	1/1990	Gough
4,925,268	A	5/1990	Iyer et al.
4,953,552	A	9/1990	DeMarzo
4,986,271	A	1/1991	Wilkins
4,995,402	A	2/1991	Smith et al.
5,000,180	A	3/1991	Kuypers et al.
5,002,054	A	3/1991	Ash et al.
5,019,974	A	5/1991	Beckers
5,050,612	A	9/1991	Matsumura
5,051,688	A	9/1991	Murase et al.
5,055,171	A	10/1991	Peck
5,068,536	A	11/1991	Rosenthal
5,077,476	A	12/1991	Rosenthal
5,082,550	A	1/1992	Rishpon et al.
5,106,365	A	4/1992	Hernandez
5,122,925	A	6/1992	Inpyn
5,135,004	A	8/1992	Adams et al.
5,145,381	A	9/1992	Volz
5,165,407	A	11/1992	Wilson et al.
5,202,261	A	4/1993	Musho et al.
5,204,264	A	4/1993	Kaminer et al.
5,210,778	A	5/1993	Massart
5,228,449	A	7/1993	Christ et al.
5,231,988	A	8/1993	Wernicke et al.
5,246,867	A	9/1993	Lakowicz et al.
5,251,126	A	10/1993	Kahn et al.
5,262,035	A	11/1993	Gregg et al.
5,262,305	A	11/1993	Heller et al.
5,264,104	A	11/1993	Gregg et al.
5,264,105	A	11/1993	Gregg et al.
5,279,294	A	1/1994	Anderson et al.
5,285,792	A	2/1994	Sjoquist et al.
5,293,877	A	3/1994	O'Hara et al.
5,299,571	A	4/1994	Mastrototaro
5,320,715	A	6/1994	Berg
5,320,725	A	6/1994	Gregg et al.
5,322,063	A	6/1994	Allen et al.
5,330,634	A	7/1994	Wong et al.
5,340,722	A	8/1994	Wolfbeis et al.
5,342,789	A	8/1994	Chick et al.
5,356,786	A	10/1994	Heller et al.
5,360,404	A	11/1994	Novacek et al.
5,372,427	A	12/1994	Padovani et al.
5,379,238	A	1/1995	Stark
5,384,547	A	1/1995	Lynk et al.
5,390,671	A	2/1995	Lord et al.
5,391,250	A	2/1995	Cheney, II et al.
5,408,999	A	4/1995	Singh et al.
5,410,326	A	4/1995	Goldstein
5,411,647	A	5/1995	Johnson et al.
5,431,160	A	7/1995	Wilkins
5,431,921	A	7/1995	Thombre
5,438,983	A	8/1995	Falcone
5,462,645	A	10/1995	Albery et al.
5,472,317	A	12/1995	Field et al.
5,489,414	A	2/1996	Schreiber et al.
5,497,772	A	3/1996	Schulman et al.
5,505,828	A	4/1996	Wong et al.
5,507,288	A	4/1996	Bocker et al.
5,509,410	A	4/1996	Hill et al.
5,514,718	A	5/1996	Lewis et al.
5,531,878	A	7/1996	Vadgama et al.
5,543,326	A	8/1996	Heller et al.
5,552,997	A	9/1996	Massart
5,555,190	A	9/1996	Derby et al.
5,564,434	A	10/1996	Halperin et al.
5,568,400	A	10/1996	Stark et al.
5,568,806	A	10/1996	Cheney, II et al.
5,569,186	A	10/1996	Lord et al.
5,582,184	A	12/1996	Erickson et al.
5,586,553	A	12/1996	Halili et al.
5,593,852	A	1/1997	Heller et al.
5,601,435	A	2/1997	Quy
5,609,575	A	3/1997	Larson et al.
5,628,310	A	5/1997	Rao et al.
5,628,324	A	5/1997	Sarbach
5,628,890	A	5/1997	Carter et al.
5,653,239	A	8/1997	Pompei et al.
5,660,163	A	8/1997	Schulman et al.
5,665,222	A	9/1997	Heller et al.
5,711,001	A	1/1998	Bussan et al.
5,711,861	A	1/1998	Ward et al.
5,726,646	A	3/1998	Bane et al.
5,735,285	A	4/1998	Albert et al.
5,748,103	A	5/1998	Flach et al.
5,772,586	A	6/1998	Heinonen et al.
5,791,344	A	8/1998	Schulman et al.
5,797,940	A	8/1998	Mawhirt et al.
5,814,020	A	9/1998	Gross
5,820,551	A	10/1998	Hill et al.
5,822,715	A	10/1998	Worthington et al.
5,833,603	A	11/1998	Kovacs et al.
5,842,189	A	11/1998	Keeler et al.
5,858,001	A	1/1999	Tsals et al.
5,899,855	A	5/1999	Brown
5,914,026	A	6/1999	Blubaugh, Jr. et al.
5,918,603	A	7/1999	Brown
5,919,141	A	7/1999	Money et al.
5,925,021	A	7/1999	Castellano et al.
5,931,814	A	8/1999	Gross et al.
5,942,979	A	8/1999	Luppino
5,951,521	A	9/1999	Mastrototaro et al.
5,954,643	A	9/1999	Van Antwerp et al.
5,957,854	A	9/1999	Besson et al.
5,961,451	A	10/1999	Reber et al.
5,964,993	A	10/1999	Blubaugh, Jr. et al.
5,965,380	A	10/1999	Heller et al.
5,971,922	A	10/1999	Arita et al.
5,980,708	A	11/1999	Champagne et al.
5,993,411	A	11/1999	Choi
5,995,860	A	11/1999	Sun et al.
5,997,501	A	12/1999	Gross et al.
6,001,067	A	12/1999	Shults et al.
6,004,278	A	12/1999	Botich et al.
6,024,699	A	2/2000	Surwit et al.
6,028,413	A	2/2000	Brockmann
6,049,727	A	4/2000	Crothall
6,052,565	A	4/2000	Ishikura et al.
6,066,243	A	5/2000	Anderson et al.
6,071,391	A	6/2000	Gotoh et al.
6,083,710	A	7/2000	Heller et al.
6,088,608	A	7/2000	Schulman et al.
6,091,976	A	7/2000	Pfeiffer et al.
6,093,172	A	7/2000	Funderburk et al.
6,096,364	A	8/2000	Bok et al.
6,103,033	A	8/2000	Say et al.
6,117,290	A	9/2000	Say et al.
6,119,028	A	9/2000	Schulman et al.
6,120,676	A	9/2000	Heller et al.
6,121,009	A	9/2000	Heller et al.
6,121,611	A	9/2000	Lindsay et al.
6,122,351	A	9/2000	Schlueter, Jr. et al.
6,134,461	A	10/2000	Say et al.
6,143,164	A	11/2000	Heller et al.

(56) **References Cited**

U.S. PATENT DOCUMENTS

6,144,837 A 11/2000 Quy
6,157,850 A 12/2000 Diab et al.
6,159,147 A 12/2000 Lichter et al.
6,161,095 A 12/2000 Brown
6,162,611 A 12/2000 Heller et al.
6,175,752 B1 1/2001 Say et al.
6,186,982 B1 2/2001 Gross et al.
6,200,265 B1 3/2001 Walsh et al.
6,212,416 B1 4/2001 Ward et al.
6,219,574 B1 4/2001 Cormier et al.
6,223,283 B1 4/2001 Chaiken et al.
6,248,067 B1 6/2001 Causey, III et al.
6,254,586 B1 7/2001 Mann et al.
6,259,937 B1 7/2001 Schulman et al.
6,270,455 B1 8/2001 Brown
6,275,717 B1 8/2001 Gross et al.
6,283,761 B1 9/2001 Joao
6,284,478 B1 9/2001 Heller et al.
6,293,925 B1 9/2001 Safabash et al.
6,295,506 B1 9/2001 Heinonen et al.
6,299,347 B1 10/2001 Pompei
6,299,757 B1 10/2001 Feldman et al.
6,306,104 B1 10/2001 Cunningham et al.
6,309,884 B1 10/2001 Cooper et al.
6,314,317 B1 11/2001 Willis
6,322,801 B1 11/2001 Lorenzi et al.
6,329,161 B1 12/2001 Heller et al.
6,331,244 B1 12/2001 Lewis et al.
6,338,790 B1 1/2002 Feldman et al.
6,348,640 B1 2/2002 Navot et al.
6,359,270 B1 3/2002 Bridson
6,359,444 B1 3/2002 Grimes
6,360,888 B1 3/2002 McIvor et al.
6,366,794 B1 4/2002 Moussy et al.
6,368,141 B1 4/2002 Van Antwerp et al.
6,377,828 B1 4/2002 Chaiken et al.
6,377,894 B1 4/2002 Deweese et al.
6,379,301 B1 4/2002 Worthington et al.
6,418,332 B1 7/2002 Mastrototaro et al.
6,418,346 B1 7/2002 Nelson et al.
6,424,847 B1 7/2002 Mastrototaro et al.
6,427,088 B1 7/2002 Bowman, IV et al.
6,440,068 B1 8/2002 Brown et al.
6,445,374 B2 9/2002 Albert et al.
6,461,496 B1 10/2002 Feldman et al.
6,471,689 B1 10/2002 Joseph et al.
6,478,736 B1 11/2002 Mault
6,482,176 B1 11/2002 Wich
6,484,046 B1 11/2002 Say et al.
6,493,069 B1 12/2002 Nagashimada et al.
6,497,655 B1 12/2002 Linberg et al.
6,498,043 B1 12/2002 Schulman et al.
6,503,381 B1 1/2003 Gotoh et al.
6,512,939 B1 1/2003 Colvin et al.
6,514,460 B1 2/2003 Fendrock
6,514,689 B2 2/2003 Han et al.
6,514,718 B2 2/2003 Heller et al.
6,522,927 B1 2/2003 Bishay et al.
6,540,891 B1 4/2003 Stewart et al.
6,546,268 B1 4/2003 Ishikawa et al.
6,549,796 B2 4/2003 Sohrab
6,551,494 B1 4/2003 Heller et al.
6,554,798 B1 4/2003 Mann et al.
6,558,320 B1 5/2003 Causey, III et al.
6,558,321 B1 5/2003 Burd et al.
6,560,471 B1 5/2003 Heller et al.
6,561,978 B1 5/2003 Conn et al.
6,562,001 B2 5/2003 Lebel et al.
6,564,105 B2 5/2003 Starkweather et al.
6,565,509 B1 5/2003 Say et al.
6,571,128 B2 5/2003 Lebel et al.
6,572,545 B2 6/2003 Knobbe et al.
6,574,490 B2 6/2003 Abbink et al.
6,576,101 B1 6/2003 Heller et al.
6,576,117 B1 6/2003 Iketaki et al.
6,577,899 B2 6/2003 Lebel et al.
6,579,690 B1 6/2003 Bonnecaze et al.
6,585,644 B2 7/2003 Lebel et al.
6,591,125 B1 7/2003 Buse et al.
6,592,745 B1 7/2003 Feldman et al.
6,595,919 B2 7/2003 Berner et al.
6,600,997 B2 7/2003 Deweese et al.
6,605,200 B1 8/2003 Mao et al.
6,605,201 B1 8/2003 Mao et al.
6,607,509 B2 8/2003 Bobroff et al.
6,610,012 B2 8/2003 Mault
6,616,819 B1 9/2003 Liamos et al.
6,618,934 B1 9/2003 Feldman et al.
6,631,281 B1 10/2003 Kastle
6,633,772 B2 10/2003 Ford et al.
6,635,014 B2 10/2003 Starkweather et al.
6,641,533 B2 11/2003 Causey, III et al.
6,648,821 B2 11/2003 Lebel et al.
6,650,471 B2 11/2003 Doi
6,654,625 B1 11/2003 Say et al.
6,656,114 B1 12/2003 Poulsen et al.
6,658,396 B1 12/2003 Tang et al.
6,659,948 B2 12/2003 Lebel et al.
6,668,196 B1 12/2003 Villegas et al.
6,675,030 B2 1/2004 Ciuczak et al.
6,676,816 B2 1/2004 Mao et al.
6,687,546 B2 2/2004 Lebel et al.
6,689,056 B1 2/2004 Kilcoyne et al.
6,694,191 B2 2/2004 Starkweather et al.
6,695,860 B1 2/2004 Ward et al.
6,702,857 B2 3/2004 Brauker et al.
6,721,582 B2 4/2004 Trepagnier et al.
6,730,025 B1 5/2004 Platt
6,730,200 B1 5/2004 Stewart et al.
6,733,446 B2 5/2004 Lebel et al.
6,736,957 B1 5/2004 Forrow et al.
6,740,075 B2 5/2004 Lebel et al.
6,740,518 B1 5/2004 Duong et al.
6,741,877 B1 5/2004 Shults et al.
6,746,582 B2 6/2004 Heller et al.
6,749,740 B2 6/2004 Liamos et al.
6,758,810 B2 7/2004 Lebel et al.
6,764,581 B1 7/2004 Forrow et al.
6,770,030 B1 8/2004 Schaupp et al.
6,773,671 B1 8/2004 Lewis et al.
6,790,178 B1 9/2004 Mault et al.
6,804,558 B2 10/2004 Haller et al.
6,805,780 B1 10/2004 Ryu et al.
6,809,653 B1 10/2004 Mann et al.
6,810,290 B2 10/2004 Lebel et al.
6,811,533 B2 11/2004 Lebel et al.
6,811,534 B2 11/2004 Bowman, IV et al.
6,813,519 B2 11/2004 Lebel et al.
6,837,988 B2 1/2005 Leong et al.
6,862,465 B2 3/2005 Shults et al.
6,865,407 B2 3/2005 Kimball et al.
6,873,268 B2 3/2005 Lebel et al.
6,878,112 B2 4/2005 Linberg et al.
6,881,551 B2 4/2005 Heller et al.
6,882,940 B2 4/2005 Potts et al.
6,892,085 B2 5/2005 McIvor et al.
6,893,545 B2 5/2005 Gotoh et al.
6,895,263 B2 5/2005 Shin et al.
6,895,265 B2 5/2005 Silver
6,923,763 B1 8/2005 Kovatchev et al.
6,931,327 B2 8/2005 Goode, Jr. et al.
6,932,892 B2 8/2005 Chen et al.
6,932,894 B2 8/2005 Mao et al.
6,936,006 B2 8/2005 Sabra
6,942,518 B2 9/2005 Liamos et al.
6,950,708 B2 9/2005 Bowman, IV et al.
6,954,662 B2 10/2005 Freger et al.
6,958,705 B2 10/2005 Lebel et al.
6,968,294 B2 11/2005 Gutta et al.
6,971,274 B2 12/2005 Olin
6,971,999 B2 12/2005 Py et al.
6,974,437 B2 12/2005 Lebel et al.
6,983,176 B2 1/2006 Gardner et al.
6,990,366 B2 1/2006 Say et al.

(56) **References Cited**

U.S. PATENT DOCUMENTS

6,997,907	B2	2/2006	Safabash et al.
6,998,247	B2	2/2006	Monfre et al.
6,999,854	B2	2/2006	Roth
7,003,336	B2	2/2006	Holker et al.
7,003,340	B2	2/2006	Say et al.
7,003,341	B2	2/2006	Say et al.
7,011,630	B2	3/2006	Desai et al.
7,015,817	B2	3/2006	Copley et al.
7,016,713	B2	3/2006	Gardner et al.
7,022,072	B2	4/2006	Fox et al.
7,022,219	B2	4/2006	Mansouri et al.
7,024,245	B2	4/2006	Lebel et al.
7,025,425	B2	4/2006	Kovatchev et al.
7,027,848	B2	4/2006	Robinson et al.
7,027,931	B1	4/2006	Jones et al.
7,041,068	B2	5/2006	Freeman et al.
7,041,468	B2	5/2006	Drucker et al.
7,046,153	B2	5/2006	Oja et al.
7,052,472	B1	5/2006	Miller et al.
7,052,483	B2	5/2006	Wojcik
7,056,302	B2	6/2006	Douglas
7,058,453	B2	6/2006	Nelson et al.
7,060,031	B2	6/2006	Webb et al.
7,073,246	B2	7/2006	Bhullar et al.
7,074,307	B2	7/2006	Simpson et al.
7,081,195	B2	7/2006	Simpson et al.
7,092,891	B2	8/2006	Maus et al.
7,098,803	B2	8/2006	Mann et al.
7,108,778	B2	9/2006	Simpson et al.
7,110,803	B2	9/2006	Shults et al.
7,113,821	B1	9/2006	Sun et al.
7,118,667	B2	10/2006	Lee
7,123,950	B2	10/2006	Mannheimer
7,125,382	B2	10/2006	Zhou et al.
7,134,999	B2	11/2006	Brauker et al.
7,136,689	B2	11/2006	Shults et al.
7,153,265	B2	12/2006	Vachon
7,155,290	B2	12/2006	Von Arx et al.
7,167,818	B2	1/2007	Brown
7,171,274	B2	1/2007	Starkweather et al.
7,174,199	B2	2/2007	Berner et al.
7,179,226	B2	2/2007	Crothall et al.
7,183,102	B2	2/2007	Monfre et al.
7,190,988	B2	3/2007	Say et al.
7,192,450	B2	3/2007	Brauker et al.
7,198,606	B2	4/2007	Boecker et al.
7,207,974	B2	4/2007	Safabash et al.
7,225,535	B2	6/2007	Feldman et al.
7,226,442	B2	6/2007	Sheppard et al.
7,226,978	B2	6/2007	Tapsak et al.
7,258,673	B2	8/2007	Racchini et al.
7,267,665	B2	9/2007	Steil et al.
7,276,029	B2	10/2007	Goode, Jr. et al.
7,278,983	B2	10/2007	Ireland et al.
7,286,894	B1	10/2007	Grant et al.
7,291,497	B2	11/2007	Holmes et al.
7,295,867	B2	11/2007	Berner et al.
7,299,082	B2	11/2007	Feldman et al.
7,310,544	B2	12/2007	Brister et al.
7,317,938	B2	1/2008	Lorenz et al.
7,335,294	B2	2/2008	Heller et al.
7,354,420	B2	4/2008	Steil et al.
7,364,592	B2	4/2008	Carr-Brendel et al.
7,366,556	B2	4/2008	Brister et al.
7,379,765	B2	5/2008	Petisce et al.
7,384,397	B2	6/2008	Zhang et al.
7,386,937	B2	6/2008	Bhullar et al.
7,404,796	B2	7/2008	Ginsberg
7,424,318	B2	9/2008	Brister et al.
7,433,727	B2	10/2008	Ward et al.
7,460,898	B2	12/2008	Brister et al.
7,467,003	B2	12/2008	Brister et al.
7,468,125	B2	12/2008	Kraft et al.
7,471,972	B2	12/2008	Rhodes et al.
7,474,992	B2	1/2009	Ariyur
7,492,254	B2	2/2009	Bandy et al.
7,494,465	B2	2/2009	Brister et al.
7,497,827	B2	3/2009	Brister et al.
7,519,408	B2	4/2009	Rasdal et al.
7,519,478	B2	4/2009	Bartkowiak et al.
7,523,004	B2	4/2009	Bartkowiak et al.
7,565,197	B2	7/2009	Haubrich et al.
7,574,266	B2	8/2009	Dudding et al.
7,583,990	B2	9/2009	Goode, Jr. et al.
7,591,801	B2	9/2009	Brauker et al.
7,599,726	B2	10/2009	Goode, Jr. et al.
7,602,310	B2	10/2009	Mann et al.
7,613,491	B2	11/2009	Boock et al.
7,615,007	B2	11/2009	Shults et al.
7,630,748	B2	12/2009	Budiman
7,632,228	B2	12/2009	Brauker et al.
7,635,594	B2	12/2009	Holmes et al.
7,637,868	B2	12/2009	Saint et al.
7,640,048	B2	12/2009	Dobbles et al.
7,651,596	B2	1/2010	Petisce et al.
7,651,845	B2	1/2010	Doyle, III et al.
7,653,425	B2	1/2010	Hayter et al.
7,654,956	B2	2/2010	Brister et al.
7,657,297	B2	2/2010	Simpson et al.
7,659,823	B1	2/2010	Killian et al.
7,699,775	B2	4/2010	Desai et al.
7,699,964	B2	4/2010	Feldman et al.
7,711,402	B2	5/2010	Shults et al.
7,711,493	B2	5/2010	Bartkowiak et al.
7,713,574	B2	5/2010	Brister et al.
7,715,893	B2	5/2010	Kamath et al.
7,729,737	B2	6/2010	Ward
7,736,310	B2	6/2010	Taub et al.
7,741,734	B2	6/2010	Joannopoulos et al.
7,751,864	B2	7/2010	Buck, Jr.
7,766,829	B2	8/2010	Sloan et al.
7,768,386	B2	8/2010	Hayter et al.
7,768,387	B2	8/2010	Fennell et al.
7,774,145	B2	8/2010	Bruaker et al.
7,775,444	B2	8/2010	DeRocco et al.
7,778,680	B2	8/2010	Goode, Jr. et al.
7,778,795	B2	8/2010	Fukushima et al.
7,779,332	B2	8/2010	Karr et al.
7,811,231	B2	10/2010	Jin et al.
7,813,809	B2	10/2010	Strother et al.
7,826,382	B2	11/2010	Sicurello et al.
7,826,981	B2	11/2010	Goode, Jr. et al.
7,857,760	B2	12/2010	Brister et al.
7,866,026	B1	1/2011	Wang et al.
7,882,611	B2	2/2011	Shah et al.
7,885,697	B2	2/2011	Brister et al.
7,889,069	B2	2/2011	Fifolt et al.
7,899,545	B2	3/2011	John
7,905,833	B2	3/2011	Brister et al.
7,911,010	B2	3/2011	Stetter
7,914,450	B2	3/2011	Goode, Jr. et al.
7,920,906	B2	4/2011	Goode et al.
7,920,907	B2	4/2011	McGarraugh et al.
7,928,850	B2	4/2011	Hayter et al.
7,938,797	B2	5/2011	Estes
7,941,200	B2	5/2011	Weinert et al.
7,946,984	B2	5/2011	Brister et al.
7,946,985	B2	5/2011	Mastrototaro et al.
7,954,385	B2	6/2011	Raisanen
7,970,449	B2	6/2011	Ward
7,972,296	B2	7/2011	Braig et al.
7,974,672	B2	7/2011	Shults et al.
7,976,466	B2	7/2011	Ward et al.
7,978,063	B2	7/2011	Baldus et al.
7,996,158	B2	8/2011	Hayter et al.
8,005,524	B2	8/2011	Brauker et al.
8,010,174	B2	8/2011	Goode et al.
8,010,256	B2	8/2011	Oowada
8,060,173	B2	11/2011	Goode, Jr. et al.
8,103,471	B2	1/2012	Hayter
8,140,312	B2	3/2012	Hayter et al.
8,150,321	B2	4/2012	Winter et al.
8,150,516	B2	4/2012	Levine et al.
8,160,670	B2	4/2012	Quyang et al.

(56) **References Cited**

U.S. PATENT DOCUMENTS

8,170,803	B2	5/2012	Kamath et al.
8,179,266	B2	5/2012	Hermle
8,192,394	B2	6/2012	Estes et al.
8,216,138	B1	7/2012	McGarraugh et al.
8,239,166	B2	8/2012	Hayter et al.
8,255,026	B1	8/2012	Al-Ali
8,260,558	B2	9/2012	Hayter et al.
8,282,549	B2	10/2012	Brauker et al.
8,346,335	B2	1/2013	Harper et al.
8,346,337	B2	1/2013	Heller et al.
8,374,668	B1	2/2013	Hayter et al.
8,376,945	B2	2/2013	Hayter et al.
8,377,271	B2	2/2013	Mao et al.
8,409,093	B2	4/2013	Bugler
8,444,560	B2	5/2013	Hayter et al.
8,461,985	B2	6/2013	Fennell et al.
8,465,425	B2	6/2013	Heller et al.
8,484,005	B2	7/2013	Hayter et al.
8,543,354	B2	9/2013	Luo et al.
8,560,038	B2	10/2013	Hayter et al.
8,571,808	B2	10/2013	Hayter
8,583,205	B2	11/2013	Budiman et al.
8,597,570	B2	12/2013	Terashima et al.
8,600,681	B2	12/2013	Hayter et al.
8,612,163	B2	12/2013	Hayter et al.
8,657,746	B2	2/2014	Roy
8,682,615	B2	3/2014	Hayter et al.
8,688,188	B2	4/2014	Heller et al.
8,710,993	B2	4/2014	Hayter et al.
8,834,366	B2	9/2014	Hayter et al.
8,845,536	B2	9/2014	Brauker et al.
9,060,719	B2	6/2015	Hayter et al.
9,289,179	B2	3/2016	Hayter et al.
9,398,872	B2	7/2016	Hayter et al.
9,408,566	B2	8/2016	Hayter et al.
9,439,586	B2	9/2016	Bugler
9,483,608	B2	11/2016	Hayter et al.
9,558,325	B2	1/2017	Hayter et al.
9,743,872	B2	8/2017	Hayter et al.
2001/0031931	A1	10/2001	Cunningham et al.
2001/0037366	A1	11/2001	Webb et al.
2002/0016534	A1	2/2002	Trepagnier et al.
2002/0019022	A1	2/2002	Dunn et al.
2002/0032374	A1	3/2002	Holker et al.
2002/0042090	A1	4/2002	Heller et al.
2002/0050250	A1	5/2002	Peterson et al.
2002/0052618	A1	5/2002	Haar et al.
2002/0054320	A1	5/2002	Ogino
2002/0055711	A1	5/2002	Lavi et al.
2002/0065454	A1	5/2002	Lebel et al.
2002/0068860	A1	6/2002	Clark
2002/0095076	A1	7/2002	Krausman et al.
2002/0103499	A1	8/2002	Perez et al.
2002/0106709	A1	8/2002	Potts et al.
2002/0117639	A1	8/2002	Paolini et al.
2002/0120186	A1	8/2002	Keimel
2002/0128594	A1	9/2002	Das et al.
2002/0147135	A1	10/2002	Schnell
2002/0150959	A1	10/2002	Lejeunne et al.
2002/0161288	A1	10/2002	Shin et al.
2003/0023317	A1	1/2003	Brauker et al.
2003/0023461	A1	1/2003	Quintanilla et al.
2003/0028089	A1	2/2003	Galley et al.
2003/0032077	A1	2/2003	Itoh et al.
2003/0032867	A1	2/2003	Crothall et al.
2003/0032874	A1	2/2003	Rhodes et al.
2003/0042137	A1	3/2003	Mao et al.
2003/0050546	A1	3/2003	Desai et al.
2003/0054428	A1	3/2003	Monfre et al.
2003/0060692	A1	3/2003	Ruchti et al.
2003/0060753	A1	3/2003	Starkweather et al.
2003/0065308	A1	4/2003	Lebel et al.
2003/0100040	A1	5/2003	Bonnecaze et al.
2003/0100821	A1	5/2003	Heller et al.
2003/0114897	A1	6/2003	Von Arx et al.
2003/0130616	A1	7/2003	Steil et al.
2003/0134347	A1	7/2003	Heller et al.
2003/0147515	A1	8/2003	Kai et al.
2003/0168338	A1	9/2003	Gao et al.
2003/0176933	A1	9/2003	Lebel et al.
2003/0187338	A1	10/2003	Say et al.
2003/0191377	A1	10/2003	Robinson et al.
2003/0199744	A1	10/2003	Buse et al.
2003/0199790	A1	10/2003	Boecker et al.
2003/0212379	A1	11/2003	Bylund et al.
2003/0217966	A1	11/2003	Tapsak et al.
2003/0223906	A1	12/2003	McAllister et al.
2003/0235817	A1	12/2003	Bartkowiak et al.
2004/0010186	A1	1/2004	Kimball et al.
2004/0010207	A1	1/2004	Flaherty et al.
2004/0011671	A1	1/2004	Shults et al.
2004/0024553	A1	2/2004	Monfre et al.
2004/0034289	A1	2/2004	Teller et al.
2004/0040840	A1	3/2004	Mao et al.
2004/0045879	A1	3/2004	Shults et al.
2004/0054263	A1	3/2004	Moerman et al.
2004/0063435	A1	4/2004	Sakamoto et al.
2004/0064068	A1	4/2004	DeNuzzio et al.
2004/0099529	A1	5/2004	Mao et al.
2004/0106858	A1	6/2004	Say et al.
2004/0111017	A1	6/2004	Say et al.
2004/0116847	A1	6/2004	Wall
2004/0116866	A1	6/2004	Gorman et al.
2004/0117204	A1	6/2004	Mazar et al.
2004/0122353	A1	6/2004	Shahmirian et al.
2004/0133164	A1	7/2004	Funderburk et al.
2004/0133390	A1	7/2004	Osorio et al.
2004/0135571	A1	7/2004	Uutela et al.
2004/0135684	A1	7/2004	Steinthal et al.
2004/0138588	A1	7/2004	Saikley et al.
2004/0142403	A1	7/2004	Hetzel et al.
2004/0147872	A1	7/2004	Thompson
2004/0147996	A1	7/2004	Miazga et al.
2004/0152622	A1	8/2004	Keith et al.
2004/0162678	A1	8/2004	Hetzel et al.
2004/0167801	A1	8/2004	Say et al.
2004/0171921	A1	9/2004	Say et al.
2004/0176672	A1	9/2004	Silver et al.
2004/0186362	A1	9/2004	Brauker et al.
2004/0186365	A1	9/2004	Jin et al.
2004/0193020	A1	9/2004	Chiba et al.
2004/0193090	A1	9/2004	Lebel et al.
2004/0199056	A1	10/2004	Husemann et al.
2004/0199059	A1	10/2004	Brauker et al.
2004/0204687	A1	10/2004	Mogensen et al.
2004/0204868	A1	10/2004	Maynard et al.
2004/0219664	A1	11/2004	Heller et al.
2004/0223985	A1	11/2004	Dunfiled et al.
2004/0225338	A1	11/2004	Lebel et al.
2004/0236200	A1	11/2004	Say et al.
2004/0249253	A1	12/2004	Racchini et al.
2004/0249254	A1	12/2004	Racchini et al.
2004/0254433	A1	12/2004	Bandis et al.
2004/0254434	A1	12/2004	Goodnow et al.
2004/0260478	A1	12/2004	Schwamm
2004/0267300	A1	12/2004	Mace
2005/0001024	A1	1/2005	Kusaka et al.
2005/0003470	A1	1/2005	Nelson et al.
2005/0004494	A1	1/2005	Perez et al.
2005/0010269	A1	1/2005	Lebel et al.
2005/0017864	A1	1/2005	Tsoukalis
2005/0021066	A1	1/2005	Kuhr et al.
2005/0027177	A1	2/2005	Shin et al.
2005/0027180	A1	2/2005	Goode et al.
2005/0027181	A1	2/2005	Goode et al.
2005/0027182	A1	2/2005	Siddiqui et al.
2005/0027462	A1	2/2005	Goode et al.
2005/0027463	A1	2/2005	Goode et al.
2005/0031689	A1	2/2005	Shults et al.
2005/0043598	A1	2/2005	Goode, Jr. et al.
2005/0049179	A1	3/2005	Davidson et al.
2005/0049473	A1	3/2005	Desai et al.
2005/0070774	A1	3/2005	Addison et al.
2005/0070777	A1	3/2005	Cho et al.

(56) **References Cited**

U.S. PATENT DOCUMENTS

2005/0090607 A1 4/2005 Tapsak et al.
2005/0096516 A1 5/2005 Soykan et al.
2005/0096520 A1 5/2005 Maekawa et al.
2005/0103624 A1 5/2005 Bhullar et al.
2005/0112169 A1 5/2005 Brauker et al.
2005/0113648 A1 5/2005 Yang et al.
2005/0113886 A1 5/2005 Fischell et al.
2005/0114068 A1 5/2005 Chey et al.
2005/0115832 A1 6/2005 Simpson et al.
2005/0116683 A1 6/2005 Cheng et al.
2005/0121322 A1 6/2005 Say et al.
2005/0131346 A1 6/2005 Douglas
2005/0134731 A1 6/2005 Lee et al.
2005/0137530 A1 6/2005 Campbell et al.
2005/0143635 A1 6/2005 Kamath et al.
2005/0154271 A1 7/2005 Rasdal et al.
2005/0173245 A1 8/2005 Feldman et al.
2005/0176136 A1 8/2005 Burd et al.
2005/0182306 A1 8/2005 Sloan
2005/0187442 A1 8/2005 Cho et al.
2005/0187720 A1 8/2005 Goode, Jr. et al.
2005/0192557 A1 9/2005 Brauker et al.
2005/0195930 A1 9/2005 Spital et al.
2005/0196821 A1 9/2005 Monfre et al.
2005/0197793 A1 9/2005 Baker, Jr.
2005/0199494 A1 9/2005 Say et al.
2005/0203360 A1 9/2005 Brauker et al.
2005/0204134 A1 9/2005 Von Arx et al.
2005/0211572 A1 9/2005 Buck et al.
2005/0214892 A1 9/2005 Kovatchev et al.
2005/0215871 A1 9/2005 Feldman et al.
2005/0236361 A1 10/2005 Ufer et al.
2005/0239154 A1 10/2005 Feldman et al.
2005/0239156 A1 10/2005 Drucker et al.
2005/0241957 A1 11/2005 Mao et al.
2005/0245795 A1 11/2005 Goode, Jr. et al.
2005/0245799 A1 11/2005 Brauker et al.
2005/0251033 A1 11/2005 Scarantino et al.
2005/0269214 A1 12/2005 Lee
2005/0272985 A1 12/2005 Kotulla et al.
2005/0277164 A1 12/2005 Drucker et al.
2005/0277912 A1 12/2005 John
2005/0287620 A1 12/2005 Heller et al.
2006/0001538 A1 1/2006 Kraft et al.
2006/0001551 A1 1/2006 Kraft et al.
2006/0009727 A1 1/2006 O'Mahony et al.
2006/0010098 A1 1/2006 Goodnow et al.
2006/0015020 A1 1/2006 Neale et al.
2006/0015024 A1 1/2006 Brister et al.
2006/0016700 A1 1/2006 Brister et al.
2006/0017923 A1 1/2006 Ruchti et al.
2006/0019327 A1 1/2006 Brister et al.
2006/0020186 A1 1/2006 Brister et al.
2006/0020187 A1 1/2006 Brister et al.
2006/0020188 A1 1/2006 Kamath et al.
2006/0020189 A1 1/2006 Brister et al.
2006/0020190 A1 1/2006 Kamath et al.
2006/0020191 A1 1/2006 Brister et al.
2006/0020192 A1 1/2006 Brister et al.
2006/0020300 A1 1/2006 Nghiem et al.
2006/0025662 A1 2/2006 Buse et al.
2006/0025663 A1 2/2006 Talbot et al.
2006/0036139 A1 2/2006 Brister et al.
2006/0036140 A1 2/2006 Brister et al.
2006/0036141 A1 2/2006 Kamath et al.
2006/0036142 A1 2/2006 Brister et al.
2006/0036143 A1 2/2006 Brister et al.
2006/0036144 A1 2/2006 Brister et al.
2006/0036145 A1 2/2006 Brister et al.
2006/0058588 A1 3/2006 Zdeblick
2006/0079740 A1 4/2006 Silver et al.
2006/0091006 A1 5/2006 Wang et al.
2006/0142651 A1 6/2006 Brister et al.
2006/0156796 A1 7/2006 Burke et al.
2006/0166629 A1 7/2006 Reggiardo
2006/0169599 A1 8/2006 Feldman et al.
2006/0173444 A1 8/2006 Choy et al.
2006/0183984 A1 8/2006 Dobbles et al.
2006/0189851 A1 8/2006 Tvig et al.
2006/0189863 A1 8/2006 Peyser et al.
2006/0193375 A1 8/2006 Lee
2006/0202805 A1 9/2006 Schulman et al.
2006/0211072 A1 9/2006 Ryan et al.
2006/0222566 A1 10/2006 Brauker et al.
2006/0224141 A1 10/2006 Rush et al.
2006/0226985 A1 10/2006 Goodnow et al.
2006/0229512 A1 10/2006 Petisce et al.
2006/0233839 A1 10/2006 Jacquet
2006/0247508 A1 11/2006 Fennell
2006/0247710 A1 11/2006 Goetz et al.
2006/0247985 A1 11/2006 Liamos et al.
2006/0253085 A1 11/2006 Geismar et al.
2006/0253086 A1 11/2006 Moberg et al.
2006/0253296 A1 11/2006 Liisberg et al.
2006/0258929 A1 11/2006 Goode et al.
2006/0281985 A1 12/2006 Ward et al.
2006/0287591 A1 12/2006 Ocvirk et al.
2006/0287691 A1 12/2006 Drew
2006/0290496 A1 12/2006 Peeters et al.
2006/0293576 A1 12/2006 Van Antwerp et al.
2006/0293607 A1 12/2006 Alt et al.
2007/0007133 A1 1/2007 Mang et al.
2007/0010950 A1 1/2007 Abensour et al.
2007/0017983 A1 1/2007 Frank et al.
2007/0027381 A1 2/2007 Stafford
2007/0027507 A1 2/2007 Burdett et al.
2007/0032706 A1 2/2007 Kamath et al.
2007/0032717 A1 2/2007 Brister et al.
2007/0038044 A1 2/2007 Dobbles et al.
2007/0056858 A1 3/2007 Chen et al.
2007/0060803 A1 3/2007 Liljeryd et al.
2007/0060814 A1 3/2007 Stafford
2007/0060869 A1 3/2007 Tolle et al.
2007/0060979 A1 3/2007 Strother et al.
2007/0066873 A1 3/2007 Kamath et al.
2007/0066956 A1 3/2007 Finkel
2007/0068807 A1 3/2007 Feldman et al.
2007/0073129 A1 3/2007 Shah et al.
2007/0078320 A1 4/2007 Stafford
2007/0078321 A1 4/2007 Mazza et al.
2007/0078322 A1 4/2007 Stafford
2007/0093786 A1 4/2007 Goldsmith et al.
2007/0094216 A1 4/2007 Mathias et al.
2007/0095661 A1 5/2007 Wang et al.
2007/0106135 A1 5/2007 Sloan et al.
2007/0108048 A1 5/2007 Wang et al.
2007/0118030 A1 5/2007 Bruce et al.
2007/0118405 A1 5/2007 Campbell et al.
2007/0129621 A1 6/2007 Kellogg et al.
2007/0135696 A1 6/2007 Ward
2007/0135698 A1 6/2007 Shah et al.
2007/0149875 A1 6/2007 Ouyang et al.
2007/0153705 A1 7/2007 Rosar et al.
2007/0156033 A1 7/2007 Causey, III et al.
2007/0156094 A1 7/2007 Safabash et al.
2007/0161880 A1 7/2007 Say et al.
2007/0163880 A1 7/2007 Woo et al.
2007/0173706 A1 7/2007 Neinast et al.
2007/0173709 A1 7/2007 Petisce et al.
2007/0173710 A1 7/2007 Petisce et al.
2007/0173711 A1 7/2007 Shah et al.
2007/0191701 A1 8/2007 Feldman et al.
2007/0191702 A1 8/2007 Yodfat et al.
2007/0199818 A1 8/2007 Petyt et al.
2007/0202562 A1 8/2007 Curry et al.
2007/0203407 A1 8/2007 Hoss et al.
2007/0203966 A1 8/2007 Brauker et al.
2007/0208244 A1 9/2007 Brauker et al.
2007/0208246 A1 9/2007 Brauker et al.
2007/0213657 A1 9/2007 Jennewine et al.
2007/0219496 A1 9/2007 Kamen et al.
2007/0227911 A1 10/2007 Wang et al.
2007/0228071 A1 10/2007 Kamen et al.
2007/0232878 A1 10/2007 Kovatchev et al.

(56) **References Cited**

U.S. PATENT DOCUMENTS

2007/0233013 A1 10/2007 Schoenberg et al.
2007/0235331 A1 10/2007 Simpson et al.
2007/0244379 A1 10/2007 Boock et al.
2007/0244383 A1 10/2007 Talbot et al.
2007/0249922 A1 10/2007 Peyser et al.
2007/0255321 A1 11/2007 Gelber et al.
2007/0255348 A1 11/2007 Holtzclaw
2007/0255531 A1 11/2007 Drew
2007/0258395 A1 11/2007 Jollota et al.
2007/0271285 A1 11/2007 Eichorn et al.
2007/0299617 A1 12/2007 Willis
2008/0004515 A1 1/2008 Jennewine et al.
2008/0004601 A1 1/2008 Jennewine et al.
2008/0009692 A1 1/2008 Stafford
2008/0012701 A1 1/2008 Kass et al.
2008/0017522 A1 1/2008 Heller et al.
2008/0019869 A1 1/2008 Nakamura et al.
2008/0021436 A1 1/2008 Wolpert et al.
2008/0021666 A1 1/2008 Goode, Jr. et al.
2008/0021972 A1 1/2008 Huelskamp et al.
2008/0029391 A1 2/2008 Mao et al.
2008/0030369 A1 2/2008 Mann et al.
2008/0033254 A1 2/2008 Kamath et al.
2008/0039702 A1 2/2008 Hayter et al.
2008/0045824 A1 2/2008 Tapsak et al.
2008/0057484 A1 3/2008 Miyata et al.
2008/0058625 A1 3/2008 McGarraugh et al.
2008/0058626 A1 3/2008 Miyata et al.
2008/0058678 A1 3/2008 Miyata et al.
2008/0058773 A1 3/2008 John
2008/0060955 A1 3/2008 Goodnow
2008/0061961 A1 3/2008 John
2008/0064937 A1 3/2008 McGarraugh et al.
2008/0064943 A1 3/2008 Talbot et al.
2008/0066305 A1 3/2008 Wang et al.
2008/0071156 A1 3/2008 Brister et al.
2008/0071157 A1 3/2008 McGarraugh et al.
2008/0071158 A1 3/2008 McGarraugh et al.
2008/0071328 A1 3/2008 Haubrich et al.
2008/0077048 A1 3/2008 Escutia et al.
2008/0081977 A1 4/2008 Hayter et al.
2008/0083617 A1 4/2008 Simpson et al.
2008/0086042 A1 4/2008 Brister et al.
2008/0086044 A1 4/2008 Brister et al.
2008/0086273 A1 4/2008 Shults et al.
2008/0092638 A1 4/2008 Brenneman et al.
2008/0102441 A1 5/2008 Chen et al.
2008/0108942 A1 5/2008 Brister et al.
2008/0114228 A1 5/2008 McCluskey et al.
2008/0119703 A1 5/2008 Brister et al.
2008/0119705 A1 5/2008 Patel et al.
2008/0139910 A1 6/2008 Mastrototaro et al.
2008/0148873 A1 6/2008 Wang
2008/0156662 A1 7/2008 Wu et al.
2008/0161664 A1 7/2008 Mastrototaro et al.
2008/0161666 A1 7/2008 Feldman et al.
2008/0172205 A1 7/2008 Breton et al.
2008/0177149 A1 7/2008 Weinert et al.
2008/0177165 A1 7/2008 Blomquist et al.
2008/0182537 A1 7/2008 Manku et al.
2008/0183061 A1 7/2008 Goode, Jr. et al.
2008/0183399 A1 7/2008 Goode, Jr. et al.
2008/0188731 A1 8/2008 Brister et al.
2008/0189051 A1 8/2008 Goode, Jr. et al.
2008/0194934 A1 8/2008 Ray et al.
2008/0194935 A1 8/2008 Brister et al.
2008/0194936 A1 8/2008 Goode, Jr. et al.
2008/0194937 A1 8/2008 Goode, Jr. et al.
2008/0194938 A1 8/2008 Brister et al.
2008/0195049 A1 8/2008 Thalmann et al.
2008/0195232 A1 8/2008 Carr-Brendel et al.
2008/0195967 A1 8/2008 Goode, Jr. et al.
2008/0197024 A1 8/2008 Simpson et al.
2008/0200788 A1 8/2008 Brister et al.
2008/0200789 A1 8/2008 Brister et al.
2008/0200791 A1 8/2008 Simpson et al.
2008/0200897 A1 8/2008 Hoss et al.
2008/0201325 A1 8/2008 Doniger et al.
2008/0208025 A1 8/2008 Shults et al.
2008/0208026 A1 8/2008 Noujaim et al.
2008/0314395 A1 8/2008 Kovatchev et al.
2008/0214900 A1 9/2008 Fennell et al.
2008/0214910 A1 9/2008 Buck
2008/0214915 A1 9/2008 Brister et al.
2008/0214918 A1 9/2008 Brister et al.
2008/0228051 A1 9/2008 Shults et al.
2008/0228054 A1 9/2008 Shults et al.
2008/0234663 A1 9/2008 Yodfat et al.
2008/0234943 A1 9/2008 Ray et al.
2008/0235469 A1 9/2008 Drew
2008/0242961 A1 10/2008 Brister et al.
2008/0242963 A1 10/2008 Essenpreis et al.
2008/0254544 A1 10/2008 Modzelewski et al.
2008/0255438 A1 10/2008 Saidara et al.
2008/0262469 A1 10/2008 Brister et al.
2008/0267823 A1 10/2008 Wang et al.
2008/0269714 A1 10/2008 Mastrototaro et al.
2008/0269723 A1 10/2008 Mastrototaro et al.
2008/0275313 A1 11/2008 Brister et al.
2008/0281178 A1 11/2008 Chaung et al.
2008/0287761 A1 11/2008 Hayter
2008/0287762 A1 11/2008 Hayter
2008/0287764 A1 11/2008 Rasdal et al.
2008/0287765 A1 11/2008 Rasdal et al.
2008/0287766 A1 11/2008 Rasdal et al.
2008/0294024 A1 11/2008 Cosentino et al.
2008/0296155 A1 12/2008 Shults et al.
2008/0300572 A1 12/2008 Rankers et al.
2008/0306368 A1 12/2008 Goode, Jr. et al.
2008/0306434 A1 12/2008 Dobbles et al.
2008/0306435 A1 12/2008 Kamath et al.
2008/0306444 A1 12/2008 Brister et al.
2008/0312518 A1 12/2008 Jina et al.
2008/0312844 A1 12/2008 Hayter et al.
2008/0319085 A1 12/2008 Wright et al.
2008/0319279 A1 12/2008 Ramsay et al.
2008/0319295 A1 12/2008 Bernstein et al.
2009/0005665 A1 1/2009 Hayter et al.
2009/0005666 A1 1/2009 Shin et al.
2009/0005729 A1 1/2009 Hendrixson et al.
2009/0006061 A1 1/2009 Thukral et al.
2009/0012376 A1 1/2009 Agus
2009/0012379 A1 1/2009 Goode, Jr. et al.
2009/0018424 A1 1/2009 Kamath et al.
2009/0018425 A1 1/2009 Ouyang et al.
2009/0020502 A1 1/2009 Bhullar et al.
2009/0030293 A1 1/2009 Cooper et al.
2009/0030294 A1 1/2009 Petisce et al.
2009/0036758 A1 2/2009 Brauker et al.
2009/0036763 A1 2/2009 Brauker et al.
2009/0040022 A1 2/2009 Finkenzeller
2009/0043181 A1 2/2009 Brauker et al.
2009/0043182 A1 2/2009 Brauker et al.
2009/0043525 A1 2/2009 Brauker et al.
2009/0043541 A1 2/2009 Brauker et al.
2009/0043542 A1 2/2009 Brauker et al.
2009/0045055 A1 2/2009 Rhodes et al.
2009/0048503 A1 2/2009 Dalal et al.
2009/0054745 A1 2/2009 Jennewine et al.
2009/0054747 A1 2/2009 Fennell
2009/0054748 A1 2/2009 Feldman et al.
2009/0054753 A1 2/2009 Robinson et al.
2009/0062633 A1 3/2009 Brauker et al.
2009/0062635 A1 3/2009 Brauker et al.
2009/0063187 A1 3/2009 Johnson et al.
2009/0069750 A1 3/2009 Schraga
2009/0076356 A1 3/2009 Simpson et al.
2009/0076360 A1 3/2009 Brister et al.
2009/0076361 A1 3/2009 Kamath et al.
2009/0082693 A1 3/2009 Stafford
2009/0085768 A1 4/2009 Patel et al.
2009/0085873 A1 4/2009 Betts et al.
2009/0093687 A1 4/2009 Telfort et al.
2009/0093695 A1 4/2009 Nakamura et al.

(56) **References Cited**

U.S. PATENT DOCUMENTS

2009/0099436 A1 4/2009 Brister et al.
2009/0102678 A1 4/2009 Mazza et al.
2009/0105568 A1 4/2009 Bugler
2009/0105570 A1 4/2009 Sloan et al.
2009/0105571 A1 4/2009 Fennell et al.
2009/0105636 A1 4/2009 Hayter et al.
2009/0112478 A1 4/2009 Mueller, Jr. et al.
2009/0112626 A1 4/2009 Talbot et al.
2009/0124877 A1 5/2009 Goode, Jr. et al.
2009/0124878 A1 5/2009 Goode, Jr. et al.
2009/0124879 A1 5/2009 Brister et al.
2009/0124964 A1 5/2009 Leach et al.
2009/0131768 A1 5/2009 Simpson et al.
2009/0131769 A1* 5/2009 Leach A61B 5/6848 600/309
2009/0131776 A1 5/2009 Simpson et al.
2009/0131777 A1 5/2009 Simpson et al.
2009/0131860 A1 5/2009 Nielsen
2009/0137886 A1 5/2009 Shariati et al.
2009/0137887 A1 5/2009 Shariati et al.
2009/0143659 A1 6/2009 Li et al.
2009/0143660 A1 6/2009 Brister et al.
2009/0145775 A1 6/2009 Chu et al.
2009/0149728 A1 6/2009 Van Antwerp et al.
2009/0150186 A1 6/2009 Cohen et al.
2009/0156919 A1 6/2009 Brister et al.
2009/0156920 A1 6/2009 Kotzan et al.
2009/0156924 A1 6/2009 Shariati et al.
2009/0163789 A1* 6/2009 Say C12Q 1/54 600/345
2009/0163790 A1 6/2009 Brister et al.
2009/0163791 A1 6/2009 Brister et al.
2009/0163855 A1 6/2009 Shin et al.
2009/0177068 A1 7/2009 Stivoric et al.
2009/0178459 A1 7/2009 Li et al.
2009/0182217 A1 7/2009 Li et al.
2009/0192366 A1 7/2009 Mensinger et al.
2009/0192380 A1 7/2009 Shariati et al.
2009/0192722 A1 7/2009 Shariati et al.
2009/0192724 A1 7/2009 Brauker et al.
2009/0192745 A1 7/2009 Kamath et al.
2009/0192751 A1 7/2009 Kamath et al.
2009/0203981 A1 8/2009 Brauker et al.
2009/0204341 A1 8/2009 Brauker et al.
2009/0216100 A1 8/2009 Ebner et al.
2009/0216103 A1 8/2009 Brister et al.
2009/0227855 A1 9/2009 Hill et al.
2009/0240120 A1 9/2009 Mensinger et al.
2009/0240128 A1 9/2009 Mensinger et al.
2009/0240193 A1 9/2009 Mensinger et al.
2009/0240440 A1 9/2009 Shurabura et al.
2009/0242399 A1 10/2009 Kamath et al.
2009/0242425 A1 10/2009 Kamath et al.
2009/0247855 A1 10/2009 Boock et al.
2009/0247856 A1 10/2009 Boock et al.
2009/0247857 A1 10/2009 Harper et al.
2009/0247931 A1 10/2009 Damgaard-Sorensen
2009/0259118 A1 10/2009 Feldman et al.
2009/0275817 A1 11/2009 Feldman et al.
2009/0281406 A1 11/2009 McGarraugh et al.
2009/0287073 A1 11/2009 Boock et al.
2009/0287074 A1 11/2009 Shults et al.
2009/0292188 A1 11/2009 Hoss et al.
2009/0294277 A1 12/2009 Thomas et al.
2009/0296742 A1 12/2009 Sicurello et al.
2009/0298182 A1 12/2009 Schulat et al.
2009/0299155 A1 12/2009 Yang et al.
2009/0299156 A1 12/2009 Simpson et al.
2009/0299162 A1 12/2009 Brauker et al.
2009/0299276 A1 12/2009 Brauker et al.
2010/0010324 A1 1/2010 Brauker et al.
2010/0010329 A1 1/2010 Taub et al.
2010/0010331 A1 1/2010 Brauker et al.
2010/0010332 A1 1/2010 Brauker et al.
2010/0016687 A1 1/2010 Brauker et al.
2010/0016698 A1 1/2010 Rasdal et al.
2010/0022855 A1 1/2010 Brauker et al.
2010/0022988 A1 1/2010 Wochner et al.
2010/0030038 A1 2/2010 Brauker et al.
2010/0030053 A1 2/2010 Goode, Jr. et al.
2010/0030484 A1 2/2010 Brauker et al.
2010/0030485 A1 2/2010 Brauker et al.
2010/0036215 A1 2/2010 Goode, Jr. et al.
2010/0036216 A1 2/2010 Goode, Jr. et al.
2010/0036222 A1 2/2010 Goode, Jr. et al.
2010/0036223 A1 2/2010 Goode, Jr. et al.
2010/0036225 A1 2/2010 Goode, Jr. et al.
2010/0041971 A1 2/2010 Goode, Jr. et al.
2010/0045465 A1 2/2010 Brauker et al.
2010/0049024 A1 2/2010 Saint et al.
2010/0063373 A1 3/2010 Kamath et al.
2010/0064764 A1 3/2010 Hayter et al.
2010/0076283 A1 3/2010 Simpson et al.
2010/0081908 A1 4/2010 Dobbles et al.
2010/0081909 A1 4/2010 Budiman et al.
2010/0081910 A1 4/2010 Brister et al.
2010/0081953 A1 4/2010 Syeda-Mahmood et al.
2010/0087724 A1 4/2010 Brauker et al.
2010/0094111 A1 4/2010 Heller et al.
2010/0094251 A1 4/2010 Estes et al.
2010/0096259 A1 4/2010 Zhang et al.
2010/0099970 A1 4/2010 Shults et al.
2010/0099971 A1 4/2010 Shults et al.
2010/0105999 A1 4/2010 Dixon et al.
2010/0119693 A1 5/2010 Tapsak et al.
2010/0121167 A1 5/2010 McGarraugh et al.
2010/0121169 A1 5/2010 Petisce et al.
2010/0141656 A1 6/2010 Krieftewirth
2010/0152554 A1 6/2010 Steine et al.
2010/0160759 A1 6/2010 Celentano et al.
2010/0168538 A1 7/2010 Keenan et al.
2010/0168546 A1 7/2010 Kamath et al.
2010/0174266 A1 7/2010 Estes
2010/0185175 A1 7/2010 Kamen et al.
2010/0191082 A1 7/2010 Brister et al.
2010/0191085 A1 7/2010 Budiman
2010/0191472 A1 7/2010 Doniger et al.
2010/0198034 A1 8/2010 Thomas et al.
2010/0198142 A1 8/2010 Sloan et al.
2010/0204557 A1 8/2010 Kiaie et al.
2010/0213057 A1 8/2010 Feldman et al.
2010/0213080 A1 8/2010 Celentano et al.
2010/0230285 A1 9/2010 Hoss et al.
2010/0234710 A1 9/2010 Budiman et al.
2010/0261987 A1 10/2010 Kamath et al.
2010/0274111 A1 10/2010 Say et al.
2010/0274515 A1 10/2010 Hoss et al.
2010/0280441 A1 11/2010 Willinska et al.
2010/0313105 A1 12/2010 Nekoomaram et al.
2010/0317952 A1 12/2010 Budiman et al.
2010/0324392 A1 12/2010 Yee et al.
2010/0326842 A1 12/2010 Mazza et al.
2011/0004085 A1 1/2011 Mensinger et al.
2011/0021889 A1 1/2011 Hoss et al.
2011/0024043 A1 2/2011 Boock et al.
2011/0024307 A1 2/2011 Simpson et al.
2011/0027127 A1 2/2011 Simpson et al.
2011/0027453 A1 2/2011 Boock et al.
2011/0027458 A1 2/2011 Boock et al.
2011/0028815 A1 2/2011 Simpson et al.
2011/0028816 A1 2/2011 Simpson et al.
2011/0031986 A1 2/2011 Bhat et al.
2011/0040163 A1 2/2011 Telson et al.
2011/0077490 A1 3/2011 Simpson et al.
2011/0077494 A1 3/2011 Doniger et al.
2011/0082484 A1 4/2011 Saravia et al.
2011/0097090 A1 4/2011 Cao
2011/0106126 A1 5/2011 Love et al.
2011/0112696 A1 5/2011 Yodfat et al.
2011/0148905 A1 6/2011 Simmons et al.
2011/0190603 A1 8/2011 Stafford
2011/0191044 A1 8/2011 Stafford
2011/0208027 A1 8/2011 Wagner et al.
2011/0213225 A1 9/2011 Bernstein et al.

(56) **References Cited**

U.S. PATENT DOCUMENTS

2011/0257495	A1	10/2011	Hoss et al.
2011/0257895	A1	10/2011	Brauker et al.
2011/0263958	A1	10/2011	Brauker et al.
2011/0282327	A1	11/2011	Kellogg et al.
2011/0287528	A1	11/2011	Fern et al.
2011/0288574	A1	11/2011	Curry et al.
2011/0289497	A1	11/2011	Kiaie et al.
2011/0319729	A1	12/2011	Donnay et al.
2011/0320130	A1	12/2011	Valdes et al.
2011/0320167	A1	12/2011	Budiman
2012/0010642	A1	1/2012	Lee et al.
2012/0078071	A1	3/2012	Bohm et al.
2012/0108934	A1	5/2012	Valdes et al.
2012/0165626	A1	6/2012	Irina et al.
2012/0165640	A1	6/2012	Galley et al.
2012/0173200	A1	7/2012	Breton et al.
2012/0190989	A1	7/2012	Kaiser et al.
2012/0226121	A1	9/2012	Kamath et al.
2013/0035575	A1	2/2013	Mayou et al.
2013/0225959	A1	8/2013	Bugler
2013/0231541	A1	9/2013	Hayter et al.
2013/0235166	A1	9/2013	Jones et al.
2013/0324823	A1	12/2013	Koski et al.
2014/0005499	A1	1/2014	Catt et al.
2014/0046160	A1	2/2014	Terashima et al.
2015/0241407	A1	8/2015	Ou et al.

FOREIGN PATENT DOCUMENTS

EP	0127958	12/1984
EP	0320109	6/1989
EP	0353328	2/1990
EP	0390390	10/1990
EP	0396788	11/1990
EP	0286118	1/1995
EP	1048264	11/2000
EP	2335584	6/2011
JP	2003-503090	1/2003
JP	2004-520898	7/2004
JP	2005-265838	9/2005
JP	2007-040963	2/2007
JP	2008-506468	3/2008
JP	2011-505834	3/2011
WO	WO-1996/025089	8/1996
WO	WO-1996/035370	11/1996
WO	WO-1999/060391	11/1999
WO	WO-2000/049940	8/2000
WO	WO-2000/059370	10/2000
WO	WO-2001/052935	7/2001
WO	WO-2001/054753	8/2001
WO	WO-2002/016905	2/2002
WO	WO-2003/076893	9/2003
WO	WO-2003/082091	10/2003
WO	WO-2006/024671	3/2006
WO	WO-2006/085087	8/2006

OTHER PUBLICATIONS

European Patent Application No. 10802926.5, Examination Report dated Dec. 22, 2017.

Armour, J. C., et al., "Application of Chronic Intravascular Blood Glucose Sensor in Dogs", *Diabetes*, vol. 39, 1990, pp. 1519-1526.

Bennion, N., et al., "Alternate Site Glucose Testing: A Crossover Design", *Diabetes Technology & Therapeutics*, vol. 4, No. 1, 2002, pp. 25-33.

Blank, T. B., et al., "Clinical Results From a Non-Invasive Blood Glucose Monitor", *Optical Diagnostics and Sensing of Biological Fluids and Glucose and Cholesterol Monitoring II, Proceedings of SPIE*, vol. 4624, 2002, pp. 1-10.

Bremer, T. M., et al., "Benchmark Data from the Literature for Evaluation of New Glucose Sensing Technologies", *Diabetes Technology & Therapeutics*, vol. 3, No. 3, 2001, pp. 409-418.

Brooks, S. L., et al., "Development of an On-Line Glucose Sensor for Fermentation Monitoring", *Biosensors*, vol. 3, 1987/88, pp. 45-56.

Cass, A. E., et al., "Ferrocene-Medicated Enzyme Electrode for Amperometric Determination of Glucose", *Analytical Chemistry*, vol. 56 No. 4, 1984, 667-671.

Cheyne, E. H., et al., "Performance of a Continuous Glucose Monitoring System During Controlled Hypoglycaemia in Healthy Volunteers", *Diabetes Technology & Therapeutics*, vol. 4, No. 5, 2002, pp. 607-613.

Csoregi, E., et al., "Design and Optimization of a Selective Subcutaneously Implantable Glucose Electrode Based on 'Wired' Glucose Oxidase", *Analytical Chemistry*, vol. 67, No. 7, 1995, pp. 1240-1244.

Feldman, B., et al., "A Continuous Glucose Sensor Based on Wired Enzyme™ Technology—Results from a 3-Day Trial in Patients with Type 1 Diabetes", *Diabetes Technology & Therapeutics*, vol. 5, No. 5, 2003, pp. 769-779.

Feldman, B., et al., "Correlation of Glucose Concentrations in Interstitial Fluid and Venous Blood During Periods of Rapid Glucose Change", *Abbott Diabetes Care, Inc. Freestyle Navigator Continuous Glucose Monitor Pamphlet*, 2004.

Isermann, R., "Supervision, Fault-Detection and Fault-Diagnosis Methods—An Introduction", *Control Engineering Practice*, vol. 5, No. 5, 1997, pp. 639-652.

Isermann, R., et al., "Trends in the Application of Model-Based Fault Detection and Diagnosis of Technical Processes", *Control Engineering Practice*, vol. 5, No. 5, 1997, pp. 709-719.

Jobst, G., et al., "Thin-Film Microbiosensors for Glucose-Lactate Monitoring", *Analytical Chemistry*, vol. 68, No. 18, 1996, pp. 3173-3179.

Johnson, P. C., "Peripheral Circulation", John Wiley & Sons, 1978, pp. 198.

Jungheim, K., et al., "How Rapid Does Glucose Concentration Change in Daily Life of Patients with Type 1 Diabetes?", 2002, pp. 250.

Jungheim, K., et al., "Risky Delay of Hypoglycemia Detection by Glucose Monitoring at the Arm", *Diabetes Care*, vol. 24, No. 7, 2001, pp. 1303-1304.

Kaplan, S. M., "Wiley Electrical and Electronics Engineering Dictionary", *IEEE Press*, 2004, pp. 141, 142, 548, 549.

Kuure-Kinsey, M., et al., "A Dual-Rate Kalman Filter for Continuous Glucose Monitoring", *Proceedings of the 28th IEEE, EMBS Annual International Conference*, New York City, Aug. 30 to Sep. 3, 2006, pp. 63-66.

Lodwig, V., et al., "Continuous Glucose Monitoring with Glucose Sensors: Calibration and Assessment Criteria", *Diabetes Technology & Therapeutics*, vol. 5, No. 4, 2003, pp. 573-587.

Lortz, J., et al., "What is Bluetooth? We Explain the Newest Short-Range Connectivity Technology", *Smart Computing Learning Series, Wireless Computing*, vol. 8, Issue 5, 2002, pp. 72-74.

Malin, S. F., et al., "Noninvasive Prediction of Glucose by Near-Infrared Diffuse Reflectance Spectoscopy", *Clinical Chemistry*, vol. 45, No. 9, 1999, pp. 1651-1658.

Mcgarraugh, G., et al., "Glucose Measurements Using Blood Extracted from the Forearm and the Finger", TheraSense, Inc., 2001, 16 Pages.

Mcgarraugh, G., et al., "Physiological Influences on Off-Finger Glucose Testing", *Diabetes Technology & Therapeutics*, vol. 3, No. 3, 2001, pp. 367-376.

Mckean, B. D., et al., "A Telemetry-Instrumentation System for Chronically Implanted Glucose and Oxygen Sensors", *IEEE Transactions on Biomedical Engineering*, vol. 35, No. 7, 1988, pp. 526-532.

Morbiducci, U, et al., "Improved Usability of the Minimal Model of Insulin Sensitivity Based on an Automated Approach and Genetic Algorithms for Parameter Estimation", *Clinical Science*, vol. 112, Feb. 2007, pp. 257-263.

Mougiakakou, et al., "A Real Time Simulation Model of Glucose-Insulin Metabolism for Type 1 Diabetes Patients", *Proceedings of the 2005 IEEE*, 2005, pp. 298-301.

(56) **References Cited**

OTHER PUBLICATIONS

Panteleon, A. E., et al., "The Role of the Independent Variable to Glucose Sensor Calibration", *Diabetes Technology & Therapeutics*, vol. 5, No. 3, 2003, pp. 401-410.
Parker, R., et al., "Robust H∞ Glucose Control in Diabetes Using a Physiological Model", *AIChE Journal*, vol. 46, No. 12, 2000, pp. 2537-2549.
Pickup, J., et al., "Implantable Glucose Sensors: Choosing the Appropriate Sensing Strategy", *Biosensors*, vol. 3, 1987/88, pp. 335-346.
Pickup, J., et al., "In Vivo Molecular Sensing in Diabetes Mellitus: An Implantable Glucose Sensor with Direct Electron Transfer", *Diabetologia*, vol. 32, 1989, pp. 213-217.
Pishko, M. V., et al., "Amperometric Glucose Microelectrodes Prepared Through Immobilization of Glucose Oxidase in Redox Hydrogels", *Analytical Chemistry*, vol. 63, No. 20, 1991, pp. 2268-2272.
Quinn, C. P., et al., "Kinetics of Glucose Delivery to Subcutaneous Tissue in Rats Measured with 0.3-mm Amperometric Microsensors", *The American Physiological Society*, 1995, E155-E161.
Roe, J. N., et al., "Bloodless Glucose Measurements", *Critical Review in Therapeutic Drug Carrier Systems*, vol. 15, Issue 3, 1998, pp. 199-241.
Sakakida, M., et al., "Development of Ferrocene-Mediated Needle-Type Glucose Sensor as a Measure of True Subcutaneous Tissue Glucose Concentrations", *Artificial Organs Today*, vol. 2, No. 2, 1992, pp. 145-158.
Sakakida, M., et al., "Ferrocene-Mediated Needle-Type Glucose Sensor Covered with Newly Designed Biocompatible Membrane", *Sensors and Actuators B*, vol. 13-14, 1993, pp. 319-322.
Salehi, C., et al., "A Telemetry-Instrumentation System for Long-Term Implantable Glucose and Oxygen Sensors", *Analytical Letters*, vol. 29, No. 13, 1996, pp. 2289-2308.
Schmidtke, D. W., et al., "Measurement and Modeling of the Transient Difference Between Blood and Subcutaneous Glucose Concentrations in the Rat After Injection of Insulin", *Proceedings of the National Academy of Sciences*, vol. 95, 1998, pp. 294-299.
Shaw, G. W., et al., "In Vitro Testing of a Simply Constructed, Highly Stable Glucose Sensor Suitable for Implantation in Diabetic Patients", *Biosensors & Bioelectronics*, vol. 6, 1991, pp. 401-406.
Shichiri, M., et al., "Glycaemic Control in Pancreatectomized Dogs with a Wearable Artificial Endocrine Pancreas", *Diabetologia*, vol. 24, 1983, pp. 179-184.
Shichiri, M., et al., "In Vivo Characteristics of Needle-Type Glucose Sensor—Measurements of Subcutaneous Glucose Concentrations in Human Volunteers", *Hormone and Metabolic Research Supplement Series*, vol. 20, 1988, pp. 17-20.
Shichiri, M., et al., "Membrane Design for Extending the Long-Life of an Implantable Glucose Sensor", *Diabetes Nutrition and Metabolism*, vol. 2, 1989, pp. 309-313.
Shichiri, M., et al., "Needle-type Glucose Sensor for Wearable Artificial Endocrine Pancreas", *Implantable Sensors for Closed-Loop Prosthetic Systems*, Chapter 15, 1985, pp. 197-210.
Shichiri, M., et al., "Telemetry Glucose Monitoring Device With Needle-Type Glucose Sensor: A Useful Tool for Blood Glucose Monitoring in Diabetic Individuals", *Diabetes Care*, vol. 9, No. 3, 1986, pp. 298-301.
Shichiri, M., et al., "Wearable Artificial Endocrine Pancreas With Needle-Type Glucose Sensor", *The Lancet*, 1982, pp. 1129-1131.
Shults, M. C., et al., "A Telemetry-Instrumentation System for Monitoring Multiple Subcutaneously Implanted Glucose Sensors", *IEEE Transactions on Biomedical Engineering*, vol. 41, No. 10, 1994, pp. 937-942.
Sternberg, R., et al., "Study and Development of Multilayer Needle-Type Enzyme-Based Glucose Microsensors", *Biosensors*, vol. 4, 1988, pp. 27-40.
Thompson, M., et al., "In Vivo Probes: Problems and Perspectives", *Clinical Biochemistry*, vol. 19, 1986, pp. 255-261.
Turner, A., et al., "Diabetes Mellitus: Biosensors for Research and Management", *Biosensors*, vol. 1, 1985, pp. 85-115.
Updike, S. J., et al., "Principles of Long-Term Fully Implanted Sensors with Emphasis on Radiotelemetric Monitoring of Blood Glucose from Inside a Subcutaneous Foreign Body Capsule (FBC)", *Biosensors in the Body: Continuous in vivo Monitoring*, Chapter 4, 1997, pp. 117-137.
Velho, G., et al., "Strategies for Calibrating a Subcutaneous Glucose Sensor", *Biomedica Biochimica Acta*, vol. 48, 1989, pp. 957-964.
Wilson, G. S., et al., "Progress Toward the Development of an Implantable Sensor for Glucose", *Clinical Chemistry*, vol. 38, No. 9, 1992, pp. 1613-1617.
Chinese Patent Application No. 201080018303.6, Original Language and English Translation of Office Action dated Jan. 22, 2014.
Chinese Patent Application No. 201080018303.6, Original Language and English Translation of Office Action dated Jul. 29, 2013.
Chinese Patent Application No. 201080033422.9, Original Language and English Translation of Office Action dated Jun. 9, 2014.
Chinese Patent Application No. 201080033422.9, Original Language and English Translation of Office Action dated Oct. 25, 2013.
Chinese Patent Application No. 201080033422.9, Original Language and English Translation of Office Action dated Sep. 12, 2014.
European Patent Application No. 10746954.6, Extended European Search Report dated Jun. 3, 2014.
European Patent Application No. 10802926.5, Extended European Search Report dated Jun. 3, 2014.
Japanese Patent Application No. 2011-552211, Original Language and English Translation of Decision of Rejection dated Mar. 3, 2015.
Japanese Patent Application No. 2011-552211, Original Language and English Translation of Office Action dated May 27, 2014.
PCT Application No. PCT/US2010/025693, International Preliminary Report on Patentability and Written Opinion of the International Searching Authority dated Sep. 9, 2011.
PCT Application No. PCT/US2010/025693, International Search Report and Written Opinion of the International Searching Authority dated May 12, 2010.
PCT Application No. PCT/US2010/042974, International Preliminary Report on Patentability and Written Opinion of the International Searching Authority dated Feb. 2, 2012.
PCT Application No. PCT/US2010/042974, International Search Report and Written Opinion of the International Searching Authority dated Sep. 15, 2010.
U.S. Appl. No. 12/714,439, Office Action dated Jan. 20, 2016.
U.S. Appl. No. 12/714,439, Office Action dated Jul. 7, 2015.
U.S. Appl. No. 12/714,439, Office Action dated Mar. 1, 2013.
U.S. Appl. No. 12/714,439, Office Action dated Nov. 21, 2013.
U.S. Appl. No. 12/714,439, Office Action dated Sep. 29, 2016.
U.S. Appl. No. 12/842,013, Advisory Action dated Dec. 3, 2015.
U.S. Appl. No. 12/842,013, Advisory Action dated May 5, 2014.
U.S. Appl. No. 12/842,013, Notice of Allowance dated Aug. 22, 2017.
U.S. Appl. No. 12/842,013, Office Action dated Aug. 26, 2015.
U.S. Appl. No. 12/842,013, Office Action dated Feb. 25, 2014.
U.S. Appl. No. 12/842,013, Office Action dated Feb. 7, 2013.
U.S. Appl. No. 12/842,013, Office Action dated Mar. 23, 2016.
U.S. Appl. No. 12/842,013, Office Action dated Nov. 6, 2014.
U.S. Appl. No. 12/842,013, Office Action dated Oct. 28, 2013.
U.S. Appl. No. 12/842,013, Office Action dated Sep. 1, 2016.
U.S. Appl. No. 14/490,519, Office Action dated Feb. 11, 2015.
Extended European Search Report dated May 6, 2020 in Application No. EP 19214506.

* cited by examiner

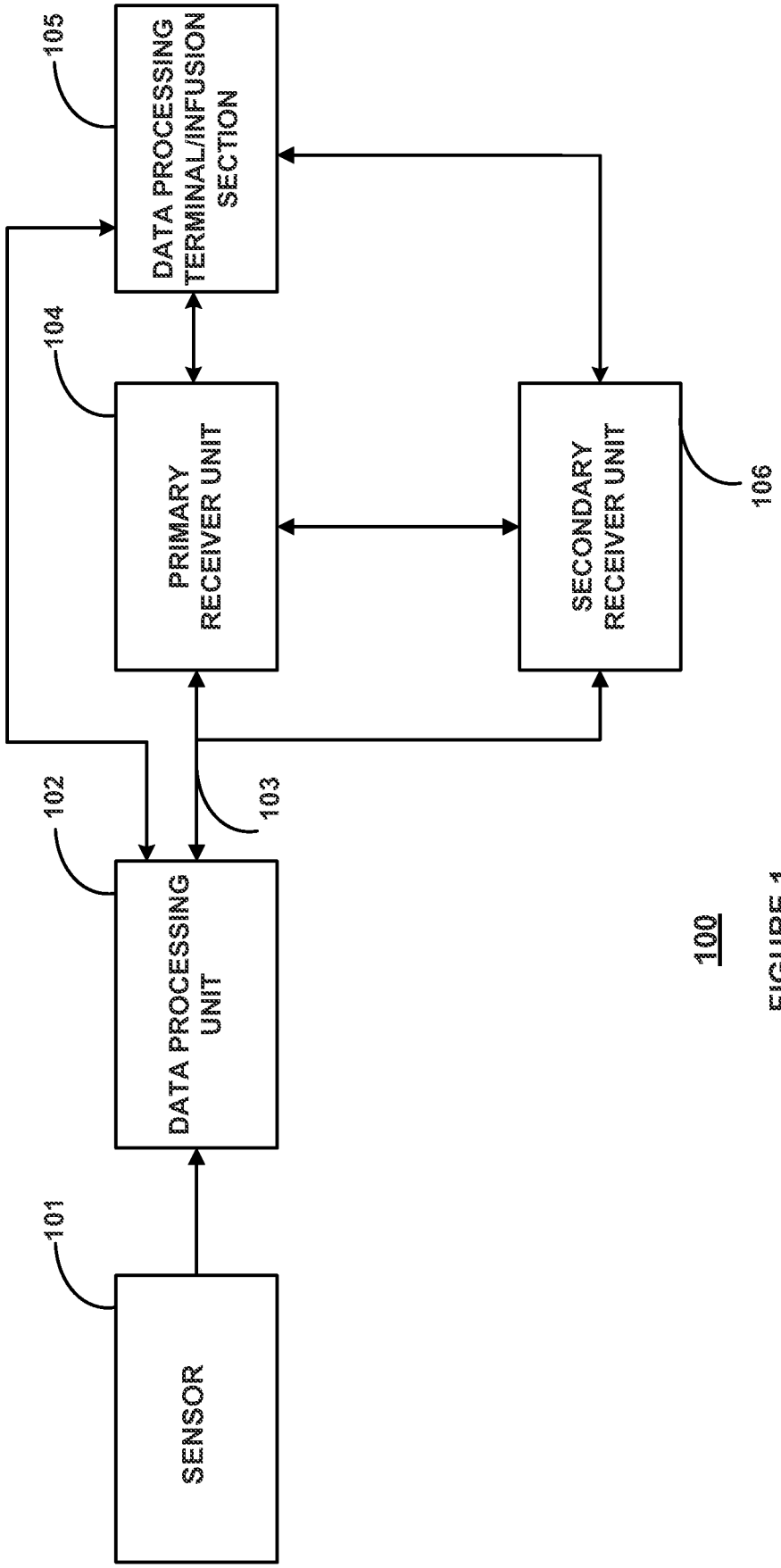
105
DATA PROCESSING TERMINAL/INFUSION SECTION
104
PRIMARY RECEIVER UNIT
SECONDARY RECEIVER UNIT
106
102
103
DATA PROCESSING UNIT
101
SENSOR

100

FIGURE 1

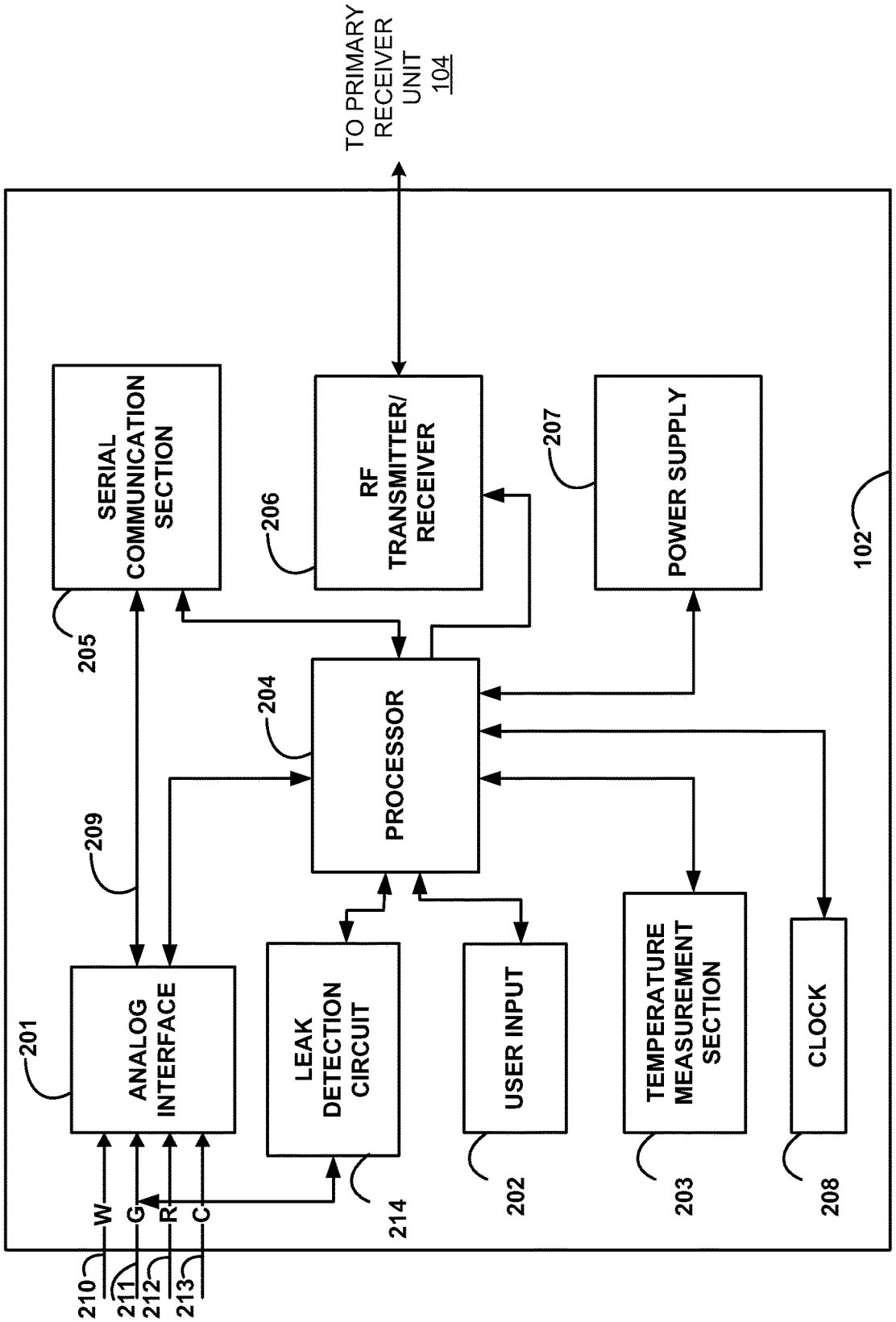
TO PRIMARY RECEIVER UNIT 104
SERIAL COMMUNICATION SECTION
205
RF TRANSMITTER/ RECEIVER
206
POWER SUPPLY
207
102
PROCESSOR
204
209
ANALOG INTERFACE
201
LEAK DETECTION CIRCUIT
214
USER INPUT
202
TEMPERATURE MEASUREMENT SECTION
203
CLOCK
208
W
G
R
C
210
211
212
213

FIGURE 2

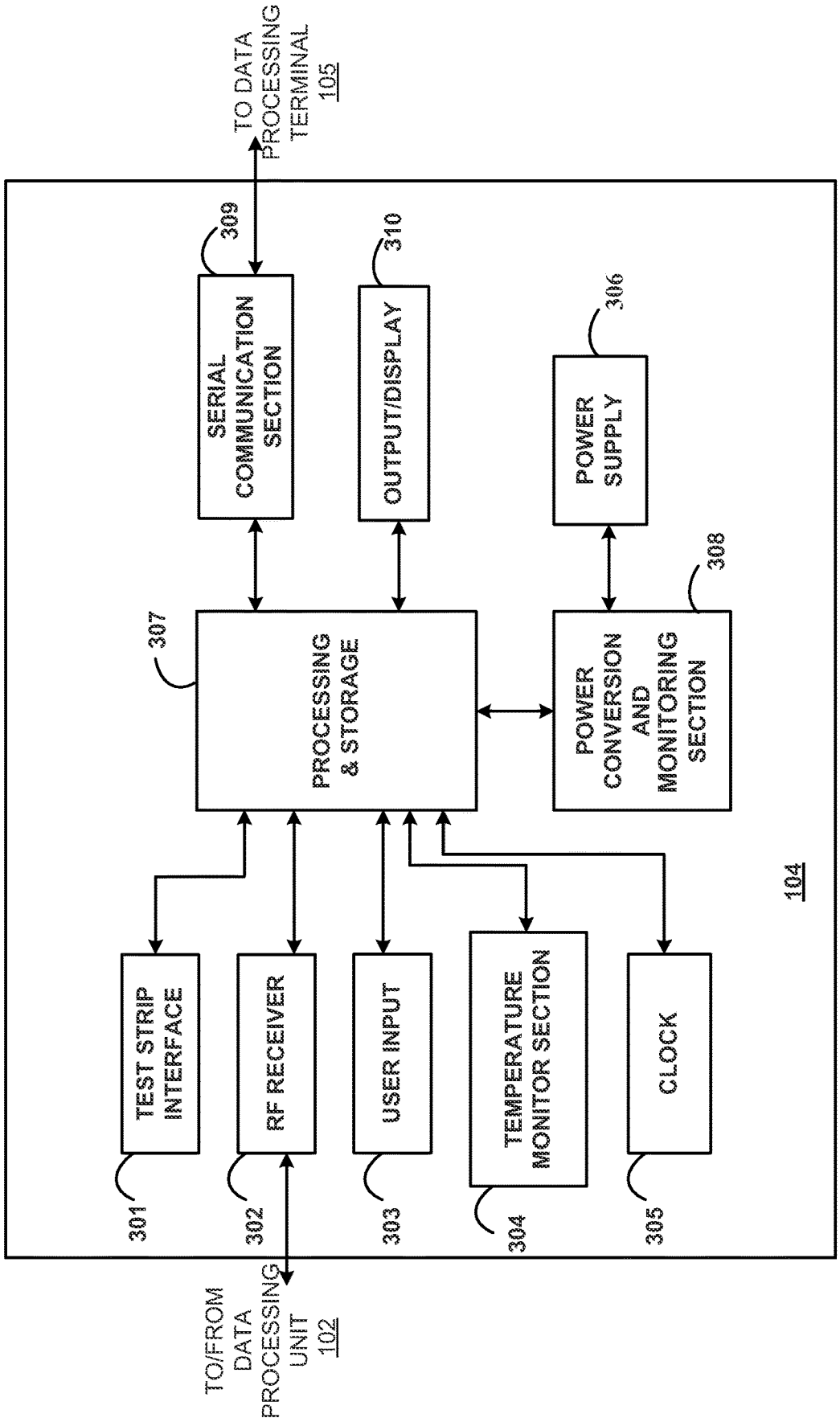
TO DATA PROCESSING TERMINAL 105
309
SERIAL COMMUNICATION SECTION
310
OUTPUT/DISPLAY
306
POWER SUPPLY
307
PROCESSING & STORAGE
308
POWER CONVERSION AND MONITORING SECTION
104
TEST STRIP INTERFACE
RF RECEIVER
USER INPUT
TEMPERATURE MONITOR SECTION
CLOCK
301
302
303
304
305
TO/FROM DATA PROCESSING UNIT 102

FIGURE 3

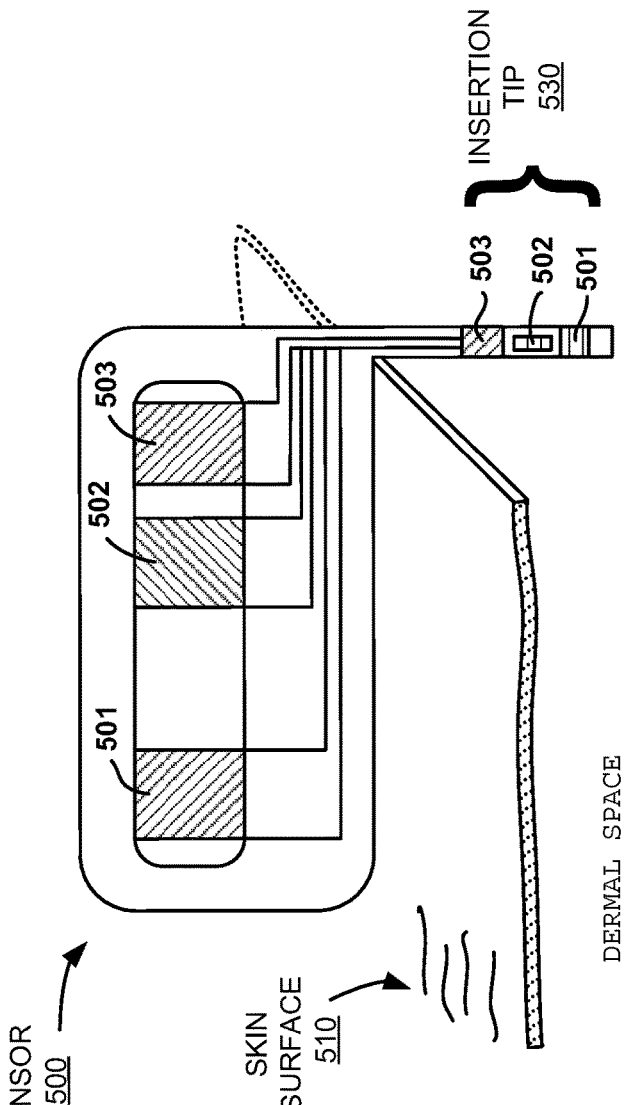

FIGURE 5A

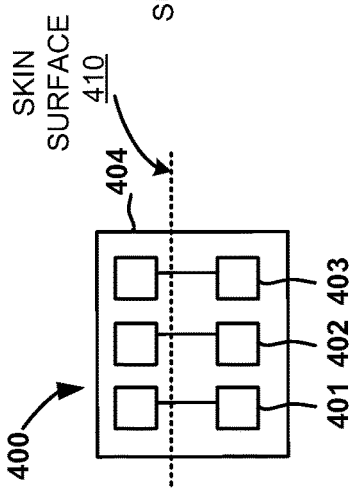

FIGURE 4

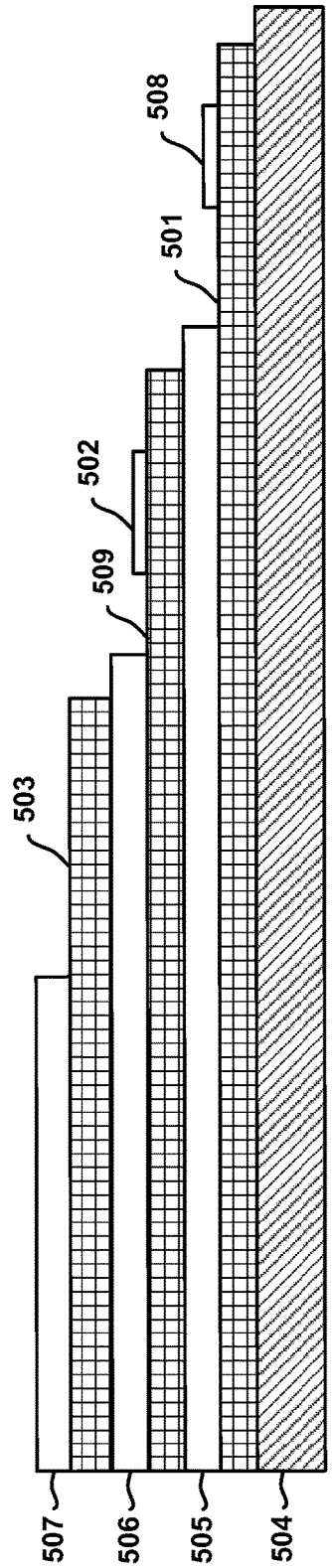

FIGURE 5B

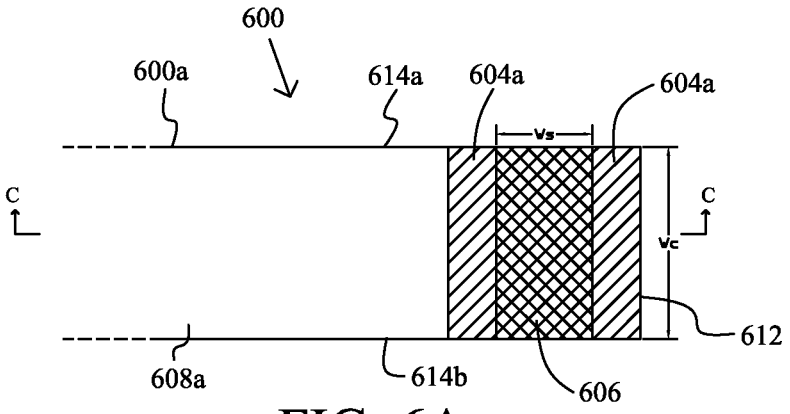

FIG. 6A

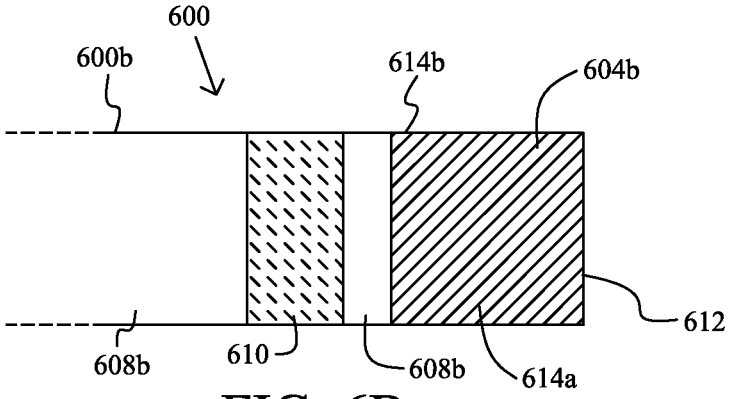

FIG. 6B

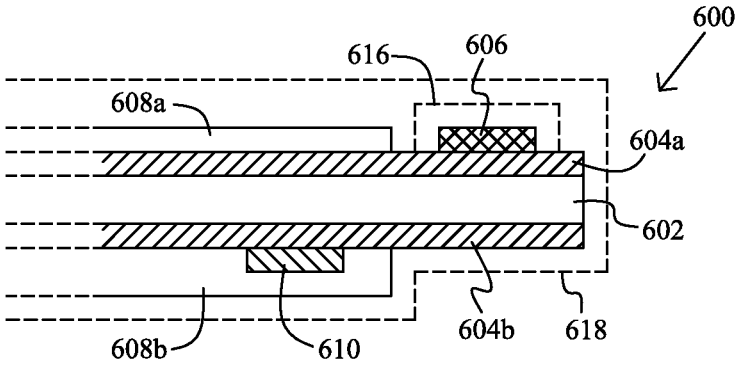

FIG. 6C

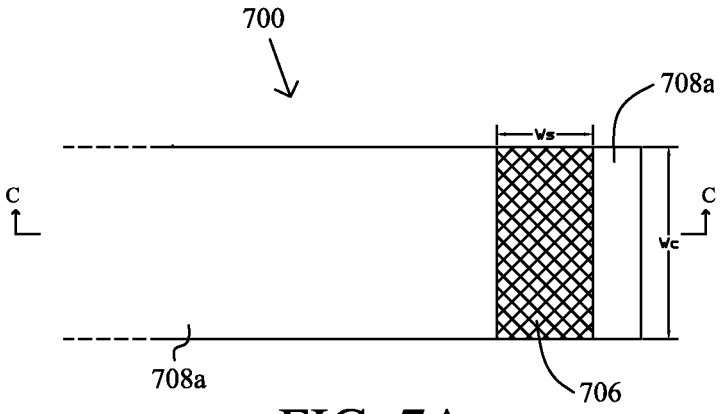

FIG. 7A

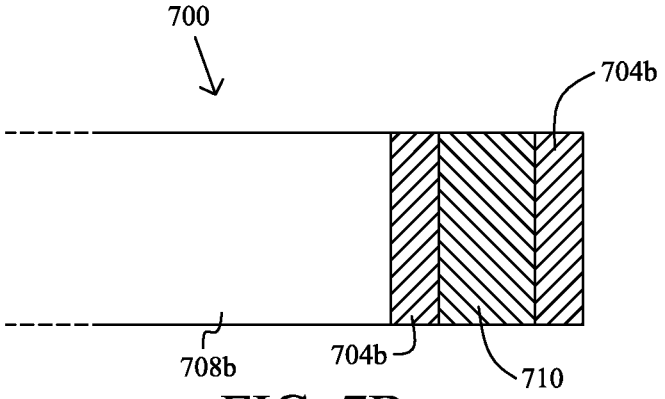

FIG. 7B

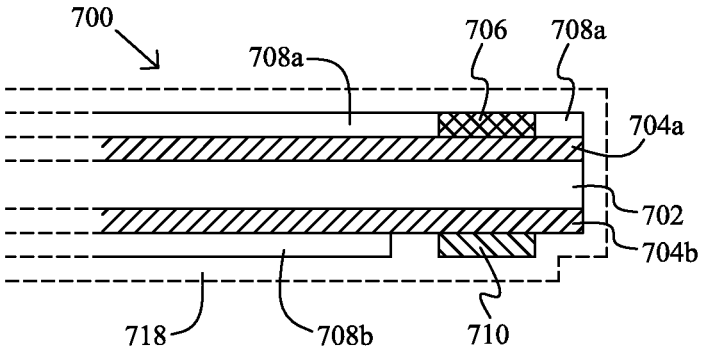

FIG. 7C

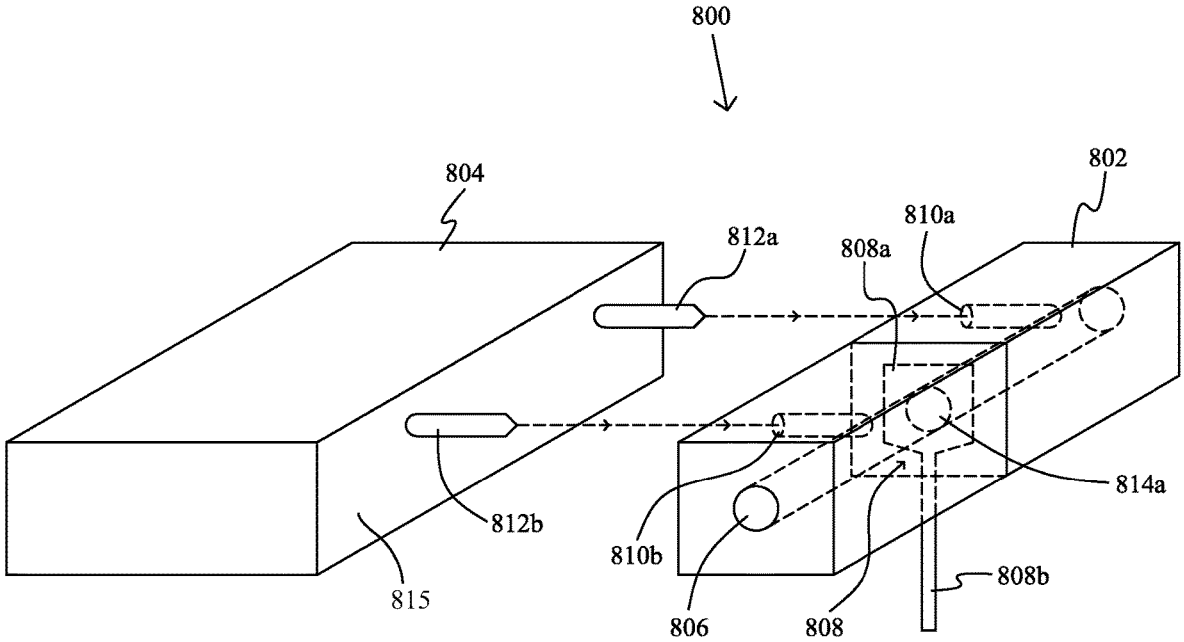
800
804
802
812a
810a
808a
812b
810b
814a
815
806
808
808b

FIG. 8A

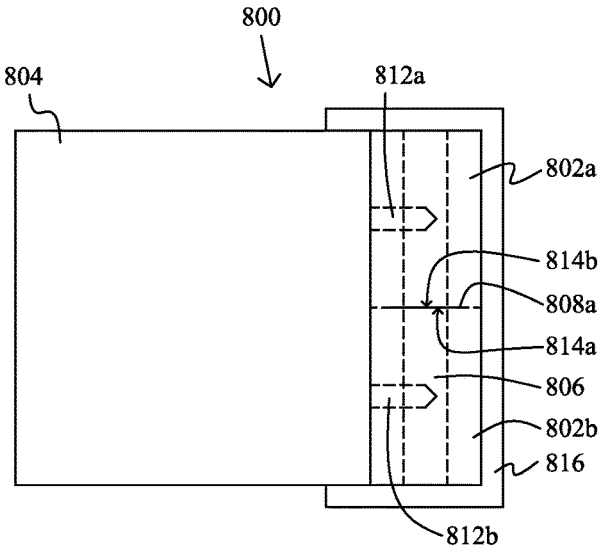
800
804
812a
802a
814b
808a
814a
806
802b
816
812b

FIG. 8B

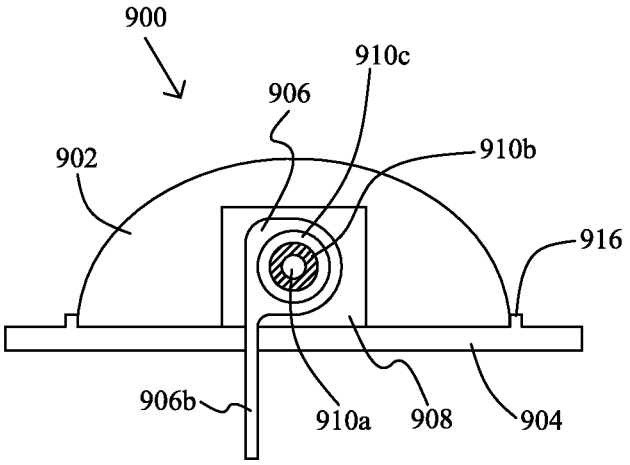
900
910c
906
910b
902
916
906b
910a
908
904

FIG. 9A

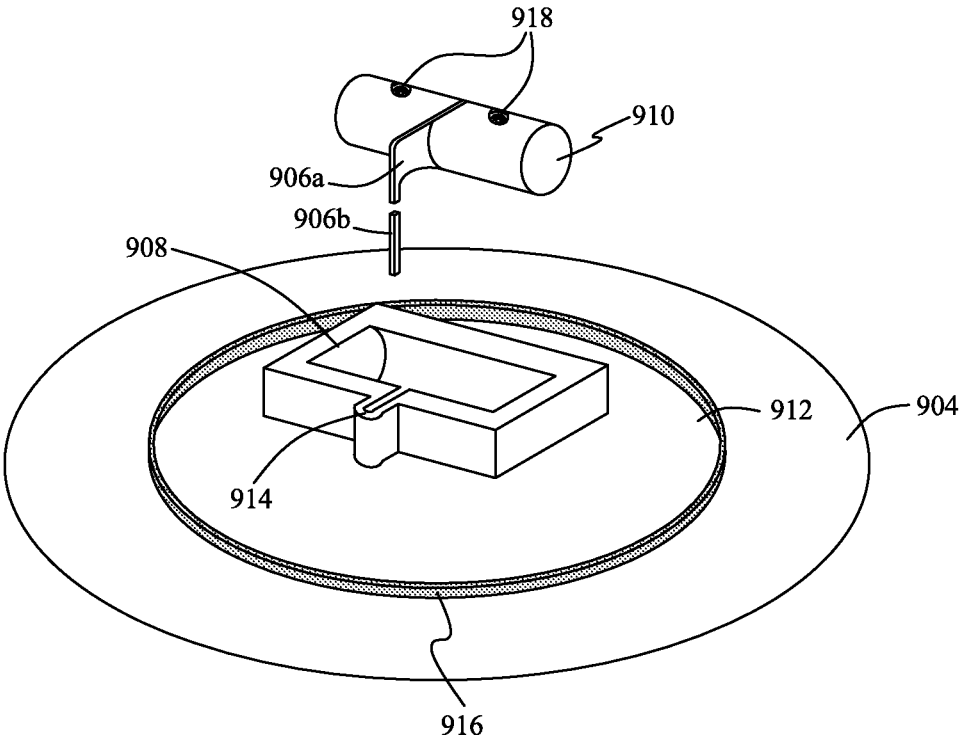
918
910
906a
906b
908
912
904
914
916

FIG. 9B

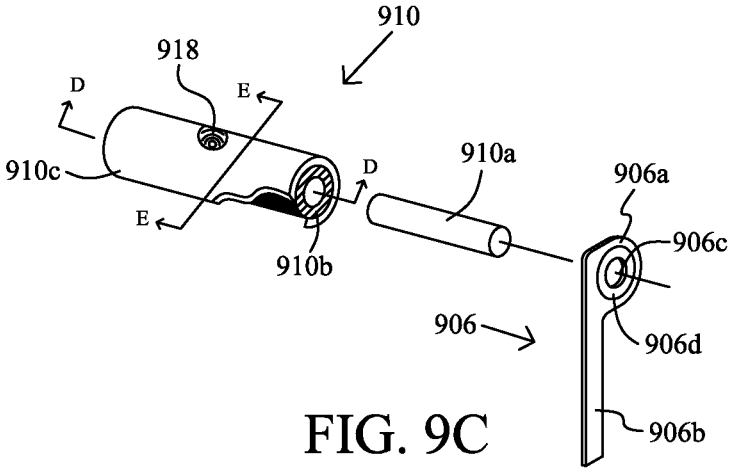

FIG. 9C

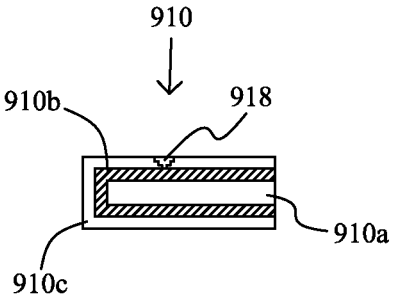

FIG. 9D

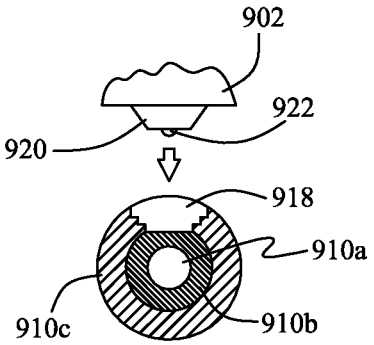

FIG. 9E

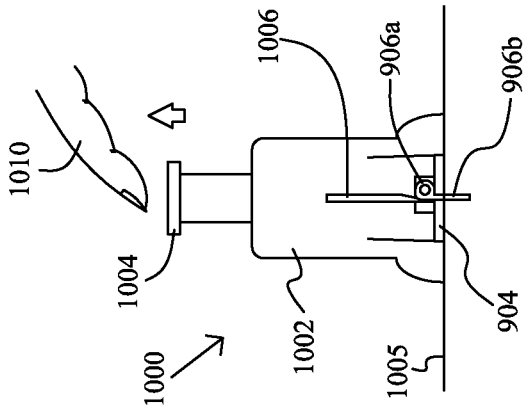

FIG. 10C

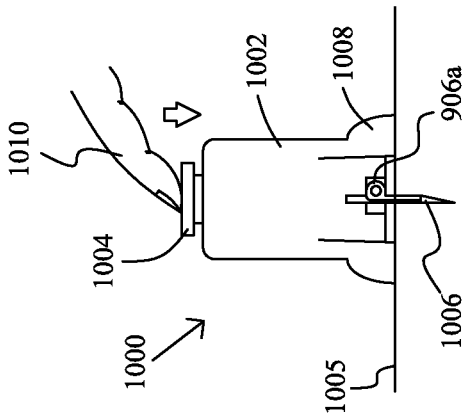

FIG. 10B

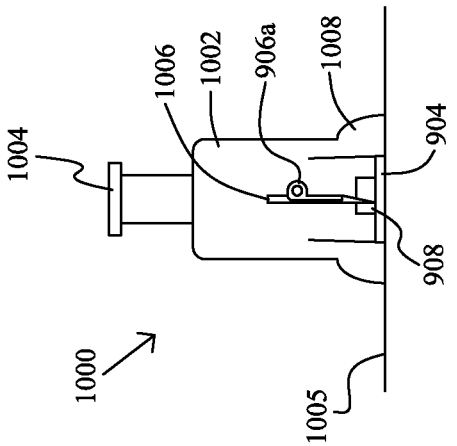

FIG. 10A

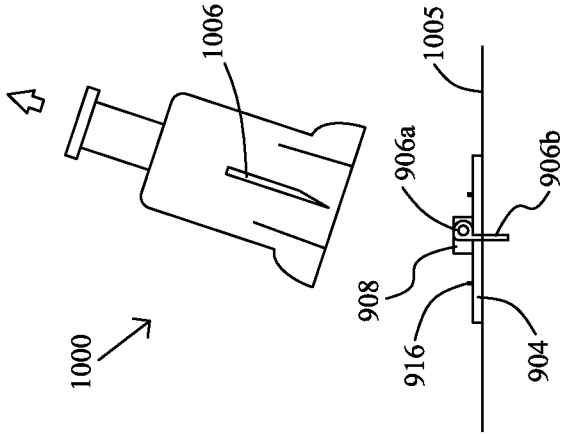

FIG. 10D

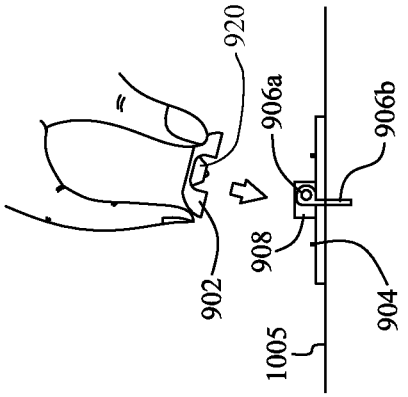

FIG. 10E

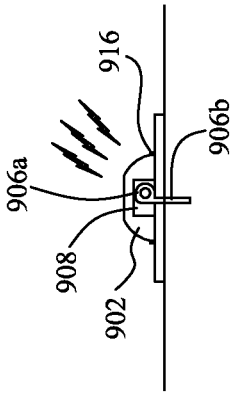

FIG. 10F

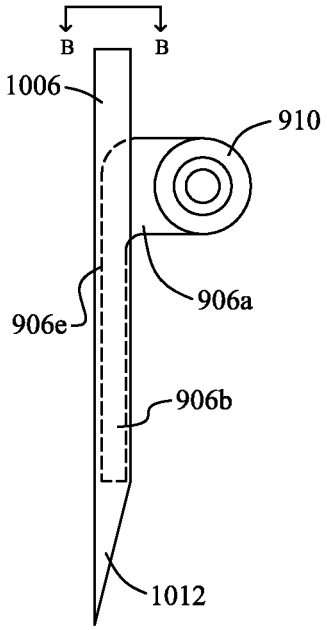

FIG. 11A

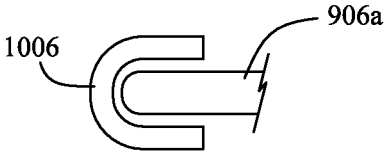

FIG. 11B

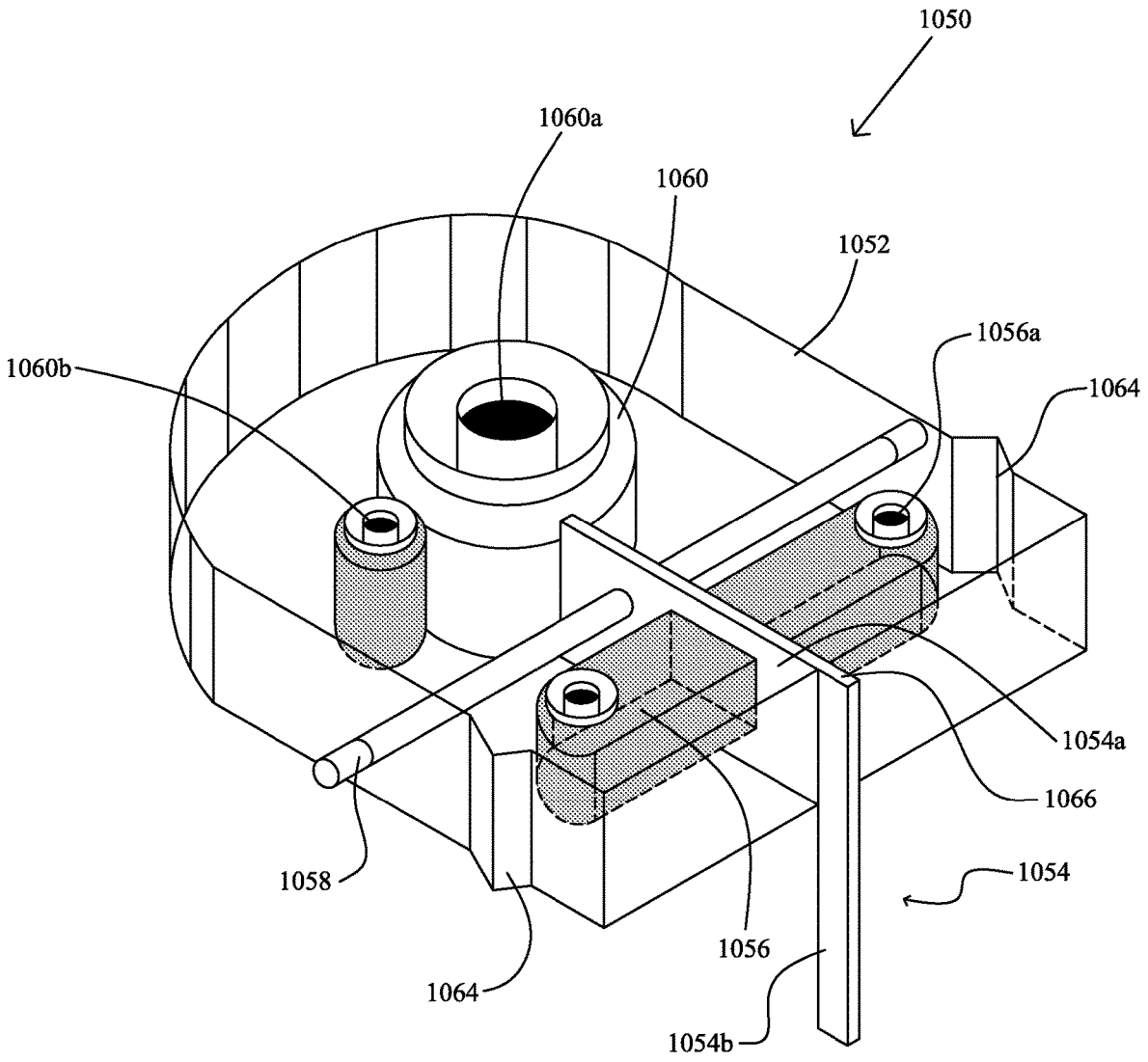
1050
1060a
1060
1052
1056a
1060b
1064
1054a
1066
1058
1054
1056
1064
1054b

FIG. 12A

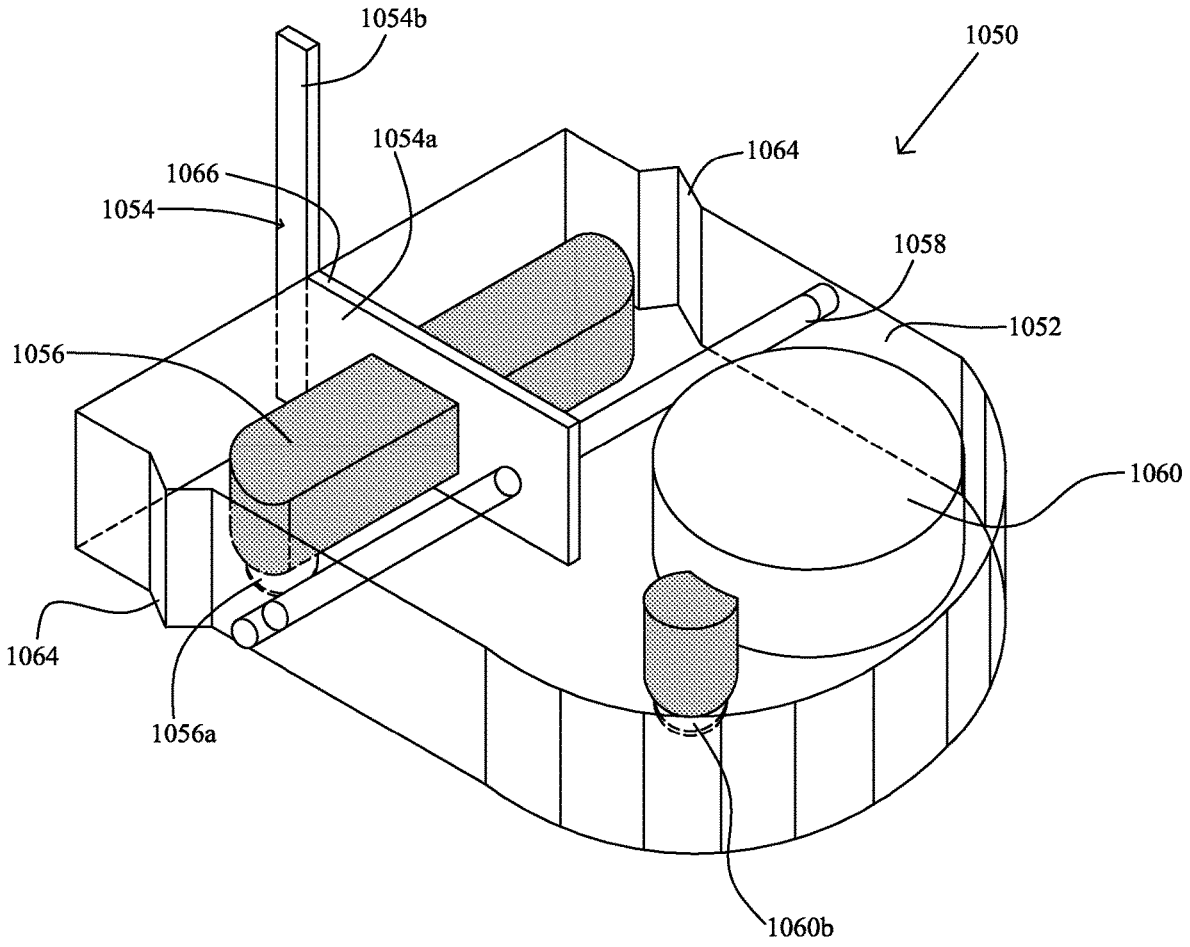
1054b
1050
1054a
1064
1066
1054
1058
1052
1056
1060
1064
1056a
1060b

FIG. 12B

CONTINUOUS ANALYTE MEASUREMENT SYSTEMS AND SYSTEMS AND METHODS FOR IMPLANTING THEM

RELATED APPLICATION

The present application is a continuation of U.S. patent application Ser. No. 12/842,013 filed Jul. 22, 2010, now U.S. Pat. No. 9,795,326, which claims priority under 35 U.S.C. § 119(e) to U.S. Provisional Application No. 61/227,967 filed Jul. 23, 2009, entitled "Continuous Analyte Measurement Systems and Systems and Methods for Implanting Them", the disclosures of each of which are incorporated herein by reference for all purposes.

BACKGROUND

There are a number of instances when it is desirable or necessary to monitor the concentration of an analyte, such as glucose, lactate, or oxygen, for example, in bodily fluid of a body. For example, it may be desirable to monitor high or low levels of glucose in blood or other bodily fluid that may be detrimental to a human. In a healthy human, the concentration of glucose in the blood is maintained between about 0.8 and about 1.2 mg/mL by a variety of hormones, such as insulin and glucagons, for example. If the blood glucose level is raised above its normal level, hyperglycemia develops and attendant symptoms may result. If the blood glucose concentration falls below its normal level, hypoglycemia develops and attendant symptoms, such as neurological and other symptoms, may result. Both hyperglycemia and hypoglycemia may result in death if untreated. Maintaining blood glucose at an appropriate concentration is thus a desirable or necessary part of treating a person who is physiologically unable to do so unaided, such as a person who is afflicted with diabetes mellitus.

Certain compounds may be administered to increase or decrease the concentration of blood glucose in a body. By way of example, insulin can be administered to a person in a variety of ways, such as through injection, for example, to decrease that person's blood glucose concentration. Further by way of example, glucose may be administered to a person in a variety of ways, such as directly, through injection or administration of an intravenous solution, for example, or indirectly, through ingestion of certain foods or drinks, for example, to increase that person's blood glucose level.

Regardless of the type of adjustment used, it is typically desirable or necessary to determine a person's blood glucose concentration before making an appropriate adjustment. Typically, blood glucose concentration is monitored by a person or sometimes by a physician using an in vitro test that requires a blood sample. The person may obtain the blood sample by withdrawing blood from a blood source in his or her body, such as a vein, using a needle and syringe, for example, or by lancing a portion of his or her skin, using a lancing device, for example, to make blood available external to the skin, to obtain the necessary sample volume for in vitro testing. The fresh blood sample is then applied to an in vitro testing device such as an analyte test strip, whereupon suitable detection methods, such as colorimetric, electrochemical, or photometric detection methods, for example, may be used to determine the person's actual blood glucose level. The foregoing procedure provides a blood glucose concentration for a particular or discrete point in time, and thus, must be repeated periodically, in order to monitor blood glucose over a longer period.

Conventionally, a "finger stick" is generally performed to extract an adequate volume of blood from a finger for in vitro glucose testing since the tissue of the fingertip is highly perfused with blood vessels. These tests monitor glucose at discrete periods of time when an individual affirmatively initiates a test at a given point in time, and therefore may be characterized as "discrete" tests. Unfortunately, the fingertip is also densely supplied with pain receptors, which can lead to significant discomfort during the blood extraction process. Unfortunately, the consistency with which the level of glucose is checked varies widely among individuals. Many diabetics find the periodic testing inconvenient and they sometimes forget to test their glucose level or do not have time for a proper test. Further, as the fingertip is densely supplied with pain receptors which causes significant discomfort during the blood extraction process, some individuals will not be inclined to test their glucose levels as frequently as they should. These situations may result in hyperglycemic or hypoglycemic episodes.

Glucose monitoring systems that allow for sample extraction from sites other than the finger and/or that can operate using small samples of blood, have been developed. (See, e.g., U.S. Pat. Nos. 6,120,676, 6,591,125 and 7,299,082, the disclosures of each of which are incorporated herein by reference for all purposes). Typically, about one μL or less of sample may be required for the proper operation of these devices, which enables glucose testing with a sample of blood obtained from the surface of a palm, a hand, an arm, a thigh, a leg, the torso, or the abdomen. Even though less painful than the finger stick approach, these other sample extraction methods are still inconvenient and may also be somewhat painful.

In addition to the discrete, in vitro, blood glucose monitoring systems described above, at least partially implantable, or in vivo, blood glucose monitoring systems, which are designed to provide continuous or semi-continuous in vivo measurement of an individual's glucose concentration, have been described. See, e.g., U.S. Pat. Nos. 6,175,752, 6,284,478, 6,134,461, 6,560,471, 6,746,582, 6,579,690, 6,932,892 and 7,299,082, the disclosures of each of which are incorporated herein by reference for all purposes.

A number of these in vivo systems are based on "enzyme electrode" technology, whereby an enzymatic reaction involving an enzyme such as glucose oxidase, glucose dehydrogenase, or the like, is combined with an electrochemical sensor for the determination of an individual's glucose level in a sample of the individual's biological fluid. By way of example, the electrochemical sensor may be placed in substantially continuous contact with a blood source, e.g., may be inserted into a blood source, such as a vein or other blood vessel, for example, such that the sensor is in continuous contact with blood and can effectively monitor blood glucose levels. Further by way of example, the electrochemical sensor may be placed in substantially continuous contact with bodily fluid other than blood, such as dermal or subcutaneous fluid, for example, for effective monitoring of glucose levels in such bodily fluid, such as interstitial fluid.

Relative to discrete or periodic monitoring using analyte test strips, continuous monitoring is generally more desirable in that it may provide a more comprehensive assessment of glucose levels and more useful information, including predictive trend information, for example. Subcutaneous continuous glucose monitoring is also desirable as it is typically less invasive than continuous glucose monitoring in blood accessed from a blood vessel.

Regardless of the type of implantable analyte monitoring device employed, it has been observed that transient, low sensor readings which result in clinically significant sensor related errors may occur for a period of time. For example, it has been found that during the initial 12-24 hours of sensor operation (after implantation), a glucose sensor's sensitivity (defined as the ratio between the analyte sensor current level and the blood glucose level) may be relatively low—a phenomenon sometimes referred to as "early signal attenuation" (ESA). Additionally, low sensor readings may be more likely to occur at certain predictable times such as during night time use—commonly referred to as "night time drop outs". An in vivo analyte sensor with lower than normal sensitivity may report blood glucose values lower than the actual values, thus potentially underestimating hyperglycemia, and triggering false hypoglycemia alarms.

While these transient, low readings are infrequent and, in many instances, resolve after a period of time, the negative deviations in sensor readings impose constraints upon analyte monitoring during the period in which the deviations are observed. One manner of addressing this problem is to configure the analyte monitoring system so as to delay reporting readings to the user until after this period of negative deviations passes. However, this leaves the user vulnerable and relying on alternate means of analyte measuring, e.g., in vitro testing, during this time. Another way of addressing negative deviations in sensor sensitivity is to require frequent calibration of the sensor during the time period in which the sensor is used. This is often accomplished in the context of continuous glucose monitoring devices by using a reference value after the sensor has been positioned in the body, where the reference value most often employed is obtained by a finger stick and use of a blood glucose test strip. However, these multiple calibrations are not desirable for at least the reasons that they are inconvenient and painful, as described above.

One cause of spurious low readings or drop outs by these implantable sensors is thought to be the presence of blood clots, also known as "thrombi", formed as a result of insertion of the sensor in vivo. Such clots exist in close proximity to a subcutaneous glucose sensor and have a tendency to "consume" glucose at a high rate, thereby lowering the local glucose concentration. It may also be that the implanted sensor constricts adjacent blood vessels thereby restricting glucose delivery to the sensor site.

One approach to addressing the problem of drop outs is to reduce the size of the sensor, thereby reducing the likelihood of thrombus formation upon implantation and impingement of the sensor structure on adjacent blood vessels, and thus, maximizing fluid flow to the sensor. One manner of reducing the size or surface area of at least the implantable portion of a sensor is to provide a sensor in which the sensor's electrodes and other sensing components and/or layers are distributed over both sides of the sensor, thereby necessitating a narrow sensor profile. Examples of such double-sided sensors are disclosed in U.S. Pat. No. 6,175,752, U.S. Patent Application Publication No. 2007/0203407, now U.S. Pat. No. 7,826,879, and U.S. Provisional Application No. 61/165,499 filed Mar. 31, 2009, the disclosures of each of which are incorporated herein by reference for all purposes.

It would also be desirable to provide sensors for use in a continuous analyte monitoring system that have negligible variations in sensitivity, including no variations or at least no statistically significant and/or clinically significant variations, from sensor to sensor. Such sensors would have to lend themselves to being highly reproducible and would necessarily involve the use of extremely accurate fabrication processes.

It would also be highly advantageous to provide continuous analyte monitoring systems that are substantially impervious to, or at least minimize, spurious low readings due to the in vivo environmental effects of subcutaneous implantation, such as ESA and night-time dropouts. Of particular interest are analyte monitoring devices and systems that are capable of substantially immediate and accurate analyte reporting to the user so that spurious low readings, or frequent calibrations, are minimized or are non existent.

It would also be highly advantageous if such sensors had a construct which makes them even less invasive than currently available sensors and which further minimizes pain and discomfort to the user.

SUMMARY

Embodiments of the present disclosure include continuous analyte monitoring systems utilizing implantable or partially implantable analyte sensors which have a relatively small profile (as compared to currently available implantable sensors). The relatively small size of the subject sensors reduce the likelihood of bleeding and, therefore, minimize thrombus formation upon implantation and the impingement of the sensor structure on adjacent blood vessels, and thus, maximizing fluid flow to the sensor and reducing the probability of ESA or low sensor readings.

In certain embodiments, the sensors are double-sided, meaning that both sides of the sensor's substrate are electrochemically functional, i.e., each side provides at least one electrode, thereby reducing the necessary surface area of the sensor. This enables the sensors to have a relatively smaller insertable distal or tail portion which reduces the in vivo environmental effects to which they are subjected. Further, the non-insertable proximal or external portion of the sensor may also have a relatively reduced size.

The subject continuous analyte monitoring systems include a skin-mounted portion or assembly and a remote portion or assembly. The skin-mounted portion includes at least the data transmitter, the transmitter battery, a portion of the sensor electronics, and electrical contacts for electrically coupling the implanted sensor with the transmitter. The remote portion of the system includes at least a data receiver and a user interface which may also be configured for test strip-based glucose monitoring. The skin-mounted portion of the system has a housing or base which is constructed to externally mount to the patient's skin and to mechanically and electrically couple the implanted sensor with the transmitter. Removably held or positioned within the housing/base structure is a connector piece having an electrical contact configuration which, when used with a double-sided sensor, enables coupling of the sensor to the transmitter in a low-profile, space-efficient manner. The skin-mounted components of the system, including the associated mounting/coupling structure, have complementary diminutive structures which, along with the very small sensor, which maximize patient usability and comfort.

Embodiments further include systems and devices for implanting the subject analyte sensors within a patient's skin and simultaneously coupling the analyte monitoring system's external, skin-mounted unit to the implanted sensor. Certain insertion systems include at least a manually-held and/or manually-operated inserter device and an insertion needle which is carried by and removably coupled to the inserter. In certain of these embodiments, only the insertion

needle is disposable with the inserter or insertion gun being reusable, reducing the overall cost of the system and providing environmental advantages. In other embodiments, the skin-mounted unit and sensor are inserted manually without the use of an insertion device.

Embodiments of the subject continuous analyte monitoring systems may include additional features and advantages. For example, certain embodiments do not require individual-specific calibration by the user, and, in certain of these embodiments, require no factory-based calibration as well. Certain other embodiments of the continuous analyte monitoring systems are capable of substantially immediate and accurate analyte reporting to the user so that spurious low readings, or frequent calibrations, are minimized or are non-existent.

The subject analyte sensors usable with the subject continuous analyte monitoring systems are highly reproducible with negligible or virtually non-existent sensor-to-sensor variations with respect to sensitivity to the analyte, eliminating the need for user-based calibration. Furthermore, in certain embodiments, the analyte sensors have a predictable sensitivity drift on the shelf and/or during in vivo use are provided. Computer programmable products including devices and/or systems that include programming for a given sensor drift profile may also be provided. The programming may use the drift profile to apply a correction factor to the system to eliminate the need for user-based calibration.

These and other features, objects and advantages of the present disclosure will become apparent to those persons skilled in the art upon reading the details of the present disclosure as more fully described below.

INCORPORATION BY REFERENCE

The following patents, applications and/or publications are incorporated herein by reference for all purposes: U.S. Pat. Nos. 4,545,382; 4,711,245; 5,262,035; 5,262,305; 5,264,104; 5,320,715; 5,356,786; 5,509,410; 5,543,326; 5,593,852; 5,601,435; 5,628,890; 5,820,551; 5,822,715; 5,899,855; 5,918,603; 6,071,391; 6,103,033; 6,120,676; 6,121,009; 6,134,461; 6,143,164; 6,144,837; 6,161,095; 6,175,752; 6,270,455; 6,284,478; 6,299,757; 6,338,790; 6,377,894; 6,461,496; 6,503,381; 6,514,460; 6,514,718; 6,540,891; 6,560,471; 6,579,690; 6,591,125; 6,592,745; 6,600,997; 6,605,200; 6,605,201; 6,616,819; 6,618,934; 6,650,471; 6,654,625; 6,676,816; 6,730,200; 6,736,957; 6,746,582; 6,749,740; 6,764,581; 6,773,671; 6,881,551; 6,893,545; 6,932,892; 6,932,894; 6,942,518; 7,041,468; 7,167,818; and 7,299,082; U.S. Published Application Nos. 2004/0186365, now U.S. Pat. No. 7,811,231; 2005/0182306, now U.S. Pat. No. 8,771,183; 2006/0025662, now U.S. Pat. No. 7,740,581; 2006/0091006; 2007/0056858, now U.S. Pat. No. 8,298,389; 2007/0068807, now U.S. Pat. No. 7,846,311; 2007/0095661; 2007/0108048, now U.S. Pat. No. 7,918,975; 2007/0199818, now U.S. Pat. No. 7,811,430; 2007/0227911, now U.S. Pat. No. 7,887,682; 2007/0233013; 2008/0066305, now U.S. Pat. No. 7,895,740; 2008/0081977, now U.S. Pat. No. 7,618,369; 2008/0102441, now U.S. Pat. No. 7,822,557; 2008/0148873, now U.S. Pat. No. 7,802,467; 2008/0161666; 2008/0267823; and 2009/0054748, now U.S. Pat. No. 7,885,698; U.S. patent application Ser. No. 11/461,725, now U.S. Pat. No. 7,866,026; Ser. No. 12/131,012; 12/242,823, now U.S. Pat. No. 8,219,173; Ser. No. 12/363,712, now U.S. Pat. No. 8,346,335; Ser. No. 12/495,709; 12/698,124; and Ser. No. 12/714,439; U.S. Provisional Application Ser. Nos. 61/184,234; 61/230,686; and 61/347,754.

BRIEF DESCRIPTION OF THE DRAWINGS

A detailed description of various aspects, features and embodiments of the present disclosure is provided herein with reference to the accompanying drawings, which are briefly described below. The drawings are illustrative and are not necessarily drawn to scale, with some components and features being exaggerated for clarity. The drawings illustrate various aspects and features of the present disclosure and may illustrate one or more embodiment(s) or example(s) of the present disclosure in whole or in part. A reference numeral, letter, and/or symbol that is used in one drawing to refer to a particular element or feature maybe used in another drawing to refer to a like element or feature. Included in the drawings are the following:

FIG. **1** shows a block diagram of an embodiment of a data monitoring and management system usable with the continuous analyte monitoring systems of the present disclosure;

FIG. **2** shows a block diagram of an embodiment of a transmitter unit of the data monitoring and management system of FIG. **1**;

FIG. **3** shows a block diagram of an embodiment of the receiver/monitor unit of the data monitoring and management system of FIG. **1**;

FIG. **4** shows a schematic diagram of an embodiment of an analyte sensor usable with the present disclosure;

FIGS. **5**A and **5**B show perspective and cross sectional views, respectively, of an embodiment of an analyte sensor usable with the present disclosure;

FIGS. **6**A, **6**B and **6**C show top, bottom and cross-sectional side views, respectively, of an embodiment of a two-sided analyte sensor usable with the present disclosure;

FIGS. **7**A, **7**B and **7**C show top, bottom and cross-sectional side views, respectively, of another embodiment of a two-sided analyte sensor usable with the present disclosure;

FIGS. **8**A and **8**B show perspective and top views, respectively, of one embodiment of a continuous analyte monitoring system of the present disclosure utilizing a double-sided analyte sensor;

FIGS. **9**A-**9**E show various views of another embodiment of a continuous analyte monitoring system of the present disclosure utilizing a different double-sided analyte sensor; specifically, FIG. **9**A is a cross-sectional view of the system's control unit, including the transmitter, on-skin mounting structure, and an electrical/mechanical connector with an analyte sensor operatively attached thereto;

FIG. **9**B is an exploded view of the connector and analyte sensor; FIG. **9**C is an exploded, partial cutaway view of the mechanical/electrical connector and the analyte sensor; FIG. **9**D is a lengthwise cross-sectional view of the cutaway portion of the connector taken along lines D-D of FIG. **9**C; FIG. **9**E is a cross-sectional view of the coupling core, taken along lines E-E of FIG. **9**C, and associated pins of the system's transmitter;

FIGS. **10**A-**10**F are schematic representations illustrating use of an insertion system of the present disclosure to insert the continuous analyte monitoring system of FIGS. **9**A-**9**E on/in the skin of a patient;

FIGS. **11**A and **11**B show side and top views, respectively, of an insertion needle of the insertion system of FIGS.

10A-10F having the double-sided analyte sensor of FIGS. 9A-9E operatively nested therein; and

FIGS. 12A and 12B are top and bottom perspective views of another continuous analyte monitoring system of the present disclosure.

DETAILED DESCRIPTION

Before the embodiments of the present disclosure are described, it is to be understood that the present disclosure is not limited to particular embodiments described, as such may, of course, vary. It is also to be understood that the terminology used herein is for the purpose of describing particular embodiments only, and is not intended to be limiting, since the scope of the present disclosure will be limited only by the appended claims.

Where a range of values is provided, it is understood that each intervening value, to the tenth of the unit of the lower limit unless the context clearly dictates otherwise, between the upper and lower limit of that range and any other stated or intervening value in that stated range, is encompassed within embodiments of the present disclosure. The upper and lower limits of these smaller ranges may independently be included in the smaller ranges as also encompassed within embodiments of the present disclosure, subject to any specifically excluded limit in the stated range. Where the stated range includes one or both of the limits, ranges excluding either or both of those included limits are also included in the present disclosure.

Generally, embodiments of the present disclosure relate to methods and devices for detecting at least one analyte, such as glucose, in body fluid. Embodiments relate to the continuous and/or automatic in vivo monitoring of the level of one or more analytes using a continuous analyte monitoring system that includes an analyte sensor for the in vivo detection, of an analyte, such as glucose, lactate, and the like, in a body fluid. Embodiments include wholly implantable analyte sensors and analyte sensors in which only a portion of the sensor is positioned under the skin and a portion of the sensor resides above the skin, e.g., for contact to a control unit, transmitter, receiver, transceiver, processor, etc. At least a portion of a sensor may be, for example, subcutaneously positionable in a patient for the continuous or semi-continuous monitoring of a level of an analyte in a patient's interstitial fluid. For the purposes of this description, semi-continuous monitoring and continuous monitoring will be used interchangeably, unless noted otherwise. The sensor response may be correlated and/or converted to analyte levels in blood or other fluids. In certain embodiments, an analyte sensor may be positioned in contact with interstitial fluid to detect the level of glucose, which detected glucose may be used to infer the glucose level in the patient's bloodstream. Analyte sensors may be insertable into a vein, artery, or other portion of the body containing fluid. Embodiments of the analyte sensors of the subject disclosure may be configured for monitoring the level of the analyte over a time period which may range from minutes, hours, days, weeks, or longer.

FIG. **1** shows a data monitoring and management system such as, for example, an analyte (e.g., glucose) monitoring system **100** in accordance with certain embodiments. Embodiments of the subject disclosure are further described primarily with respect to glucose monitoring devices and systems, and methods of glucose detection, for convenience only and such description is in no way intended to limit the scope of the present disclosure. It is to be understood that the analyte monitoring system may be configured to monitor a variety of analytes instead of or in addition to glucose, e.g., at the same time or at different times.

Analytes that may be monitored include, but are not limited to, acetyl choline, amylase, bilirubin, cholesterol, chorionic gonadotropin, creatine kinase (e.g., CK-MB), creatine, creatinine, DNA, fructosamine, glucose, glutamine, growth hormones, hormones, ketone bodies, lactate, oxygen, peroxide, prostate-specific antigen, prothrombin, RNA, thyroid stimulating hormone, and troponin. The concentration of drugs, such as, for example, antibiotics (e.g., gentamicin, vancomycin, and the like), digitoxin, digoxin, drugs of abuse, theophylline, and warfarin, may also be monitored. In those embodiments that monitor more than one analyte, the analytes may be monitored at the same or different times.

The analyte monitoring system **100** includes a sensor **101**, a data processing unit **102** connectable to the sensor **101**, and a primary receiver unit **104** which is configured to communicate with the data processing unit **102** via a communication link **103**. In certain embodiments, the primary receiver unit **104** may be further configured to transmit data to a data processing terminal **105** to evaluate or otherwise process or format data received by the primary receiver unit **104**. The data processing terminal **105** may be configured to receive data directly from the data processing unit **102** via a communication link which may optionally be configured for bi-directional communication. Further, the data processing unit **102** may include a transmitter or a transceiver to transmit and/or receive data to and/or from the primary receiver unit **104** and/or the data processing terminal **105** and/or optionally the secondary receiver unit **106**.

Also shown in FIG. **1** is an optional secondary receiver unit **106** which is operatively coupled to the communication link **103** and configured to receive data transmitted from the data processing unit **102**. The secondary receiver unit **106** may be configured to communicate with the primary receiver unit **104**, as well as the data processing terminal **105**. The secondary receiver unit **106** may be configured for bi-directional wireless communication with each of the primary receiver unit **104** and the data processing terminal **105**. As discussed in further detail below, in certain embodiments the secondary receiver unit **106** may be a de-featured receiver as compared to the primary receiver, i.e., the secondary receiver may include a limited or minimal number of functions and features as compared with the primary receiver unit **104**. As such, the secondary receiver unit **106** may include a smaller (in one or more, including all, dimensions), compact housing or embodied in a device such as a wrist watch, arm band, etc., for example. Alternatively, the secondary receiver unit **106** may be configured with the same or substantially similar functions and features as the primary receiver unit **104**. The secondary receiver unit **106** may include a docking portion to be mated with a docking cradle unit for placement by, e.g., the bedside for nighttime monitoring, and/or a bi-directional communication device. A docking cradle may recharge a powers supply.

Only one sensor **101**, data processing unit **102** and data processing terminal **105** are shown in the embodiment of the analyte monitoring system **100** illustrated in FIG. **1**. However, it will be appreciated by one of ordinary skill in the art that the analyte monitoring system **100** may include more than one sensor **101** and/or more than one data processing unit **102**, and/or more than one data processing terminal **105**. Multiple sensors may be positioned in a patient for analyte monitoring at the same or different times. In certain embodiments, analyte information obtained by a first positioned sensor may be employed as a comparison to analyte information obtained by a second sensor. This may be useful to

confirm or validate analyte information obtained from one or both of the sensors. Such redundancy may be useful if analyte information is contemplated in critical therapy-related decisions.

The analyte monitoring system **100** may be a continuous monitoring system or semi-continuous. In a multi-component environment, each component may be configured to be uniquely identified by one or more of the other components in the system so that communication conflict may be readily resolved between the various components within the analyte monitoring system **100**. For example, unique IDs, communication channels, and the like, may be used.

In certain embodiments, the sensor **101** is physically positioned in and/or on the body of a user whose analyte level is being monitored. The sensor **101** may be configured to continuously or semi-continuously sample the analyte level of the user automatically (without the user initiating the sampling), based on a programmed intervals such as, for example, but not limited to, once every minute, once every five minutes and so on, and convert the sampled analyte level into a corresponding signal for transmission by the data processing unit **102**. The data processing unit **102** is couple-able to the sensor **101** so that both devices are positioned in or on the user's body, with at least a portion of the analyte sensor **101** positioned transcutaneously. The data processing unit **102** may include a fixation element such as adhesive or the like to secure it to the user's body. A mount (not shown) attachable to the user and mateable with the unit **102** may be used. For example, a mount may include an adhesive surface. The data processing unit **102** performs data processing functions, where such functions may include, but are not limited to, filtering and encoding of data signals, each of which corresponds to a sampled analyte level of the user, for transmission to the primary receiver unit **104** via the communication link **103**. In one embodiment, the sensor **101** or the data processing unit **102** or a combined sensor/data processing unit may be wholly implantable under the skin layer of the user.

In certain embodiments, the primary receiver unit **104** may include a signal interface section including an radio frequency (RF) receiver and an antenna that is configured to communicate with the data processing unit **102** via the communication link **103**, and a data processing section for processing the received data from the data processing unit **102** such as data decoding, error detection and correction, data clock generation, data bit recovery, etc., or any combination thereof.

In operation, the primary receiver unit **104** in certain embodiments is configured to synchronize with the data processing unit **102** to uniquely identify the data processing unit **102**, based on, for example, an identification information of the data processing unit **102**, and thereafter, to continuously or semi-continuously receive signals transmitted from the data processing unit **102** associated with the monitored analyte levels detected by the sensor **101**. Referring again to FIG. **1**, the data processing terminal **105** may include a personal computer, a portable computer such as a laptop or a handheld device (e.g., personal digital assistants (PDAs), telephone such as a cellular phone (e.g., a multimedia and Internet-enabled mobile phone such as an iPhone or similar phone), mp3 player, pager, and the like), drug delivery device, each of which may be configured for data communication with the receiver via a wired or a wireless connection. Additionally, the data processing terminal **105** may further be connected to a data network (not shown) for storing, retrieving, updating, and/or analyzing data corresponding to the detected analyte level of the user.

The data processing terminal **105** may include an infusion device such as an insulin infusion pump or the like, which may be configured to administer insulin to patients, and which may be configured to communicate with the primary receiver unit **104** for receiving, among others, the measured analyte level. Alternatively, the primary receiver unit **104** may be configured to integrate an infusion device therein so that the primary receiver unit **104** is configured to administer insulin (or other appropriate drug) therapy to patients, for example, for administering and modifying basal profiles, as well as for determining appropriate boluses for administration based on, among others, the detected analyte levels received from the data processing unit **102**. An infusion device may be an external device or an internal device (wholly implantable in a user).

In certain embodiments, the data processing terminal **105**, which may include an insulin pump, may be configured to receive the analyte signals from the data processing unit **102**, and thus, incorporate the functions of the primary receiver unit **104** including data processing for managing the patient's insulin therapy and analyte monitoring. In certain embodiments, the communication link **103** as well as one or more of the other communication interfaces shown in FIG. **1**, may use one or more of: an RF communication protocol, an infrared communication protocol, a Bluetooth® enabled communication protocol, an 802.11x wireless communication protocol, or an equivalent wireless communication protocol which would allow secure, wireless communication of several units (for example, per HIPAA requirements), while avoiding potential data collision and interference.

FIG. **2** shows a block diagram of an embodiment of a data processing unit of the data monitoring and detection system shown in FIG. **1**. User input and/or interface components may be included or a data processing unit may be free of user input and/or interface components. Referring to the Figure, the transmitter unit **102** in one embodiment includes an analog interface **201** configured to communicate with the sensor **101** (FIG. **1**), a user input **202**, and a temperature detection section **203**, each of which is operatively coupled to a transmitter processor **204** such as a central processing unit (CPU). In certain embodiments, one or more application-specific integrated circuits (ASIC) may be used to implement one or more functions or routines associated with the operations of the data processing unit (and/or receiver unit) using for example one or more state machines and buffers.

As can be seen in the embodiment of FIG. **2**, the sensor **101** (FIG. **1**) includes four contacts, three of which are electrodes—work electrode (W) **210**, reference electrode (R) **212**, and counter electrode (C) **213**, each operatively coupled to the analog interface **201** of the data processing unit **102**. This embodiment also shows optional guard contact (G) **211**. Fewer or greater electrodes may be employed. For example, the counter and reference electrode functions may be served by a single counter/reference electrode, there may be more than one working electrode and/or reference electrode and/or counter electrode, etc. Also shown is a leak detection circuit **214** coupled to the guard contact (G) **211** and the processor **204** in the transmitter unit **102** of the analyte monitoring system **100**. The leak detection circuit **214** in accordance with one embodiment of the present disclosure may be configured to detect leakage current in the sensor **101** to determine whether the measured sensor data is corrupt or whether the measured data from the sensor **101** is accurate. Further shown in FIG. **2** are a transmitter serial communication section **205** and an RF transmitter **206**, each of which is also operatively coupled to the transmitter

processor **204**. Moreover, a power supply **207** such as a battery is also provided in the transmitter unit **102** to provide the necessary power for the transmitter unit **102**. Additionally, as can be seen from the Figure, clock **208** is provided to, among others, supply real time information to the transmitter processor **204**. In one embodiment, a unidirectional input path is established from the sensor **101** (FIG. **1**) and/or manufacturing and testing equipment to the analog interface **201** of the transmitter unit **102**, while a unidirectional output is established from the output of the RF transmitter **206** of the transmitter unit **102** for transmission to the primary receiver unit **104**. In this manner, a data path is shown in FIG. **2** between the aforementioned unidirectional input and output via a dedicated link **209** from the analog interface **201** to serial communication section **205**, thereafter to the processor **204**, and then to the RF transmitter **206**.

FIG. **3** is a block diagram of an embodiment of a receiver/monitor unit such as the primary receiver unit **104** of the data monitoring and management system shown in FIG. **1**. The primary receiver unit **104** may include one or more of: a blood glucose test strip interface **301** for in vitro testing, an RF receiver **302**, an input **303**, a temperature monitor section **304**, and a clock **305**, each of which is operatively coupled to a processing and storage section **307**. The primary receiver unit **104** also includes a power supply **306** operatively coupled to a power conversion and monitoring section **308**. Further, the power conversion and monitoring section **308** is also coupled to the receiver processor **307**. Moreover, also shown are a receiver serial communication section **309**, and an output **310**, each operatively coupled to the processing and storage unit **307**. The receiver may include user input and/or interface components or may be free of user input and/or interface components.

In certain embodiments having a test strip interface **301**, the interface includes a glucose level testing portion to receive a blood (or other body fluid sample) glucose test or information related thereto. For example, the interface may include a test strip port to receive a glucose test strip. The device may determine the glucose level of the test strip, and optionally display (or otherwise notice) the glucose level on the output **310** of the primary receiver unit **104**. Any suitable test strip may be employed, e.g., test strips that only require a very small amount (e.g., one microliter or less, e.g., 0.5 microliter or less, e.g., 0.1 microliter or less), of applied sample to the strip in order to obtain accurate glucose information, e.g. Freestyle® and Precision® blood glucose test strips from Abbott Diabetes Care Inc. Glucose information obtained by the in vitro glucose testing device may be used for a variety of purposes, computations, etc. For example, the information may be used to calibrate sensor **101** (however, calibration of the subject sensors may not be necessary), confirm results of the sensor **101** to increase the confidence thereof (e.g., in instances in which information obtained by sensor **101** is employed in therapy related decisions), etc. Exemplary blood glucose monitoring systems are described, e.g., in U.S. Pat. Nos. 6,071,391, 6,120,676, 6,338,790 and 6,616,819, and in U.S. application Ser. No. 11/282,001, now U.S. Pat. No. 7,918,975 and Ser. No. 11/225,659, now U.S. Pat. No. 8,298,389, the disclosures of each of which are incorporated herein by reference for all purposes.

In further embodiments, the data processing unit **102** and/or the primary receiver unit **104** and/or the secondary receiver unit **106**, and/or the data processing terminal/infusion section **105** may be configured to receive the blood glucose value from a wired connection or wirelessly over a communication link from, for example, a blood glucose meter. In further embodiments, a user manipulating or using the analyte monitoring system **100** (FIG. **1**) may manually input the blood glucose value using, for example, a user interface (for example, a keyboard, keypad, voice commands, and the like) incorporated in the one or more of the data processing unit **102**, the primary receiver unit **104**, secondary receiver unit **106**, or the data processing terminal/infusion section **105**.

Additional detailed descriptions are provided in U.S. Pat. Nos. 5,262,035, 5,262,305, 5,264,104, 5,320,715, 5,593,852, 6,103,033, 6,134,461, 6,175,752, 6,560,471, 6,579,690, 6,605,200, 6,654,625, 6,746,582 and 6,932,894, and in U.S. Published Patent Application Nos. 2004/0186365, now U.S. Pat. No. 7,811,231 and 2005/0182306, now U.S. Pat. No. 8,771,183, the disclosures of each of which are incorporated herein by reference for all purposes.

FIG. **4** schematically shows an embodiment of an analyte sensor usable in the continuous analyte monitoring systems just described. This sensor embodiment includes electrodes **401**, **402** and **403** on a base **404**. Electrodes (and/or other features) may be applied or otherwise processed using any suitable technology, e.g., chemical vapor deposition (CVD), physical vapor deposition, sputtering, reactive sputtering, printing, coating, ablating (e.g., laser ablation), painting, dip coating, etching and the like. Suitable conductive materials include but are not limited to aluminum, carbon (such as graphite), cobalt, copper, gallium, gold, indium, iridium, iron, lead, magnesium, mercury (as an amalgam), nickel, niobium, osmium, palladium, platinum, rhenium, rhodium, selenium, silicon (e.g., doped polycrystalline silicon), silver, tantalum, tin, titanium, tungsten, uranium, vanadium, zinc, zirconium, mixtures thereof, and alloys, oxides, or metallic compounds of these elements.

The sensor may be wholly implantable in a user or may be configured so that only a portion is positioned within (internal) a user and another portion outside (external) a user. For example, the sensor **400** may include a portion positionable above a surface of the skin **410**, and a portion positioned below the skin. In such embodiments, the external portion may include contacts (connected to respective electrodes of the second portion by traces) to connect to another device also external to the user such as a transmitter unit. While the embodiment of FIG. **4** shows three electrodes side-by-side on the same surface of base **404**, other configurations are contemplated, e.g., fewer or greater electrodes, some or all electrodes on different surfaces of the base or present on another base, some or all electrodes stacked together, some or all electrodes twisted together (e.g., an electrode twisted around or about another or electrodes twisted together), electrodes of differing materials and dimensions, etc.

FIG. **5**A shows a perspective view of an embodiment of an electrochemical analyte sensor **500** of the present disclosure having a first portion (which in this embodiment may be characterized as a major or body portion) positionable above a surface of the skin **510**, and a second portion (which in this embodiment may be characterized as a minor or tail portion) that includes an insertion tip **530** positionable below the skin, e.g., penetrating through the skin and into, e.g., the dermal space **520**, in contact with the user's biofluid such as interstitial fluid. Contact portions of a working electrode **501**, a reference electrode **502**, and a counter electrode **503** are positioned on the portion of the sensor **500** situated above the skin surface **510**. Working electrode **501**, a reference electrode **502**, and a counter electrode **503** are shown at the second section and particularly at the insertion tip **530**. Traces may be provided from the electrode at the tip

to the contact, as shown in FIG. **5**A. It is to be understood that greater or fewer electrodes may be provided on a sensor. For example, a sensor may include more than one working electrode and/or the counter and reference electrodes may be a single counter/reference electrode, etc.

FIG. **5**B shows a cross sectional view of a portion of the sensor **500** of FIG. **5**A. The electrodes **501**, **502** and **503** of the sensor **500** as well as the substrate and the dielectric layers are provided in a layered configuration or construction. For example, as shown in FIG. **5**B, in one aspect, the sensor **500** (such as the sensor **101** FIG. **1**), includes a substrate layer **504**, and a first conducting layer **501** such as carbon, gold, etc., disposed on at least a portion of the substrate layer **504**, and which may provide the working electrode. Also shown disposed on at least a portion of the first conducting layer **501** is a sensing component or layer **508**, discussed in greater detail below. The area of the conducting layer covered by the sensing layer is herein referred to as the active area. A first insulation layer such as a first dielectric layer **505** is disposed or layered on at least a portion of the first conducting layer **501**, and further, a second conducting layer **502** may be disposed or stacked on top of at least a portion of the first insulation layer (or dielectric layer) **505**, and which may provide the reference electrode. In one aspect, conducting layer **502** may include a layer of silver/silver chloride (Ag/AgCl), gold, etc. A second insulation layer **506** such as a dielectric layer in one embodiment may be disposed or layered on at least a portion of the second conducting layer **509**. Further, a third conducting layer **503** may provide the counter electrode **503**. It may be disposed on at least a portion of the second insulation layer **506**. Finally, a third insulation layer **507** may be disposed or layered on at least a portion of the third conducting layer **503**. In this manner, the sensor **500** may be layered such that at least a portion of each of the conducting layers is separated by a respective insulation layer (for example, a dielectric layer). The embodiment of FIGS. **5**A and **5**B show the layers having different lengths. Some or all of the layers may have the same or different lengths and/or widths.

In addition to the electrodes, sensing layer and dielectric layers, sensor **500** may also include a temperature probe, a mass transport limiting layer, a biocompatible layer, and/or other optional components (none of which are illustrated). Each of these components enhances the functioning of and/or results from the sensor.

Substrate **504** may be formed using a variety of non-conducting materials, including, for example, polymeric or plastic materials and ceramic materials. (It is to be understood that substrate includes any dielectric material of a sensor, e.g., around and/or in between electrodes of a sensor such as a sensor in the form of a wire wherein the electrodes of the sensor are wires that are spaced-apart by a substrate). In some embodiments, the substrate is flexible. For example, if the sensor is configured for implantation into a patient, then the sensor may be made flexible (although rigid sensors may also be used for implantable sensors) to reduce pain to the patient and damage to the tissue caused by the implantation of and/or the wearing of the sensor. A flexible substrate often increases the patient's comfort and allows a wider range of activities. Suitable materials for a flexible substrate include, for example, non-conducting plastic or polymeric materials and other non-conducting, flexible, deformable materials. Examples of useful plastic or polymeric materials include thermoplastics such as polycarbonates, polyesters (e.g., Mylar and polyethylene terephthalate (PET)), polyvinyl chloride (PVC), polyurethanes, polyethers, polyamides, polyimides, or copolymers of these thermoplastics, such as PETG (glycol-modified polyethylene terephthalate).

In other embodiments, the sensors, or at least a portion of the sensors, are made using a relatively rigid substrate, for example, to provide structural support against bending or breaking. Examples of rigid materials that may be used as the substrate include poorly conducting ceramics, such as aluminum oxide and silicon dioxide. One advantage of an implantable sensor having a rigid substrate is that the sensor **500** may have a sharp point and/or a sharp edge to aid in implantation of a sensor without an additional insertion device. It will be appreciated that for many sensors and sensor applications, both rigid and flexible sensors will operate adequately. The flexibility of the sensor may also be controlled and varied along a continuum by changing, for example, the composition and/or thickness and/or width of the substrate (and/or the composition and/or thickness and/or width of one or more electrodes or other material of a sensor).

In addition to considerations regarding flexibility, it is often desirable that implantable sensors should have a substrate which is non-toxic. For example, the substrate may be approved by one or more appropriate governmental agencies or private groups for in vivo use.

Although the sensor substrate, in at least some embodiments, has uniform dimensions along the entire length of the sensor, in other embodiments, the substrate has a distal end or tail portion and a proximal end or body portion with different widths, respectively, as illustrated in FIG. **5**A. In these embodiments, the distal end **530** of the sensor may have a relatively narrow width. For in vivo sensors which are implantable into the subcutaneous tissue or another portion of a patient's body, the narrow width of the distal end of the substrate may facilitate the implantation of the sensor. Often, the narrower the width of the sensor, the less pain the patient will feel during implantation of the sensor and afterwards.

For subcutaneously implantable sensors which are designed for continuous or semi-continuous monitoring of the analyte during normal activities of the patient, a tail portion or distal end of the sensor which is to be implanted into the patient may have a width of about 2 mm or less, e.g., about 1 mm or less, e.g., about 0.5 mm or less, e.g., about 0.25 mm or less, e.g., about 0.15 mm or less. However, wider or narrower sensors may be used. The proximal end of the sensor may have a width larger than the distal end to facilitate the connection between the electrode contacts and contacts on a control unit, or the width may be substantially the same as the distal portion.

The thickness of the substrate may be determined by the mechanical properties of the substrate material (e.g., the strength, modulus, and/or flexibility of the material), the desired use of the sensor including stresses on the substrate arising from that use, as well as the depth of any channels or indentations that may be formed in the substrate, as discussed below. The substrate of a subcutaneously implantable sensor for continuous or semi-continuous monitoring of the level of an analyte while the patient engages in normal activities may have a thickness that ranges from about 50 μm to about 500 μm, e.g., from about 100 μm to about 300 μm. However, thicker and thinner substrates may be used.

The length of the sensor may have a wide range of values depending on a variety of factors. Factors which influence the length of an implantable sensor may include the depth of implantation into the patient and the ability of the patient to manipulate a small flexible sensor and make connections

between the sensor and the sensor control unit/transmitter. A subcutaneously implantable sensor of FIG. **5**A may have an overall length ranging from about 0.3 to about 5 cm, however, longer or shorter sensors may be used. The length of the tail portion of the sensor (e.g., the portion which is subcutaneously inserted into the patient) is typically from about 0.25 to about 2 cm in length. However, longer and shorter portions may be used. All or only a part of this narrow portion may be subcutaneously implanted into the patient. The lengths of other implantable sensors will vary depending, at least in part, on the portion of the patient into which the sensor is to be implanted or inserted.

Electrodes **501**, **502** and **503** are formed using conductive traces disposed on the substrate **504**. These conductive traces may be formed over a smooth surface of the substrate or within channels formed by, for example, embossing, indenting or otherwise creating a depression in the substrate. The conductive traces may extend most of the distance along a length of the sensor, as illustrated in FIG. **5**A, although this is not necessary. For implantable sensors, particularly subcutaneously implantable sensors, the conductive traces typically may extend close to the tip of the sensor to minimize the amount of the sensor that must be implanted.

The conductive traces may be formed on the substrate by a variety of techniques, including, for example, photolithography, screen printing, or other impact or non-impact printing techniques. The conductive traces may also be formed by carbonizing conductive traces in an organic (e.g., polymeric or plastic) substrate using a laser. A description of some exemplary methods for forming the sensor is provided in U.S. patents and applications noted herein, including U.S. Pat. Nos. 5,262,035, 6,103,033, 6,175,752 and 6,284,478, the disclosures of each of which are incorporated herein by reference for all purposes.

Another method for disposing the conductive traces on the substrate includes the formation of recessed channels in one or more surfaces of the substrate and the subsequent filling of these recessed channels with a conductive material. The recessed channels may be formed by indenting, embossing, or otherwise creating a depression in the surface of the substrate. Exemplary methods for forming channels and electrodes in a surface of a substrate can be found in U.S. Pat. No. 6,103,033, the disclosure of which is incorporated herein by reference for all purposes. The depth of the channels is typically related to the thickness of the substrate. In one embodiment, the channels have depths in the range of about 12.5 μm to about 75 μm, e.g., about 25 μm to about 50 μm.

The conductive traces are typically formed using a conductive material such as carbon (e.g., graphite), a conductive polymer, a metal or alloy (e.g., gold or gold alloy), or a metallic compound (e.g., ruthenium dioxide or titanium dioxide). The formation of films of carbon, conductive polymer, metal, alloy, or metallic compound are well-known and include, for example, chemical vapor deposition (CVD), physical vapor deposition, sputtering, reactive sputtering, printing, coating, and painting. In embodiments in which the conductive material is filled into channels formed in the substrate, the conductive material is often formed using a precursor material, such as a conductive ink or paste. In these embodiments, the conductive material is deposited on the substrate using methods such as coating, painting, or applying the material using a spreading instrument, such as a coating blade. Excess conductive material between the channels is then removed by, for example, running a blade along the substrate surface.

In certain embodiments, some or all of the electrodes **501**, **502**, **503** may be provided on the same side of the substrate **504** in the layered construction as described above, or alternatively, may be provided in a co-planar manner such that two or more electrodes may be positioned on the same plane (e.g., side-by side (e.g., parallel) or angled relative to each other) on the substrate **504**. For example, co-planar electrodes may include a suitable spacing there between and/or include dielectric material or insulation material disposed between the conducting layers/electrodes. Furthermore, in certain embodiments, one or more of the electrodes **501**, **502**, **503** may be disposed on opposing sides of the substrate **504**. Variations of such double-sided sensors are illustrated in FIGS. **6** and **7**, discussed and described in detail below. In such double-sided sensor embodiments, the corresponding electrode contacts may be on the same or different sides of the substrate. For example, an electrode may be on a first side and its respective contact may be on a second side, e.g., a trace connecting the electrode and the contact may traverse through the substrate.

As noted above, analyte sensors include an analyte-responsive enzyme to provide a sensing component or sensing layer **508** proximate to or on a surface of a working electrode in order to electrooxidize or electroreduce the target analyte on the working electrode. Some analytes, such as oxygen, can be directly electrooxidized or electroreduced, while other analytes, such as glucose and lactate, require the presence of at least one component designed to facilitate the electrochemical oxidation or reduction of the analyte. The sensing layer may include, for example, a catalyst to catalyze a reaction of the analyte and produce a response at the working electrode, an electron transfer agent to transfer electrons between the analyte and the working electrode (or other component), or both.

In certain embodiments, the sensing layer includes one or more electron transfer agents. Electron transfer agents that may be employed are electroreducible and electrooxidizable ions or molecules having redox potentials that are a few hundred millivolts above or below the redox potential of the standard calomel electrode (SCE). The electron transfer agent may be organic, organometallic, or inorganic. Examples of organic redox species are quinones and species that in their oxidized state have quinoid structures, such as Nile blue and indophenol. Examples of organometallic redox species are metallocenes such as ferrocene. Examples of inorganic redox species are hexacyanoferrate (III), ruthenium hexamine etc.

In certain embodiments, electron transfer agents have structures or charges which prevent or substantially reduce the diffusional loss of the electron transfer agent during the period of time that the sample is being analyzed. For example, electron transfer agents include, but are not limited to, a redox species, e.g., bound to a polymer which can in turn be disposed on or near the working electrode. The bond between the redox species and the polymer may be covalent, coordinative, or ionic. Although any organic, organometallic or inorganic redox species may be bound to a polymer and used as an electron transfer agent, in certain embodiments the redox species is a transition metal compound or complex, e.g., osmium, ruthenium, iron, and cobalt compounds or complexes. It will be recognized that many redox species described for use with a polymeric component may also be used, without a polymeric component.

One type of polymeric electron transfer agent contains a redox species covalently bound in a polymeric composition. An example of this type of mediator is poly(vinylferrocene). Another type of electron transfer agent contains an ionically-

bound redox species. This type of mediator may include a charged polymer coupled to an oppositely charged redox species. Examples of this type of mediator include a negatively charged polymer coupled to a positively charged redox species such as an osmium or ruthenium polypyridyl cation. Another example of an ionically-bound mediator is a positively charged polymer such as quaternized poly(4-vinyl pyridine) or poly(l-vinyl imidazole) coupled to a negatively charged redox species such as ferricyanide or ferrocyanide. In other embodiments, electron transfer agents include a redox species coordinatively bound to a polymer. For example, the mediator may be formed by coordination of an osmium or cobalt 2,2'-bipyridyl complex to poly(l-vinyl imidazole) or poly(4-vinyl pyridine).

Suitable electron transfer agents are osmium transition metal complexes with one or more ligands, each ligand having a nitrogen-containing heterocycle such as 2,2'-bipyridine, 1,10-phenanthroline, 1-methyl, 2-pyridyl biimidazole, or derivatives thereof. The electron transfer agents may also have one or more ligands covalently bound in a polymer, each ligand having at least one nitrogen-containing heterocycle, such as pyridine, imidazole, or derivatives thereof. One example of an electron transfer agent includes (a) a polymer or copolymer having pyridine or imidazole functional groups and (b) osmium cations complexed with two ligands, each ligand containing 2,2'-bipyridine, 1,10-phenanthroline, or derivatives thereof, the two ligands not necessarily being the same. Some derivatives of 2,2'-bipyridine for complexation with the osmium cation include, but are not limited to, 4,4'-dimethyl-2,2'-bipyridine and mono-, di-, and polyalkoxy-2,2'-bipyridines, such as 4,4'-dimethoxy-2,2'-bipyridine. Derivatives of 1,10-phenanthroline for complexation with the osmium cation include, but are not limited to, 4,7-dimethyl-1,10-phenanthroline and mono, di-, and polyalkoxy-1,10-phenanthrolines, such as 4,7-dimethoxy-1,10-phenanthroline. Polymers for complexation with the osmium cation include, but are not limited to, polymers and copolymers of poly(l-vinyl imidazole) (referred to as "PVI") and poly(4-vinyl pyridine) (referred to as "PVP"). Suitable copolymer substituents of poly(l-vinyl imidazole) include acrylonitrile, acrylamide, and substituted or quaternized N-vinyl imidazole, e.g., electron transfer agents with osmium complexed to a polymer or copolymer of poly(l-vinyl imidazole).

Embodiments may employ electron transfer agents having a redox potential ranging from about −200 mV to about +200 mV versus the standard calomel electrode (SCE).

As mentioned above, the sensing layer may also include a catalyst which is capable of catalyzing a reaction of the analyte. The catalyst may also, in some embodiments, act as an electron transfer agent. When the analyte of interest is glucose, a catalyst such as a glucose oxidase, glucose dehydrogenase (e.g., pyrroloquinoline quinone (PQQ), dependent glucose dehydrogenase or oligosaccharide dehydrogenase, flavine adenine dinucleotide (FAD) dependent glucose dehydrogenase, or nicotinamide adenine dinucleotide (NAD) dependent glucose dehydrogenase) may be used. A lactate oxidase or lactate dehydrogenase may be used when the analyte of interest is lactate. Laccase may be used when the analyte of interest is oxygen or when oxygen is generated or consumed in response to a reaction of the analyte.

In certain embodiments, a catalyst may be attached to a polymer, cross linking the catalyst with another electron transfer agent which, as described above, may be polymeric. A second catalyst may also be used in certain embodiments. This second catalyst may be used to catalyze a reaction of a product compound resulting from the catalyzed reaction of the analyte. The second catalyst may operate with an electron transfer agent to electrolyze the product compound to generate a signal at the working electrode. Alternatively, a second catalyst may be provided in an interferent-eliminating layer to catalyze reactions that remove interferents.

Certain embodiments include a Wired Enzyme™ sensing layer (such as used in the FreeStyle Navigator® continuous glucose monitoring system by Abbott Diabetes Care Inc.) that works at a gentle oxidizing potential, e.g., a potential of about +40 mV. This sensing layer uses an osmium (Os)-based mediator designed for low potential operation and is stably anchored in a polymeric layer. Accordingly, in certain embodiments the sensing element is redox active component that includes (1) Osmium-based mediator molecules attached by stable (bidente) ligands anchored to a polymeric backbone, and (2) glucose oxidase enzyme molecules. These two constituents are crosslinked together.

In certain embodiments, the sensing system detects hydrogen peroxide to infer glucose levels. For example, a hydrogen peroxide-detecting sensor may be constructed in which a sensing layer includes enzymes such as glucose oxidase, glucose dehydrogenase, or the like, and is positioned proximate to the working electrode. The sensing layer may be covered by one or more layers, e.g., a membrane that is selectively permeable to glucose. Once the glucose passes through the membrane, it may be oxidized by the enzyme and reduced glucose oxidase can then be oxidized by reacting with molecular oxygen to produce hydrogen peroxide.

Certain embodiments include a hydrogen peroxide-detecting sensor constructed from a sensing layer prepared by crosslinking two components together, for example: (1) a redox compound such as a redox polymer containing pendent Os polypyridyl complexes with oxidation potentials of about +200 mV vs. SCE, and (2) periodate oxidized horseradish peroxidase (HRP). Such a sensor functions in a reductive mode; the working electrode is controlled at a potential negative to that of the Os complex, resulting in mediated reduction of hydrogen peroxide through the HRP catalyst.

In another example, a potentiometric sensor can be constructed as follows. A glucose-sensing layer is constructed by crosslinking together (1) a redox polymer containing pendent Os polypyridyl complexes with oxidation potentials from about −200 mV to +200 mV vs. SCE, and (2) glucose oxidase. This sensor can then be used in a potentiometric mode, by exposing the sensor to a glucose containing solution, under conditions of zero current flow, and allowing the ratio of reduced/oxidized Os to reach an equilibrium value. The reduced/oxidized Os ratio varies in a reproducible way with the glucose concentration, and will cause the electrode's potential to vary in a similar way.

The components of the sensing layer may be in a fluid or gel that is proximate to or in contact with the working electrode. Alternatively, the components of the sensing layer may be disposed in a polymeric or sol-gel matrix that is proximate to or on the working electrode. Preferably, the components of the sensing layer are non-leachably disposed within the sensor. More preferably, the components of the sensor are immobilized within the sensor.

Examples of sensing layers that may be employed are described in U.S. patents and applications noted herein, including, e.g., in U.S. Pat. Nos. 5,262,035, 5,264,104, 5,543,326, 6,605,200, 6,605,201, 6,676,819 and 7,299,082, the disclosures of each of which are incorporated herein by reference for all purposes.

Regardless of the particular components that make up a given sensing layer, a variety of different sensing layer configurations may be used. In certain embodiments, the sensing layer covers the entire working electrode surface, e.g., the entire width of the working electrode surface. In other embodiments, only a portion of the working electrode surface is covered by the sensing layer, e.g., only a portion of the width of the working electrode surface. Alternatively, the sensing layer may extend beyond the conductive material of the working electrode. In some cases, the sensing layer may also extend over other electrodes, e.g., over the counter electrode and/or reference electrode (or counter/reference is provided), and may cover all or only a portion thereof.

In other embodiments the sensing layer is not deposited directly on the working electrode. Instead, the sensing layer may be spaced apart from the working electrode, and separated from the working electrode, e.g., by a separation layer. A separation layer may include one or more membranes or films or a physical distance. In addition to separating the working electrode from the sensing layer the separation layer may also act as a mass transport limiting layer, and/or an interferent eliminating layer, and/or a biocompatible layer.

In certain embodiments which include more than one working electrode, one or more of the working electrodes may not have a corresponding sensing layer, or may have a sensing layer which does not contain one or more components (e.g., an electron transfer agent and/or catalyst) needed to electrolyze the analyte. Thus, the signal at this working electrode may correspond to background signal which may be removed from the analyte signal obtained from one or more other working electrodes that are associated with fully-functional sensing layers by, for example, subtracting the signal.

Whichever configuration of the sensing component or layer is employed, at least one factor in minimizing variations in sensor sensitivity, at least within the same sensor batch or lot (or all sensors made according to the same specification), is by strictly maintaining the dimensions (width, length, diameter and thickness) of the active area, i.e., the area of the working electrode in contact with the sensing component or layer, from sensor to sensor. Optimizing sensitivity, including reproducing substantially the same sensitivity for sensors within a lot or batch of sensors, reduces and in certain embodiments eliminates the need for sensor calibration, by the user. Accordingly, sensors that do not require a user to calibrate, using for example an in vitro test strip or the like after insertion of the sensor into the body for testing, are achieved. Examples of sensors for use in one or more embodiments of the present disclosure can be found in, among others, U.S. patent application Ser. No. 12/714,439, the disclosure of which is incorporated herein by reference for all purposes.

Calibration, when an electrochemical glucose sensor is used, generally involves converting the raw current signal (nA) into a glucose concentration (mg/dL). One way in which this conversion is done is by relating or equating the raw analyte signal with a calibration measurement (i.e., with a reference measurement), and obtaining a conversion factor (raw analyte signal/reference measurement value). This relationship is often referred to as the sensitivity of the sensor, which, once determined, may then be used to convert sensor signals to calibrated analyte concentration values, e.g., via simple division (raw analyte signal/sensitivity=calibrated analyte concentration). For example, a raw analyte signal of 10 nA could be associated with a calibration analyte concentration of 100 mg/dL, and thus, a subsequent raw analyte signal of 20 nA could be converted to an analyte concentration of 200 mg/dL, as may be appropriate for a given analyte, such as glucose, for example.

There are many ways in which the conversion factor may be obtained. For example, the sensitivity factor can be derived from a simple average of multiple analyte signal/calibration measurement data pairs, or from a weighted average of multiple analyte signal/calibration measurement data pairs. Further by way of example, the sensitivity may be modified based on an empirically derived weighting factor, or the sensitivity may be modified based on the value of another measurement, such as temperature. It will be appreciated that any combination of such approaches, and/or other suitable approaches, is contemplated herein.

For subcutaneous glucose sensors, calibration at the site of manufacture, that may be relied upon to calibrate sensor signal for the useful life of a sensor, presents numerous challenges to the feasibility. This infeasibility may be based on any of a number of factors. For example, variations in the within-lot sensitivity of the analyte sensors and/or variations in sensor drift may be too great.

The present disclosure provides sensor embodiments which attempt to address both the in vivo environmental effects and the manufacturing-based inconsistencies which can lead to variation in sensor sensitivity, and/or which obviate the need for any form of calibration, whether at the factory or by the user, at anytime prior to or during operative use of the sensor.

Certain of these sensor embodiments are double-sided, i.e., both sides of the sensor's substrate are electrochemically functional, with each side providing at least one electrode. Because both sides of the sensor are utilized, the smaller the necessary surface area required per side to host the electrodes. This space-efficient construct allows the sensor to be miniaturized and much smaller than conventional sensors, and, in particular, have a relatively narrower tail portion, i.e., at least the portion of a sensor that is constructed to be positioned beneath a skin surface of a user is miniaturized. A narrower structure reduces trauma to tissue at the implantation site, thereby reducing bleeding and the production of thrombi around the sensor. The smaller structure also minimizes impingement upon adjacent blood vessels. The smaller width of the sensor allows, in addition to perpendicular diffusion of the analyte (e.g., glucose), for the lateral diffusion of analyte molecules towards the active sensing area. These effects substantially if not completely eliminate spurious low readings.

In addition to providing micro tail sections, these double-sided sensors are designed and configured to be highly reproducible. Further, they may be fabricated by methods, techniques and equipment which minimize inconsistencies in the registration, deposition and resolution of the sensor components, as described herein.

Referring now to FIGS. **6**A-**6**C, an example of such a double-sided sensor in which an implantable portion of the sensor **600**, e.g., the distal portion of the sensor's tail section, is illustrated. In particular, FIGS. **6**A and **6**B provide top and bottom views, respectively, of tail section **600** and FIG. **6**C provides a cross-sectional side view of the same taken along lines C-C in FIG. **6**A.

Sensor tail portion **600** includes a substrate **602** (see FIG. **6**C) having a top conductive layer **604***a* which substantially covers the entirety of the top surface area of substrate **602**, i.e., the conductive layer substantially extends the entire length of the substrate to distal edge **612** and across the entire width of the substrate from side edge **614***a* to side

edge **614***b*. Similarly, the bottom conductive layer **604***b* substantially covers the entirety of the bottom side of the substrate of tail portion **600**. However, one or both of the conductive layers may terminate proximally of distal edge **612** and/or may have a width which is less than that of substrate **602** where the width ends a selected distance from the side edges **614***a*, **614***b* of the substrate, which distance may be equidistant or vary from each of the side edges.

One of the top or bottom conductive layers, here, top conductive layer **604***a*, serves as the sensor's working electrode. The opposing conductive layer, here, bottom conductive layer **604***b*, serves as a reference and/or counter electrode. Where conductive layer **604***b* serves as either a reference or counter electrode, but not both, a third electrode may optionally be provided on a surface area of the proximal portion of the sensor (not shown). For example, conductive layer **604***b* may serve as reference electrode and a third conductive trace (not shown), present only on the non-implantable proximal portion of the sensor, may serve as the sensor's counter electrode.

Disposed over a distal portion of the length of conducting layer/working electrode **604***a* is sensing component or layer **606**. Providing the sensing layer closer to the distal tip of the sensor places the sensing material in the best position for contact with the analyte-containing fluid. As only a small amount of sensing material is required to facilitate electrooxidization or electroreduction of the analyte, positioning the sensing layer **606** at or near the distal tip of the sensor tail reduces the amount of material needed. Sensing layer **606** may be provided in a continuous stripe/band between and substantially orthogonal to the substrate's side edges **614***a*, **614***b* with the overlap or intersection of working electrode **604***a* and the sensing layer **606** defining the sensor's active area. Due to the orthogonal relationship between sensing layer **606** and conductive layer **604***a*, the active area has a rectilinear polygon configuration; however, any suitable shape may be provided. The dimensions of the active area may be varied by varying either or both of the respective width dimensions of the sensing and conducting layers. The width W_S of the sensing layer **606** may cover the entire length of the working electrode or only a portion thereof. As the width W_C of the conductive layer is dictated by the width of the tail portion's substrate in this embodiment, any registration or resolution inconsistencies between the conductive layer and the substrate are obviated. In certain embodiments, the width of the sensing layer W_S is in the range from about 0.05 mm to about 5 mm, e.g., from about 0.1 mm to about 3 mm; the width of the conductive layer W_C is in the range from about 0.05 mm to about 0.6 mm, e.g., from about 0.1 mm to about 0.3 mm, with the resulting active area in the range from about 0.0025 mm^2 to about 3 mm^2, e.g., from about 0.01 mm^2 to about 0.9 mm^2.

Referring again to the electrodes, the same materials and methods may be used to make the top and bottom electrodes, although different materials and methods may also be used. With the working and reference electrodes positioned on opposing sides of the substrate as in the illustrated embodiment of FIGS. **6**A-**6**C, it is not additionally inconvenient to use two or more different types of conductive material to form the respective electrodes as only one type of conductive material would need to be applied to each side of the substrate, thereby reducing the number of steps in the manufacturing process.

Selection of the conductive materials for the respective electrodes is based in part on the desired rate of reaction of the sensing layer's mediator at an electrode. In some instances the rate of reaction for the redox mediator at the counter/reference electrode is controlled by, for example, choosing a material for the counter/reference electrode that would require an overpotential or a potential higher than the applied potential to increase the reaction rate at the counter/reference electrode. For example, some redox mediators may react faster at a carbon electrode than at a silver/silver chloride (Ag/AgCl) or gold electrode. However, as Ag/AgCl and gold are more expensive than carbon, it may be desirous to use the former materials judiciously.

The sensor embodiment of FIGS. **6**A-**6**C provides such a construct in which the full-length conductive layers **604***a*, **604***b* may be of a material such as carbon with a secondary layer of conductive layer **610** of a material such as Ag/AgCl disposed over a distal portion of bottom conductive layer **604***b* to collectively form the sensor's reference electrode. As with sensing layer **606**, conductive material **610** may be provided in a continuous stripe/band between and substantially orthogonal to the substrate's side edges **614***a*, **614***b*. While layer **610** is shown positioned on substrate **602** proximally of sensing layer **606** (but on the opposite side of the substrate), layer **610** may be positioned at any suitable location on the tail portion **600** of the reference electrode **604***b*. For example, as illustrated in FIGS. **7**A-**7**C, the secondary conductive material **710** of reference electrode **708***b* may be aligned with and/or distal to sensing layer **706** with dimensions W_S and W_C.

Referring again to sensor **600**, an insulation/dielectric layer **608***a*, **608***b* is disposed on each side **600***a*, **600***b* of the sensor, over at least the sensor's body portion (not shown), to insulate the proximal portion of the electrodes, i.e., the portion of the electrodes which in part remains external to the skin upon implantation. The top dielectric layer **608***a* disposed on the working electrode **604***a* may extend distally to but preferably not over any portion of sensing layer **606**. Alternatively, as illustrated in FIGS. **7**A-**7**C, dielectric layer **708***a* on the working electrode side of the sensor **700** may be provided prior to sensing layer **706** whereby the dielectric layer **708***a* has at least two portions spaced apart from each other on conductive layer **704***a*, best illustrated in FIG. **7**C. FIG. **7**C provides a cross-sectional side view taken along lines C-C in FIG. **7**A. The sensing material **706** is then provided in the spacing between the two portions.

As for the dielectric layer on the bottom/reference electrode side of the sensor, it may extend any suitable length of the sensor's tail section, i.e., it may extend the entire length of both of the primary and secondary conductive layers or portions thereof. For example, as illustrated in FIGS. **6**A-**6**C, bottom dielectric layer **608***b* extends over the entire bottom surface area of secondary conductive material **610** but terminates proximally of the distal edge **612** of the length of the primary conductive layer **604***b*. It is noted that at least the ends of the secondary conductive material **610** which extend along the side edges **614***a*, **614***b* of the substrate **602** are not covered by dielectric layer **608***b* and, as such, are exposed to the in vivo environment when in operative use. In contrast, as illustrated in FIGS. **7**A-**7**C, bottom dielectric layer **708***b* has a length which terminates proximally of secondary conductive layer **710** on bottom primary conductive layer **704***b* along substrate **702**. Additional conducting and dielectric layers may be provided on either or both sides of the sensors, as described above.

Finally, one or more membranes, which may function as one or more of an analyte flux modulating layer and/or an interferent-eliminating layer and/or biocompatible layer, discussed in greater detail below, may be provided about the sensor, e.g., as one or more of the outermost layer(s). In certain embodiments, as illustrated in FIG. **6**C, a first

membrane layer **616** may be provided solely over the sensing component or sensing layer **606** on the working electrode **604***a* to modulate the rate of diffusion or flux of the analyte to the sensing layer. For embodiments in which a membrane layer is provided over a single component/material, it may be suitable to do so with the same striping configuration and method as used for the other materials/components. Here, the stripe/band of membrane material **616** preferably has a width greater than that of sensing stripe/band **606**. As it acts to limit the flux of the analyte to the sensor's active area, and thus contributes to the sensitivity of the sensor, controlling the thickness of membrane **616** is important. Providing membrane **616** in the form of a stripe/band facilitates control of its thickness. A second membrane layer **618**, which coats the remaining surface area of the sensor tail, may also be provided to serve as a biocompatible conformal coating and provide smooth edges over the entirety of the sensor. In other sensor embodiments, as illustrated in FIG. **7**C, a single, homogenous membrane **718** may be coated over the entire sensor surface area, or at least over both sides of the distal tail portion. It is noted that to coat the distal and side edges of the sensor, the membrane material would have to be applied subsequent to singulation of the sensor precursors.

Based on current sensor fabrication techniques, provision of the sensor's conductive layers can be accomplished more accurately than provision of the sensing layers. As such, improving upon the accuracy of providing the sensing component on the sensor, and thus, the accuracy of the resulting active area, may significantly decrease any sensor to sensor sensitivity variability and obviate the need for calibration of the sensor. Accordingly, the present disclosure also includes methods for fabricating such analyte sensors having accurately defined active areas. Additionally, the methods provide finished sensors which are smaller than currently available sensors with micro-dimensioned tail portions which are far less susceptible to the in situ environmental conditions which can cause spurious low readings.

In one variation of the subject methods, web-based manufacturing techniques are used to perform one or more steps in fabricating the subject sensors, many of the steps of which are disclosed in U.S. Pat. No. 6,103,033. To initiate the fabrication process, a continuous film or web of substrate material is provided and heat treated as necessary. The web may have precuts or perforations defining the individual sensor precursors. The various conductive layers are then formed on the substrate web by one or more of a variety of techniques as described above, with the working and reference (or counter/reference) electrode traces provided on opposite sides of the web. As mentioned previously, the electrode traces may be provided in channels formed in the surface of the substrate material; however, with the desire to provide a sensor having a tail portion that has the smallest functional profile possible, and particularly with the sensor tail having two functional sides, the use of channels may not be optimal as it requires a thicker substrate material. Also, as mentioned previously, a third, optional electrode trace (which may function as a counter electrode, for example) may be provided on the proximal body portion of the sensor precursors. The "primary" conductive traces provided on the area of the tail portions of the precursor sensors have a width dimension greater than the intended width dimension of the tail portions of the finalized sensors. The precursor widths of these conductive traces may range from about 0.3 mm to about 10 mm including widths in range from about 0.5 mm to about 3 mm, or may be even narrower. The primary conductive layers are formed extending distally along the tail section of the sensor precursors to any suitable length, but preferably extend at least to the intended distal edge of the finalized sensors to minimize the necessary sensor tail length.

Next, the sensing layer and secondary conductive layers, if employed, are formed on the primary conductive layers on the respective sides of the substrates or substrate web. As discussed, each of these layers is preferably formed in a stripe or band of the respective material disposed orthogonally to the length of the primary conductive layer/sensor tail. With a single, continuous deposition process, the mean width of the sensing strip is substantially constant along the substrate webbing, and ultimately, from sensor to sensor. The secondary conductive layer (e.g., Ag/AgCl on the reference electrode), if provided, may also be formed in a continuous orthogonal stripe/band with similar techniques. One particular method of providing the various stripes/band of material on the sensors is by depositing, printing or coating the sensing component/material by means of an inkjet printing process (e.g., piezoelectric inkjet as manufactured by Scienion Inc. and distributed by BioDot Inc.). Another way of applying these materials is by means of a high precision pump (e.g., those which are piston driven or driven by peristaltic motion) and/or footed needle. The respective stripes/bands may be provided over a webbing of sequentially aligned sensor precursors prior to singulation of the sensors or over a plurality of sensors/electrodes where the sensors have been singulated from each other prior to provision of the one or more stripes/bands.

With both the sensing and conductive layers/strips having substantially constant widths and provided substantially orthogonal to each other, the active area which their intersection forms is also substantially constant along both the length and width of the sensor. In such embodiments, the active area (as well as the intersecting area of the primary and secondary conductive layers which form the reference electrode) has a rectilinear polygonal shape which may be easier to provide in a reproducible manner from sensor to sensor; however, any relative arrangement of the layers resulting in any suitable active area geometry may be employed.

The sensor precursors, i.e., the template of substrate material (as well as the conductive and sensing materials if provided on the substrate at the time of singulation), may be singulated from each other using any convenient cutting or separation protocol, including slitting, shearing, punching, laser singulation, etc. These cutting methods are also very precise, further ensuring that the sensor's active area, when dependent in part on the width of the sensor (i.e., the tail portion of the substrate), has very accurate dimensions from sensor to sensor. Moreover, with each of the materials (i.e., the primary and secondary conductive materials, sensing component, dielectric material, membrane, etc.) provided with width and/or length dimensions extending beyond the intended dimensions or boundaries of the final sensors, issues with resolution and registration of the materials is minimized if not obviated altogether.

The final, singulated, double-sided sensor structures have dimensions in the following ranges: widths from about 500 μm to about 100 including widths in range from about 300 μm to about 150 μm; tail lengths from about 10 mm to about 3 mm, including lengths in range from about 6 mm to about 4 mm; and thicknesses from about 500 μm to about 100 including thicknesses in range from about 300 μm to about 150 μm. As such, the implantable portions of the sensors are reduced in size from conventional sensors by approximately 20% to about 80% in width as well as in cross-section. The

reduced size minimizes bleeding and thrombus formation upon implantation of the sensor and impingement on adjacent tissue and vessels, thereby minimizing impediment to lateral diffusion of the analyte to the sensor's sensing component or sensing layer.

The substrate web may have precuts or perforations that provide guidance for the final cut employed to singulate the precursors. Depending on the layout and orientation of the sensor precursors, the singulation lines may be at fixed or varying intervals. For example, if the orientation and spacing of the sensor precursors are serial and constant over the area of the substrate material, the singulation lines will typically be at fixed intervals in all directions. However, where the sensors having irregular or asymmetrical shapes (e.g., as illustrated in FIG. **5**A) it may be preferential to orient the sensor precursors in an alternating (e.g., head to toe) or in mirroring (e.g., back to back) arrangements to minimize the unused substrate material and any of the sensor materials deposited thereon. Where the orientation of the sensor precursors is alternating or in a mirroring arrangement, the singulation lines may not be at fixed intervals.

Embodiments include sensor lots having very low variations in sensitivity of sensors within the lot. Low sensitivity variation enables sensors that do not require calibration by a user after a sensor is positioned in the body. Accordingly, in certain embodiments, sensor lots are provided that have a coefficient of variation (CV) of about 5% or less, e.g., about 4.5% or less, e.g., about 4% or less, e.g., about 3% or less.

Sensors having predictable sensor in vivo sensitivity and signal are provided. For example, sensors having predictable shelf life sensitivity drift (the period of time between manufacture and use) and predictable in vivo sensitivity drift, including substantially no shelf and in vivo sensitivity drift, are also provided. In embodiments in which sensors have drift (e.g., where the sensor sensitivity drifts an expected percentage over a certain time), a drift profile is contemplated. This drift profile may be contemplated by an algorithm of the monitoring system to determine a drift correction factor that may be applied to sensor signal to obtain a glucose measurement (mg/dL). Due, at least in part, to the high reproducibility of the manufacturing process that results in low manufacturing coefficient of variation (CV), a single drift correction factor may be used for all sensors of a given sensor manufacturing lot or batch.

In certain embodiments, sensor sensitivity may be determined post-fabrication by the manufacturer at the site of manufacture. This "factory-determined" sensitivity may then be used in an algorithm to calibrate sensor signal for the useable lifetime of the sensor, negating the need for a user to obtain a reference value, e.g., from a test strip, for calibration. Sensitivity may include determining the relationship of sensor signal to a reference such as an in vitro reference (a known glucose level to which one or more sensors of a sensor lot may be compared). Sensitivity may include determining a conversion factor as described herein. In certain embodiments, the determined sensitivity may be further augmented. For example, one or more additional factors (e.g., to account for the relationship of blood to subcutaneous tissue glucose, effect of oxygen, temperature, etc.) may be contemplated. In any event, a sensitivity value is determined. Exemplary calibration protocols are described, e.g., in U.S. Pat. No. 7,299,082, the disclosure of which is incorporated herein by reference for all purposes.

Because the sensitivities of each sensor of a given manufacturing lot are substantially the same according to the embodiments herein, the factory-determined sensitivity may be applied to all sensors of such a lot, i.e., a single calibration algorithm may be used for all the sensors of a given lot. In one embodiment, the information is programmed or is programmable into software of the monitoring system, e.g., into one or more processors. For example, the factory-determined sensitivity may be provided to a user with a sensor(s) and uploaded to a calibration algorithm manually or automatically (e.g., via bar code and reader, or the like). Calibration of sensor signal may then be implemented using suitable hardware/software of the system.

A mass transport limiting layer or membrane, e.g., an analyte flux modulating layer, may be included with the sensor to act as a diffusion-limiting barrier to reduce the rate of mass transport of the analyte, for example, glucose or lactate, into the region around the working electrodes. The mass transport limiting layers are useful in limiting the flux of an analyte to a working electrode in an electrochemical sensor so that the sensor is linearly responsive over a large range of analyte concentrations. Mass transport limiting layers may include polymers and may be biocompatible. A mass transport limiting layer may provide many functions, e.g., biocompatibility and/or interferent-eliminating, etc.

A membrane may be formed by crosslinking in situ a polymer, modified with a zwitterionic moiety and a non-pyridine copolymer component. The modified polymer may be made from a precursor polymer containing heterocyclic nitrogen groups. For example, a precursor polymer may be polyvinylpyridine or polyvinylimidazole. Embodiments also include membranes that are made of a polyurethane, or polyether urethane, or chemically related material, or membranes that are made of silicone, and the like.

Optionally, another moiety or modifier that is either hydrophilic or hydrophobic, and/or has other desirable properties, may be used to "fine-tune" the permeability of the resulting membrane to an analyte of interest. Optional hydrophilic modifiers, such as poly(ethylene glycol), hydroxyl or polyhydroxyl modifiers, may be used to enhance the biocompatibility of the polymer or the resulting membrane.

The membrane may also be formed in situ by applying an alcohol-buffer solution of a crosslinker and a modified polymer over an enzyme-containing sensing layer and allowing the solution to cure for about one to two days or other appropriate time period. The crosslinker-polymer solution may be applied to the sensing layer by placing a droplet or droplets of the solution on the sensor, by dipping the sensor into the solution, or the like. Generally, the thickness of the membrane is controlled by the concentration of the solution, by the number of droplets of the solution applied, by the number of times the sensor is dipped in the solution, or by any combination of these factors. A membrane applied in this manner may have any combination of the following functions: (1) mass transport limitation, i.e., reduction of the flux of analyte that can reach the sensing layer, (2) biocompatibility enhancement, or (3) interferent reduction. Exemplary mass transport layers are described in U.S. patents and applications noted herein, including, e.g., in U.S. Pat. Nos. 5,593,852, 6,881,551 and 6,932,894, the disclosures of each of which are incorporated herein by reference for all purposes.

A sensor may also include an active agent such as an anticlotting and/or antiglycolytic agent(s) disposed on at least a portion a sensor that is positioned in a user. An anticlotting agent may reduce or eliminate the clotting of blood or other body fluid around the sensor, particularly after insertion of the sensor. Examples of useful anticlotting agents include heparin and tissue plasminogen activator (TPA), as well as other known anticlotting agents. Embodi-

ments may include an antiglycolytic agent or precursor thereof. Examples of antiglycolytic agents are glyceraldehyde, fluoride ion, and mannose.

The electrochemical sensors of the present disclosure may employ any suitable measurement technique, e.g., may detect current, may employ potentiometry, etc. Techniques may include, but are not limited to, amperometry, coulometry, and voltammetry. In some embodiments, sensing systems may be optical, colorimetric, and the like.

The subject analyte measurement systems may include an optional alarm system that, e.g., based on information from a processor, warns the patient of a potentially detrimental condition of the analyte. For example, if glucose is the analyte, an alarm system may warn a user of conditions such as hypoglycemia and/or hyperglycemia and/or impending hypoglycemia, and/or impending hyperglycemia. An alarm system may be triggered when analyte levels approach, reach or exceed a threshold value. An alarm system may also, or alternatively, be activated when the rate of change, or acceleration of the rate of change, in analyte level increase or decrease approaches, reaches or exceeds a threshold rate or acceleration. A system may also include system alarms that notify a user of system information such as battery condition, calibration, sensor dislodgment, sensor malfunction, etc. Alarms may be, for example, auditory and/or visual. Other sensory-stimulating alarm systems may be used including alarm systems which heat, cool, vibrate, or produce a mild electrical shock when activated.

The subject disclosure also includes sensors used in sensor-based drug delivery systems. The system may provide a drug to counteract the high or low level of the analyte in response to the signals from one or more sensors. Alternatively, the system may monitor the drug concentration to ensure that the drug remains within a desired therapeutic range. The drug delivery system may include one or more (e.g., two or more) sensors, a processing unit such as a transmitter, a receiver/display unit, and a drug administration system. In some cases, some or all components may be integrated in a single unit. A sensor-based drug delivery system may use data from the one or more sensors to provide necessary input for a control algorithm/mechanism to adjust the administration of drugs, e.g., automatically or semi-automatically. As an example, a glucose sensor may be used to control and adjust the administration of insulin from an external or implanted insulin pump.

Referring now to FIGS. **8**A-**12**B, the continuous analyte measurement systems illustrated therein are particularly suitable for use with the double-sided analyte sensors disclosed herein. These systems include a skin-mounted portion or assembly and a remote portion or assembly. The skin-mounted portion includes at least the data transmitter, the transmitter battery and electrical contacts for electrically coupling the implanted sensor with the transmitter, and has a housing or base which is constructed to externally mount to the patient's skin and to mechanically and electrically couple the implanted sensor with the transmitter. Removably held or positioned within the housing/base structure is a connector piece having an electrical contact configuration which, when used with a double-sided sensor, enables coupling of the sensor to the transmitter in a low-profile, space-efficient manner. The remote portion of the system includes at least a data receiver and a user interface which may also be configured for test strip-based glucose monitoring. Various embodiments of these systems and methods of using them are now described in greater detail.

FIGS. **8**A and **8**B illustrate one embodiment of the skin-mounted portion or assembly **800** of a continuous analyte monitoring system of the present disclosure. Assembly **800** includes a connector or base **802** and a transmitter **804** both having rectangular or square constructs which, when operatively coupled together, are mounted side-by-side in the same plane on the skin. The underside of both components has an adhesive layer for securing to the skin surface. Connector **802** encases a conductive core or elongated member **806** extending along its length. Conductive core **806** is shown having a cylindrical configuration but may have any suitable shape. The connector body and conductive core may be made of any suitable non-conductive and conductive materials, respectively. To provide a non-rigid or semi-flexible embodiment, connector body **802** or the portion of it about the conductive core **806** may be made of a flexible or compressible material such as silicone, etc., and connector core **806** may be made of a conductive polymeric material, e.g., carbon-doped silicone. The connector **802** and its connector core **806** may be provided in two parts or halves **802***a* and **802***b*, whereby the system's analyte sensor **808**, here, having two functional sides **808***a* and **808***b*, may be sandwiched therebetween. Each of the inner ends of core **806** abuts a respective electrode **814***a*, **814***b* of sensor **808**. A bracket or fixture **816** may be employed to clamp together or apply pressure on opposing ends of the two connector body **802**/connector core **806** pieces to ensure a sufficient, continuous electrical contact between connector core **806** and sensor electrodes **814***a*, **814***b*. The body of the connector **802** has hollowed holes or receptacles **810***a*, **810***b* within a side thereof which extend to or within conductive core **806**. Holes **810***a*, **810***b* are dimensioned and spaced for receiving corresponding conductive pins **812***a*, **812***b* extending from an end **815** of transmitter **804**. When the connector **802** and transmitter **804** are operatively coupled, as illustrated in FIG. **8**B, pins **812***a*, **812***b* extend within and are in electrical communication with conductive core **806**, and thus, with sensor **808**. The compressible, non-conductive material of connector **802** provides a substantially hermetic seal between transmitter **804** and sensor **808**. The transmitter housing may house a battery (not shown) for powering the transmitter **804**, the sensor **808**, and at least a portion of the system's control electronics, e.g., the data processing unit, etc.

FIGS. **9**A-**9**E illustrate another embodiment of the skin-mounted portion or assembly **900** of a continuous analyte monitoring system of the present disclosure. With reference to FIG. **9**A, assembly **900** includes a transmitter **902** mounted atop a mounting structure or base **904**, the underside of which has an adhesive layer for securing to the skin surface. Here, transmitter **902** has a round foot print and a convex, low-profile top surface. The transmitter housing may house a battery (not shown) for powering the transmitter **902**, the sensor **906**, and at least a portion of the system's control electronics, e.g., the data processing unit, etc. A raised rim **916** or similar feature on the top surface **912** of base **904** is shaped and dimensioned to securely hold transmitter **902** in a snap-fit configuration. Base **904** also has a centrally disposed cradle **908** on its top surface **912** for receiving and snugly holding a connector **910**. As best shown in FIG. **9**B, a sidewall of the base **904** has an outwardly extending portion **914** which defines a slit or keyhole therein to receive a sensor **906** (as well as an insertion needle, as will be explained below) when operatively held by connector **910**. An aperture (not shown) within the bottom of cradle **908** allows passage of sensor tail **906***b* upon placement of connector **910** within the cradle **908**. Cradle **908** may be sized to compress the ends of the

connector **910** toward each other so as to ensure a constant electrical connection between the connector **910** and sensor **906**.

As illustrated in FIGS. **9**C-**9**E, connector **910** has a cylindrical configuration having several concentric layers or materials: a non-conductive inner member **910***a*, a conductive intermediate layer **910***b*, and an outer dielectric cover or shell **910***c*. In one embodiment, the cylindrical connector is compliant, with each of its layers made of compliant material(s) as described with respect to the embodiment of FIGS. **8**A and **8**B. The optional inner member **910***a* is made of a non-conductive compliant or substantially rigid material which extends through a hole **906***c* at the proximal end **906***a* of sensor **906** and, thus, acts as an alignment pin. The terminal ends of the working and reference electrodes of double-sided sensor **906** form a conductive area or ring **906***d* about hole **906***c*. Conductive ring **906***d* may be made of gold or another highly conductive material. The connector's intermediate layer **910***b* is made of a compliant conductive material, such as a conductive polymeric material as described with respect to the embodiment of FIGS. **8**A and **8**B, which abuts against both sides of conductive area **906***d* of the sensor. The outer shell **910***c* of the connector, which extends over and insulates each of the conductive ends of the intermediate layer **910***b*, is made of a compliant dielectric material, such as silicone, which ensures that the interconnection between the transmitter, connector and sensor is hermetically sealed. On a top surface of outer shell **910***c* are a pair of bores or holes **918** for receiving a corresponding pair of pins or plugs **920** extending from the bottom side of transmitter **902**. The bores and pins may have respective mating configurations to ensure a snug fit and hermetically seal between transmitter **902** and connector **910**. For example, as illustrated in FIG. **9**E, bores **918** may have a stepped configuration and pins **920** may have a conical configuration. At least the distal tip **922** of each pin **920** is made of a conductive material, such as gold, to establish electrical communication between transmitter **902** and sensor **906**.

FIGS. **10**A-**10**F illustrate various steps in a method of the present disclosure for mounting the continuous analyte monitoring system's on-skin assembly **900**, including implanting sensor **906** within the skin, utilizing an insertion device **1000** of the present disclosure. However, the sensor/connector may be configured to be manually inserted/mounted without the use of an insertion device.

Insertion device **1000** comprises a body **1002** having a distal base portion **1008** having a bottom surface configured for placement on the skin surface **1005**. It is noted that the figures show, with solid drawing lines, components of the insertion device and the analyte monitoring system that would otherwise not be visible when positioned or housed within device body **1002** for purposes of illustration and ease of description. For example, in FIGS. **10**A-**10**C, mounting base **904** of assembly **900** (FIG. **9**A) is shown releasably held within an opening in the bottom surface of device body **1002**. Insertion device **1000** further includes a plunger mechanism **1004** positioned within the housing **1002** and movable in a direction perpendicular to the skin surface **1005**. The distal end of the plunger mechanism **1004** carries an insertion needle **1006**. The components of insertion device **1000** are typically formed using structurally rigid materials, such as metal or rigid plastic. Preferred materials include stainless steel and ABS (acrylonitrile-butadiene-styrene) plastic.

With reference to FIGS. **11**A and **11**B, the shaft of insertion needle **1006** may include a longitudinal opening, having a cross-sectional shape for releasably carrying the forward edge **906***e* of the analyte sensor (see FIG. **11**B). In particular, the needle shaft **1006** may be C-, U- or V-shaped to support the sensor and limit the amount that the sensor may bend or bow during insertion. The cross-sectional width and height of insertion needle **1006** are appropriately sized to hold the sensor being inserted. In the illustrated embodiment, insertion needle **1006** is pointed and/or sharp at the tip **1012** to facilitate penetration of the skin of the patient. A sharp, thin insertion needle may reduce pain felt by the patient upon insertion of the sensor. In other embodiments, the tip of the insertion needle has other shapes, including a blunt or flat shape. These embodiments may be particularly useful when the insertion needle is not intended to penetrate the skin but rather serves as a structural support for the sensor as the sensor is pushed into the skin. As such, the sensor itself may include optional features to facilitate insertion. For example, sensor **906** may have a pointed tail portion **906***b* to ease insertion. In addition, the sensor may include a barb (not shown) which helps retain the sensor in the subcutaneous tissue upon insertion. The sensor may also include a notch (not shown) that can be used in cooperation with a corresponding structure (not shown) in the insertion needle to apply pressure against the sensor during insertion, but disengage as the insertion needle is removed.

To commence the sensor insertion/transmitter mounting procedure, the front edge **906***e* (see FIGS. **11**A and **11**B) of sensor **906**, which is operatively held within connector **910** (as shown in FIG. **9**B but not evident in the side views provided in FIGS. **10**A-**10**F), is slid into placed within insertion needle **1006**. In turn, the pre-loaded insertion needle **1006** is operatively loaded onto the distal end of plunger **1004**. Mounting base **904** with the attached connector cradle **908** is then coupled to the bottom end of insertion body **1002**, such as by a snap-fit arrangement that is releasable upon complete downward displacement of plunger **1004**. The collective assembly is then placed on the target skin surface **1005**, as shown in FIG. **10**A. The user **1010** then applies a downward force on plunger **1004**, as shown in FIG. **10**B, which force is transferred against insertion needle **1006** and/or sensor **906** to carry the sensor **906** into the skin **1005** of the patient. The plunger **1004** may be biased to require a certain amount of force to avoid accidental depression and to provide for very fast penetration and removal of the insertion needle from the skin. For example, a cocked or wound spring, a burst of compressed gas, an electromagnet repelled by a second magnet, or the like, may be used to provide the biasing force on plunger **1004**. In one embodiment (as shown), the plunger force is applied to insertion needle **1006**, and optionally to sensor **906**, to push a portion of both the sensor **906** and the insertion needle **1006** through the skin **1005** of the patient and into the subcutaneous tissue. Alternatively, the force may be applied only to the sensor **906**, pushing it into the skin **1005**, while the insertion needle **1006** remains stationary and provides structural support to the sensor **906**. In either embodiment, a hard stop to the sensor's continued penetration into the skin **1005** is provided when the connector **910** is seated within cradle **908**. Once fully depressed, plunger **1004** is then released by the user **1010**, as illustrated in FIG. **10**C. With the upward spring biased placed on the plunger, the insertion needle is quickly retracted from the skin **1005** with sensor **906** remaining in the subcutaneous tissue due to frictional forces between the sensor and the patient's tissue. If the sensor includes the optional barb, then this structure may also facilitate the retention of the sensor within the interstitial tissue as the barb catches in the tissue. Release of plunger **1004** may also

automatically decouple mounting base **904** from insertion body **1002**, or a separate trigger mechanism (not shown) may be provided on the device to perform such function. The adhesive on the skin-contacting surface of base **904** retains it in place when the insertion device **1000** is removed from the skin, as illustrated in FIG. **10**D. The insertion device **1000** is typically manufactured to be disposable to avoid the possibility of contamination. Alternatively, the insertion device **1000** may be sterilized and reused with only the insertion needle being disposable. After removal of the insertion device **1000** from the skin **1005**, the transmitter **902** may then be manually coupled onto the mounting base **904**, as shown in FIG. **10**E. Specifically, the conductive pins **920** of transmitter **902** are positioned within the corresponding holes **918** within connector **910** (see FIG. **9**E). In an alternate embodiment, the insertion device may be configured to mechanically mount the transmitter **902** which would be pre-mounted to the mounting base **904**. In either variation, control electronics (not shown) housed within transmitter **902** enables monitoring of glucose (or other target analytes) by sensor **906** and transmission of such analyte data by transmitter **902** to the remote receiver unit (not shown) according to the pre-programmed protocols.

As mentioned previously, a battery may be provided within the transmitter housing to power the transmitter **902** as well as to provide the necessary electrical signals to sensor **906**. The battery may be rechargeable/replaceable through a door (not shown) provided in the transmitter housing. To minimize the size of the on-skin unit, the battery may be relatively small, having only a moderately-lasting charge, e.g., about 3-14 days more or less. In another variation, the battery is not rechargeable or replaceable, but is disposed of along with the transmitter upon expiration of the battery charge. As this arrangement is more expensive, having a battery/transmitter that has a longer-lasting charge, e.g., about 6 months to a year may be necessary; of course, the tradeoff being a larger unit. Still yet, the transmitter may be extensively reusable with the battery being disposable along with the sensor upon expiration of the sensor's useful life, typically, between about 3 to about 14 days, in which case, the battery may be very small to last only as long as the sensor.

FIGS. **12**A and **12**B illustrate top and bottom views, respectively, of an on-skin mounting unit or base **1050** of another continuous analyte monitoring system of the present disclosure in which the battery is provided in the mounting base rather than in the transmitter. The conductive proximal portion **1054***a* (i.e., the electrodes) of an analyte sensor **1054** is positionable or positioned within a slot or slit **1066** within a side wall of base **1050** with the tail portion **1054***b* extending transversely from the base. The proximal sensor portion **1054***a* lies between a two-piece electrical core or connector **1056** which is permanently housed within mounting unit **1050**. The connector has contacts **1056***a* (see FIG. **12**A) which extend to a top surface **1052** of base **1050** for receiving corresponding conductive pins of the transmitter (not shown). The entire base **1050** may be fabricated of a compressible, insulating material, such as silicone. Features **1064** on opposing sidewalls of the base aligned with the ends of connector **1056** are compressible to ensure that connector **1056** maintains continuous electrical contact with sensor **1054**. Such compression features **1064** may comprise a flexure such as a living hinge or the like. To prevent any movement of sensor **1054** upon placement within skin tissue, an optional alignment pin **1058** may be provided through a hole within proximal sensor portion **1054***a*. The opposing ends of the alignment pin **1058** may extend beyond the sidewalls of the base to physically engage with corresponding features of the transmitter (not shown) upon coupling with the base unit **1050**. Also housed within base unit **1050** is a battery **1060** having high (+) and ground (−) connector contacts **1060***a*, **1060***b*, respectively. As seen in FIG. **12**A, the connector contacts **1056***a* and battery contacts **1060***a*, **1060***b* have receptacle configurations to matingly receiving corresponding pin contacts of a transmitter (not shown) when mounted atop mounting base **1050**. As such, electrical communication is established between sensor **1054** and the transmitter, and power is supplied to the transmitter and to the on-skin unit as a whole. The coupling between the transmitter and mounting base may be by way of a snap-fit arrangement between the pins and receptacles, which also allows for easy removal when replacing the base unit **1050** upon expiration of the battery **1060** and/or useful life of the sensor **1054** with the more expensive transmitter component being reusable.

All of the on-skin portions of the subject continuous monitoring systems have a very low-profile configuration. While certain embodiments have at least one dimension that is extremely small, other dimensions may be slightly greater to provide the necessary volume to house the various components of the on-skin units. For example, an on-skin unit may have a very low height dimension, but have relatively greater width and length dimensions. On the other hand, the width/length dimensions may be very small with the height being relatively greater. The optimal dimensions of a particular on-skin unit may depend on where on the body the unit is intended to be mounted. One exemplary set of dimensions for an on-skin unit of the present disclosure includes a width from about 7.5 to about 8.5 mm, a length from about 10 to about 11 mm, and a height from about 2.5 to about 3.3 mm.

Exemplary analyte monitoring systems are described in, for example, U.S. patent application Ser. No. 12/698,124 entitled "Compact On-Body Physiological Monitoring Devices and Methods Thereof" and in U.S. patent application Ser. No. 12/730,193 entitled "Methods of Treatment and Monitoring Systems for Same", the disclosures of each of which are incorporated herein by reference for all purposes. Exemplary methods and systems for inserting a an analyte sensor are described in, for example, U.S. Pat. No. 6,990,366, U.S. patent application Ser. Nos. 12/698,124, 12/698,129, now U.S. Pat. No. 9,402,544, and U.S. Provisional Application Nos. 61/238,159, 61/238,483 and 61/249,535, the disclosures of each of which are incorporated herein by reference for all purposes.

Although the subject sensors may be inserted anywhere in the body, it is often desirable that the insertion site be positioned so that the on-skin sensor control unit can be concealed. In addition, it is often desirable that the insertion site be at a place on the body with a low density of nerve endings to reduce the pain to the patient. Examples of preferred sites for insertion of the sensor and positioning of the on-skin sensor control unit include the abdomen, thigh, leg, upper arm, and shoulder.

In one embodiment, the subject sensors are injected between 2 to 12 mm into the interstitial tissue of the patient for subcutaneous implantation. Preferably, the sensor is injected 3 to 9 mm, and more preferably 5 to 7 mm, into the interstitial tissue. Other embodiments of the present disclosure may include sensors implanted in other portions of the patient, including, for example, in an artery, vein, or organ. The depth of implantation varies depending on the desired implantation target. Sensor insertion angles usually range from about 10° to about 90°, typically from about 15° to

about 60°, and often from about 30° to about 45°. The construct of the insertion device, of course, will vary depending on the desired angle of insertion.

In one embodiment, a continuous analyte measurement system may include a base unit configured for mounting on a skin surface, an analyte sensor comprising two functional sides, a proximal portion configured for positioning within the base unit and a distal portion configured for insertion into the skin surface, and a conductive member positionable within the base unit and in electrical contact with the two functional sides of analyte sensor.

The proximal portion of the analyte sensor may have a planar configuration and the conductive member may be mechanically and electrically coupled to the two functional sides of the proximal portion of the analyte sensor.

The base unit may be compressible on opposing sides at least about the conductive member.

Furthermore, the system may include a component for compressing the opposing ends of the conductive member.

In one aspect, the component for compressing may be flexures on opposing sides of the base unit about the conductive member.

In another aspect, the component for compressing may be a clamping fixture positionable on opposing sides of the base unit about the conductive member.

In one aspect, the system may include an alignment pin extending through the proximal portion of the analyte sensor.

The base unit may be a non-conductive compressible material.

The non-conductive compressible material may be silicone.

The conductive connector may be a conductive compressible material.

The conductive compressible material may be carbon-doped silicone.

In a further aspect, the system may include a transmitter configured for mounting to the base unit in a low-profile manner, wherein the base unit includes a pair of receptacles for receiving a corresponding pair of conductive pins of the transmitter, and the conductive pins contact the conductive member when the transmitter is operatively mounted to the base unit.

The transmitter may mount with the base unit in a side-by-side configuration.

The transmitter may mount atop the base unit.

The transmitter may house a battery.

The base unit may house a battery.

Moreover, the base unit may include a second pair of receptacles for receiving a corresponding second pair of conductive pins of the transmitter, wherein the conductive pins contact the battery when the transmitter is operatively mounted to the base unit.

The base unit may include a cradle therein for receiving and holding the conductive member.

The cradle may compress opposing ends of the conductive member when held within the cradle.

The conductive member may include a conductive core and an insulating shell covering the conductive core.

In one aspect, the conductive member may include a non-conductive inner member within the conductive core, wherein the non-conductive inner member extends through an opening in the analyte sensor.

The base unit may include an adhesive bottom for adhering to the skin surface.

The base unit may include an opening therein through which the distal end of the analyte sensor extends.

The distal end of the analyte sensor may extend along a sidewall of the base unit.

Regarding methodology, the subject methods may include each of the mechanical and/or activities associated with use of the devices described. As such, methodology implicit to the use of the devices described forms part of the present disclosure. Other methods may focus on fabrication of such devices. The methods that may be performed according to embodiments herein and that may have been described above and/or claimed below, the operations have been described in selected typographical sequences. However, the sequences have been selected and so ordered for typographical convenience and are not intended to imply any particular order for performing the operations.

As for other details of the present disclosure, materials and alternate related configurations may be employed as within the level of those with skill in the relevant art. The same may hold true with respect to method-based aspects of the present disclosure in terms of additional acts as commonly or logically employed. In addition, though embodiments of the present disclosure have been described in reference to several examples, optionally incorporating various features, the present disclosure is not to be limited to that which is described or indicated as contemplated with respect to each variation of the present embodiments. Various changes may be made to the embodiments described and equivalents (whether recited herein or not included for the sake of some brevity) may be substituted without departing from the true spirit and scope of the present disclosure. Any number of the individual parts or subassemblies shown may be integrated in their design. Such changes or others may be undertaken or guided by the principles of design for assembly.

Also, it is contemplated that any optional feature of the inventive variations described may be set forth and claimed independently, or in combination with any one or more of the features described herein. Reference to a singular item, includes the possibility that there are plural of the same items present. More specifically, as used herein and in the appended claims, the singular forms "a," "an," "said," and "the" include plural referents unless the specifically stated otherwise. In other words, use of the articles allow for "at least one" of the subject item in the description above as well as the claims below. It is further noted that the claims may be drafted to exclude any optional element. As such, this statement is intended to serve as antecedent basis for use of such exclusive terminology as "solely," "only" and the like in connection with the recitation of claim elements, or use of a "negative" limitation. Without the use of such exclusive terminology, the term "comprising" in the claims shall allow for the inclusion of any additional element—irrespective of whether a given number of elements are enumerated in the claim, or the addition of a feature could be regarded as transforming the nature of an element set forth in the claims. Stated otherwise, unless specifically defined herein, all technical and scientific terms used herein are to be given as broad a commonly understood meaning as possible while maintaining claim validity.

In all, the breadth of the present disclosure is not to be limited by the examples provided.

What is claimed is:

1. A continuous analyte measurement system, comprising:

a memory;

a base unit configured for mounting on a skin surface;

an analyte sensor comprising a proximal portion configured for positioning within the base unit and a distal portion configured for insertion through the skin sur-

face, wherein the analyte sensor is configured to generate one or more signals related to an analyte level; and

a conductive member positionable within the base unit and in electrical contact with the analyte sensor;

wherein the continuous analyte measurement system is configured to determine the analyte level using at least a drift correction factor associated with the analyte sensor, the drift correction factor determined by an algorithm of the continuous analyte measurement system using a drift profile; and

wherein the drift profile is programmed into the memory of the continuous analyte measurement system prior to insertion of the distal portion of the sensor through the skin surface.

2. The system of claim **1**, wherein at least the proximal portion of the analyte sensor has a planar configuration and wherein the conductive member is mechanically and electrically coupled to the analyte sensor.

3. The system of claim **1**, wherein the base unit is compressible on opposing sides at least about the conductive member, or comprises a component for compressing the opposing ends of the conductive member.

4. The system of claim **3**, wherein the component for compressing comprises flexures on opposing sides of the base unit about the conductive member or else comprises a clamping fixture positionable on opposing sides of the base unit about the conductive member.

5. The system of claim **1**, further comprising an alignment pin extending through the proximal portion of the analyte sensor.

6. The system of claim **1**, wherein the base unit comprises a non-conductive compressible material, comprising silicone.

7. The system of claim **1**, wherein the conductive member comprises a conductive compressible material, comprising carbon-doped silicone.

8. The system of claim **1**, further comprising a transmitter configured for mounting to the base unit in a low-profile manner, wherein the base unit further comprises a first pair of receptacles for receiving a corresponding first pair of conductive pins of the transmitter, wherein the conductive pins contact the conductive member when the transmitter is operatively mounted to the base unit.

9. The system of claim **8**, wherein the transmitter is configured to mount with the base unit in a side-by-side configuration or atop the base.

10. The system of claim **8**, wherein the transmitter or the base unit houses a battery.

11. The system of claim **10**, wherein the base unit houses the battery, and wherein the base unit further comprises a second pair of receptacles for receiving a corresponding second pair of conductive pins of the transmitter, wherein the conductive pins contact the battery when the transmitter is operatively mounted to the base unit.

12. The system of claim **1**, wherein the base unit comprises a cradle therein for receiving and holding the conductive member, wherein the cradle compresses opposing ends of the conductive member when held within the cradle; wherein the conductive member comprises a conductive core and an insulating shell covering the conductive core; wherein the conductive member further comprises a non-conductive inner member within the conductive core; and wherein the non-conductive inner member extends through an opening in the analyte sensor.

13. The system of claim **1**, wherein the base unit comprises an adhesive bottom for adhering to the skin surface or wherein the base unit comprises an opening therein through which the distal portion of the analyte sensor extends.

14. The system of claim **1**, wherein the distal portion of the analyte sensor extends along a sidewall of the base unit.

15. The system of claim **1**, wherein the analyte sensor does not require a user-initiated calibration during in vivo use of the analyte sensor.

16. The system of claim **1**, wherein the analyte sensor comprises a plurality of electrodes including a working electrode comprising an analyte-responsive enzyme bonded to a polymer disposed on the working electrode.

17. The system of claim **16**, wherein the analyte-responsive enzyme is chemically bonded to the polymer.

18. The system of claim **16**, wherein the working electrode further comprises a mediator.

19. The system of claim **1**, wherein the analyte sensor comprises a plurality of electrodes including a working electrode comprising a mediator bonded to a polymer disposed on the working electrode.

20. The system of claim **19**, wherein the mediator is chemically bonded to the polymer.

* * * * *