US 20060227545A1

(19) United States

(12) Patent Application Publication

(10) Pub. No.: US 2006/0227545 A1

(43) Pub. Date: Oct. 12, 2006

Mok et al.

(54) LIGHT EMITTING PANEL

(76) Inventors: **Thye Linn Mok**, Loveland, CO (US); **Siew Kim Tan**, Loveland, CO (US); **Shin Wen Ng**, Loveland, CO (US)

Correspondence Address:
AVAGO TECHNOLOGIES, LTD.
P.O. BOX 1920
DENVER, CO 80201-1920 (US)

(21) Appl. No.: **11/103,172**

(22) Filed: **Apr. 11, 2005**

Publication Classification

(51) **Int. Cl.**
B60Q 1/26 (2006.01)

(52) **U.S. Cl.** **362/227**

(57) **ABSTRACT**

In one embodiment, a light emitting panel includes a base panel and a plurality of light emitting elements mounted to the base panel. Each of the light emitting elements produces an illumination pattern having a region of substantially uniform intensity that extends over a radiation angle of at least about 60°. One or more light conditioners are positioned adjacent the base panel to receive and condition light produced by the light emitting elements.

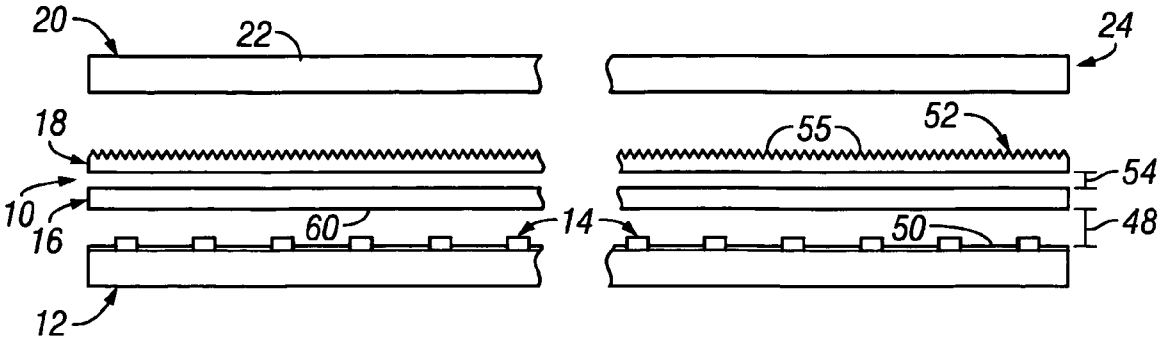

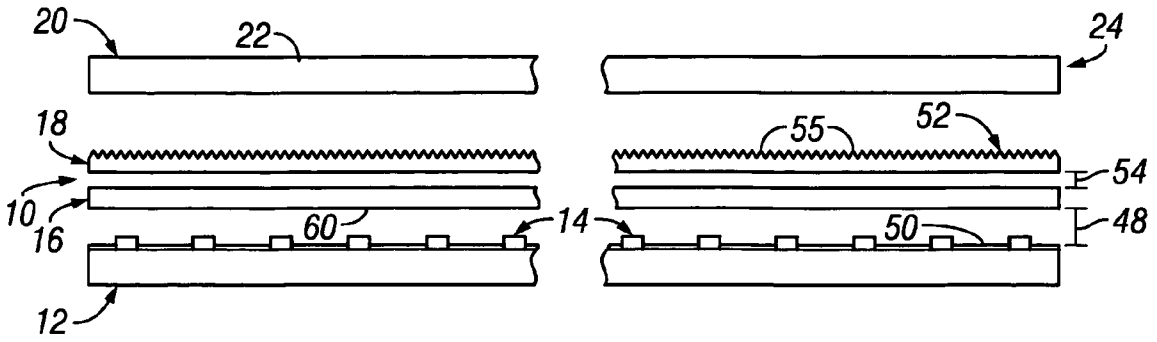

FIG. 1

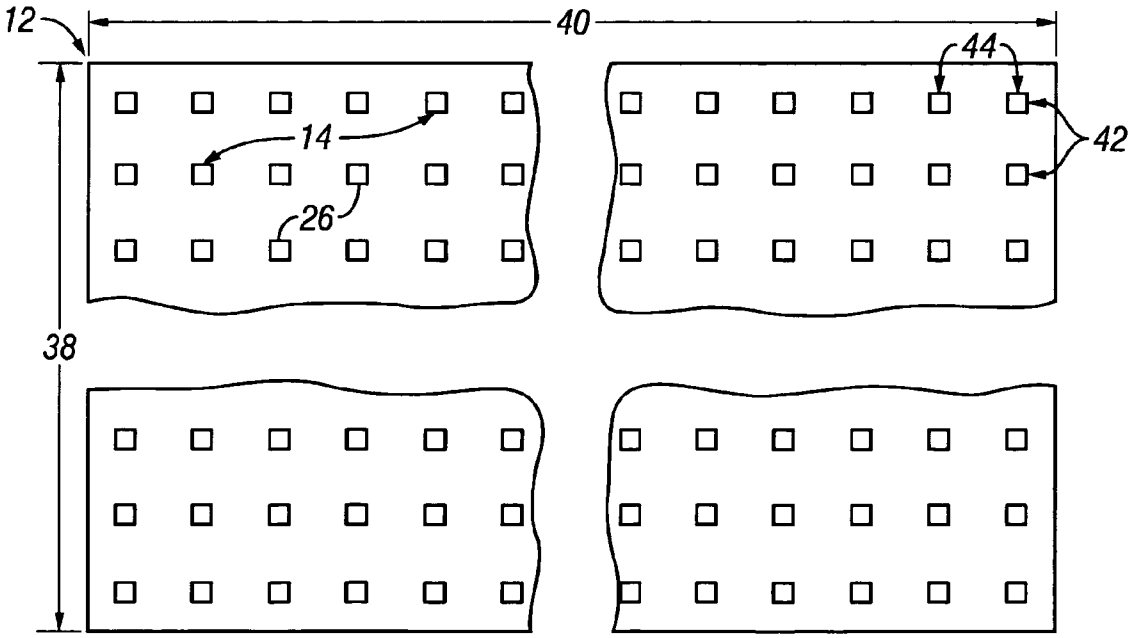

FIG. 2

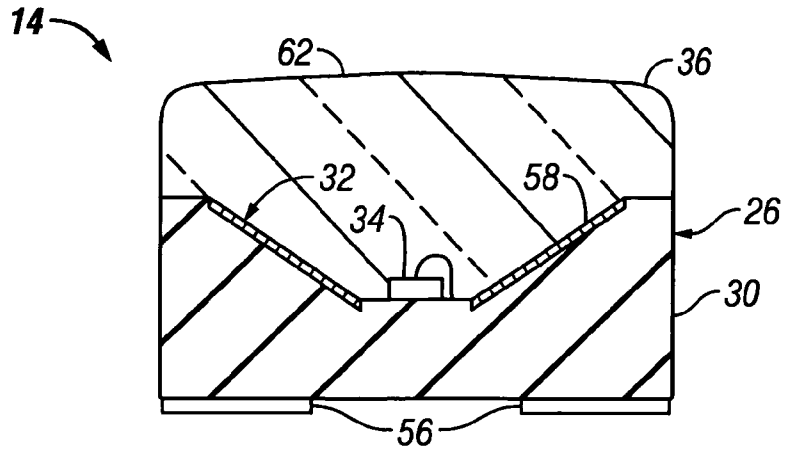

FIG. 3

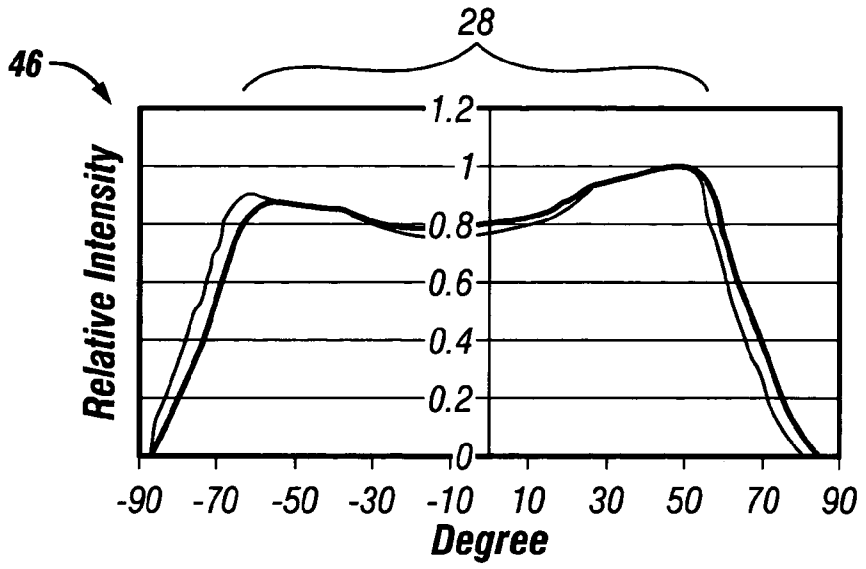

FIG. 4

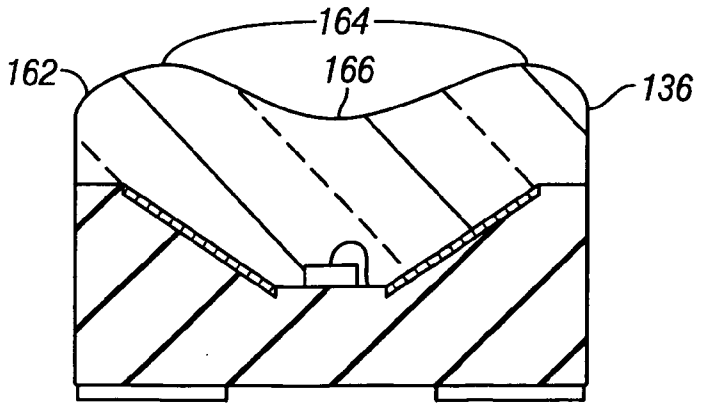

FIG. 5

LIGHT EMITTING PANEL

BACKGROUND

[0001] Light emitting panels are commonly used as backlights for display systems (e.g, liquid crystal displays), although they may be used for other purposes as well. Light emitting panels commonly used for backlighting displays include cold cathode florescent lamps (CCFL) and electro-luminescent panels. These types of light emitting panels are advantageous in that they provide substantially uniform illumination over the entire area of the panel, thus providing even illumination for the display. Unfortunately, however, CCFL and electro-luminescent panels are not without their disadvantages, including poor color rendition. In addition, they may involve the use of hazardous materials, such as mercury.

[0002] Partly in an effort to address the shortcomings of CCFL and electro-luminescent panels, light emitting panels have been developed that utilize light emitting diodes (LEDs) as the light sources. Besides being mercury-free, LED light emitting panels typically provide better color rendition than CCFL and electro-luminescent panels.

[0003] One type of LED light emitting panel is the edge-lit panel. In an edge-lit panel, a plurality of LEDs are positioned adjacent one or more of the edges of a light guide panel. Light from the LEDs enters the edges of the light guide panel and is re-directed within the light guide panel so that the light emerges from the front face of the light guide panel. A reflector may be provided on the back surface of the panel to reflect light toward the front surface of the panel that would otherwise exit from the back surface of the panel.

[0004] Unfortunately, edge-lit light emitting panels are not without their drawbacks. For example, the placement of the LEDs along the edges of an edge-lit panel limits the ability to dissipate heat produced by the LEDs. The edge-lit configuration also limits the maximum size of the panel, in that the number of LEDs that may be used to illuminate the panel increases linearly with the edge length, but the area that must be illuminated increases as the square of the edge length. Consequently, edge-lit panels are typically limited to panels having small areas.

[0005] Another type of LED light emitting panel is a so-called back-lit panel in which a plurality of LEDs are arranged in a two-dimensional array adjacent the back surface of the panel. The panel diffuses (i.e., evens-out) the light from the LEDs so that the panel appears to provide more even illumination than would be possible with just the LEDs alone. While back-lit panels do not suffer from the brightness limitations of edge-lit designs, and they may be used with panels having larger areas, it has proven difficult to effectively diffuse the light from the individual LEDs so that the panel appears to be evenly illuminated.

[0006] For example, one way to improve the illumination uniformity of a back-lit LED panel is to place the LEDs closer together. Disadvantageously, however, this increases the cost of the panel as more LEDs must be used. The closer spacing of the LEDs can also create heat dissipation problems. Another way to improve the illumination uniformity is to cause the panel to provide increased light diffusion. However, increased light diffusion typically represents a decrease in efficiency, thereby reducing the brightness of the panel or requiring the use of more or brighter LEDs to compensate for the efficiency loss associated with the increased diffusion.

SUMMARY OF THE INVENTION

[0007] In one embodiment, a light emitting panel comprises a base panel having a plurality of light emitting elements mounted thereon. Each of the light emitting elements produces an illumination pattern having a region of substantially uniform intensity that extends over a radiation angle of at least about 60°. One or more light conditioners are positioned adjacent the base panel to receive and condition light produced by the light emitting elements.

[0008] Other embodiments are also disclosed.

BRIEF DESCRIPTION OF THE DRAWINGS

[0009] Illustrative and presently preferred exemplary embodiments of the invention are shown in the drawings in which:

[0010] **FIG. 1** is a side view in elevation of one embodiment of a light emitting panel;

[0011] **FIG. 2** is a plan view of a base panel having a plurality of light emitting elements mounted thereon;

[0012] **FIG. 3 a** sectional view in elevation of one embodiment of a light emitting diode producing an illumination pattern comprising a region of substantially uniform intensity;

[0013] **FIG. 4** is a graphical representation of the illumination pattern produced by the light emitting diode of **FIG. 3**; and

[0014] **FIG. 5** is a sectional view in elevation of another embodiment of a light emitting diode producing an illumination pattern comprising a region of substantially uniform intensity.

DETAILED DESCRIPTION

[0015] An exemplary light emitting panel **10** is shown in **FIGS. 1 and 2** and may comprise a base panel **12** having a plurality of light emitting elements **14** thereon. As will be described in greater detail below, each of the light emitting elements **14** produces an illumination pattern **46** that comprises a region **28** of substantially uniform intensity that extends over a large radiation angle (e.g., at least about 60°, and typically at least about 100°). See **FIG. 4**. One or more light conditioners **16**, **18** are positioned adjacent the base panel to receive and condition light produced by the various light emitting elements **14**. The light conditioners may comprise a diffuser **16** that is positioned adjacent the base panel **12** so that the diffuser **16** receives and diffuses light produced by the various light emitting elements **14** provided on the base panel **12**, and a brightness enhancer **18** that is positioned adjacent the diffuser **16**. The brightness enhancer **18** collects diffused light from the diffuser **16** and directs it out of a front surface **52** of the brightness enhancer **18** to maximize the on-axis brightness of the light emitting panel **10**. In one application, the light emitting panel **10** may be positioned adjacent a display device **20**, such as a liquid crystal display panel **22**, to form a backlit display system **24**.

[0016] Referring now to **FIGS. 3 and 4**, each light emitting element **14** may comprise a light emitting diode **26** that produces an illumination pattern **46** that includes a region **28** of substantially uniform intensity. The region **28** of substantially uniform intensity extends over a radiation angle of at least about 60° and typically over a radiation angle of at least about 100°. See **FIG. 4**. In the embodiment shown and described herein, the light emitting diode **26** may comprise a body or substrate **300** in which is formed a reflector cup **32**. A light emitting diode junction **34** (i.e., a die) is positioned within the reflector cup **32**. A lens **36** is then formed over the diode junction **34** and reflector cup **32** in the manner best seen in **FIG. 3**. The reflector cup, **32** and lens **36** collect and direct light emitted by the diode junction **34** so that the light emitting diode **26** produces an illumination pattern **46** that comprises the region **28** of substantially uniform intensity, as illustrated in **FIG. 4**. The region **28** of substantially uniform intensity may also be referred to herein as a "flat topped radiation pattern," to distinguish it from a Lambertian radiation pattern, in which the intensity is proportional to the cosine of the emission angle relative to the normal. Lambertian radiation patterns are typically associated with conventional LEDs that emit light over high radiation angles (i.e., greater than about 100°).

[0017] In operation, the light emitting panel **10** produces a substantially uniform light output over its entire area, making it highly suitable for backlighting applications. The substantially uniform light output of the light emitting panel **10** is achieved without the need for closely-spaced light emitting diodes and without the need to utilize high-diffusivity diffusers. In addition, the light emitting panel **10** is not size-limited and is capable of providing high illuminations over large areas, making it ideal for use with large area displays, such as large screen computer and television displays.

[0018] Having briefly described one embodiment of a light emitting panel **10**, various exemplary embodiments of the light emitting panel will now be described in detail. However, before proceeding with the description it should be noted that the light emitting panels disclosed herein may be utilized in any of a wide range of applications (e.g., as backlights for display devices) and to produce light having any of a wide range of spectral outputs (e.g., white light or colored light), as would become readily apparent to persons having ordinary skill in the art after having become familiar with the teachings provided herein.

[0019] Referring back now to **FIG. 1**, one embodiment of a light emitting panel **10** may comprise a base panel **12** suitable for receiving the various light emitting elements **14** in the manner described herein. The base panel **12** may comprise a generally rectangular shaped, plate-like member having a length **38** and a width **40** that are commensurate with the intended size of the panel **10**. The base panel **12** provides a convenient mounting location for the various light emitting elements **14**, allowing them to be arranged in a two dimensional array or pattern over both the length **38** and width **40** of the base panel **12**. Because each of the light emitting elements needs to be electrically connected to a source of electrical power, it will be convenient in most applications for the base panel **12** to comprise a printed circuit board, although this is not required. In an embodiment wherein the base panel **12** comprises a printed circuit board, the light emitting elements **14** may be electrically connected (e.g., by soldering) to pads (not shown) provided on the base panel **12**. The pads of the base panel **12** may then be connected to drive circuitry (not shown) suitable for providing the required electric current to the light emitting elements **14**.

[0020] The various light emitting elements **14** may be mounted to the base panel **12** in any of a wide variety of configurations. In the embodiment shown and described herein, the light emitting elements **14** are arranged so that they define a plurality of rows **42** and columns **44**. Alternatively, other configurations are possible.

[0021] A reflective surface **50** may be provided on the base panel **12** to "recycle" (i.e., reflect) light which may be reflected by the back surface **60** of diffuser **16** (i.e., light incident on the back surface **60** of the diffuser **16** at an angle that exceeds the critical angle for the particular diffuser **16**). The reflective surface **50** may comprise a specular reflective surface (e.g., aluminum), or a diffuse reflective surface (e.g., white paint). The reflective surface **50** may comprise a separate component (e.g., a sheet-like material) that is affixed to the base panel **12**. Alternatively, the reflective surface **50** may be deposited directly on the base panel **12** by any of a wide range of processes suitable for depositing the particular type of reflective material that is to be used.

[0022] The diffuser **16** is positioned in spaced-apart relation to the base panel **12** so that it receives and diffuses light produced by the light emitting elements **14** as well as light that my be reflected by the reflective surface **50** provided on base panel **12**. In the embodiment shown and described herein, the diffuser **16** comprises a plastic diffuser film formed from a polycarbonate (e.g., Lexan®)) plastic material, such as a plastic diffuser film available from GE Advanced Materials and sold under the trade mark "Illuminex". Alternately, other types of diffuser films made from other types of materials (e.g., polyethylene terephthalate (PET)) could also be used.

[0023] The diffuser **16** may be mounted in front of the base panel **12** and separated therefrom by a spaced-distance **48**. Generally speaking, larger spaced-distances **48** will improve the uniformity of the light produced by the panel, but at the expense of panel thickness and some loss of efficiency. By way of example, in one embodiment, the diffuser **16** is separated from the base panel **12** by a distance **48** of about 50 millimeters (mm) or less.

[0024] The brightness enhancer **18** is positioned adjacent the diffuser **16** and receives diffused light therefrom. The brightness enhancer **18** comprises a plurality of optical elements, such as prisms **55** defined by the front surface **52** of the brightness enhancer **18**, that collect light from the diffuser **16** and direct it out the front surface **52** of the brightness enhancer **18**. The brightness enhancer **18** thereby maximizes the on-axis brightness of the panel **10**. By way of example, in the embodiment shown and described herein, the brightness enhancer **18** comprises a brightness enhance film (BEF) available from 3M and sold under the registered trademark Vikuiti®. Alternatively, other types of brightness enhancers could be used.

[0025] The brightness enhancer **18** may be mounted in front of the diffuser **16** and may be separated therefrom by a spaced-distance **54**. However, the brightness enhancer **18** is preferably stacked directly on (or applied to) the diffuser **16**, thereby minimizing or eliminating the distance **54**.

[0026] Referring now to **FIGS. 3 and 4**, each light emitting element **14** may comprise a light emitting diode **26** that produces an illumination pattern **46** having a region **28** of substantially uniform intensity that extends over a large radiation angle of at least about 60° and more preferably over an angle of at least about 100°. See **FIG. 4**. In one embodiment, the light emitting diode **26** may comprise a base portion or substrate **30** in which is formed a reflector cup **32**. The light emitting diode junction **34** or die is then positioned within the reflector cup **32**.

[0027] The base portion or substrate **30** may be fabricated from various materials (e.g., plastics). The base portion **30** may also be provided with a suitable lead-frame or other electrically conductive structure for electrically connecting the light emitting diode junction **34** to pads or terminals **56** provided on the base portion **30**.

[0028] The reflector cup **32** may be formed in the base portion **30** during fabrication thereof. Alternatively, the reflector cup **32** may be mechanically formed after fabrication of the base portion **30**, such as, for example, by drilling. It is generally preferred that the reflector cup **32** be provided with a reflective coating **58** thereon to improve efficiency. By way of example, in one embodiment, the reflector cup **32** is initially plated with copper, then with a subsequent layer of gold or silver to maximize reflectivity.

[0029] A lens **36** is then formed over the diode junction **34** and reflector cup **32** in the manner best seen in **FIG. 3**. The lens **36** may comprise any of a wide range of transparent plastic materials and may be formed in accordance with any of a wide range of processes known in the art for providing lenses to LED packages. However, what is not conventional about the lens **36** is its shape. More specifically, the lens **36** and reflector cup **32** work together to re-direct light produced by the light emitting junction **34** so that the LED produces an illumination pattern **46** comprising the region **28** of substantially uniform intensity, as best seen in **FIG. 4**.

[0030] With reference now primarily to **FIG. 4**, the illumination pattern **46** may be characterized as a flat topped radiation pattern in that the region **28** of substantially uniform intensity extends over a wide radiation angle of at least about 60° and typically at least about 100°, before the illumination intensity drops below about 50% of the maximum illumination intensity produced by the light emitting element **14**. Stated another way, the region **28** of substantially uniform intensity includes a minimum intensity value and a maximum intensity value, the minimum intensity value not being less than about 50% of the maximum intensity value. The flat-topped radiation pattern is achieved by the combination of the reflector cup **32** and the lens **36**.

[0031] A suitable design configuration for the reflector cup **32** and lens **36** may be developed by using any of a number of ray-tracing computer programs (e.g., ASAP Pro, available from Breault Research Organization, Inc., of Tucson, Ariz. 85715 (USA)) to model a proposed design. By way of example, in one embodiment, a generally conically-shaped reflector cup **32** and a lens **36** having a generally flat light output surface **62** (**FIG. 3**) will produce an illumination pattern **46** in which the region **28** of substantially uniform intensity extends over a radiation angle of at least about 100°. In another embodiment, illustrated in **FIG. 5**, the lens **136** may comprise a light output surface **162** having a convex portion **164** and a concave portion **166**. Generally speaking, it will be preferred, but not required, to base the shape of the light output surface (e.g., **62** or **162**) of the lens (e.g., **36** or **136**) on a 3rd order polynomial curve for ease of fabrication, although this is not required.

[0032] It is noted that regardless of the particular arrangement of the light emitting elements **14** on the base panel **12**, the light emitting elements **14** should be spaced so as to maximize the uniformity of the light output of the panel **10**. For example, the uniformity of the light output of the panel **10** can be maximized by considering the illumination pattern **46** (**FIG. 4**) produced by the light emitting elements **14**, specifically the angle over which the illumination pattern **46** comprises the region **28** of substantially uniform intensity, as well as the distance **48** separating the base panel **12** and diffuser **16**. That is, each of the light emitting elements **14** should be positioned sufficiently close to one another so that the regions **28** of substantially uniform intensity converge or merge together at about the same distance from the light emitting elements **14** as the distance **48** separating the base panel **12** and the diffuser **16**. So spacing the various light emitting elements **14** will reduce the appearance of dark and light spots in the light emitting panel **10**. Accordingly, in one embodiment wherein the region **28** of substantially uniform intensity extends over a radiation angle of about 100°, and wherein the distance **48** between the base panel **12** and the diffuser **16** is about 50 mm or less, a uniform illumination may be achieved by arranging the individual light emitting elements **14** so that they are spaced apart form one another by a distance of about 10-20 mm.

[0033] The light emitting elements **14** may be selected to provide any of a wide range of spectral outputs that may be desired for the particular light emitting panel **10**. For example, several types of light emitting diodes have been developed that produce substantially white light. Therefore, a light emitting panel **10** that emits substantially white light may be produced in accordance with the teachings provided herein by utilizing white light emitting LEDs for the light emitting elements **14** (e.g., LEDs comprised of blue light emitters covered by phosphor coatings that convert their blue light to white light). Alternatively, white light-emitting panels may be produced by utilizing separate red, green, and blue LEDs for the light emitting elements **14**, or by utilizing LEDs of other colors. Adjustments in the spectral output of the light emitting panel **10** may be accomplished by varying the numbers and placements of certain of the colors of the light emitting elements, as well as by variably driving the various colors of light emitting elements to increase or decrease their relative brightness.

1. A light emitting panel, comprising:

a base panel;

a plurality of light emitting elements mounted to said base panel, each of said plurality of light emitting elements producing an illumination pattern having a region of substantially uniform intensity that extends over a radiation angle of at least about 60°; and

one or more light conditioners to receive and condition light produced by said plurality of light emitting elements.

2. The light emitting panel of claim 1, wherein each of said plurality of light emitting elements comprises a light emitting diode.

3. The light emitting panel of claim 2, wherein each region of substantially uniform light intensity extends over a radiation angle of at least about 100°.

4. The light emitting panel of claim 3, wherein each light emitting diode comprises:

a reflector cup;

a light emitting junction mounted within said reflector cup; and

a lens positioned over said reflector cup and said light emitting junction.

5. The light emitting panel of claim 4, wherein said lens comprises a substantially flat light output surface.

6. The light emitting panel of claim 4, wherein said lens comprises a light output surface comprising a convex portion and a concave portion.

7. The light emitting panel of claim 2, wherein the light emitting diodes emit two or more different wavelengths of light.

8. The light emitting panel of claim 1, wherein said base panel comprises a printed circuit board, said printed circuit board electrically connecting each of said light emitting elements to a supply of electric current.

9. The light emitting panel of claim 1, wherein each region of substantially uniform intensity comprises a minimum intensity and a maximum intensity, the minimum intensity not being less than about 50% of the maximum intensity.

10. The light emitting panel of claim 1, further comprising a reflective surface provided on said base panel.

11. The light emitting panel of claim 10, wherein said reflective surface comprises a specular reflective surface.

12. The light emitting panel of claim 10, wherein said reflective surface comprises a diffuse reflective surface.

13. The light emitting panel of claim 1, wherein the light conditioners comprise:

a diffuser positioned adjacent said base panel, said diffuser receiving and diffusing light produced by said plurality of light emitting elements; and

a brightness enhancer positioned adjacent said diffuser to collect diffused light from said diffuser and direct light out of a front surface of the brightness enhancer.

14. The light emitting panel of claim 13, wherein said diffuser comprises a polycarbonate plastic.

15. The light emitting panel of claim 13, wherein said brightness enhancer comprises a sheet-like material defining a plurality of prisms.

16. A display system, comprising:

a base panel;

a plurality of light emitting elements mounted to said base panel, each of said plurality of light emitting elements producing an illumination patter comprising a region of substantially uniform intensity that extends over a radiation angle of at least about 100°;

one or more light conditioners to receive and condition light produced by said plurality of light emitting elements; and

a display device positioned adjacent said light conditioners.

17. The display system of claim 16, wherein the light conditioners comprise:

a diffuser positioned adjacent said base panel, said diffuser receiving and diffusing light produced by said plurality of light emitting elements; and

a brightness enhancer positioned adjacent said diffuser, said brightness enhancer receiving diffused light from said diffuser.

18. The display system of claim 17, wherein said display device comprises a liquid crystal display panel.

19. A light emitting panel, comprising:

a base panel having a reflective surface provided thereon;

a plurality of light emitting elements mounted to said base panel, each of said plurality of light emitting elements producing an illumination patter that comprises a region of substantially uniform intensity that extends over a radiation angle of at least about 100°;

diffuser means positioned adjacent said base panel for diffusing light produced by said plurality of light emitting elements; and

brightness enhancing means positioned adjacent said diffuser means for enhancing the brightness of diffused light from said diffuser means.

20. The light emitting panel of claim 19, wherein each of said plurality of light emitting elements comprises a light emitting diode.

* * * * *