UNITED STATES PATENT AND TRADEMARK OFFICE

BEFORE THE PATENT TRIAL AND APPEAL BOARD

Hisense USA Corporation

Petitioner

v.

Brightplus Ventures LLC

Patent Owner

Case IPR2023-01410

U.S. Patent No. 8,294,075

PATENT OWNER'S PRELIMINARY RESPONSE

TABLE OF CONTENTS

I. INTRODUCTION 1

II. THE '075 PATENT DISCLOSES AN IMPROVED LIGHTING SOURCE FOR GENERAL ILLUMINATION.. 2

III. EXPERT TESTIMONY, LEVEL OF SKILL IN THE ART, AND CLAIM CONSTRUCTION 3

A. DECLARATION EVIDENCE 3

B. PERSON OF ORDINARY SKILL IN THE ART.....4

C. PETITIONER OMITS ITS OWN PROPOSED CLAIM CONSTRUCTION FROM THE DISTRICT COURT 4

D. "ON" 4

IV. PRIOR ART CITED BY PETITIONER. 6

A. MOK 6

B. EPSTEIN 8

C. HOLMAN.....8

D. LAMB 8

V. GROUND 1 - PETITIONER'S MOK, HOLMAN AND LAMB COMBINATION FAILS TO RENDER OBVIOUS INDEPENDENT CLAIM 1. 9

A. MOK FAILS TO DISCLOSE [CLAIM 1D] "A BRIGHTNESS ENHANCEMENT FILM ON THE REFLECTOR."....10

B. THE COMBINATION OF MOK AND LAMB FAILS TO DISCLOSE [CLAIM 1F] A "BRIGHTNESS ENHANCEMENT FILM [THAT] IS CONFIGURED TO PREFERENTIALLY EMIT LIGHT HAVING A FIRST ORIENTATION FROM THE LIGHTING PANEL AND TO PREFERENTIALLY REFLECT LIGHT HAVING A SECOND ORIENTATIN, DIFFERENT FROM THE FIRST ORIENTATION, BACK INTO THE LIGHTING PANEL. 12

C. A POSITA WOULD NOT BE MOTIVATED TO COMBINE LAMB WITH MOK AND/OR HOLMAN.....14

D. THE COMBINATION OF MOK, HOLMAN, AND LAMB ALSO DOES NOT DISCLOSE "A HEATSINK PANEL ON A SECOND SIDE OF THE AT LEAST ONE SUBSTRATE" OF CLAIM 6. 17

E. MOK FAILS TO DISCLOSE [CLAIM 7] A "DIFFUSER SHEET IS IN DIRECT CONTACT WITH THE REFLECTOR SHEET…" 18

F. THE COMBINATION OF MOK, HOLMAN, AND LAMB ALSO DOES NOT DISCLOSE "LIMIT[ING] DIRECT EMISSIONS FROM THE LIGHTING PANEL…TO THEREBY ENCOURAGE LIGHT RECYCLING/DIFFUSION IN THE LIGHTING PANEL" OF CLAIM 10. 19

G. DEPENDENT CLAIMS 2-7 AND 9-12 ARE ALSO NOT RENDERED OBVIOUS BECAUSE INDEPENDENT CLAIM 1 IS NOT OBVIOUS 20

VI. GROUND 2 - PETITIONER'S EPSTEIN, HOLMAN AND LAMB COMBINATION FAILS TO RENDER OBVIOUS INDEPENDENT CLAIM 1. 20

A. A POSITA WOULD NOT BE MOTIVATED TO COMBINE LAMB WITH EPSTEIN AND HOLMAN. 21

B. EPSTEIN FAILS TO DISCLOSE CLAIM ELEMENT 1D, "A BRIGHTNESS ENHANCEMENT FILM *ON* THE REFLECTOR." 21

C. EPSTEIN FAILS TO DISCLOSE CLAIM ELEMENT 1F, "THE BRIGHTNESS ENHANCEMENT FILM IS CONFIGURED TO …PREFERENTIALLY REFLECT LIGHT HAVING A SECOND ORIENTATION, DIFFERENT FROM THE FIRST ORIENTATION, *BACK INTO THE LIGHTING PANEL*." 22

D. EPSTEIN DOES NOT DISCLOSE A "DIFFUSER SHEET…IN DIRECT CONTACT WITH THE REFLECTOR SHEET." OF CLAIM 7 23

E. EPSTEIN FAILS TO DISCLOSE "THE LIGHT EXTRACTION FEATURES ARE RANDOM FEATURES" OF CLAIM 9. 25

F. EPSTEIN FAILS TO DISCLOSE THAT THE BEF IS "CONFIGURED TO LIMIT DIRECT EMISSION…TO THEREBY ENCOURAGE LIGHT RECYCLING/DIFFUSION IN THE LIGHTING PANEL" OF CLAIM 10 25

G. DEPENDENT CLAIMS 2-7 AND 9-12 ARE ALSO NOT RENDERED OBVIOUS BECAUSE INDEPENDENT CLAIM 1 IS NOT OBVIOUS 27

VII. CONCLUSION.....27

Exhibit List

Exhibit	Description
2001	Declaration of William K. Bohannon ("Bohannon Decl.")
2002	Curriculum vitae of William K. Bohannon
2001	Joint Claim Construction Statement
2004	Brightplus Ventures LLC's Opening Claim Construction Brief
2005	Hisense' Opening Claim Construction Brief

* * * *

USE OF EMPHASIS IN QUOTATIONS

All emphases in quotations and exhibit citations have been added, unless otherwise indicated.

APPLICABLE STATUTES

References to 35 U.S.C. §§ 102 and 103 are to the AIA versions applicable to the '075 Patent.

I. INTRODUCTION

Brightplus Ventures LLC ("Patent Owner" or "Brightplus") submits this preliminary response showing that each of the 2 grounds set forth by Hisense USA Corporation ("Petitioner" or "Hisense") fails to render obvious challenged claims 1-7 and 9-12 of U.S. Patent No. 8,294,075 ("the '075 Patent")

As to Ground 1, a POSITA would not be motivated to view the references of Mok and Holman with Lamb as Lamb is directed towards an incompatible edge lighting system in a different field. Furthermore, as discussed in detail below, even if the references were reasonably viewed together, a number of elements are not disclosed by the combination nor is there a motivation to combine certain elements.

As to Ground 2, a POSITA would not be motivated to view the references of Epstein and Holman with Lamb for the same reasons as Ground 1, in that Lamb discloses an incompatible edge lighting system in a different field. Furthermore, as discussed in detail below, even if the references were reasonably viewed together, a number of elements are not disclosed by the combination nor is there a motivation to combine certain elements.

Accordingly, Patent Owner respectfully requests that the Board deny the petition for *inter partes* review of claims 1-7 and 9-12 of the '075 Patent on the merits.

II. THE '075 PATENT DISCLOSES AN IMPROVED LIGHTING SOURCE FOR GENERAL ILLUMINATION..

The '075 Patent was filed on August 5, 2010, and claims priority to U.S. Patent Application No. 11/408,648 filed on April 21, 2006, which issued as U.S. Patent No. 7,777,166.

The '075 Patent is directed to solid state lighting systems, and more particularly to adjusting the light output of solid state lighting (e.g., backlighting). Ex, 1001 - '075 Patent, 1:14-16. Generally, the field relates to employing solid state lighting devices (e.g., LEDs) to illuminate a liquid crystal display (LCD) panel. *Id.* 1:24-36. This may be accomplished through the employment of several structures and layers incident upon the surface on which the LEDs are mounted as well as between the LEDs and the LCD panel. Ex. 2001, ¶ 25. These structures may include reflective surfaces, polarizers of varying type and function, diffusers, lenses, brightness enhancement layers and others. *Id.* The purpose and alignment of these structures is intended to maximize the amount of light that is directed through the LCD panel at an angle and intensity that is appropriate for viewing the images displayed on the LCD panel. *Id.*

Specifically, the '075 patent describes the use of LEDs to illuminate an LCD panel by orienting the LEDs on a substrate to face in the direction normal to the plane of the LCD panel. '075 Patent, 3:40-47. The light emitted by the LEDs passes through a diffuser and into a specific type of brightness enhancement film (BEF).

Ex. 2001, ¶ 26. The BEF of the '075 patent is designed to allow light having a first orientation (i.e., entering at an incident angle below a certain threshold) to pass through the BEF and reflecting light having a second orientation (i.e., entering at an incident angle outside of a certain threshold) back towards the LED substrate. '075 Patent, Claim 1; *see also* Ex. 2001, ¶ 26. The LED substrate includes a reflector constituting a sheet or covering thereon. The reflector reflects light back into the diffuser and the BEF in a process referred to as "recycling." '075 Patent, 3:48-55. The purpose of recycling light is to ensure that the light reaching the BEF is of the first orientation so that as the light passes through the LCD panel it is of an appropriate angle and intensity for adequately illuminating the panel for a viewer. Ex. 2001, ¶ 26.

The term brightness enhancement film ("BEF") is not a standardized term understood the same way by everyone but is merely a way of referring to a class of films with different characteristics. Ex. 2001, ¶ 26.

III. EXPERT TESTIMONY, LEVEL OF SKILL IN THE ART, AND CLAIM CONSTRUCTION

A. Declaration Evidence

This Preliminary Response is supported by the declaration of William K. Bohannon, an expert with long-standing experience in the industry. Ex. 2001. Mr. Bohannon has (30) years of commercial industrial electronics experience including experience in the areas of LCD, Plasma, CRT and Large Screen Display Equipment:

LCD manufacturing, substrates, drivers, and other related components for rear screen displays including avionics and cockpit displays Ex. 2001, ¶¶ 7-11.

B. Person of Ordinary Skill in the Art

On or before April 21, 2006, a POSITA relating to the technology of the '075 Patent would have (a) a Bachelor's of Science degree in a technical field and at least four years of experience in the field of design and/or manufacture of display systems; (b) a Master's of Science degree in a technical field and at least two years of experience in the field of design and/or manufacture of display systems; or (c) a PhD in a technical field relating to the design and/or manufacture of display systems. Additional graduate education could substitute for professional experience, or significant experience in the field could substitute for formal education. Ex. 2001, ¶¶ 27-30.

C. Petitioner Omits its Own Proposed Claim Construction from the District Court

Although Petitioner asserts that no terms in the '075 Patent need construction, it has proposed a construction for a term in the '075 Patent in the parallel litigation. Ex. 2003 at 4. This term is discussed below.

D. "on"

Brightplus's Proposed Construction 1:22-cv-02774	Hisense's Construction 1:22-cv-02774
directly on, or on with intervening elements present"	directly on the other element or intervening elements may be present

The parties seem to agree that the specification of the '075 Patent provides the definition of the term "on": Ex. 2003 at 9

> It will be understood that when an element such as a layer, region or substrate is referred to as being "on" or extending "onto" another element, it can be directly on or extend directly onto the other element or intervening elements may also be present.

'075 Pat., col. 6:47-51. The disagreement between the parties appears to be of form, rather than substance.

Brightplus's construction is consistent with the claim language. Ex. 2003 at 9. Hisense' proposed construction results in inconsistent and confusing verbiage. Consider for example the following limitation from claim 1 of the '075 Patent:

> "a reflector sheet on the first side of the at least one substrate"

Substituting Hisense's proposed construction results in the following:

> "a reflector sheet directly on the other element or intervening elements may be present the first side of the at least one substrate.

This substitution demonstrates the problem with Hisense's formulation. First, when Hisense's proposed construction is substituted into the claim, the claim no longer makes sense. Second, the phrase "the other element" does not have an antecedent basis, leaving the jury guessing whether "a reflector sheet" should be on some unknown "other element" or on . . . "the first side of the at least one substrate." Third, "or intervening elements may be present" is not tied to the word "on" in the construction, making it imprecise as to whether intervening elements may be

present, but removed from the two elements, one being on the other one— in this case "a reflector sheet" and "the first side of the at least one substrate."

Brightplus's proposed construction, on the other hand, does not suffer from these deficiencies. Carrying out the substitution of Brightplus's proposed construction into the same claim element results in the following:

> a reflector sheet <u>directly on, or on with intervening elements present</u> the first side of the at least one substrate

The substitution results in a grammatically sound phrase. Moreover, the substitution of Brightplus's construction does not result in any words lacking antecedent basis. Finally, Brightplus's construction still makes clear that "a reflector sheet" is on "the first side of the at least one substrate," (directly or with intervening elements present)

Based on the proper construction of "on," (which is partially agreed to both Parties) there cannot be an airgap as this is consistent with the purpose of the invention which avoids light loss or light leakage. Ex. 2001, ¶ 36.

IV. PRIOR ART CITED BY PETITIONER.

A. Mok

U.S. Patent Publication No. 2006/0227545 ("Mok") was filed on April 11, 2005 and Petitioner relies on Mok as the primary reference for Ground 1.

Mok describes light emitting panel with a base panel having a plurality of light emitting elements mounted thereon. Specifically, Mok describes using a diffuser to

accomplish light recycling. Ex. 1005 ("Mok"), [0021]. "A reflective surface 50 may be provided on the base panel 12 to 'recycle' (i.e., reflect) light which may be reflected by the back surface 60 of the diffuser 16 (i.e., light incident on back surface 60 of the diffuser 16 at an angle that exceeds the critical angle for the particular diffuser 16)." *Id.* The light emitting panel of Mok includes base panel 12, diffuser 16 and brightness enhancer 18 spaced apart by distances 48 and 54 respectively. These elements are arranged in linear stacks.

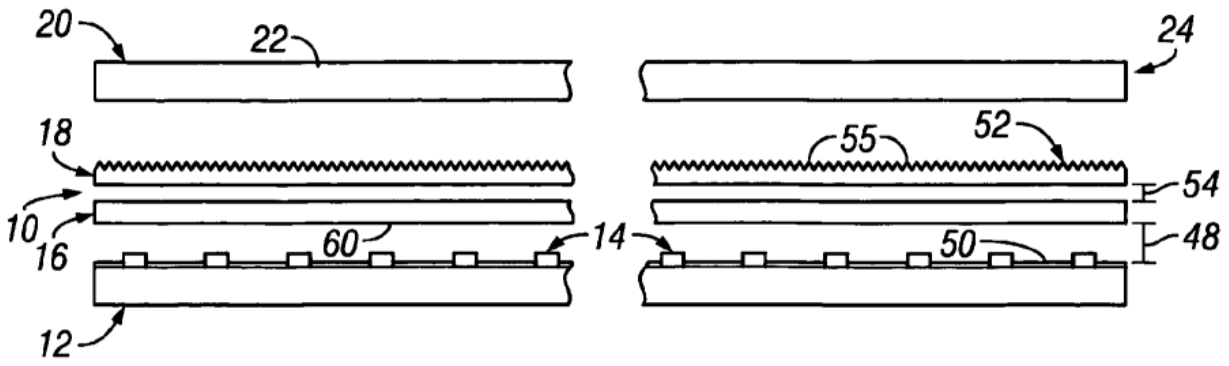

FIG. 1

As disclosed in Mok, the diffuser 16, is spaced at distance 48 from reflective surface 50. *Id.*, [0032]

As discussed in detail below, Mok fails to disclose a "brightness enhancement film" as claimed. Even assuming arguendo that the diffuser can be considered a "brightness enhancement film," Mok does not disclose that the "brightness enhancement film" is "**on** the reflector" as claimed.

B. Epstein

Petitioner's primary reference for Ground 2 is U.S. Patent Publication No. 2005/0265029 (Ex. 1008 - "Epstein") filed on June 1, 2004. Petitioner further relies on Epstein as one of two secondary references for Ground 3. Epstein describes an array of LEDs on a substrate over which an intermediate layer and a guiding layer are arranged. Epstein, [0005] The LEDs of Epstein function to emit light upwards. *Id.*

C. Holman

Petitioner relies on WO 03/056876 (Ex. 1006 - "Holman") as one of two secondary references for both Grounds 1 and 2. Holman was filed December 13, 2002, and claims priority to a US filing dated December 14, 2001. Holman describes a multi-layered LED light source array that employs reflectors, elevated prismatic films, and polarization converting films to collimate light for optimal illumination of and LCD panel.

D. Lamb

Petitioner relies on U.S. Patent Publication No. 2005/0135115 (Ex. 1007 - "Lamb") as one of two secondary references for both Grounds 1 and 2. Lamb was filed December 23, 2003.

Lamb is directed to a side lighting or edge lighting system using cold cathode fluorescent lamps (CCFLs). Lamb, [0034] Specifically, Lamb teaches a back

lighting system 100 which includes a double pair of CCFL light sources 165a and 165b placed at the opposing edges 132a and 132b of the first lightguide 130. Lamb, [0036] Furthermore, a second, double pair of light sources 185a and 185b are placed at the opposing edges 142a and 142b of the second lightguide 140. Lamb, [0037]

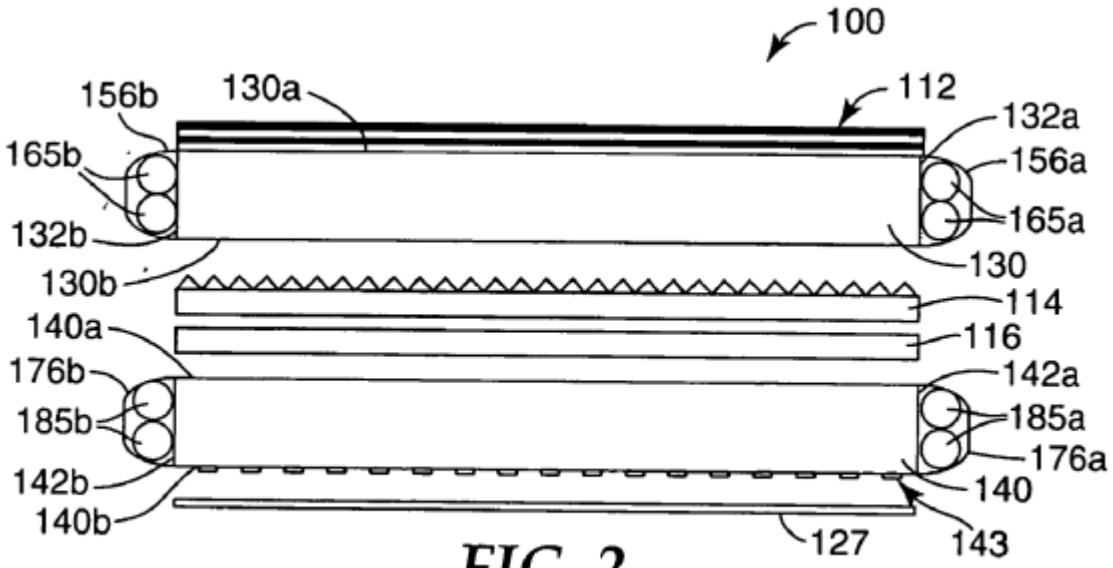

FIG. 2

As disclosed in Lamb, the cold cathode fluorescent lamp light sources 165a and 165b include "lamp cavity reflectors 156a, 156b" and the cold cathode fluorescent lamp light sources 185a, 185b include "lamp cavity reflectors 176a, 176b." Lamb, [0036-0037]

V. GROUND 1 - PETITIONER'S MOK, HOLMAN AND LAMB COMBINATION FAILS TO RENDER OBVIOUS INDEPENDENT CLAIM 1.

Petitioner relies on Mok as its primary reference for Gound 1. But Petitioner fails to demonstrate that a POSITA would be motivated to even view Lamb with

Mok and/or Holman let along combine teachings of Lamb with Mok and/or Holman. Furthermore, even assuming arguendo that the references were combined, the combination of Mok, Holman and Lamb fail to teach or render obvious claim 1. Ex. 2001, ¶¶ 44-52.

A. Mok Fails to Disclose [Claim 1D] "a brightness enhancement film on the reflector."

Claim 1 recites:[1]

> [*Preamble*] A lighting panel, comprising:
> [*1A*] at least one substrate having a first side parallel to a principal plane of the lighting panel;
> [*1B*] a plurality of solid state lighting devices arranged on the first side of the at least one substrate and configured to emit light;
> [*1C*] a reflector sheet on the first side of the at least one substrate;
> [*1D*] a brightness enhancement film on the reflector sheet, [*1E*] wherein the reflector sheet is arranged between the at least one substrate and the brightness enhancement film and [*1F*] the brightness enhancement film is configured to preferentially emit light having a first orientation from the lighting panel and to preferentially reflect light having a second orientation, different from the first orientation, back into the lighting panel; and
> [*1G*] a diffuser sheet between the reflector sheet and the brightness enhancement film, wherein the reflector sheet, the diffuser sheet and brightness enhancement film extend and are arranged parallel to the principal plane of the lighting panel.

'075 Patent, Claim 1.

Mok discloses a diffuser spaced at a distance from the reflective surface and specifically teaches an "air gap." Ex. 2001, ¶45. However, the term "on" requires

[1] The elements in Claim 1 are numbered to match Petitioner's numbering.

that the BEF be "directly on" the reflector or with intervening elements present. The air gap in Mok does not disclose this element. *Id.* An air gap makes for a larger, thicker structure with the potential for undesirable light leakage and lower efficiency. *Id.* Although Mok discloses that the brightness enhancer 18 may be stacked directly on the diffuser 16, there is no disclosure that the brightness enhancer 18 and diffuser 16 are directly on the reflector sheet. In fact, the only disclosures contradict that argument. Mok, Fig. 1

Petitioner concedes that the air gap in Mok is not an intervening layer. Petition, at 17-18. In a fallback, Petitioner then relies on Prism sheets 58 and 60 of Holman to disclose this element. Ex. 2001, ¶46. However, the prism sheets 58 and 60 are not BEFs as used in the '075 Patent. *Id.* For example, Holman differentiates between prisms sheets and BEFs:

> "One unique aspect of elevated prism sheets 58 and 60 as used in all previous illumination examples, is that they do not have to exhibit the extreme standards in cosmetic perfection that have associated with 3M's BEF in direct view brightness enhancement applications […] Preventative measures include discarding all damaged BEF sheets. No such costly measures are needed with present prism sheets 58 and 60. Cosmetic defects in prism sheets 58 and 60 cannot be directly viewed."

Holman at 121, section 8.2.1

Recognizing the fallacy of this argument, Petitioner then claims that "Holman discloses a BEF 131 that rests on a transparent dielectric material 144." Petition, at 19. Petitioner then claims it would've been obvious to modify Mok's layer

arrangement using Holman's teachings because ***there is a general pressure in the art to reduce the thickness of panels***. Petition, at 20 (emphasis added) However, Mok specifically teaches away from this reasoning as Mok states "Generally speaking, ***larger spaced-distances 48 will improve the uniformity of the light produced by the panel, but at the expense of panel thickness and some loss of efficiency***. By way of example, in one embodiment, the diffuser 16 is separated from the base panel 12 by a distance 48 of about 50 millimeters (mm) or less." Mok, [0023](emphasis added) Ex. 2001, ¶47

In summary, neither Mok nor Holman discloses Claim element 1D, nor would a POSITA find it suitable to modify Mok to incorporate the prism sheet structure of Holman to arrive at this element.

B. The Combination of Mok and Lamb fails to disclose [Claim 1F] a "brightness enhancement film [that] is configured to preferentially emit light having a first orientation from the lighting panel and to preferentially reflect light having a second orientation, different from the first orientation, back into the lighting panel.

Petitioner states that "Mok discloses that the BEF preferentially emits light having a first orientation and preferentially reflects light having a second orientation." Petition at 22. However, Petitioner does not substantiate this claim. Petitioner states that Mok employs "light conditioners" to "diffuse light to create uniform lighting within the panel and on the other hand to use a 'brightness enhancer' to collect diffused light and direct it out of a front surface to 'maximize the on-axis brightness

of the light emitting panel.'" *Id*. However, this disclosure in Mok is merely redirecting light i.e., changing the direction of the light so that the emitted light is on axis and directed perpendicular to the plane of the display. Ex. 2001, ¶ 48**.** This does not disclose the recycling action of the brightness enhancement film as described in the '075 patent and claimed here.

Rather than using the BEF, Mok uses using the diffuser for light recycling:

> "A reflective surface 50 may be provided on the base panel 12 to 'recycle' (i.e., reflect) light which may be reflected by the back surface 60 of the diffuser 16 (i.e., light incident on back surface 60 of the diffuser 16 at an angle that exceeds the critical angle for the particular diffuser 16)."

Mok, [0021]

Petitioner argues that a POSITA would know that a BEF would also accomplish the same light recycling, but Mok includes a BEF and the disclosure makes no reference to the BEF being capable of performing light recycling.

A POSITA understands that there is no standard brightness enhancement film. Ex. 2001, ¶49. For example, Mok explicitly states "the brightness enhancer 18 comprises a brightness enhance film (BEF) available from 3M and sold under the registered trademark Vikuiti®. Mok, [0024]. However, the 3M product is not a brightness enhancement film because it does not recycle light as required of a "brightness enhancement film" as claimed in the '075 Patent. Ex. 2001, ¶ 48. The "brightness enhancement film" as taught in the '075 Patent has 2 angles, one that

emits (e.g., passes) light and one that reflects light to be recycled. *Id.* This is explicitly recited in Claim 1. Mok does not disclose or teach light recycling. *Id.* Petitioner attempts to substantiate its argument that achieving light recycling using the BEF would have been obvious by the priority date of the '075 patent by referencing Lamb, but this fails as well. Petition at 22.

C. A POSITA Would Not Be Motivated to Combine Lamb with Mok and/or Holman.

A POSITA viewing the direct backlighting fields of Lamb and Mok would not review or consider the Holman reference at all as a POSITA would immediately recognize Holman is directed to a dissimilar field. Ex. 2001, ¶ 50.

Mok and Holman are directed to solving problems using a compact and efficient backlight. Tellingly, while Petitioner includes figures from Mok and Holman in the petition, it intentionally excludes figures from Lamb. This is because the figures would immediately demonstrate why a POSITA would not be motivated to combine Lamb, as it discloses a system for illuminating a display that would now be commonly known as "edge lighting." Ex. 2001, ¶50. Edge lighting uses light sources arranged around the edge of a light guide behind and emitting perpendicular to the surface of a display. *Id.* The light from the light sources propagates through the light guide after making a 90 degree turn before interacting with the diffuser layer and BEF. *Id.* Thus, far less light is incident on the BEF at an angle that would

allow for emission until it has been turned around again and again and then recycled repeatedly to allow for correction. *Id.*

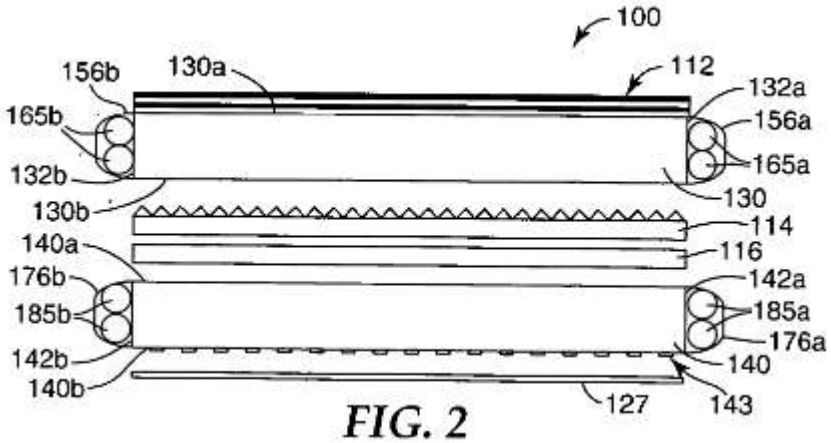

FIG. 2

As shown above in Fig. 2[2], as with all figures of Lamb, Lamb employs, in order, a first set of CFFL light sources coupled to a light guide 140, a diffuser sheet 116, a BEF 114, a second set of light sources coupled to a second light guide 130, and a recycling enhancement structure 112 disposed at the surface 130a which comprises a reflective polarizer. Ex. 2001, ¶ 51. Lamb attempts accomplish with edge lighting, light guides, ***and*** two layers of light recycling features what the '075 Patent accomplishes with a far simpler arrangement. *Id.* The system described in the '075 patent employs the BEF "preferentially emit[s] light having a first orientation from the lighting panel and preferentially reflect[s] light having a second orientation…back into the lighting panel." '075 Patent, 3:26-30. This is distinct

[2] Also, in Fig. 2 – the circles used for the edge lighting on the edges are cold cathode fluorescent lamps or CCFL tubes and not a compact LED system.

from the combination of Mok and Lamb which would require multiple structures to accomplish the preferential emission/reflection (e.g., reflective polarizer, diffuser, BEF). Ex. 2001, ¶ 51.

To further illustrate this incompatibility, the combined figure below shows Lamb's multi-stage lighting system combined with a back lighting system such as that of Mok. As shown below, the light guides in Lamb (130, 140) are designed for edge lighting and force the light through a 90 degree turn - from the lamp lit edge to the emitting surface. *Id.* at 52. The '075 Patent's invention requires no such light guide or turn. *Id.* If Mok's LED substrate is mounted on top of Lamb's light guide 140, it will block all of that section's light as shown below. *Id.* Because of the different fields and uses, a POSITA would not be motivated to even consider viewing Lamb when viewing Mok.

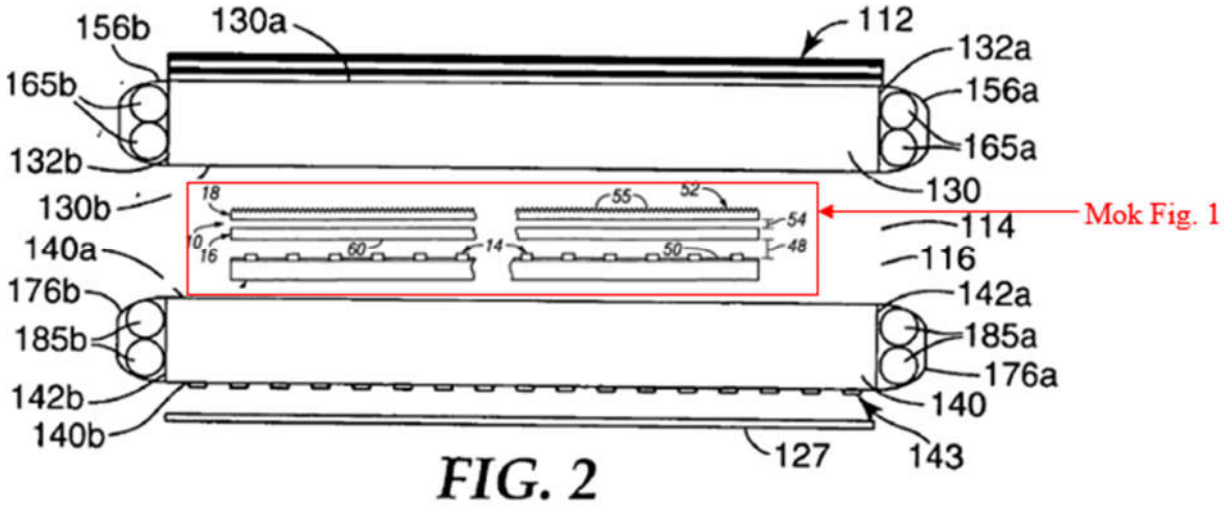

MOK FIG. 1 Combined with LAMB FIG. 2

D. The Combination of Mok, Holman, and Lamb Also Does Not Disclose "a heatsink panel on a second side of the at least one substrate" of Claim 6.

Petitioner first argues that the printed circuit board of Mok is a heatsink, but this is just plain incorrect. Ex. 2001, ¶53. A printed circuit board does not penetrate the substrate. It is not designed, intended or functional to draw heat away from the LEDs without substantially more than being simply a printed circuit board. *Id.*

As a fallback argument, Petitioner relies on Holman and contends that "Holman describes a base layer 220 that functions as part of a heat sink." Petition, at 29. However, the actual text of Holman states that "[n]ot only must the base layer material be thermally stable, it must be counted on to service as part of the collective heat sink." Holman, pg. 39, Sec. 4.1.4.1. Holman does not teach or suggest that the base layer is considered by itself a heatsink panel on a second side of the at least one substrate. Ex. 2001, ¶ 54. Instead, as shown in FIG. 13A in Holman below:

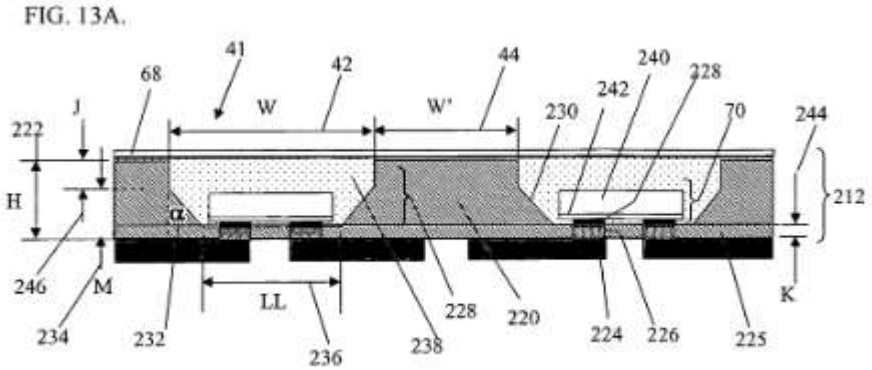

The base layer 220 is the intervening space between the two flip chip mounted LEDs. It is well known in the art that this component of an LED package would be

composed of an electrically insulating material. Ex. 2001, ¶ 55. Holman confirms this "The individual LEDs 70 are mounted flip-chip…on composite, electrically-insulating, reflective base layers 220 and 225..." Holman. pg. 37, Sec 4.1.4.1. Electrically insulating materials are generally not advantageous for heat sinking because they do not conduct heat any better than they conduct electricity. Ex. 2001, ¶ 55. Even granting Petitioner the most favorable interpretation of Holman, that the base layers 220 and 225 somehow function as heat sinks, the base layer of the LED package is not a heat sink within the meaning ascribed to it in the '075 patent. *Id.* The heatsink of the '075 patent is configured to draw heat away from the substrate in a direction opposite to a direction of light emission. *Id.* Petitioner has shown an LED package, which is mounted on the substrate of the lighting panel. *Id.* Petitioner has merely demonstrated that Holman discloses moving heat from the LEDs to the substrate, not away from the substrate or the sensitive display components which they light.

E. Mok fails to disclose [Claim 7] a "diffuser sheet is in direct contact with the reflector sheet…"

Petitioner incorrectly contends that "a POSITA would recognize that the distance between the reflective surface 50 in Mok and the diffuser 16 could be reduced so that the diffuser 16 directly contacts the reflective surface 50…A POSITA would be motivated to make this modification in order to create a thinner and more efficient display as Mok expressly teaches." Petition at 31. To attempt to support this claim,

Petitioner states "Mok further teaches that larger spaces between the diffuser and base panel are 'at the expense of panel thickness and some loss of efficiency.'" Petition at 30 *citing* Mok, [0023]

However, Petitioner's argument relies on mischaracterizing a selective quotation. The full quote from Mok actually recites: "[g]enerally speaking, *larger spaced-distances 48 will improve the uniformity of the light produced by the pane*l, but at the expense of panel thickness and some loss of efficiency." Mok, [0023] (emphasis added). In view of the full statement, Mok rather than teaching reducing the distance 48 between reflective surface 50 and diffuser 16 such that they are in contact, Mok recognizes that the spacing between the reflective surface and diffuser is a necessary and unavoidable part of the design described therein. Ex. 2001, ¶ 56. This is direct contrast to Petitioner's mischaracterization. A POSITA would understand that Mok does not contemplate the diffuser sheet being in contact with the reflector sheet. *Id.* Although Mok discloses that the brightness enhancer 18 may be stacked directly on the diffuser 16, there is no disclosure that the brightness enhancer 18 and diffuser 16 are directly on the reflector sheet. In fact, FIG. 1 is the only disclosure and the Figure contradicts the argument. Ex. 2001, ¶ 56. Mok, Fig. 1

F. The Combination of Mok, Holman, and Lamb Also Does Not Disclose "limit[ing] direct emissions from the lighting panel…to

thereby encourage light recycling/diffusion in the lighting panel" of Claim 10.

Petitioner relies on the combination of Mok and Lamb to allege that dependent claim 10 is met. However, this is not the case. To summarize previous arguments, Mok does not describe a BEF that preferentially emits light having a certain incident angle. Ex. 2001, ¶ 57. Rather it describes a BEF that "comprises a plurality of optical elements, such as prisms 55 defined by the front surface 52 of the brightness enhancer 18, that collect light from the diffuser 16 and direct it out the front surface 52 of the brightness enhancer 18. The brightness enhancer 18 thereby maximizes the on-axis brightness of the panel 10." Mok, [0024] This is merely describing re-orientation of the light to be more normal to the surface of the display, not recycling the light. Ex. 2001, ¶ 57.

G. Dependent Claims 2-7 and 9-12 are Also Not Rendered Obvious Because Independent Claim 1 is not Obvious

Just as the combination of Mok, Holman, and Lamb in view of a POSITA does not render independent claim 1 obvious, Petitioner cannot demonstrate that any of the dependent claims 2-7 and 9-12 are rendered obvious.

VI. GROUND 2 - PETITIONER'S EPSTEIN, HOLMAN AND LAMB COMBINATION FAILS TO RENDER OBVIOUS INDEPENDENT CLAIM 1.

Petitioner relies on Epstein as its primary reference for Ground 2. But Petitioner fails to demonstrate that a POSITA would be motivated to view Lamb with Epstein and Holman, combine unsuitable elements from the different

references, nor demonstrate that the combination of Epstein, Holman and Lamb teach or render obvious independent claim 1.

A. A POSITA Would Not be Motivated to Combine Lamb with Epstein and Holman.

Like Ground 1 above, Lamb relies on a clumsy, double stack of edge lit back-lights with CCFLs instead of rear mounted LEDs like those used in Epstein and Holman. Lamb's CCFL arrangement would not even be considered by a POSITA seeking to improve a LED based system. Ex. 2001, ¶ 59.

B. Epstein Fails to Disclose Claim Element 1D, "a brightness enhancement film *on* the reflector."

Petitioner states that "Epstein describes the use of BEFs 662 and 664, stating that 'one or more brightness enhancing films…may be used to direct the light more in a direction perpendicular to the substrate 608' [Epstein [0074]]…As pictured in figure 4a, the reflector 422 is on one side of the substrate (408), followed by a guiding layer 410…Epstein's BEF 662 is on the reflector 622 with intervening element 610 in between." Petition at 38-39. However, as shown below, Epstein's BEF is not "on" the reflector within the meaning of the '075 patent.

Epstein does not disclose a BEF directly on the reflector as described in the '075 Patent. Ex. 2001, ¶ 60. As shown in Epstein Fig. 11, there is an air gap between BEF 662 and guiding layer 610. The BEF is not directly on the intermediate layer 610 and the layers presented in Epstein are not stacked in direct contact. *Id.*

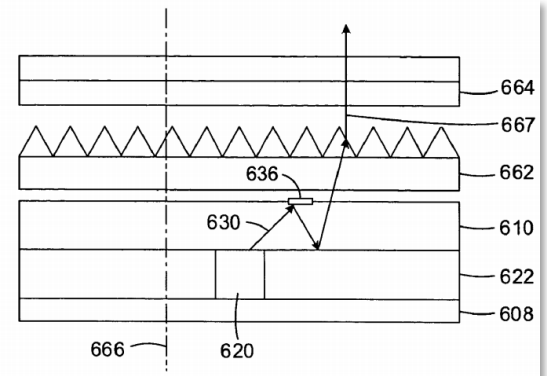

FIG. 11

Petitioner concedes that this element is not met as there is an airgap between the layers. Petition, at 40. Similar to Ground 1 above, Petitioner relies on Holman to meet this element. However, the prism sheets 58 and 60 of Holman are not BEFs as used in the '075 Patent. Ex. 2001, ¶ 46-47 *See supra* Section V.A.

For example, Holman differentiates between prism sheets and BEFs:

> "One unique aspect of elevated prism sheets 58 and 60 as used in all previous illumination examples, is that they do not have to exhibit the extreme standards in cosmetic perfection that have associated with 3M's BEF in direct view brightness enhancement applications […] Preventative measures include discarding all damaged BEF sheets. No such costly measures are needed with present prism sheets 58 and 60. Cosmetic defects in prism sheets 58 and 60 cannot be directly viewed."

Holman at pg. 121, section 8.2.1. Thus, even taking the arguments of Petitioner at face value that Epstein and Holman could be combined, the combination would not result in the invention of the '075 Patent.

C. Epstein Fails to Disclose Claim Element 1F, "the brightness enhancement film is configured to …preferentially reflect light

> **having a second orientation, different from the first orientation, *back into the lighting panel*."**

Epstein does not disclose a BEF reflecting light back into the lighting panel. As stated in the Petition, the BEF of Epstein **refracts** light 667 in a second direction that is closer to axis 666. Petition, at 41. (emphasis added). Petitioner then attempts to tie the alleged BEF of Epstein to an unrelated statement about an "intermediate layer … that causes some depolarization so that the light reflected may be recycled and passed through reflective polarizer." However, a POSITA would understand that what is contended by Petitioner from Epstein is not a BEF recycling light as described in the '075 patent. Ex. 2001, ¶62

As further evidence, as shown in Fig. 11, Epstein discloses only that the BEF **emits** light. Ex. 2001, ¶62. There is no teaching of the BEF reflecting light 667 back into the lighting panel. *Id.* Therefore, Epstein does not disclose a BEF that emits light having a first orientation and preferentially reflecting light having a second orientation different from the first orientation, back into the lighting panel for recycling as claimed.

D. Epstein does not disclose a "diffuser sheet…in direct contact with the reflector sheet." of Claim 7

As shown in Figure 11 of Epstein, there is an unambiguous space between the BEF 662 and diffuser sheet. Thus, the two are not "in direct contact" as claimed.

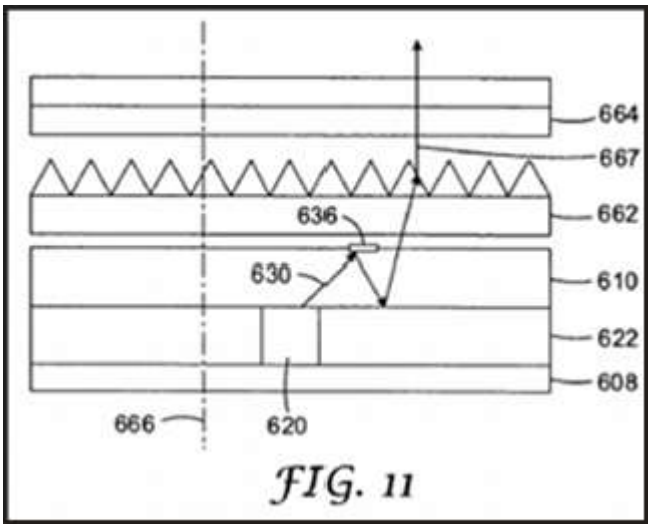

FIG. 11

In apparent recognition of the intervening space between the BEF 662 and diffuser sheet in Epstein and that these elements are not "in direct contact with" one another as claimed in the '075 Patent, Petitioner argues that "it would have been obvious to a POSITA to modify the arrangement of layers such that there was no such space, especially given that Epstein recognizes a challenge with the prior art systems is that they were 'thick and bulky.'" Petition at 48. However, Petitioner is again mischaracterizing Epstein. The full quote from Epstein reads:

> Traditionally, the manufacture of a LED array thus includes steps for encapsulating the LED die within an encapsulated package, and then locating and placing the encapsulated package within the array…A display, or illumination system, so constructed, consists of point sources of light that knit together visually from a long observation distance. However, the point sources of light break apart visually at shorter distances. Manufacturing is inherently inefficient due to the separate packaging and array population steps and the optics suffer due to the nature of the point source within an extended array. Furthermore, the resulting array tile is relatively ***thick and bulky***.

Epstein, [0003]. Epstein in this section is describing an LED display, not a backlight for an LCD. Ex. 2001, ¶ 63. The former are the kinds of systems one would observe a sports arena; a display made up entirely of LEDs of varying colors. This quotation has nothing to do with the factors at issue in constructing a backlighting unit for an LCD display. *Id.*

E. Epstein Fails to Disclose "the light extraction features are random features" of Claim 9.

Petitioner concedes that Epstein does not disclose this element of Claim 9. Petition, at 49. Petitioner instead argues that "it would've been obvious to a POSITA to modify the exemplary embodiments shown to include other light extraction features, including ones that randomize light." *Id.*

However, it would not be obvious to a POSITA to include other light extraction features, including ones "that randomize light" to the undesirable combination of Lamb and Epstein because adding additional light extraction components to that combination would only add further inefficiencies. Ex. 2001, ¶ 65.

F. Epstein Fails to Disclose that the BEF is "configured to limit direct emission…to thereby encourage light recycling/diffusion in the lighting panel" of Claim 10

Again, Petitioner concedes that Epstein does not actually disclose the elements of Claim 10. Petition, at 50. The only function of the Epstein BEF is to orient light in a direction more parallel to axis 666 and is simply a re-orientation of

the light to be more normal to the surface of the display. Ex. 2001, ¶ 66. Epstein does not mention the BEF reflecting or limiting direct emissions. *Id.* And the reflector polarizer described by Petitioner is not a BEF in Epstein but rather a layer above the light emitting components, namely either the guiding layer or the intermediate layer, and not the BEF. *Id.* It is not obvious to POSITA to include features of Lamb's brightness enhancement components in a system with Epstein since Lamb's light guides are edge lit and therefore entirely different in operation than any optical design based around Epstein's back lit LED system. *Id.*

Furthermore, a POSITA would not be motivated to combine Lamb with Epstein. Lamb employs several more elements than the inventions of the '075 Patent to accomplish recycling/diffusion in the lighting panel. Ex. 2001, ¶ 67.. The system described in Lamb is, again, an edge lighting system, not a back lighting system. Because of this, Petitioner again avoids referencing the figures of Lamb as this distinction would be otherwise readily apparent. Lamb's multi-stage lighting system is not readily combinable with a back lighting system of Epstein because a POSITA could not make a functional system from two incompatible systems as shown below. *Id.*

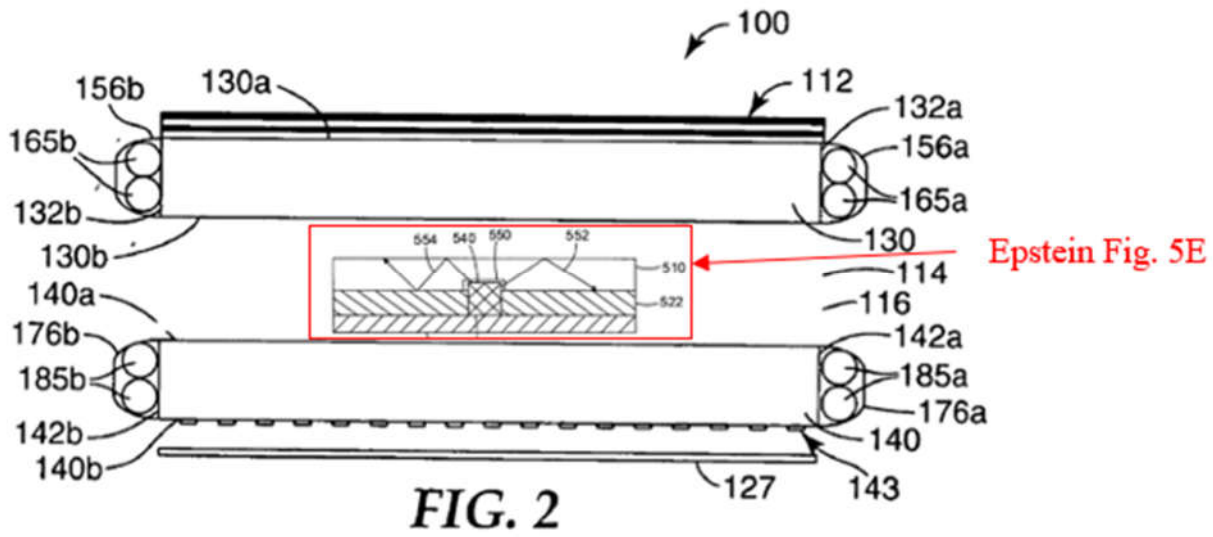

FIG. 2 of Lamb combined with Fig. 5E of Epstein

G. Dependent Claims 2-7 and 9-12 are Also Not Rendered Obvious Because Independent Claim 1 is not Obvious

Just as the combination of Epstein, Holman, and Lamb in view of a POSITA does not render independent claim 1 obvious, Petitioner cannot demonstrate that any of the dependent claims 2-7 and 9-12 are rendered obvious.

VII. CONCLUSION

The Board should exercise its discretion to deny the petition on each of Ground 1 thru 2. For Ground 1, Petitioner has not carried the burden that there is a POSITA would view Lamb with Mok and Holman, that it would be suitable to combine elements from Lamb and Holman with Mok, nor has Petitioner shown that even if combined, the combination of Mok, Holman and Lamb disclose each and every limitation of Claims 1-7 and 9-12. For Ground 2, Petitioner has not carried the burden that a POSITA would view Lamb with Epstein and Homan, that it would

be suitable to combine elements from Lamb and Holman with Epstein nor has Petitioner shown that even if combined, the combination of Epstein, Holman and Lamb disclose each and every limitation of Claims 1-7 and 9-12

Accordingly, Patent Owner respectfully requests the Board deny institution of this petition under Ground 1-2.

Respectfully submitted,

/Hao Ni/
Hao Ni
Counsel for Petitioner

CERTIFICATE OF COMPLIANCE

Per 37 C.F.R. §42.24(a) and (d), the undersigned hereby certifies that the Petition complies with the type-volume limitation of 37 C.F.R. §42.24(a)(i) because, exclusive of exempted portions, it contains 6,083 words as counted by the word-processing program used to prepare it.

Dated: January 26, 2024,

Respectfully submitted,

/s/ Hao Ni

Hao Ni (Reg. No. 53,858)
hni@nilawfirm.com
Timothy Wang (Reg. No. 61,554)
twang@nilawfirm.com
Neal Massand
nmassand@nilawfirm.com
Ni, Wang & Massand, PLLC
8140 Walnut Hill Lane, Suite 500
Dallas, Texas 75231
(t) (972) 075-4600
(f) (972) 314-0900

CERTIFICATE OF SERVICE

Pursuant to 37 C.F.R. § 42.6(e), the undersigned certifies that the above-captioned Mandatory Notice was served on counsel of record for the Petitioner by filing this document through the Patent Review Processing System as well as by delivering a copy via electronic mail to:

MFerrario@kilpatricktownsend.com (Lead Counsel)
MMorlock@kilpatricktownsend.com (Back-Up Counsel)

Dated: January 26, 2024, /s/ Hao Ni
Hao Ni (Reg. No. 53,858)