UNITED STATES PATENT AND TRADEMARK OFFICE

BEFORE THE PATENT TRIAL AND APPEAL BOARD

Hisense USA Corporation

Petitioner

v.

Brightplus Ventures LLC

Patent Owner

Case IPR2023-01410

U.S. Patent No. 8,294,075

Ex. 2006 - Declaration of William Bohannon

TABLE OF CONTENTS

EXHIBIT LIST 1

I. INTRODUCTION 2

A. EXPERT QUALIFICATIONS 3

B. BASIS OF MY OPINION AND MATERIALS CONSIDERED 4

C. SUMMARY OF OPINIONS 4

II. LEGAL STANDARDS TO BE APPLIED 4

A. PERSON OF ORDINARY SKILL IN THE ART 5

B. CLAIM CONSTRUCTION 5

C. VALIDITY 5

III. TECHNOLOGY OVERVIEW 7

IV. THE '075 PATENT'S OVERVIEW 8

V. A PERSON OF ORDINARY SKILL IN THE ART 9

VI. CLAIM CONSTRUCTION 10

A. "ON" 12

VII. PETITIONER'S PRIOR ART SUMMARY 12

A. MOK 12

B. EPSTEIN 13

C. HOLMAN 13

D. LAMB 14

VIII. GROUND 1 - PETITIONER'S MOK, HOLMAN AND LAMB COMBINATION FAILS TO RENDER OBVIOUS INDEPENDENT CLAIM 1. 15

A. MOK DOES NOT DISCLOSE CLAIM 1D OF "A BRIGHTNESS ENHANCEMENT FILM *ON* THE REFLECTOR." 16

B. THE "BRIGHTNESS ENHANCER 18" OF MOK DOES NOT RECYCLE LIGHT AND THUS IS NOT "A BRIGHTNESS ENHANCEMENT FILM" AS CLAIMED IN THE '075 PATENT. 17

C. A POSITA WOULD NOT BE MOTIVATED TO COMBINE LAMB WITH MOK AND/OR HOLMAN.....18

D. THE COMBINATION OF MOK, HOLMAN, AND LAMB ALSO DOES NOT DISCLOSE "A HEATSINK PANEL ON A SECOND SIDE OF THE AT LEAST ONE SUBSTRATE" OF CLAIM 6. 20

E. MOK DOES NOT DISCLOSE A "DIFFUSER SHEET IS IN DIRECT CONTACT WITH THE REFLECTOR SHEET…" AS RECITED IN CLAIM 7 22

F. THE COMBINATION OF MOK, HOLMAN, AND LAMB ALSO DOES NOT DISCLOSE LIMITING "DIRECT EMISSIONS FROM THE LIGHTING PANEL…TO THEREBY ENCOURAGE LIGHT RECYCLING/DIFFUSION IN THE LIGHTING PANEL" OF CLAIM 10 23

IX. GROUND 2 - PETITIONER'S EPSTEIN, HOLMAN AND LAMB COMBINATION FAILS TO RENDER OBVIOUS INDEPENDENT CLAIM 1. 23

A. A POSITA WOULD NOT BE MOTIVATED TO COMBINE LAMB WITH EPSTEIN AND HOLMAN. 23

B. EPSTEIN FAILS TO DISCLOSE CLAIM ELEMENT 1D, "A BRIGHTNESS ENHANCEMENT FILM *ON* THE REFLECTOR." 24

C. EPSTEIN FAILS TO DISCLOSE CLAIM ELEMENT 1F, "THE BRIGHTNESS ENHANCEMENT FILM IS CONFIGURED TO …PREFERENTIALLY REFLECT LIGHT HAVING A SECOND ORIENTATION, DIFFERENT FROM THE FIRST ORIENTATION, *BACK INTO THE LIGHTING PANEL*." 25

D. EPSTEIN DOES NOT DISCLOSE A "DIFFUSER SHEET IS IN DIRECT CONTACT WITH THE REFLECTOR SHEET…" AS RECITED IN CLAIM 7 25

E. EPSTEIN FAILS TO DISCLOSE "THE LIGHT EXTRACTION FEATURES ARE RANDOM FEATURES" OF CLAIM 9. 26

F. EPSTEIN FAILS TO DISCLOSE THAT THE BEF IS "CONFIGURED TO LIMIT DIRECT EMISSION…TO THEREBY ENCOURAGE LIGHT RECYCLING/DIFFUSION IN THE LIGHTING PANEL" OF CLAIM 10. 26

EXHIBIT LIST

Exhibit	Description
2001	Declaration of William K. Bohannon ("Bohannon Decl.")
2002	Curriculum vitae of William K. Bohannon
2003	Joint Claim Construction Statement
2004	Brightplus Ventures LLC's Opening Claim Construction Brief
2005	Hisense' Opening Claim Construction Brief

I, William K. Bohannon, hereby declare under penalty of perjury:

I. INTRODUCTION

1. I am an independent consultant. I am over eighteen years of age, and I would otherwise be competent to testify as to the matters set forth herein if I am called upon to do so.

2. I have prepared this Declaration for consideration by the Patent Trial and Appeal Board in the Inter Partes Reviews of U.S. Patent No. 8,294,075 ("the '075 Patent").

3. I provide this Declaration at the request of and have been retained by Ni, Wang & Massand, PLLC, which represents Patent Owner Brightplus Ventures LLC ("Brightplus" or "Patent Owner") in connection with the above-captioned Inter Partes Review.

4. I have been informed and understand that Petitioner Hisense USA Corporation ("Hisense" or "Petitioner") contends that claims 1-7 and 9-12 of the '075 Patent are invalid based on Grounds 1-2.

5. I am being compensated at an hourly rate of $350 per hour. My compensation is not dependent on the outcome of or any issue in relation to the above-captioned Inter Partes Review, and I have no interest in either party.

6. In forming my opinions, I relied on my knowledge, education, experience, and training in the field and on documents and information referenced in this Declaration.

A. Expert Qualifications

7. My curriculum vitae ("CV") is attached hereto as Exhibit 2002 and provides an accurate identification of my background and experience.

8. I have over (30) years of commercial industrial electronics experience including experience in the areas of LCD, Plasma, CRT and Large Screen Display Equipment: LCD manufacturing, substrates, drivers and other related components for rear screen displays including Avionics and cockpit displays.

9. From 1989 to 1994 I worked as a Chief Scientist for Display Products which included tracking liquid crystal display (LCD) and other display technology worldwide with a special emphasis on Japan and working closely with several Japanese companies and laboratories to develop new products and test existing LCD products.

10. Since 1994, I have been an independent consultant for Manx Research working on various display products including managing and conducting detailed technical product evaluations for all kinds of display products – LCD, CRT, Plasma and LED direct view, projection products of all types, CRT products and plasma products. Furthermore, I was also a design and procurement consultant to an

aerospace display company involved in re-designing Avionic LCD display sub-systems to use full color LED light sources instead of short arc lamps.

11. I also have 7 issued U.S. Patents in displays and display technology.

B. Basis of My Opinion and Materials Considered

12. I have reviewed the ’075 Patent, including the claims of the patent in view of the specification. In addition, I have reviewed the ’075 Patent’s prosecution history, Dr. Pattison’s declaration (Ex. 1003), the prior art discussed herein, and the remaining exhibits listed herein.

C. Summary of Opinions

13. In my opinion, claims 1-7 and 9-12 of the ’075 Patent aren’t rendered obvious by the prior art combinations cited in Grounds 1-2. In the remainder of this declaration, I demonstrate these in detail and address the lack of motivation to combine certain references.

II. LEGAL STANDARDS TO BE APPLIED

14. Counsel has advised me of the following legal standards that are relevant to IPR proceedings, which I have applied in forming my opinions.

15. I understand that an inter partes review (“IPR”) is a proceeding before the United States Patent & Trademark Office for evaluating the patentability of an issued patent’s claims based on prior-art patents and printed publications.

A. Person of Ordinary Skill in the Art

16. I understand that the claims of a patent are reviewed from the point of view of a hypothetical person of ordinary skill in the art ("POSITA") at the time of the filing of the patent. The "art" is the field of technology to which a patent relates.

B. Claim Construction

17. I understand that, in IPR proceedings, claim terms in a patent are given their ordinary and customary meaning as understood by a POSITA in the context of the entire patent and the prosecution history pertaining to the patent. If the specification provides a special definition for a claim term that differs from the meaning the term would otherwise possess, the specification's special definition controls. I have applied these standards in preparing the opinions in this declaration.

C. Validity

18. I understand that, in this proceeding, Petitioner has the burden of proving that the challenged claims of the '075 Patent are unpatentable by a preponderance of the evidence. I understand that "preponderance of the evidence" means that a fact or conclusion is more likely true than not true.

19. I understand that there are two ways in which prior art may render a patent claim unpatentable. First, the prior art can "anticipate" the claim. Second, the prior art can render the claim "obvious" to a POSITA. I understand that for an invention claimed in a patent to be patentable over the prior art, it must not be

anticipated and must not be obvious based on what was known before the invention was made.

20. I understand that a patent claim may be invalid as anticipated under 35 U.S.C. § 102 if a prior art reference discloses each element of the claimed subject matter.[1]

21. I understand that a patent claim may be invalid as obvious under 35 U.S.C. § 103 if the differences between the subject matter claimed and the prior art are such that the claimed subject matter as a whole would have been obvious to a POSITA at the time the invention was made. I also understand that several factual inquiries underlie a determination of obviousness. These inquiries include (1) the scope and content of the prior art, (2) the level of ordinary skill in the field of the invention, (3) the differences between the claimed invention and the prior art, and (4) any objective evidence of non-obviousness (i.e., "secondary considerations").

22. I further understand that when a party alleges obviousness, that party may rely on one reference or a combination of multiple references. I also understand that, when a party alleges obviousness based on a combination of references, that party should identify a reason why a POSITA would have been motivated to combine the asserted references in the manner recited in the claims and to explain

[1] Patent laws discussed herein refer to AIA versions of the relevant laws.

why a POSITA would have had a reasonable expectation of success in making such combinations.

23. I understand that an obviousness analysis permits the application of "common sense" in examining whether a claimed invention would have been obvious to a POSITA. For example, I understand that combining familiar elements according to known methods and in a predictable way may suggest obviousness when such a combination would yield nothing more than predictable results. And I understand a party asserting obviousness should still provide a specific motivation to combine the references as recited in the claims and explain why one would have reasonably expected to succeed in doing so.

24. I understand that one indicator of nonobviousness is when prior art teaches away from combining certain known elements. For example, a prior art reference teaches away from the patent's particular combination if it leads in a different direction or discourages that combination, recommends steps that would not likely lead to the patent's result, or otherwise indicates that a seemingly inoperative device would be produced.

III. TECHNOLOGY OVERVIEW

25. The relevant field for that of the '075 Patent is that of solid-state lighting systems, and more particularly to adjusting the light output of solid-state lighting (e.g. backlighting). Generally, the field relates to employing solid state

lighting devices (e.g., LEDs) to illuminate a liquid crystal display (LCD) panel. This may be accomplished through the employment of several structures and layers incident upon the surface on which the LEDs are mounted as well as between the LEDs and the LCD panel. These structures may include reflective surfaces, polarizers of varying type and function, diffusers, lenses, brightness enhancement layers and others. The purpose and alignment of these structures is intended to maximize the amount of light that is directed through the LCD panel at an angle and intensity that is appropriate for viewing the images displayed on the LCD panel.

IV. THE '075 PATENT'S OVERVIEW

26. The '075 patent describes the use of LEDs to illuminate an LCD panel. The '075 patent accomplishes this by orienting the LEDs on a substrate to face in the direction normal to the plane of the LCD panel. The light emitted by the LEDs passes through a diffuser and into a specific type of brightness enhancement film (BEF). The term brightness enhancement film or BEF, is not a standardized term understood the same way by everyone but is merely a way of referring to a class of films with different characteristics. The BEF of the '075 patent is designed to allow light having a first orientation (i.e., entering at an incident angle below a certain threshold) to pass through the BEF and reflecting light having a second orientation (i.e., entering at an incident angle outside of a certain threshold) back towards the LED substrate. The LED substrate includes a reflector constituting a sheet or

covering thereon. The reflector reflects light back into the diffuser and the BEF in a process referred to as "recycling." The purpose of recycling light is to ensure that the light reaching the BEF is of the first orientation so that as the light passes through the LCD panel it is of an appropriate angle and intensity for adequately illuminating the panel for a viewer.

V. A PERSON OF ORDINARY SKILL IN THE ART

27. I understand that the factors considered in determining the ordinary level of skill in a field of art at issue include the level of education and experience of persons working in the field; the types of problems encountered in the field; and the sophistication of the technology at the time of the purported invention, which I understand to be as early as April 21, 2006. I understand that a person of ordinary skill in the art ("POSITA") is not a specific real individual, but rather is a hypothetical individual having the qualities reflected by the factors above. I understand that a POSITA would also have knowledge from the teachings of the prior art, including the art cited below.

28. Based on these factors, on or before April 21, 2006, a POSITA relating to the technology of the '075 Patent would have (a) a Bachelor's of Science degree in a technical field and at least four years of experience in the field of design and/or manufacture of display systems; (b) a Master's of Science degree in a technical field and at least two years of experience in the field of design and/or manufacture of

display systems; or (c) a PhD in a technical field relating to the design and/or manufacture of display systems. Additional graduate education could substitute for professional experience, or significant experience in the field could substitute for formal education. A POSITA is presumed to have knowledge of all relevant prior art, and therefore would have been familiar with each of the references cited in this declaration and the full range of teachings they contain.

29. With respect to the subject matter of the '075 Patent, a Bachelor of Art in Mathematics is equivalent to a Bachelor of Science degree in a technical field.

30. Before April 21, 2006, my level of skill in the art was at least that of a POSITA. I am qualified to provide opinions concerning what a POSITA would have known and understood at that time, and my analysis and conclusions in this declaration are from the perspective of a POSITA prior to April 21, 2006. Furthermore, I have taught, worked with and supervised persons whom I would consider to be persons of ordinary skill in the art according with the description given above.

VI. CLAIM CONSTRUCTION

31. For IPR petitions filed after November 13, 2018, I understand the Patent Trial and Appeal Board ("Board") construes claim terms as having their ordinary and customary meaning to a POSITA at the time of invention (i.e., the same standard used in district court). I have applied this standard in rendering my opinions on claim

construction. In addition, I have been asked to assume that the claims are not indefinite.

32. Claim terms are generally given their plain and ordinary meaning, which is the meaning that the term would have to a person of ordinary skill in the art in question at the time of the invention. When the words in the context of the surrounding claim language make the ordinary meaning readily apparent, claim construction involves little more than the application of the widely accepted meaning of commonly understood words.

33. The claims must be read in view of the specification of which they are a part. The specification is the best source for understanding a technical term. The construction that stays true to the claim language and most naturally aligns with the patent's description of the invention will be, in the end, the correct construction.

34. Although terms must be construed in light of the specification, it is improper to import a limitation from the specification into the claims. Courts must capture the scope of the actual invention, rather than strictly limit the scope of claims to disclosed embodiments or allow the claim language to become divorced from what the specification conveys is the invention.

35. The prosecution history can often inform the meaning of the claim language by demonstrating how the inventor understood the invention and whether the inventor limited the invention in the course of prosecution, making the claim

scope narrower than it would otherwise be. The prosecution history consists of the complete record of the proceedings before the PTO and includes the prior art cited during the examination of the patent.

A. "on"

36. The term "on" as used in the '075 Patent requires contact either directly on, or with intervening elements present. This construction is described in the patent specification in col. 6:47-51. This is consistent with the purpose of the invention in the '075 Patent which avoids light loss or light leakage. *See* Ex. 2003 at 4, Ex. 2004 at 9-10, Ex. 2005 at 9-10.

VII. PETITIONER'S PRIOR ART SUMMARY

37. I understand that Petitioner has identified two primary references and two secondary references as prior art to the '075 Patent in its Grounds 1-2.

A. Mok

38. Petitioner's primary reference for Ground 1 is U.S. Patent Publication No. 2006/0227545 ("Mok") filed on April 11, 2005. Mok describes a light emitting panel with a base panel having a plurality of light emitting elements mounted thereon. Specifically, Mok describes using a diffuser to accomplish light recycling. Mok [0021] "A reflective surface 50 may be provided on the base panel 12 to 'recycle' (i.e., reflect) light which may be reflected by the back surface 60 of the diffuser 16 (i.e., light incident on back surface 60 of the diffuser 16 at an angle that

exceeds the critical angle for the particular diffuser 16)." *Id.* The light emitting panel of Mok includes base panel 12, diffuser 16 and brightness enhancer 18 spaced apart by distances 48 and 54 respectively. These elements are arranged in linear stacks.

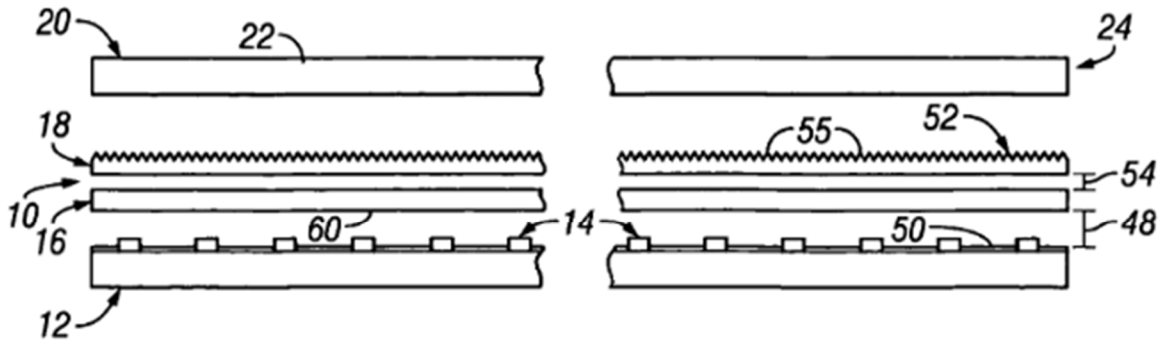

FIG. 1

Mok Fig. 1

B. Epstein

39. Petitioner's primary reference for Ground 2 is U.S. Patent Publication No. 2005/0265029 ("Epstein") filed on June 1, 2004. Petitioner further relies on Epstein as one of two secondary references for Ground 3. Epstein describes an array of LEDs on a substrate over which an intermediate layer and a guiding layer are arranged. The LEDs of Epstein function to emit light upwards.

40. [intentionally deleted]

C. Holman

41. Petitioner relies on WO 03/056876 ("Holman") as one of two secondary references for both Grounds 1 and 2. Holman was filed December 13,

2002, and claims priority to a US filing dated December 14, 2001. Holman describes a multi-layered LED light source array that employs reflectors, elevated prismatic films, and polarization converting films to collimate light for optimal illumination of an LCD panel.

D. Lamb

42. Petitioner relies on U.S. Patent Publication No. 2005/0135115 ("Lamb") as one of two secondary references for both Grounds 1 and 2. Lamb was filed December 23, 2003.

43. Lamb is directed to a side lighting or edge lighting system using cold cathode fluorescent lamps (CCFLs). Lamb at [0034] Specifically, Lamb teaches a back lighting system 100 which includes a double pair of CCFL light sources 165a and 165b placed at the opposing edges 132a and 132b of the first lightguide 130. Lamb at [0036] Furthermore, a second, double pair of light sources 185a and 185b are placed at the opposing edges 142a and 142b of the second lightguide 140. Lamb [0037]

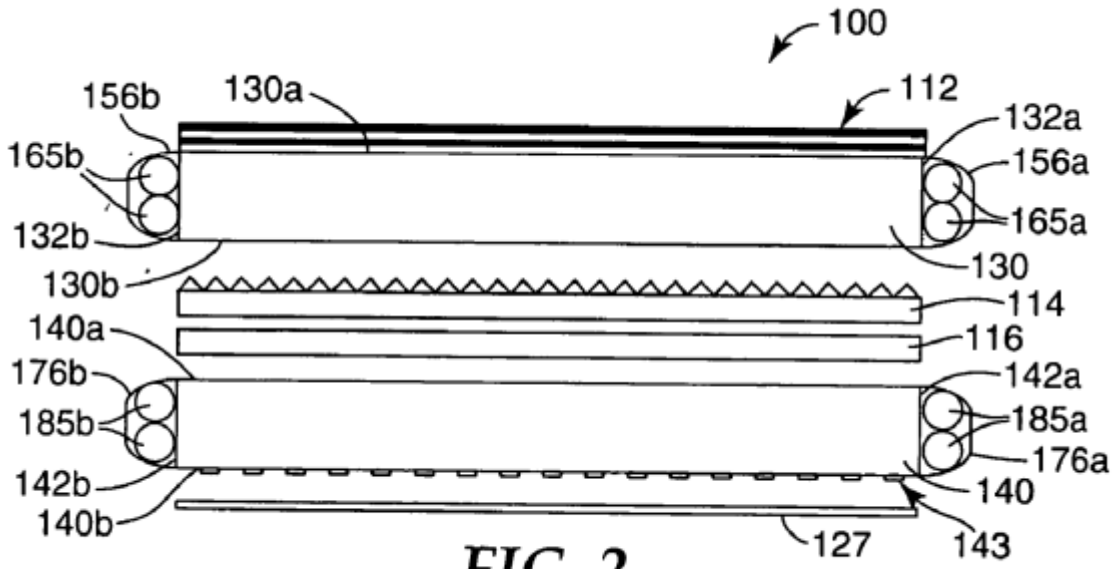

FIG. 2

As disclosed in Lamb, the cold cathode fluorescent lamp light sources 165a and 165b include "lamp cavity reflectors 156a, 156b" and the cold cathode fluorescent lamp light sources 185a, 185b include "lamp cavity reflectors 176a, 176b." Lamb [0036-0037]

VIII. GROUND 1 - PETITIONER'S MOK, HOLMAN AND LAMB COMBINATION FAILS TO RENDER OBVIOUS INDEPENDENT CLAIM 1.

44. Petitioner relies on Mok as its primary reference for Gound 1. But Petitioner fails to demonstrate that a POSITA would be motivated to combine Lamb with Mok and Holman, nor demonstrate that the combination of Mok, Holman and Lamb teach or render obvious claim 1.

A. Mok Does Not Disclose Claim 1D of "a brightness enhancement film *on* the reflector."

45. Mok discloses a diffuser spaced at a distance from the reflective surface and specifically teaches an "air gap." As discussed in the claim construction above, the term "on" requires that the BEF be "directly on" the diffuser or on with intervening elements present. An air gap makes for a larger, thicker structure with the potential for undesirable light leakage and lower efficiency.

46. Petitioner concedes that this "air gap" is not an intervening layer. Petition, at 18. As such, Petitioner then relies on Prism sheets 58 and 60 of Holman to disclose this element. *Id.* However, the prism sheets 58 and 60 are not BEFs. For example, Holman differentiates between prisms sheets and BEFs:

> "One unique aspect of elevated prism sheets 58 and 60 as used in all previous illumination examples, is that they do not have to exhibit the extreme standards in cosmetic perfection that have associated with 3M's BEF in direct view brightness enhancement applications […] Preventative measures include discarding all damaged BEF sheets. No such costly measures are needed with present prism sheets 58 and 60. Cosmetic defects in prism sheets 58 and 60 cannot be directly viewed."

Holman at 121, section 8.2.1

47. Recognizing the fallacy of this argument, Petitioner then claims that "Holman discloses a BEF 131 that rests on a transparent dielectric material 144." Petition at 19. Petitioner then claims it would've been obvious to modify Mok's layer arrangement using Holman's teachings because ***there is a general pressure in the art to reduce the thickness of panels***. Petition, at 20. (emphasis added)

However, Mok specifically teaches away from this reasoning as Mok states "Generally speaking, ***larger spaced-distances 48 will improve the uniformity of the light produced by the panel, but at the expense of panel thickness and some loss of efficiency***. By way of example, in one embodiment, the diffuser 16 is separated from the base panel 12 by a distance 48 of about 50 millimeters (mm) or less." Mok, [0023](emphasis added)

B. The "Brightness Enhancer 18" of Mok Does Not Recycle Light and Thus is Not "a brightness enhancement film" as claimed in the '075 Patent.

48. Mok explicitly states "the brightness enhancer 18 comprises a brightness enhance film (BEF) available from 3M and sold under the registered trademark Vikuiti®. Mok, [0024]. However, based on my experience in the industry the 3M product is not a brightness enhancement film because it does not recycle light as required of a "brightness enhancement film" as claimed in the '075 Patent. The disclosure in Mok is merely redirecting light i.e., changing the direction of the light so that the emitted light is on axis and directed perpendicular to the plane of the display. The "brightness enhancement film" as taught in the '075 Patent has 2 angles, one that emits (e.g., passes) light and one that reflects light to be recycled. This is explicitly recited in Claim 1. Mok does not disclose or teach light recycling by the BEF.

49. A POSITA would know that there is no standard BEF and that a "brightness enhancement film" is just that, any kind of film that enhances brightness. The '075 Patent's brightness enhancement film enhances brightness by enabling light recycling while other BEFs do other things.

C. A POSITA Would Not Be Motivated to Combine Lamb with Mok and/or Holman.

50. Mok and Holman talk about solving the problem of a compact and efficient backlight. Lamb instead discloses a system for illuminating a display that would now be commonly known as "edge lighting". Edge lighting uses light sources arranged around the edge of a light guide behind and emitting perpendicular to the surface of a display. The light from the light sources propagates through the light guide after making a 90 degree turn before interacting with the diffuser layer and BEF. Thus, far less light is incident on the BEF at an angle that would allow for emission until it has been turned around again and again and then recycled repeatedly to allow for correction. Lamb figure 2 is provided below:

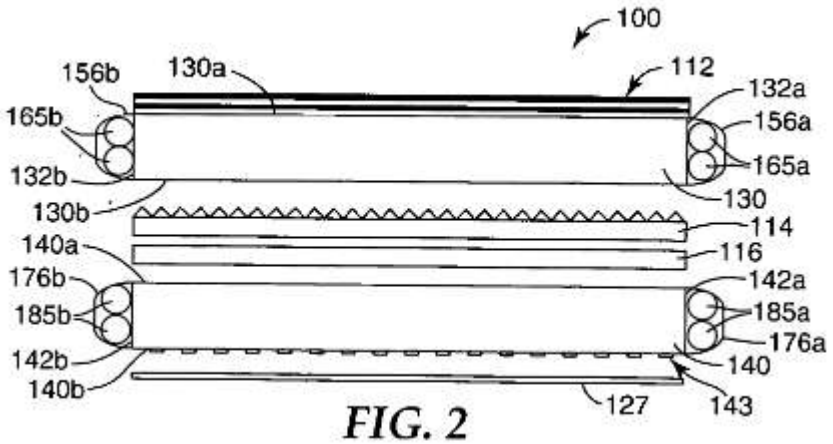

FIG. 2

51. As shown above in Fig. 2[2], and consistent with all figures of Lamb, Lamb employs, in order, a first set of light sources coupled to a light guide 140, a diffuser sheet 116, a BEF 114, a second set of light sources coupled to a second light guide 130, and a recycling enhancement structure 112 disposed at the surface 130a which comprises a reflective polarizer. Thus, Lamb seeks to accomplish with edge lighting, light guides and two layers of light recycling features what the ’075 patent accomplishes with a far simpler arrangement. The system described in the ’075 patent employs the BEF "preferentially emit[s] light having a first orientation from the lighting panel and preferentially reflect[s] light having a second orientation…back into the lighting panel." This is distinct from the combination of Mok and Lamb which would use multiple structures to accomplish the preferential emission/reflection (e.g., reflective polarizer, diffuser, BEF).

52. Lamb's multi-stage lighting system is not readily combinable with a back lighting system such as that of Mok as seen below because the light guides in Lamb (130, 140) are designed for edge lighting and force the light through a 90-degree turn - from the lamp lit edge to the emitting surface. The ’075 Patent’s invention requires no such light guide or turn. If Mok's LED substrate is mounted

[2] Also, in Fig. 2 – the circles used for the edge lighting on the edges are cold cathode fluorescent lamps or CCFL tubes and not a compact LED system.

on top of Lamb's light guide 140, it will block all of that section's light as shown below.

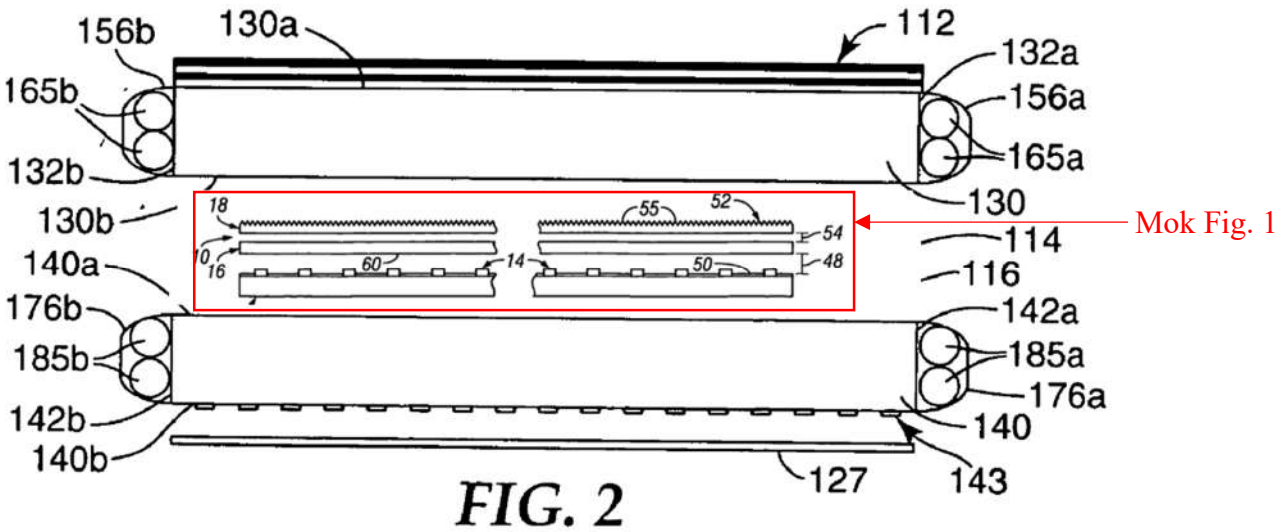

FIG. 2

MOK FIG. 1 Combined with LAMB FIG. 2

D. The Combination of Mok, Holman, and Lamb Also Does Not Disclose "a heatsink panel on a second side of the at least one substrate" of Claim 6.

53. Petitioner concedes that Mok does not explicitly disclose a heatsink panel and instead argues that "a printed circuit board is a heat sink." Petition at 34. However, a printed circuit board is printed on the surface of the substrate. It does not penetrate the substrate. It is not designed, intended or functional to draw heat away from the LEDs without substantially more than being simply a printed circuit board.

54. In the alternative, Petitioner relies on Holman and contends that the "Holman describes a base layer 220 that functions as part of a heat sink." Petition, at 34. However, the actual text of Holman states that "Not only must the base layer material be thermally stable, it must be counted on to service as part of the collective

heat sink." Holman at pg. 39, Sec. 4.1.4.1. Holman does not teach or suggest that the base layer is considered by itself a heatsink panel on a second side of the at least one substrate. Instead, as shown in FIG. 13A in Holman below:

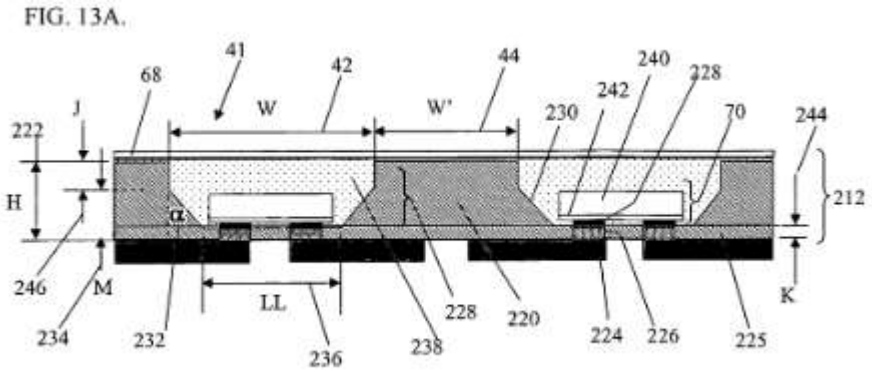

55. Base layer 220 is the intervening space between the two flip chip mounted LEDs. It is well known in the art that this component of an LED package would be composed of an electrically insulating material. Holman confirms this "The individual LEDs 70 are mounted flip-chip…on composite, electrically-insulating, reflective base layers 220 and 225…" Holman. pg. 37, Sec 4.1.4.1. Electrically insulating materials are generally not advantageous for heat sinking because they do not conduct heat any better than they conduct electricity. Even granting Petitioner the most favorable interpretation of Holman, that the base layers 220 and 225 somehow function as heat sinks, the base layer of the LED package is not a heat sink within the meaning ascribed to it in the '075 Patent. The heatsink of the '075 Patent is configured to draw heat away from the substrate in a direction opposite to a direction of light emission. Petitioner has shown an LED package. An

LED package is mounted on the substrate of the lighting panel. All Petitioner has demonstrated is that Holman discloses moving heat from the LEDs to the substrate, not away from the substrate or the sensitive display components which they light.

E. Mok does not disclose a "diffuser sheet is in direct contact with the reflector sheet…" as recited in Claim 7

56. Mok teaches that: "[g]enerally speaking, larger spaced-distances 48 will improve the uniformity of the light produced by the panel, but at the expense of panel thickness and some loss of efficiency." Mok, [0023]. It is my understanding based on the disclosure, Mok is teaching that spacing between the reflective surface and diffuser is a necessary and unavoidable part of the design described in Mok rather than teaching reducing the distance 48 between reflective surface 50 and diffuser 16 such that they are in contact. Mok does not teach or suggest that the diffuser sheet would be in contact with the reflector sheet. To make the distance to be zero would ignore the teaching of Mok and make a significant alteration to the function of the design of Mok and would not be done by a POSITA. This is further contradicted by the only disclosure of the distance between the diffuser sheet and reflector sheet in Fig. 1 of Mok.

F. The Combination of Mok, Holman, and Lamb Also Does Not Disclose Limiting "direct emissions from the lighting panel…to thereby encourage light recycling/diffusion in the lighting panel" of Claim 10

57. To summarize the above, Mok does not describe a BEF that preferentially emits light having a certain incident angle. Rather it describes a BEF that "comprises a plurality of optical elements, such as prisms 55 defined by the front surface 52 of the brightness enhancer 18, that collect light from the diffuser 16 and direct it out the front surface 52 of the brightness enhancer 18. The brightness enhancer 18 thereby maximizes the on-axis brightness of the panel 10." Mok, [00240] This is merely describing re-orientation of the light to be more normal to the surface of the display, not recycling the light.

IX. GROUND 2 - PETITIONER'S EPSTEIN, HOLMAN AND LAMB COMBINATION FAILS TO RENDER OBVIOUS INDEPENDENT CLAIM 1.

58. Petitioner relies on Epstein as its primary reference for Gound 2. But Petitioner fails to demonstrate that a POSITA would be motivated to combine Lamb with Epstein and Holman, nor demonstrate that the combination of Epstein, Holman and Lamb teach or render obvious claim 1.

A. A POSITA Would Not be Motivated to Combine Lamb with Epstein and Holman.

59. As discussed in Ground 1 above Lamb uses a clumsy, double stack of edge lit backlights with CCFLs instead of rear mounted LEDs like those used in

Epstein and Holman. In fact Lamb's CCFL arrangement wouldn't even be considered by a POSITA seeking to improve a LED based system.

B. Epstein Fails to Disclose Claim Element 1D, "a brightness enhancement film *on* the reflector."

60. Epstein does not disclose a BEF directly on the reflector as described in the '075 Patent. As shown in Epstein Fig. 11, there is an air gap between BEF 662 and guiding layer 610. Therefore, the BEF is not directly on the intermediate layer 610 and the layers presented in Epstein are not stacked in direct contact.

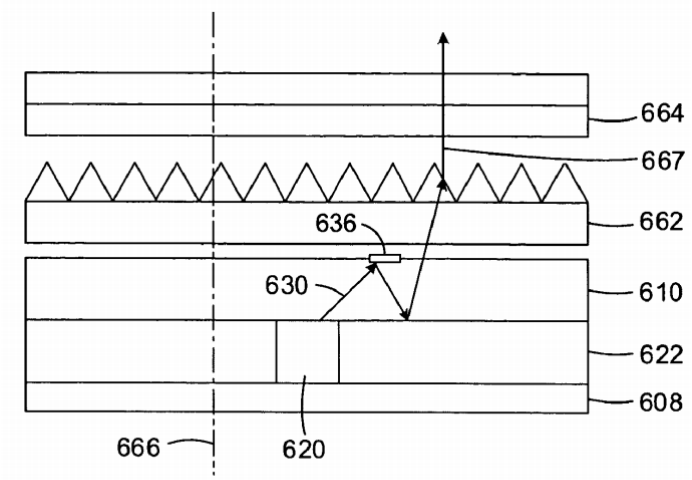

FIG. 11

61. Petitioner concedes that this element is not met as there is an airgap between the layers. Petition, at 40. Again, Petitioner relies on Holman to meet this element. I have addressed why Holman does not meet this element above. *See supra* ¶46-47.

C. Epstein Fails to Disclose Claim Element 1F, "the brightness enhancement film is configured to …preferentially reflect light having a second orientation, different from the first orientation, ***back into the lighting panel***."

62. Epstein does not disclose a BEF reflecting light back into the lighting panel. As stated in the Petition, the BEF of Epstein **refracts** light 667 in a second direction that is closer to axis 666. As shown in Fig. 11, Epstein only discloses that the BEF **emits** light. Petition, at 42. There is no teaching of the BEF reflecting light 667 back into the lighting panel. Therefore, Epstein does not disclose a BEF that emits light having a first orientation and preferentially reflecting light having a second orientation different from the first orientation, back into the lighting panel for recycling.

D. Epstein does not disclose a "diffuser sheet is in direct contact with the reflector sheet…" as recited in Claim 7

63. As discussed in Paragraphs 60 & 61 above and seen in Figure 11 of Epstein, there is an unambiguous space between the BEF 662 and diffuser sheet. Thus, the two are not "in direct contact." To the extent that Petitioner is arguing a POSITA would be motivated to modify the arrangement of layers in Epstein such that there was no such space to address "thick and bulky" issues, Epstein does not teach or suggest that. *See* Epstein, [0003] Epstein uses the term "thick and bulky" in describing an LED display in the prior art, not in addressing the backlighting for an LCD. The former are the kinds of systems one would observe at a sports arena;

a display made up entirely of LEDs of varying colors. The portions cited by Petitioner have nothing to do with the factors at issue in constructing a backlighting unit for LCD displays, many of which are used in light weight mobile devices.

E. Epstein Fails to Disclose "the light extraction features are random features" of Claim 9.

64. Petitioner concedes that Epstein does not disclose this element of Claim 9. Petition, at 49. Petitioner only argues that "it would've been obvious to a POSITA to modify the exemplary embodiments shown to include other light extraction features, including ones that randomize light." *Id.*

65. However, I disagree with Dr. Pattison that it's obvious to a POSITA to include other light extraction features, including ones "that randomize light" to a combination (however that could be done) of Lamb and Epstein since adding one more light extraction component to that mess would only add further inefficiencies.

F. Epstein Fails to Disclose that the BEF is "configured to limit direct emission…to thereby encourage light recycling/diffusion in the lighting panel" of Claim 10.

66. Petitioner concedes that Epstein does not disclose this element of Claim 10. The only function of a BEF in Epstein is to orient light in a direction more parallel to axis 666. This function is simply a re-orientation of the light to be more normal to the surface of the display. There is no mention of the BEF reflecting or limiting direct emissions. Further, the reflector polarizer described by Petitioner is not disclosed as a BEF in Epstein. The reflective polarizer is a layer above the light

emitting components, namely either the guiding layer or the intermediate layer, not the BEF. It is not obvious to POSITA to include features of Lamb's brightness enhancement components in a system with Epstein since Lamb's light guides are edge lit and therefore entirely different in operation than any optical design based around Epstein's back lit LED system.

67. Likewise, as discussed above, a POSITA would not be motivated to combine Lamb with Epstein. Lamb employs several more elements than the ’075 Patent to accomplish recycling/diffusion in the lighting panel. The system described in Lamb is, again, a bulky, CCFL edge lighting system, not a compact LED back lighting system. Petitioner chooses to avoid referencing the figures of Lamb as this distinction would be immediately apparent if it had. Lamb's multi-stage lighting system is not readily combinable with a back lighting system such as that of Epstein because a POSITA could not make a functional system from two incompatible systems as shown below.

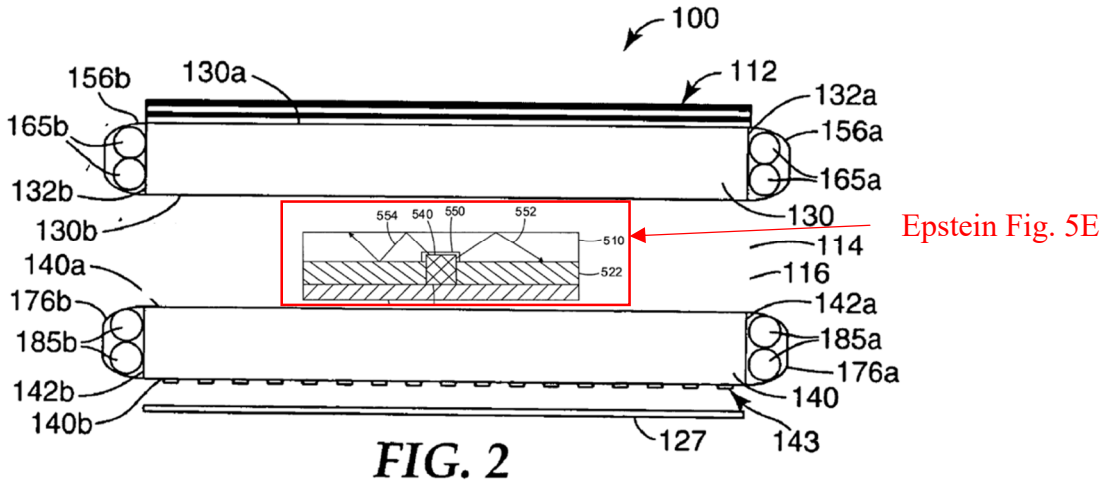

FIG. 2 of Lamb combined with Fig. 5E of Epstein

68. I declare that all statements made herein of my own knowledge are true, and that all statements made on information and belief are believed to be true; and that these statements were made with the knowledge that willful false statements and the like so made are punishable by fine or imprisonment, or both, under Section 1001 of Title 18 of the United States Code.

Dated January 26, 2024

By _____
William K. Bohannon,