(19) Japan Patent Office (JP)

(12) JAPANESE UNEXAMINED PATENT APPLICATION PUBLICATION (A)

(11) Patent Application Publication No. JP 2004-139871 A (P2004-139871A)

(43) Publication Date: May 13, 2004 (Heisei 16)

(51) Int. Cl.[7]		FI			Theme Code (Reference)
F21V	7/00	F21V	7/12	L	2H091
F21S	2/00	F21S	29/00	A	3K014
F21V	29/00	G02F	1/13357		
G02F	1/13357	F21S	1/00	E	
// F21Y	103:00	F21Y	103:00		

Examination Request: Not yet Total No. of Claims: 6 OL (Total 13 pages)

(21) Application No. JP 2002-304287 (P2002-304287)

(22) Date of Filing October 18, 2002 (Heisei 14)

(71) Applicant 000005049
Sharp Corporation
22-22 Nagaike-cho, Abeno-ku, Osaka-shi, Osaka-fu

(74) Agent 100103296
Ryuya Koike, Patent Attorney

(74) Agent 100073667
Masaharu Kinoshita, Patent Attorney

(72) Inventor Masaki Shimizu
c/o Sharp Corporation
22-22 Nagaike-cho, Abeno-ku, Osaka-shi, Osaka-fu

F-Term (Reference) 2H091 FA14Z FA23Z FA32Z FA41Z FB02 FD12 FD13 FD22 LA04 LA18
3K014 AA02 LB03

(54) [Title of Invention] LIGHTING DEVICE, BACKLIGHT DEVICE, AND LIQUID CRYSTAL DISPLAY DEVICE

(57) [Abstract]
[Problem] In a lighting device equipped with a light source and a reflective plate that reflects light emitted from the light source, warping or bending of the reflective plate may occur when the lighting device reaches a high temperature due to continuous operation of the light source or the like, and thus, provided is a lighting device that prevents such.
[Resolution Means] By dividing the reflective plate, configuring from a plurality of reflective plate constituents, and disposing reflective plate constituents adjacent to each other at a predetermined width, a lighting device can be provided in which no warping or bending of the reflective plate occurs even when the reflective plate constituents expand due to a temperature increase.
[Selected Drawing] FIG. 1

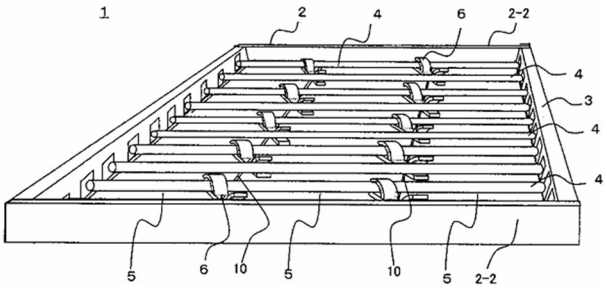

[Scope of Patent Claims]
[Claim 1]
A lighting device comprising a light source and a reflective plate that reflects light emitted from the light source, wherein the reflective plate is formed by a plurality of reflective plate constituents that are adjacent to each other and have a predetermined gap.
[Claim 2]
A lighting device comprising a light source and a reflective plate that reflects light emitted from the light source, the reflective plate being formed by combining a plurality of reflective plate constituents,
wherein adjacent reflective plate constituents are disposed having one edge overlapping each other.
[Claim 3]
The lighting device according to claim 1 or claim 2,
further comprising a locking piece disposed across respective adjacent edges of the adjacent reflective plate constituents, wherein
each adjacent reflective plate constituent is locked to a housing by the locking piece.
[Claim 4]
The lighting device according to claim 3, wherein the locking piece has a locking part for locking the reflective plate constituent to the housing and a supporting part for supporting the light source.
[Claim 5]
A backlight device comprising, in addition to the lighting device according to any one of claims 1 to 4, a diffusion plate or a light guide plate that diffuses light emitted from the light source into a planar uniform light and emits such from a radiation surface.
[Claim 6]
A liquid crystal display device comprising, in addition to the backlight device according to claim 5, a liquid crystal panel disposed opposite to the radiation surface.
[Detailed Description of Invention]
[0001]
[Technical Field of Invention]
The present invention relates to a lighting device equipped with a light source and a reflective plate that reflects light emitted from the light source, and primarily relates to a backlight device that is a lighting device for a transmissive display device, as well as a device used in a liquid crystal display device, the most typical transmissive display device.
[0002]
[Conventional Art]
A lighting device is generally equipped with a reflective plate that reflects light from a light source in a desired direction. When warping or deflection occurs in the reflective plate as a result of various factors, light reflected from a light source may not be reflected in the desired direction, thus compromising favorable lighting conditions.
[0003]
In response to this, patent document 1 discloses art that aims to prevent warping and bending of the reflective plate, in which a large reflective plate is formed by combining a plurality of reflective plate constituents, thereby reducing the size of a single reflective plate constituent, in order to solve the problem of warping and deflection caused by strength problems when the reflective plate is enlarged.
[0004]
[Patent Document 1]
JP H10-125119 A
[0005]
[Problem to Be Solved by Invention]
However, the art taught in patent literature 1 does not give particular consideration to problems that arise such as when the temperature of the reflective plate gradually increases due to prolonged operation of the light source.
[0006]
That is, when a predetermined temperature is reached, the reflective plate constituents expand due to the temperature increase and
contact adjoining reflective plate constituents, and as a result, a problem arises wherein contacting edges bend or the entire reflective plate constituent warps.
[0007]
When a lighting device provided with such a reflective plate is used as a backlight device, unforeseeable deformation occurs in parts that were bent or warped, resulting in a surface in which reflectivity from the reflective plate is uneven; additionally, when the backlight device is used as a backlight device for a liquid crystal display device, uneven

brightness occurs on the display screen of the liquid crystal display device, leading to a decrease in image quality.
[0008]
[Means for Solving Problem]
Therefore, in order to solve the foregoing problem, the lighting device of the present invention has a configuration including a light source and a reflective plate that reflects light emitted from the light source, wherein the reflective plate is formed by a plurality of reflective plate constituents that are adjacent to each other and have a predetermined gap.
[0009]
Note that the predetermined gap mentioned above refers to a length that takes into account expansion of the reflective plate constituent due to temperature. According to this configuration, when the temperature of the reflective plate increases due to the operation of the light source or the like, even when the reflective plate constituent expands, the reflective plate constituents will not make contact until the gap reaches zero. Therefore, when a generally conceivable temperature is assumed during design and the gap is formed in consideration of expansion due to a temperature increase, it is possible to prevent the reflective plates from coming into contact with each other.
[0010]
Furthermore, the lighting device has a configuration including a light source and a reflective plate that reflects light emitted from the light source, the reflective plate being formed by combining a plurality of reflective plate constituents, wherein adjacent reflective plate constituents are disposed with one edge overlapping each other.
[0011]
According to the above configuration, when the temperature of the reflective plate increases due to the operation of the light source or the like, opposing edges (hereinafter referred to as adjacent edges) of adjacent reflective plate constituents do not come into contact when the reflective plate constituents expand. Therefore, no stress due to thermal expansion is applied to either adjacent reflective plate constituent, thus preventing the occurrence of bending or warping of the reflective plate.
[0012]
PET (polyethylene terephthalate) containing high reflectivity materials, improved materials that enhance shape retention by attaching metal materials such as aluminum to one side of the PET material, or the like are often used as the reflective plate constituent; however, these materials often do not possess the strength to maintain their shape without bending on their own. Therefore, by locking the reflective plate constituents to a housing made of aluminum or magnesium plates and having a predetermined strength, it is possible to maintain strength; however, when a locking piece is provided for each of the reflective plate constituents divided into a plurality, a very large number of locking pieces is required.
[0013]
Therefore, any of the above lighting devices is equipped with locking pieces disposed across respective adjacent edges of the adjacent reflective plate constituents, wherein each adjacent reflective plate constituent is locked to a housing by the locking piece.
[0014]
By forming the lighting device in this manner, adjacent reflective plate constituents can be held by one locking piece (or one row of locking pieces), thereby reducing the quantity thereof.
[0015]
Furthermore, in addition, the present invention provides a lighting device wherein the locking piece has a locking part for locking the reflective plate constituent to the housing and a supporting part for supporting the light source.
[0016]
By forming the lighting device in this manner, it is possible to combine the function of holding the light source with the locking piece, so there is no need to provide new parts.
[0017]
The lighting device described above may be applied to a backlight device equipped with a diffusion plate or a light guide plate that diffuses light emitted from the light source into a planar uniform light and emits such from a radiation surface.
[0018]
According to such a backlight device, uneven brightness due to bending or warping of the reflective plate does not occur even when a temperature increases due to long-term operation or the like, and thus uniform light can be emitted from the radiation surface of the reflective plate.
[0019]
In addition, when the liquid crystal display device is equipped with a liquid crystal panel disposed opposite to the radiation surface of the backlight device, even when the temperature increases due to long hours of operation or the like, the device can maintain a uniform emission on a screen, resulting in a high-quality display without uneven brightness.
[0020]
(Embodiment 1)

Embodiment 1 of the present invention will be described with reference to the drawings. FIG. 1 is a perspective view illustrating a lighting device according to embodiment 1, which is one example of the present invention. Furthermore, FIG. 2(a) is an external view of the lighting device illustrated in FIG. 1 as seen from the side where the light source is disposed, and FIG. 2(b) is a cross-sectional view illustrating the lighting device illustrated in FIG. 1 taken along the line A-A in FIG. 2(a). FIG. 3 is a perspective view illustrating the reflective plate used in the lighting device according to the present invention.

[0021]

In FIG. 1, a lighting device 1 is equipped with a housing 2 that maintains a strength of the lighting device 1 at a predetermined value or higher, a light source cover 3 that is mounted on the housing 2 and covers both ends of a light source 4, a light source 4 that is housed within the housing 2 and emits light when energized, a reflective plate constituent 5 that reflects the light emitted from the light source 4 at a high reflectivity, and a locking device 6 that holds the light source 4 and the reflective plate constituent 5 in the housing 2.

[0022]

Describing each component, first, the housing 2 is formed from a material having a predetermined strength, such as aluminum, iron, magnesium alloy, or the like. The shape thereof is such that an upright piece 2-2 that is raised upright at approximately a right angle to a flat plate 2-1 is provided on one of two opposing sides (hereinafter referred to as opposite sides when referring to a pair of opposing sides) of the rectangular flat plate 2-1, while a mounting piece 2-3 (see FIG. 5 or FIG. 6) for mounting a light source cover 3 is provided on another opposite side. Next, a hole 16 (see FIG. 5 or FIG. 6) for mounting the locking device 6, which will be described later, is disposed at a predetermined position on the flat plate 2-1.

[0023]

The light source cover 3 is made of, for example, a material such as resin or aluminum, and has a shape in which upright pieces are erected on both long edges of a rectangular upper surface, and a hole in which the light source 4 may be inserted is provided on one of the upright pieces. In addition, the light source cover 3 is provided as a pair of two on the left and right, and each is mounted to the mounting piece 2-3 of the housing 2 to cover both ends of the light source 4.

[0024]

Furthermore, the light source 4 includes a plurality of fluorescent tubes disposed at equal distances apart and facing the flat plate 2-1, and emits light by applying a predetermined electric power. Note that, in the present embodiment, a fluorescent tube is described, but this is merely one example, and the fluorescent tube may also be another light-emitting element such as an LED (light-emitting diode). Note that, in the present Specification, light source refers to all light-emitting elements, including fluorescent tubes and LEDs.

[0025]

The reflective plate constituent 5 is formed as illustrated in FIG. 3, and for example, a synthetic resin material such as PET (polyethylene terephthalate) is used, which is molded into a rectangular flat plate by mixing with a high reflectivity material. A plurality of this reflective plate constituent 5 is lined up to form the reflective plate.

[0026]

Furthermore, the reflective plate constituents 5 are disposed and locked on the flat plate 2-1 having a gap 10 of a predetermined distance. The gap 10 referred to here is selected to be a distance at which adjoining reflective plate constituents 5 do not come into contact at a temperature that is presumed to be reached by the reflective plate constituents 5 when the lighting device 1 continuously operates the light source 4.

[0027]

Furthermore, a hole 11 for passing through the locking device 6, which is described later, is provided in a vicinity of an edge 19 (hereinafter referred to as adjacent edge 19) that is adjacent to an adjoining reflective plate constituent 5 of the reflective plate constituent 5. A diameter of the hole 11 is formed to be larger than a diameter of a neck part 14-2 of a locking part 14 of the locking device 6 (described later with reference to FIGS. 4 and 5) by a length similar to the length of the gap 10.

[0028]

Furthermore, the disposed position of the hole 11 is such that when the locking device 6 is mounted, an outer circumference of the neck part 14-2 of the locking device 6 is disposed at a position that contacts or is close to the adjacent edge 19 side of the inner circumference of the hole 11. Furthermore, the hole 11 and the hole 11 of an adjacent reflective plate constituent 5 are disposed in a so-called staggered pattern. By disposing the holes 11 in such a staggered pattern, it is easy to secure a large area for locking when the reflective plate constituent 5 is locked by the locking device 6, allowing for favorable locking of the reflective plate.

[0029]

The locking device 6 is formed as illustrated in FIG. 4. In FIG. 4, (a) illustrates a perspective view of the locking device 6; (b) illustrates a schematic front view of the locking device 6; and (c) illustrates a schematic side view of the locking

device 6.
[0030]
The locking device 6 is composed of a supporting part 13 for supporting the light source 4, a locking part 14 for locking the locking device 6 to the housing 2, and a base 20 on which the supporting part 13 and the locking part 14 are mounted. In addition, the base 20 is provided with pairs of both the supporting part 13 and the locking part 14, wherein one and the other of the supporting part 13 support separate light sources 4, respectively, and one and the other of the locking part 14 lock separate reflective plate constituents 5, respectively. Furthermore, the locking part 14 is configured such that a head part 14-1 having a diameter larger than that of a hole 16 is disposed on a side far from the base 20, and a neck part 14-2 having a diameter smaller than that of the hole 16 is disposed on a side closer to the base 20.
[0031]
In this way, by giving the locking device 6 both the function of locking the reflective plate constituent 5 and the function of supporting the light source 4, there is no need to provide new locking members or supporting members. Furthermore, by providing a plurality of supporting parts 13 or locking parts 14 in a single locking device 6, it is possible to lock a plurality of light sources 4 or reflective plate constituents 5 using a single locking device 6. Therefore, even when the reflective plate constituent 5 is divided, the number of parts less readily increases, and the attenuation of light by the locking device 6 is also suppressed to a minimal level, resulting in favorable performance.
[0032]
Next, an operation of locking the reflective plate constituent 5 to the housing 2 using the locking device 6 will be explained with reference to FIG. 5 and FIG. 6. FIG. 5 and FIG. 6 are explanatory diagrams illustrating how the reflective plate constituent 5 is mounted on the housing 2 using the locking device 6.
[0033]
First, the reflective plate constituent 5 is disposed opposite to the flat plate 2-1 of the housing 2, and the hole 16 of the housing 2 and the hole 11 of the reflective plate constituent 5 are aligned. Next, the locking part 14 of the locking device 6 is inserted through the hole 11 and the hole 16 as illustrated by the arrow in FIG. 5. At this time, the locking device 6 is disposed straddling both adjacent edges 19 of adjacent reflective plate constituents 5. By forming in this manner, it is possible to lock a plurality of reflective plate constituents using a single locking device, thereby reducing the number of locking devices 6.
[0034]
Furthermore, as a result of disposing as described above, the reflective plate constituent 5 can be locked into the housing 2 by sandwiching it between the base 20 and the flat plate 2-1, a gap corresponding to the amount of expansion when the reflective plate constituent 5 thermally expands is simultaneously created between the neck part 14-2 and the hole 11, and furthermore, each reflective plate constituent 5 is disposed having a gap between itself and an adjacent reflective plate constituent 5 similar to the amount of expansion when the reflective plate constituent expands.
[0035]
In this way, the reflective plate constituent 5 is locked to the housing 2 using the locking device 6. Next, by disposing the light source 4 and the light source cover 3 in their respective predetermined positions, a lighting device as illustrated in FIG. 1 can be formed.
[0036]
Next, a case will be described wherein the light source 4 of the lighting device 1 is continuously lit as described above. The light source 4 of the lighting device 1 gradually increases in temperature by means of continuous lighting. At this time, the reflective plate constituent 5 begins to gradually expand under the influence of the temperature increase.
[0037]
As the reflective plate constituent 5 expands, the gap 10 gradually narrows, and a distance between the outer circumference of the neck part 14-2 of the locking device 6 and the adjoining adjacent edge 19 side of the inner circumference of the hole 11 becomes narrower. As the temperature rises to a certain extent, a temperature difference with the surroundings increases, which enhances cooling capacity; consequently, heat generation of light source 4 reaches equilibrium, and simply operating the light source 4 no longer causes the temperature to rise, keeping the temperature from exceeding a certain value.
[0038]
Therefore, by predicting this temperature increase and providing a gap 10 capable of absorbing the accompanying thermal expansion even when this constant value is reached, adjoining reflective plate constituents 5 do not come into contact with each other, preventing warping or bending of the reflective plate constituent 5.
[0039]
The embodiment 1 described above may undergo various modifications. As relating to modified examples thereof, only modified portions will be described. Note that portions other than the modified portions are the same as above, and thus description is omitted.

[0040]
A first modified example adds a modification to the hole 11 of the reflective plate constituent 5, as illustrated in the perspective view of FIG. 7. That is, in embodiment 1, the shape of the hole 11 was a circular hole as described in FIG. 3, but such is not limited thereto and may be substituted by, for example, providing a notch 12 that extends from the adjacent edge 19 toward the edge opposite to the adjacent edge 19.
[0041]
However, in this case, it is necessary to form the notch 12 such that the neck part 14-2 of the locking device 6 does not come into contact with the end of the side opposite to the adjacent edge 19 of the notch 12 even when the temperature increases and the reflective plate constituent 5 expands.
[0042]
By forming as such, warping or bending of the reflective plate constituent 5 caused by contact between the edge of the notch 12 and the neck part 14-2 of the locking device 6 does not occur even when the temperature of the lighting device increases. Therefore, it is possible to achieve effects similar to the example described in embodiment 1.
[0043]
Next, modified example 2 will be described. FIG. 8 is an external view of the lighting device according to modified example 2, as seen from the side where the light source is disposed. In modified example 2, as illustrated in FIG. 8, the disposed state of the locking device 6 is that the locking device 6 is disposed parallel to the direction in which the gap 10 is disposed, instead of being disposed at a predetermined angle with respect to the gap 10 as in embodiment 1. Even when disposed in this way, the locking device 6 can achieve the same effect as described above.
[0044]
Also, modified example 3 will be described. FIG. 9 is an external view of the lighting device of modified example 3, as seen from the side where the light source is disposed. Modified example 3 is that the adjacent edges of the reflective plate constituent are not in a straight line, but are formed in a zigzag shape with rectangular irregularities, as illustrated in FIG. 9. Even when formed in this way, insofar as the gap 10 has a predetermined size, the reflective plate constituent 5b will not come into contact due to thermal expansion even when the temperature increases, thus preventing the occurrence of warping or bending
.
[0045]
Note that in modified examples 2 and 3, it is necessary to appropriately modify the disposed position of the hole 11 in the reflective plate constituent 5, the disposed position of the hole 16 in the housing 2, and the disposed position of the locking part 14 in the locking device 6 in accordance with the modification.
[0046]
(Embodiment 2)
Next, embodiment 2 will be described. In embodiment 2, the disposed state of the reflective plate constituent differs from that in embodiment 1. Therefore, the differences from embodiment 1 will be described using FIG. 10 to FIG. 12, and description of the same reference numerals is omitted where the configuration that is the same.
[0047]
FIG. 10 is a perspective view illustrating the reflective plate constituents 15a and 15b according to embodiment 2, FIG. 11 is a schematic exploded view of the lighting device according to embodiment 2, and in FIG. 12, FIG. 12 (a) is an external view of the lighting device according to embodiment 2 as seen from the light source 4 disposal side, and FIG. 12 (b) illustrates a cross-sectional view of the lighting device according to embodiment 2 cut along line B-B in FIG. 12 (a).
[0048]
The disposed state of the reflective plate constituents 15a and 15b according to embodiment 2 is such that close portions of adjacent edges 19a and 19b of the reflective plate constituent 15a and the adjacent reflective plate constituent 15b are disposed in an overlapping manner. This situation is illustrated in the enlarged view in FIG. 10.
[0049]
In this configuration, a situation when the temperature of the reflective plate constituents 15a and 15b increases will be described. When the temperature increases, such as by continuously operating the light source 4, the reflective plate constituents 15a and 15b both expand and grow larger. Then, a portion 17 where the reflective plate constituents 15a and 15b overlap (hereinafter referred to as the overlapping portion) gradually increases in size.
[0050]
However, the adjacent edge 19a of the reflective plate constituent 15a extends close to the upper surface of the reflective plate constituent 15b, while the adjacent edge 19b of the reflective plate constituent 15b extends close to the lower surface of the reflective plate constituent 15a. Therefore, the adjacent edges 19a and 19b expand to increase the area of the overlapping portion 17 without touching each other. Therefore, stress based on the contact between adjacent edges does not occur, and it is possible to prevent the occurrence of warping and bending.

[0051]
Note that it goes without saying that modifications similar to those described in embodiment 1 can also be made to embodiment 2.
[0052]
(Embodiment 3)
The lighting devices indicated in embodiment 1 and embodiment 2 above are suitable for use as a backlight device that emits planar light of a uniform surface brightness. These backlight devices can be classified into two types: a direct backlight device that disposes the light source directly opposite the light-emitting surface, and a side-edge backlight device that disposes the light source at the edge of the light-emitting surface to guide light to the radiation surface. Therefore, an example using the lighting device of embodiment 1 as a direct backlight device will be described as embodiment 3.
[0053]
FIG. 13 illustrates a cross-sectional view of the direct backlight device 30 according to embodiment 3. The direct backlight device 30 has a rectangular angle 27 disposed on the upright piece 2-2 of the housing 2b, and this angle 27 is used to dispose a diffusion plate 31 that diffuses light emitted from the light source 4. A material mixed into acrylic and having an effect of diffusing light is preferably used as this diffusion plate 31. By disposing the diffusion plate 31, light emitted from the light source 4 is diffused when passing through the diffusion plate 31, and light radiating from the radiation surface 31b becomes planar and uniform.
[0054]
A case when the temperature of such a direct backlight device 30 increases will be described. When the temperature of the direct backlight device 30 increases due to prolonged operation of the light source 4, the reflective plate constituent 5 gradually expands, and the gap 10 narrows. However, the gap 10 has a width that prevents the reflective plate constituents 5 from coming into contact with each other even when the temperature increases, and thus warping or bending of the reflective plate constituents 5 does not occur.
[0055]
It is desirable for the backlight device 30 to emit substantially uniform light from the radiation surface 31b, but when warping or bending occurs in the reflective plate constituent 5, areas where warping or bending occurs will reflect light in a direction different from the desired direction, resulting in the radiation surface 31b not having planar light emission of a uniform brightness, causing uneven brightness.
[0056]
However, according to the present embodiment, warping or bending does not occur in the reflective plate constituent 5 even when the temperature increases as described above, and thus uneven brightness does not occur regardless of the temperature increase, and a desirable light emission state can be maintained.
[0057]
(Embodiment 4)
Next, a case in which a reflective plate constituent 5 similar to that of embodiment 1 is used in a side-edge backlight device 40 will be described as embodiment 4.
[0058]
FIG. 14 illustrates a front view of the side-edge backlight device 40 according to embodiment 4, and FIG. 15 illustrates a cross-sectional view when the side-edge backlight device 40 is cut along line C-C in FIG. 14.
[0059]
The housing 2c of the side-edge backlight device 40 is provided with upright pieces 2-2 that extend substantially vertically from two opposing sides of the rectangular flat plate 2-1, and further includes extended edges 2-4 that extend from the ends of each upright piece 2-2 toward the opposing sides relative to the flat plate 2-1.
[0060]
The light source 4 is disposed in each of the flat plate 2-1, the upright pieces 2-2, and a recess 43 surrounded by the extended edge 2-4. Note that the light source 4 is the same as that described in embodiment 1.
[0061]
Furthermore, semi-circular reflective members 42 and 42 are disposed around each light source 4, and openings of the reflective members are oriented in the same direction as the opening of the recess 43. A high reflectivity material disposed on the surface facing the light source 4 is used as these reflective members 42 and 42.
[0062]
Then, a light guide plate 41 having the same thickness as the width of the opening, composed of a light-transmitting material such as acrylic, is disposed between the openings of opposing reflective members 42. Note that at this time, the surface of the side opposite to the flat plate 2-1 of the light guide plate 41 serves as the radiation surface 41b.
[0063]

Furthermore, the reflective plate constituent 5 is disposed between the light guide plate 41 and the flat plate 2-1, having a gap 10. This gap 10 is formed such that even when the temperature increases and the reflective plate constituents 5 expand, they do not contact the adjoining reflective plate constituent 5, similarly to the embodiment described above.
[0064]
When the temperature of the side-edge type backlight 40 of such a configuration increases, the guide reflective plate constituent 5 expands, and the gap 10 becomes narrower. However, the gap of 10 is provided in case the temperature increases, and thus the reflective plate constituents 5 do not come into contact with each other. As a result, warping or bending due to temperature increase does not occur in the reflective plate constituents 5, and consequently, uneven brightness does not occur. Furthermore, the light guide plate 41 does not lift up due to warping or bending of the reflective plate constituents 5. Note that this technical concept may also be applied to the reflective member 42.
[0065]
(Embodiment 5)
The backlight devices indicated in embodiment 3 and embodiment 4 are both extremely favorable for use in liquid crystal display devices. First, a case of using the direct backlight device described in embodiment 3 for the liquid crystal display device will be described as embodiment 5 using FIG. 16. Note that for embodiment 5, only points that differ from embodiment 3 will be described, and where the configuration is the same, the reference numerals used in embodiment 1 and embodiment 3 will be used, and description will be omitted
[0066]
FIG. 16 illustrates a cross-sectional view of a liquid crystal display device 35 according to embodiment 5. The liquid crystal display device 35 is formed by disposing an optical sheet 32 facing the radiation surface 31b of the diffusion plate 31, and further disposing a liquid crystal panel 33 on the side opposite to the side where the diffusion plate 31 is disposed on the optical sheet 32.
[0067]
The optical sheet 32 has a function of modulating light emitted from the radiation surface 31b of the diffusion plate 31 to be light required by the liquid crystal panel 33 as incident light. Specific examples of this optical sheet 32 include polarizing sheets, diffusion sheets, and the like.
[0068]
Furthermore, the liquid crystal panel 33 has a configuration including a liquid crystal layer between glass substrates, adjusts the transmittance for each pixel by adjusting the voltage applied to the liquid crystal layer, and displays a desired image. Specifically, for example, a thin-film transistor (TFT) type is used as the liquid crystal panel 33.
[0069]
The liquid crystal display device 35 provided with the above configuration supplies power to the light source 4 to emit light and illuminates the liquid crystal panel 33, while changing the gradation values of each pixel of the liquid crystal panel 33 to desired gradation values to display the desired image.
[0070]
When this liquid crystal display device 35 is operated for a long time, the temperature of the liquid crystal display device 35 gradually increases. At this time, the reflective plate constituent 5 provided with the liquid crystal display device 35 also increases in temperature, but due to being provided with the gap 10, the adjoining reflective plate constituents 5 do not come into contact with each other.
[0071]
Therefore, the reflective plate constituents 5 do not undergo warping or bending, and light emitted from the radiation surface of the diffusion plate 31 can maintain a uniform planar shape regardless of temperature increase. Thus, no uneven brightness occurs on the screen of the liquid crystal panel 33, enabling an image of very high quality.
[0072]
(Embodiment 6)
A case when using the side-edge backlight device illustrated in embodiment 4 for the liquid crystal display device will be described as embodiment 6 using FIG. 17. Note that for embodiment 6, only points that differ from embodiment 4 will be described, and where the configuration is the same, the reference numerals used in embodiment 1, embodiment 4, and embodiment 5 will be used, and description will be omitted.
[0073]
FIG. 17 illustrates a cross-sectional view of a liquid crystal display device 45 according to embodiment 6. The liquid crystal display device 45 is formed by disposing the optical sheet 32 facing a radiation surface 41b of a light guide plate 41, and further disposing a liquid crystal panel 33 on the side opposite to the side where the diffusion plate 31 is disposed on the optical sheet 32.
[0074]
The liquid crystal display device 45 provided with the above configuration supplies power to the light source 4 to emit

light and illuminates the liquid crystal panel 33, while changing the gradation values of each pixel of the liquid crystal panel 33 to desired gradation values to display the desired image.
[0075]
When this liquid crystal display device 45 is operated for a long time, the temperature of the liquid crystal display device 45 gradually increases. At this time, the reflective plate constituent 5 provided with the liquid crystal display device 45 also increases in temperature, but due to being provided with the gap 10, the adjoining reflective plate constituents 5 do not come into contact with each other.
[0076]
Therefore, the reflective plate constituents 5 do not undergo warping or bending, and light emitted from the radiation surface of the diffusion plate 31 can maintain a uniform planar shape regardless of temperature increase. Thus, no uneven brightness occurs on the screen of the liquid crystal panel 33, enabling an image of very high quality.
[0077]
[Effect of Invention]
As described above, according to the lighting device of the present invention, the reflective plate constituents do not come into contact with each other even when the temperature of the lighting device increases. Therefore, warping or bending of the reflective plate does not occur.
[0078]
According to the backlight device of the present invention, even when the temperature of the backlight device increases, the reflective plate constituents provided inside do not come into contact with each other. Therefore, it is possible to obtain a backlight device that does not undergo warping or bending of the reflective plate and provides uniform emission without uneven brightness even when the temperature increases.
[0079]
Moreover, according to the liquid crystal display device of the present invention, even when the temperature of the liquid crystal display device increases, the reflective plate constituents provided inside do not come into contact with each other. Therefore, it is possible to create a liquid crystal display device having high image quality that does not undergo warping or bending of the reflective plate, and does not have uneven brightness on the screen even when the temperature increases.
[Brief Description of Drawings]
[FIG. 1] A perspective view illustrating the lighting device according to embodiment 1, which is one example of the present invention.
[FIG. 2] (a) is an external view of the lighting device of the lighting device illustrated in FIG. 1, as seen from the side where the light source is disposed.
(b) is a cross-sectional view illustrating the case when cut at section A-A in (a).
[FIG. 3] A perspective view illustrating the reflective plate used in the lighting device according to the present invention.
[FIG. 4] (a) is a perspective view of the locking device 6 according to the present invention.
(b) is a schematic front view of the locking device 6 according to the present invention.
(c) is a schematic side view of the locking device 6 according to the present invention.
[FIG. 5] An explanatory diagram illustrating how the reflective plate constituent 5 according to embodiment 1 of the present invention is mounted on the housing 2 using the locking device 6.
[FIG. 6] An explanatory diagram illustrating how the reflective plate constituent 5 according to embodiment 1 of the present invention is mounted on the housing 2 using the locking device 6.
[FIG. 7] A perspective view illustrating a modified example of the reflective plate used in the lighting device according to the present invention, relating to modified example 1.
[FIG. 8] An external view illustrating the lighting device according to modified example 2 of embodiment 1 of the present invention.
[FIG. 9] An external view illustrating the lighting device according to modified example 3 of embodiment 1 of the present invention.
[FIG. 10] A perspective view illustrating the reflective plate constituent according to embodiment 2 of the present invention.
[FIG. 11] A schematic exploded view of the lighting device according to embodiment 2 of the present invention.
[FIG. 12] (a) is an external view of the lighting device according to embodiment 2 of the present invention, as seen from the side where the light source 4 is disposed.
(b) is a cross-sectional view cut along line B-B in (a).
[FIG. 13] A cross-sectional view of the direct backlight device 30 according to embodiment 3 of the present invention.
[FIG. 14] A front view of the side-edge backlight device 40 according to embodiment 4 of the present invention.
[FIG. 15] A cross-sectional view when the side-edge backlight device 40 is cut along line C-C in FIG. 14.

[FIG. 16] A cross-sectional view of the liquid crystal display device 35 according to embodiment 5 of the present invention.
[FIG. 17] A cross-sectional view of the liquid crystal display device 45 according to embodiment 6 of the present invention.
[Description of Reference Numerals]
1 Lighting device
2 Housing
3 Light source cover
4 Light source
5, 15a, 15b Reflective plate constituent
6 Locking device
10 Gap
11 Hole
12 Notch
17 Overlapping portion
19, 19a, 19b Adjacent edge
27 Angle
30 Direct backlight device
31 Diffusion plate
35, 45 Liquid crystal display device
40 Side edge backlight device
41 Light guide plate

[FIG. 1]

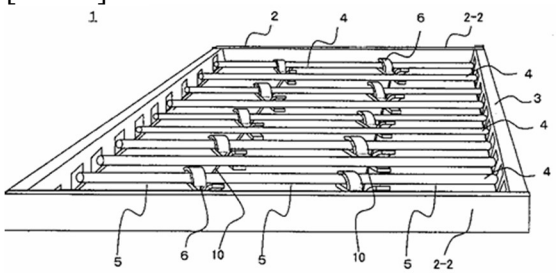

[FIG. 3]

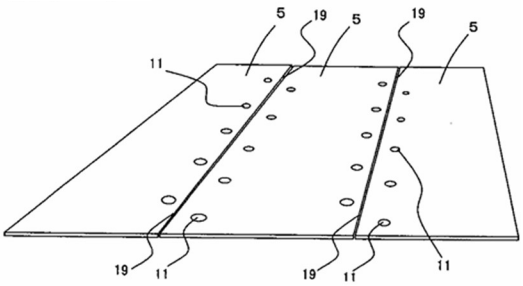

[FIG. 2]

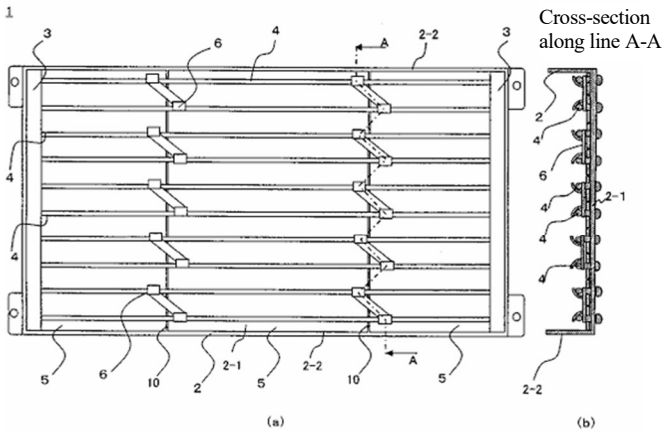

[FIG. 4]

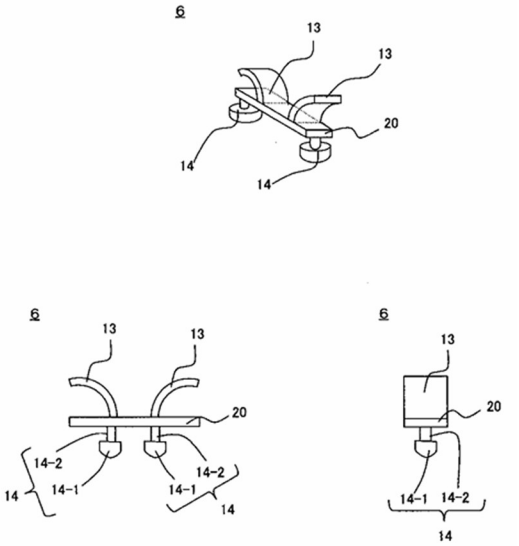

[FIG. 5]

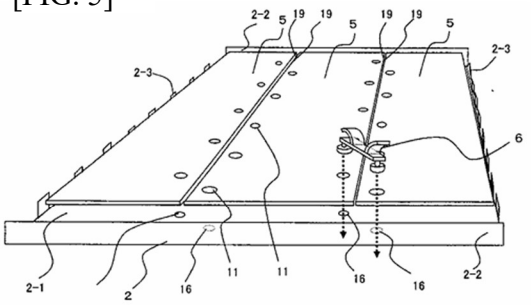

[FIG. 6]

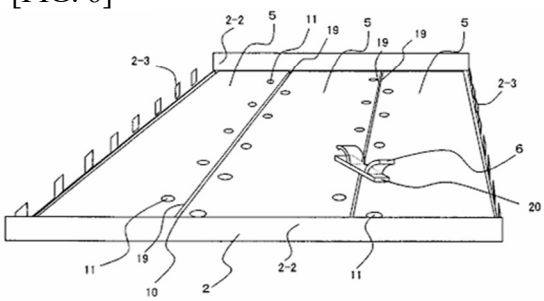

[FIG. 7]

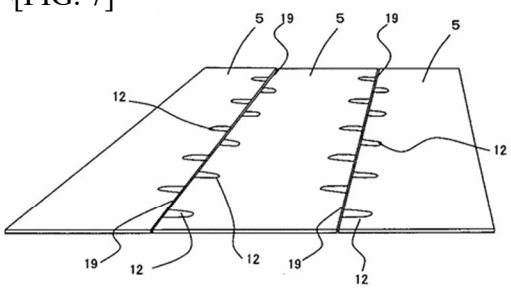

[FIG. 8]

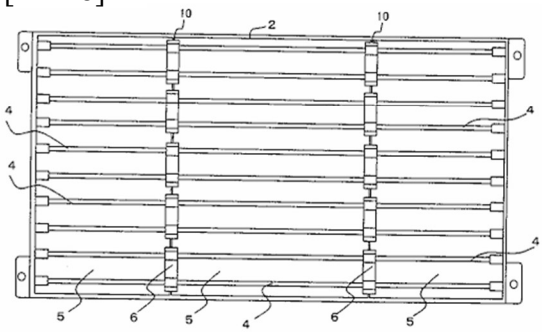

[FIG. 9]

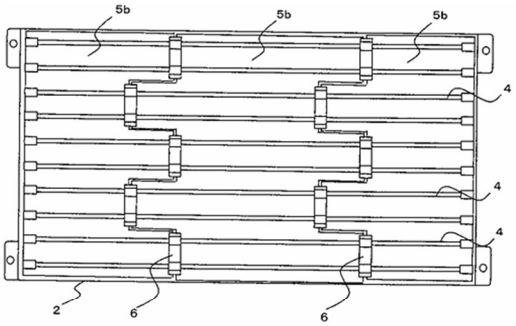

[FIG. 10]

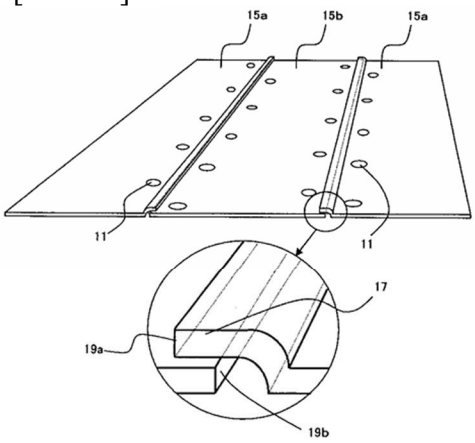

[FIG. 11]

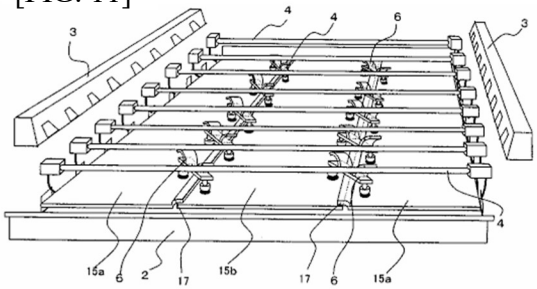

[FIG. 12]

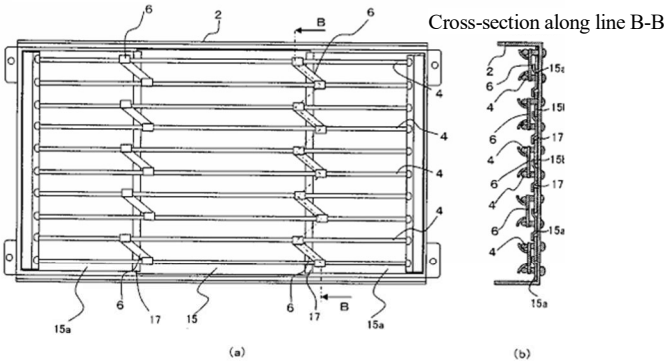

[FIG. 13]

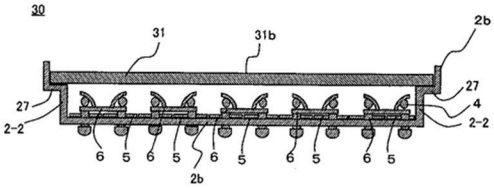

[FIG. 14]

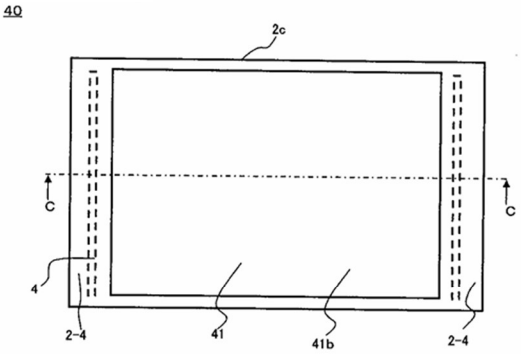

[FIG. 15]

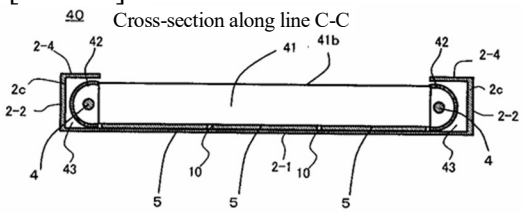

[FIG. 16]

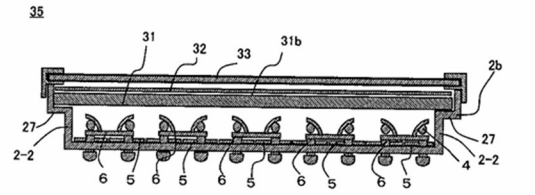

[FIG. 17]

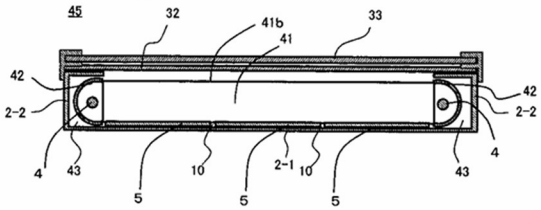

Questel

TRANSLATOR'S CERTIFICATE OF TRANSLATION

Questel-Orbit, Incorporated
2331 Mill Road, Suite 600
Alexandria, VA 22314, U.S.A.
www.questel.com

Questel Project Number: KTS2440023UT-LZ_Q
Date: November 20, 2024

To whom it may concern:

I, Eric Vance, a translator fluent in the Japanese and English languages, on behalf of Questel, do solemnly and sincerely declare that the following is, to the best of my knowledge and belief, a true and correct translation of the documents listed below in a form that best reflects the intention and meaning of the original text.

I hereby declare that all statements made herein of my own knowledge are true and that all statements made on information and belief are believed to be true. I further declare that these statements were made with the knowledge that willful false statements and the like so made are punishable by fine or imprisonment, or both, under Section 1001 of Title 18 of the United States Code.

Original Document Identifier : JP2004139871A pdf
Translated Document Identifier: JP2004139871A _en-US.docx

Signed this 18th day of November, 2024

Signature

Eric Vance

Name