**IN THE UNITED STATES DISTRICT COURT**
**FOR THE NORTHERN DISTRICT OF GEORGIA**
**ATLANTA DIVISION**

| | |
|---|---|
| HISENSE USA CORPORATION,<br><br>Plaintiff,<br><br>v.<br><br>BRIGHTPLUS VENTURES LLC,<br><br>Defendant. | Civil Action No.: 1:22-cv-02774-TCB<br><br>**Jury Trial Demanded** |
| BRIGHTPLUS VENTURES LLC,<br><br>Counter-Claim Plaintiff<br><br>v.<br><br>HISENSE USA CORPORATION, HISENSE CO. LTD., HISENSE INTERNATIONAL (HK) CO. LTD., HISENSE VISUAL TECHNOLOGY CO., LTD., and TVS REGZA CORPORATION,<br><br>Counter-Claim Defendants. | Civil Action No.: 1:22-cv-02774-TCB<br><br>**Jury Trial Demanded** |

**COUNTER-CLAIM PLAINTIFF BRIGHTPLUS VENTURES LLC'S OPENING CLAIM CONSTRUCTION BRIEF**

## TABLE OF CONTENTS

I. INTRODUCTION .....1

II. PERSON OF ORDINARY SKILL IN THE ART (POSITA) .....2

III. LEGAL STANDARD .....2

IV. DISPUTED TERMS.....3

A. "the reflector sheet, the diffuser sheet and brightness enhancement film extend and are arranged parallel to the principal plane of the lighting panel" | "extend … parallel to the principal plane" — U.S. Patent No. 8,294,075 (claim 1).....3

B. "on" — U.S. Patent No. 8,294,075 (claim 1); U.S. Patent No. 9,605,835 (claims 1, 18).....9

C. "configured to conform to a shape of a feature" | protruding "reflector sheet configured to conform to a shape of a protruding feature on the [solid state lighting] tile" — U.S. Patent No. 7,690,812 (claims 1, 15, 18, 21, 23).....10

D. "a first light and a second light" — U.S. Patent No. 8,941,331 (claims 17).....14

E. "a pulse width modulation (PWM) controller that is coupled to the first current supply circuit and the second current supply circuit and that is configured to generate, for each of the first current supply circuit and the second current supply circuit, a first PWM control signal and a second PWM control signal that are supplied to the each of the at least first and second strings" — U.S. Patent No. 8,941,331 (claim 17) .....17

F. "waveguide element" — U.S. Patent No. 7,872,705 (claims 1, 17, 22, 28).....21

G. "light entry regions" — U.S. Patent No. 7,872,705 (claims 1).....26

H. "arranged face-to-face" | "face-to-face" — U.S. Pat. No. RE42,598 (claim 46).....28

I. "congruent to the planar array of LCD devices" — U.S. Pat. No. RE42,598 (claims 46).....31

J. "the plurality of solid metal block bars being connected end-to-end" — U.S. Pat. No. RE45,796 (claim 46) .....35

K. "including mating surfaces therebetween" — U.S. Pat. No. RE45,796 (claim 46).....36

## TABLE OF AUTHORITIES

### Federal Cases

*3M Innovative Props. Co. v. Tredegar Corp.*,
725 F.3d 1315 (Fed. Cir. 2013) ..... 5, 16, 18, 22

*Anchor Wall Sys., Inc. v. Rockwood Retaining Walls, Inc.*,
340 F.3d 1298 (Fed. Cir. 2003) .....15

*Apple, Inc. v. Samsung Elecs. Co.*,
2014 U.S. Dist. LEXIS 8157 (N.D. Cal. Jan. 21, 2014) .....33

*Autogiro Co. of Am. v. United States*,
384 F.2d 391 (Ct. Cl. 1967).....19

*EPOS Techs. Ltd. v. Pegasus Techs. Ltd.*,
766 F.3d 1338 (Fed. Cir. 2014) .....9

*Innova/Pure Water, Inc. v. Safari Water Filtration Sys.*,
381 F.3d 1111 (Fed. Cir. 2004) .....20

*Mentor H/S, Inc. v. Medical Device Alliance, Inc.*,
244 F.3d 1365 (Fed. Cir. 2001) .....3

*Nazomi Communs., Inc. v. ARM Holdings, PLC*,
403 F.3d 1364 (Fed. Cir. 2005) .....16

*Phillips v. AWH Crop.*,
415 F.3d 1303 (Fed. Cir. 2005) ..... 2, 3, 24

*Powerbahn, LLC v. Found. Fitness LLC*,
2018 U.S. Dist. LEXIS 226089 (N.D. Ga. Aug. 27, 2018)..... 19, 20

*SanDisk Corp. v. Kingston Tech. Co.*,
695 F.3d 1348 (Fed. Cir. 2012) .....12

*Springs Window Fashions LP v. Novo Indus., L.P.*,
323 F.3d 989 (Fed. Cir. 2003) .....15

*Tech. Props. Ltd. LLC v. Huawei Techs. Co.*,
849 F.3d 1349 (Fed. Cir. 2017) .....7, 42

*Thorner v. Sony Computer Entm't Am. LLC*,
669 F.3d 1362 (Fed. Cir. 2012) .....3

*Trading Technologies Int'l, Inc. v. Open E Cry, LLC*,
728 F.3d 1309 (Fed. Cir. 2013) .....32

# I. INTRODUCTION

The patents at issue in this action originated from Cree, Inc., a Durham, North Carolina based company that specialized in semiconductors. In the mid-2000's, Cree facilitated the LED lighting revolution due, in part, to its expertise with semiconductor materials that were used in the manufacture of lighting devices. Following Cree's sale of its lighting division to Ideal Industries, Inc., Brightplus Ventures LLC, the Defendant and Counterclaim-Plaintiff in this action, acquired the patents-in-suit. In 2022, after receiving a notice letter from Brightplus, Hisense filed this declaratory judgment action alleging non-infringement of the patents-in-suit.

With the patents-in-suit[1], Cree developed LED backlighting systems for displays. The following is a simplified illustration of an LED-backlit display:

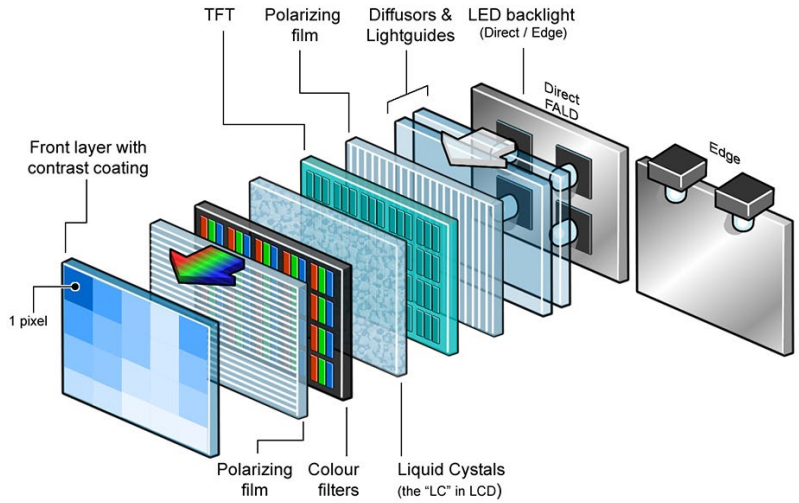


[1] The patents-in-suit are attached as Exhibits 19-27 to the Kheyfits Declaration.

Starting with the rear side of the display panel, a collection of Light Emitting Diodes (LEDs), provide light for the display. Those LED lights can be positioned to emit light directly toward the viewer (direct-lit), or the lights can be positioned around the edge of the display (edge-lit). Several layers are positioned between the LED lights and the viewer to perform various functions, such as light diffusion, brightness enhancement, and reflection. The patents-in-suit cover various aspects of the backlighting structures, as well as associated electronic systems.

## II. PERSON OF ORDINARY SKILL IN THE ART (POSITA)

Brightplus submits that a person of ordinary skill in the art at the time of the inventions of the patents-in-suit would possess the following qualifications: (a) a Bachelor of Science degree in a technical field and at least four years of experience in the field of design and/or manufacture of display systems; (b) a Master of Science degree in a technical field and at least two years of experience in the field of design and/or manufacture of display systems; or (c) a PhD in a technical field relating to the design and/or manufacture of display systems.

## III. LEGAL STANDARD

"It is a 'bedrock principle' of patent law that 'the claims of a patent define the invention to which the patentee is entitled the right to exclude.'" *Phillips v. AWH Corp.*, 415 F.3d 1303, 1312 (Fed. Cir. 2005) (en banc). The terms in a claim "are generally given their ordinary and customary meaning," which is "the

meaning that the term would have to a person of ordinary skill in the art . . . at the time of the invention." *Id.* at 1312-13. In certain cases, Courts are not required to supply a construction differing from the language of the term itself. The Court may simply state that the plain meaning of the term applies. *Mentor H/S, Inc. v. Medical Device Alliance, Inc.*, 244 F.3d 1365, 1380 (Fed. Cir. 2001).

"[A]lthough the specification [of the patent] often describes very specific embodiments of the invention, [the Federal Circuit has] repeatedly warned against confining the claims to those embodiments." *Phillips* at 415 F.3d at 1334. Limitations from the specification should not be read into the claims unless (1) the patentee clearly set forth a definition of the disputed claim term other than its plain and ordinary meaning or (2) included in the specification expressions of manifest exclusion or restriction, representing a clear disavowal of claim scope. *Thorner v. Sony Computer Entm't Am. LLC*, 669 F.3d 1362, 1366 (Fed. Cir. 2012).

## IV. DISPUTED TERMS

### A. "the reflector sheet, the diffuser sheet and brightness enhancement film extend and are arranged parallel to the principal plane of the lighting panel" | "extend … parallel to the principal plane" — U.S. Patent No. 8,294,075 (claim 1)

| Brightplus's Proposed Construction | Hisense's Proposed Construction |
|---|---|
| Plain and ordinary meaning.<br>In the alternative, "the reflector sheet, the diffuser sheet and brightness enhancement film are positioned parallel to the main display plane of the lighting panel" | the entirety of each of the reflector sheet, diffuser sheet, and brightness enhancement film is not generally curved, and the entirety of each is parallel to the principal plane of the lighting panel |

Brightplus submits that this term has its plain and ordinary meaning, and no further construction is required. In the alternative, Brightplus proposes to construe this term to mean "the reflector sheet, the diffuser sheet and brightness enhancement film are positioned parallel to the main display plane of the lighting panel." It appears that Hisense does not dispute the meaning of "reflector sheet," "diffuser sheet," "brightness enhancement film," or "the principal plane of the lighting panel" because it uses these very phrases as part of its proposed construction. The dispute thus relates to (1) whether the "reflector sheet," "diffuser sheet," and "rightness enhancement films" are limited to be "not generally curved," and (2) whether the "entirety of each" must be parallel to the principal plane of the lighting panel."

The first aspect of Hisense's proposed construction—requiring the reflector sheet, the diffuser sheet, and the brightness enhancement film to be "not generally curved"—is not found in the specification. Not only is this limitation absent from the specification, but it is also vague because it contains the word "generally." A construction containing the phrase "not generally curved" would not assist the jury in determining whether a given "diffuser sheet," for example, in the accused products or the prior art, falls within the scope of the claim.

The prosecution history of the '075 Patent also does not require the "not generally curved" limitation to be part of the construction. Brightplus expects

Hisense to argue that this "not generally curved" limitation is a result of the applicant's own statement during prosecution. But as the Federal Circuit held in multiple cases, disavowal of claim scope must be "clear and unmistakable" for prosecution disclaimer to attach, which is not the case here. *3M Innovative Props. Co. v. Tredegar Corp.*, 725 F.3d 1315, 1325 (Fed. Cir. 2013).

Turning to the prosecution history, as originally filed, claim 1 did not contain the present limitation. Claim 6 recited "[t]he lighting panel of Claim 1, further comprising a diffuser sheet between the reflector sheet and the brightness enhancement film." The Examiner rejected claims 1 and 6 as being anticipated by U.S. Pub. No. 2006/0083023 by Ayebe et al. ("Ayebe"). The entirety of the Examiner's discussion of claim 6 is reproduced below:

> Regarding claim 6, Ayabe *(figures 2 and 11)* discloses a lighting panel, further comprising a diffuser sheet (16) between the reflector sheet (18/57) and the brightness enhancement film (17/53).

Ex. 1, '075 File History, February 17, 2011 Office Action at 7.

In response, the applicant amended claim 1 to recite "a diffuser sheet between the reflector sheet and the brightness enhancement film, the reflector sheet, the diffuser sheet and brightness enhancement film extend and are arranged parallel to the principal plane of the lighting panel" (the present claim limitation, which includes the language of original claim 6) and made the following argument to distinguish claim 1 from Ayabe:

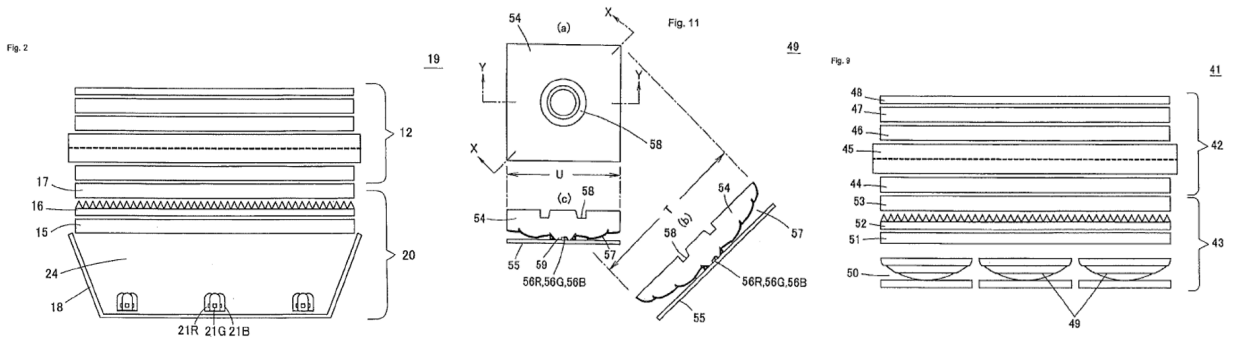


> Applicant submits that the reflective elements 18/57 are generally curved and do not satisfy the recitation that "the reflector sheet, the diffuser sheet and brightness enhancement film extend and are arranged parallel to the principal plane of the lighting panel" and that "the reflector sheet is arranged between the at least one substrate and the brightness enhancement film." Although the reflective element 57 is arguably between the elements 55 and 53 (identified in the Action as analogous to the substrate and brightness enhancing film, respectively), the curved reflective element 57 of the configuration in Figures 9 and 11 is clearly not arranged parallel to the principal plane of the lighting panel. Figure 2 does not even illustrate a substrate, and as such cannot satisfy the recitation that the reflector sheet is arranged between the at least one substrate and the brightness enhancement film.

Ex. 2, '075 File History, May 17, 2011 Amendment, pp. 11-12 (rearranged).

Hisense appears to argue that applicant's amendment and statements create prosecution disclaimer that requires (1) the entirety of each of the reflector sheet, diffuser sheet, and brightness enhancement film to not be generally curved, and (2) the entirety of each to be parallel to the principal plane of the lighting panel.

The above statement is not "clear and unmistakable" disavowal required by the Federal Circuit precedent for narrowing claim scope, especially in the way

proposed by Hisense. Statements by the applicant that are either "ambiguous or amenable to multiple reasonable interpretations" do not create a disclaimer. *Tech. Props. Ltd. LLC v. Huawei Techs. Co.*, 849 F.3d 1349, 1358 (Fed. Cir. 2017). And this is precisely the situation here. Specifically, there are at least two aspects of the statement "that [Ayabe's] reflective elements 18/57 are generally curved . . ." that are ambiguous. First—the one that Hisense is likely to latch on—is that Ayabe's reflective elements 18/57 are "generally curved," therefore necessitating the interpretation where the claimed "reflector sheet" is not generally curved. But even considering this first aspect, the phrase is ambiguous because of the qualifier "generally." In other words, Hisense's proposal not only relies on the ambiguous statement, but also carries this ambiguity into the construction itself. The construction would not be helpful to the jury because it does not answer the question what curvature the reflector sheet, for example, still fits the claim scope.

Equally as important is the second aspect of the above prosecution-history statement, namely the distinction between the claimed "reflector <u>sheet</u>" on the one hand and "reflecting <u>member</u> 57" or "reflective <u>film</u> 18"—to which the applicant referred to collectively as "reflective elements 18/57"—on the other hand. Applicant then stated that "[Ayabe's] reflective elements 18/57" do not satisfy the recitation that "the reflector sheet . . ." (underscoring the difference between member/film v. sheet) and also underscoring the arrangement of the reflector sheet

with respect to other elements that "the reflector sheet is arranged between the at least one substrate and the brightness enhancement film."

Turning to "the entirety of each [the reflector sheet, diffuser sheet, and brightness enhancement film] being parallel to the principal plane of the lighting panel," proposed by Hisense, neither the specification nor the file history supports the inclusion of this limitation into the construction. The only possible support for this portion of Hisense's proposed construction are the figures in the patent that show the three elements being parallel to the principal plane to the extent depicted. But adopting this portion of Hisense's proposed construction would be improper for at least two reasons. First, importing a limitation from an embodiment is improper. *EPOS Techs. Ltd. v. Pegasus Techs. Ltd.*, 766 F.3d 1338, 1344 (Fed. Cir. 2014). Second, the figures do not show the entirety of the lighting panel, but only portions of the lighting panel for illustration. It is apparent that the figures that show the "entirety" of the three elements being parallel to the principal plane provide only an illustrative portion. For example, the '075 Patent discusses the lighting panel having "36 LED strings" (col. 14:23-29) and "having dimensions of 18″×25″ has a total area of 450 square inches" (col. 13:1-5). Moreover, these figures do not show the LCD panel, electronic components, or casing. While for the *depicted* portion, the three elements are parallel to the principal plane in their entirety this may not be true for the entire lighting panel.

### B. **“on” — U.S. Patent No. 8,294,075 (claim 1); U.S. Patent No. 9,605,835 (claims 1, 18)**

| Brightplus’s Construction | Hisense’s Construction |
|---|---|
| “directly on, or on with intervening elements present” | directly on the other element or intervening elements may be present |

The parties seem to agree that the specification of ’075 Patent (and its continuation ’835 Patent with the identical specification) provides the definition of the term “on”:

> It will be understood that when an element such as a layer, region or substrate is referred to as being “on” or extending “onto” another element, it can be directly on or extend directly onto the other element or intervening elements may also be present.

’075 Pat., col. 6:47-51. The disagreement between the parties appears to be of form, rather than substance.

Brightplus’s construction fits better into the claim language and therefore would be of greater assistance to the jury. Consider for example the following limitation from claim 1 of the ’075 Patent:

> “a reflector sheet <u>on</u> the first side of the at least one substrate”

Substituting Hisense’s proposed construction results in the following:

> “a reflector sheet <u>directly on the other element or intervening elements may be present</u> the first side of the at least one substrate.

This substitution demonstrates the problem with Hisense’s formulation. <u>First</u>, when Hisense’s proposed construction is substituted into the claim, the claim no

longer makes sense. Second, the phrase "the other element" does not have an antecedent basis, leaving the jury guessing whether "a reflector sheet" should be on some unknown "other element" or on . . . "the first side of the at least one substrate." Third, "or intervening elements may be present" is not tied to the word "on" in the construction, making it imprecise as to whether intervening elements may be present, but removed from the two elements, one being on the other one—in this case "a reflector sheet" and "the first side of the at least one substrate."

Brightplus's proposed construction, on the other hand, does not suffer from these deficiencies. Carrying out the substitution of Brightplus's proposed construction into the same claim element results in the following:

> a reflector sheet directly on, or on with intervening elements present the first side of the at least one substrate

The substitution results in a grammatically sound phrase. Moreover, the substitution of Brightplus's construction does not result in any words lacking antecedent basis. Finally, Brightplus's construction still makes clear that "a reflector sheet" is on "the first side of the at least one substrate," (directly or with intervening elements present).

### C. "configured to conform to a shape of a feature" | protruding "reflector sheet configured to conform to a shape of a protruding feature on the [solid state lighting] tile" — U.S. Patent No. 7,690,812 (claims 1, 15, 18, 21, 23)

| Brightplus's Construction | Hisense's Construction |
|---|---|
| Plain and ordinary meaning. | the reflector sheet overlays |

| | |
|---|---|
| In the alternative, "reflector sheet that provides cover and relief for a shape of a protruding feature on the [solid state lighting] tile" | (e.g., by deformation), and has the same shape, outline, or contour of a protruding feature |

The main dispute between the parties is whether the word "conform" in the claims *must* mean "the same" or "identical" shape of a protruding feature as Hisense contends, or whether the term is not so limited. Since both the intrinsic and extrinsic evidence demonstrates that "conform" allows for similarity, rather than strict identity, Brightplus submits that this term requires no additional construction beyond its plain and ordinary meaning.

First, Hisense's construction contradicts the express language of the claim. While Hisense argues that the reflector sheet "has the same shape, outline, or contour of a protruding feature" the actual language of claim 1 requires conformance "to ***a*** shape of a protruding feature." The claim does not recite "***the***" shape as Hisense's construction requires. As the Federal Circuit has held, "[t]hat 'a' or 'an' can mean 'one or more' is best described as a rule, rather than merely as a presumption or even a convention." *SanDisk Corp. v. Kingston Tech. Co.*, 695 F.3d 1348, 1360 (Fed. Cir. 2012). Since claim 1 expressly contemplates conformance to one of many possible shapes of a protruding feature, Hisense' construction is unduly narrow.

Second, the specification makes clear that there are several ways of achieving "conformance"—including by *not* taking on the exact shape of the

protruding feature. The ’812 patent provides several examples of protruding features, such as “long wire interconnect” or “LWI” 18 in the following excerpts from Figs. 3 and 4:

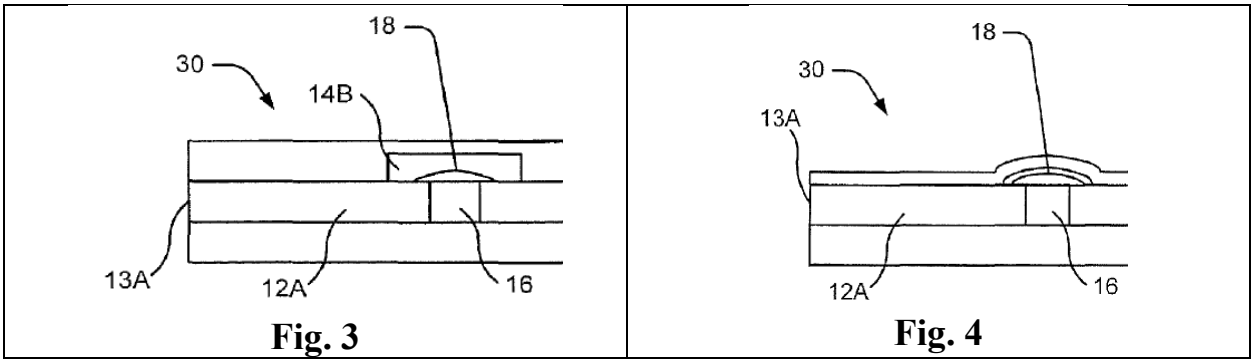


Figure 3 shows a “recess” 14B formed in the reflector “to provide relief for surface protrusions, such as LWI 18.” While Hisense may argue that the specification only mentions “conformance” in connection with Fig. 4, Hisense would be incorrect. The specification itself explains that conformance may be achieved <u>with</u> or without a recess:

> Additionally, the reflector sheet may be configured to conform to protrusions on the surface of the tile substrate. In this manner, recesses <u>may</u> not have to be created or formed in the reflector sheet during manufacturing.

’812 Pat., col. 8:21-24. Thus, the patent expressly contemplates conformance that may or may not be accomplished by a recess in the reflector sheet—contradicting Hisense’s argument that conformance requires the reflector sheet to take on the exact shape of the protruding feature.

<u>Third</u>, Hisense cannot point to any “clear and unambiguous” disavowal of

claim scope in the prosecution history. The only discussion of conformance in the prosecution history was the applicant's explanation that "the apertures cited in the Office Action are not synonymous with a reflector sheet conforming to a shape of a protruding feature." Ex. 3, '331 File History, July 2, 2009 Response to Office Action, p. 9 (emphasis added). As the applicant further explained, "FIGURE 3 illustrates an aperture 14A, which is distinct form conformance to surface protrusions." *Id.* (emphasis added). This file history discussion is entirely consistent with Brightplus's proposed construction. As Fig. 3, reproduced below, shows—aperture 14A is a pure unobstructed opening in reflector sheet 14, while recess 14B is a feature conforming to protrusion 18.

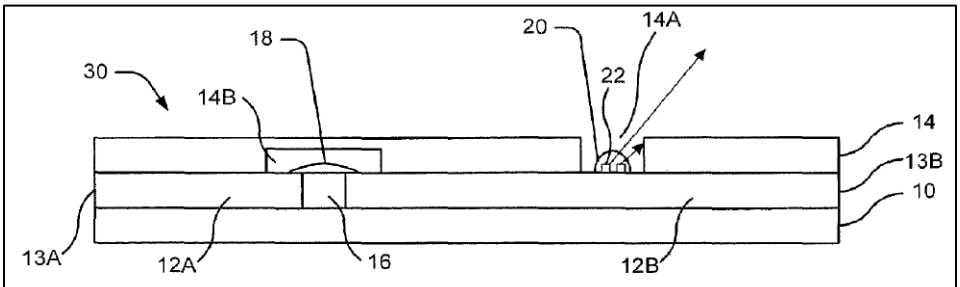

***FIGURE 3***

Indeed, in another response, the applicant reiterated "that, 'a same shape, outline or contour' of a protruding feature would not be an aperture." Ex. 4, '331 File History, October 26, 2009 Request for Reconsideration, p. 6. But there are no statements in the file history stating that the feature labeled as 14B (discussed above) is not conformance. Moreover, extrinsic evidence expressly permits similarity—and does not require conformance to be identical. For example, the

*Webster's New Dictionary* defines "[c]onform" as "to make similar" and "to be or become similar." Ex. 5, BP_CC_00000112. The *Merriam-Webster Dictionary* similarly defines "[c]onform" as "to be similar or identical." Ex. 6, BP_CC_00000066 (emphasis added). Thus, Hisense's construction finds no support in the specification or file history, and the term requires no further construction. To the extent that the Court decides that a construction is warranted, Brightplus submits that the following construction better matches the claims, specification, and file history: "reflector sheet that provides cover and relief for a shape of a protruding feature on the [solid state lighting] tile."

### D. "a first light and a second light" — U.S. Patent No. 8,941,331 (claims 17)

| Brightplus's Construction | Hisense's Construction |
|---|---|
| Plain and ordinary meaning.<br><br>In the alternative, "at least a first string of solid state lighting devices configured to emit a first light, and a second string of solid state lighting devices configured to emit a second light" | First and second light have different wavelengths. |

In this claim term, the words "first" and "second" are used to describe different instances of the same factor—"light"—rather than requiring light having different wavelengths. As the Federal Circuit has explained:

> The use of the terms "first" and "second" is a common patent-law convention to distinguish between repeated instances of an element or limitation. *See, e.g.*, *Anchor Wall Sys., Inc. v. Rockwood Retaining Walls, Inc.*, 340 F.3d 1298, 1304 (Fed. Cir. 2003) ("first and second

> sidewall surfaces"); *Springs Window Fashions LP v. Novo Indus., L.P.*, 323 F.3d 989, 992 (Fed. Cir. 2003) ("first and second opposed ends").

*3M Innovative Props.*, 350 F.3d at 1371. Further, in the '331 patent, where the inventors wanted to attribute a wavelength to "light" they did so. For example, in contrast with claim 17, which simply requires a "first" light and a "second" light, other claims actually assign specific wavelengths to the first and second light. *See* dependent claim 22 (". . . emit the first light that includes a combined light including a dominant wavelength corresponding to a blue color and a dominant wavelength corresponding to a yellow color" and "emit the second light that includes a dominant wavelength corresponding to a red color."). Thus, not only did the inventors demonstrate a desire to *not* require wavelengths as part of claim 17, but "[t]he concept of claim differentiation 'normally means that limitations stated in dependent claims are not to be read into the independent claim from which they depend.'" *Nazomi Communs., Inc. v. ARM Holdings, PLC*, 403 F.3d 1364, 1370 (Fed. Cir. 2005). Accordingly, this claim requires no additional construction.

As significantly, the specification provides examples where the "at least first and second strings of solid state lighting devices" of claim 17 emit light having <u>*the same*</u> wavelength. For example, in one embodiment, "[t]he LED chips 16A-16D may include at least a red LED 16A, a green LED 16B and a blue LED 16C." '331

Pat., col. 7:12-13. Yet, "[t]he lighting element 12 may include an additional green LED 16D in order to make more green light available." *Id.*, col. 7:19-20. Further, "the first green LEDs 16B in the first path 20 may be arranged in series to form a string 20B, while the second green LEDs 16D may be arranged in series to form a separate string 20D." '331 Pat., col. 7:48-51. Thus, the patent expressly discloses "first green [Light Emitting Diodes]" and "second green [Light Emitting Diodes]"—showing that the "first light" and "second light" *can* both be green, *i.e.*, having the same wavelength.

In addition, the file history contains no clear and unambiguous disavowal of claim scope. While the patent examiner issued a rejection arguing that a prior art reference disclosed "at least two of solid state lighting devices that are respectively configured to emit at least a first light (Red) and a second light(green)," there is no indication that the examiner or the applicant viewed the claim as *requiring* different wavelengths. *See* Ex. 7, '331 File History, August 8, 2013 Office Action, p. 5; Ex. 8, '331 File History, November 8, 2013 Response to Office Action, pp. 9-11. In responding to the Office Actions, none of the applicant's arguments were based on color or wavelengths. And "[a]n applicant's silence in response to an examiner's characterization of a claim does not reflect the applicant's clear and unmistakable acquiescence to that characterization if the claim is eventually allowed on grounds unrelated to the examiner's unrebutted characterization." *3M*

*Innovative Props.*, 350 F.3d at 1373-74. In the present case, the applicant made no statements agreeing that the "first" and "second" lights required different wavelengths, and there is no evidence that the *examiner* held that view. That the examiner used light of different color to reject the claim does not mean that different color light was required by the claim.

Thus, the limitations that Hisense attempts to read into this claim element find no support in intrinsic evidence, and the term requires no further construction. To the extent that the Court decides that this term needs a construction, Brightplus submits that the term "at least first and second strings of solid state lighting devices that are respectively configured to emit at least a first light and a second light, respectively" in claim 17 of the '331 patent should be construed as "at least a first string of solid state lighting devices configured to emit a first light, and a second string of solid state lighting devices configured to emit a second light."

### E. "a pulse width modulation (PWM) controller that is coupled to the first current supply circuit and the second current supply circuit and that is configured to generate, for each of the first current supply circuit and the second current supply circuit, a first PWM control signal and a second PWM control signal that are supplied to the each of the at least first and second strings" — U.S. Patent No. 8,941,331 (claim 17)

| Brightplus's Construction | Hisense's Construction |
|---|---|
| Plain and ordinary meaning.<br><br>In the alternative, a "PWM control signal" | A PWM controller generates two PWM signals. The PWM signals are pulse width modulated signals and not frequency modulated. Both PWM signals generated by the PWM controller are supplied to the first string. Both PWM signals generated by the |

| | |
|---|---|
| means a "signal that controls pulse width modulation" | PWM controller are supplied to the second string. The same signal (current or voltage) spaced apart In time are not different signals. |

The meaning of this claim element is clear and requires no construction beyond its plain and ordinary meaning. To the extent the Court decides that any construction is required, Brightplus submits that the sub-term "PWM control signal" be construed as a "signal that controls pulse width modulation." Hisense, however, seeks to introduce five separate constructions for this claim term, none of which match the claim language and cannot be substituted into the claim.

As an initial matter, throughout its constructions, Hisense rewrites the claimed "PWM control signal" as "PWM signal," eliminating the word "control." This approach runs contrary to fundamental claim construction principles:

> Indeed to construe the claims in the manner suggested by [Defendants] would read an express limitation out of the claims. This, we will not do because "[c]ourts can neither broaden nor narrow claims to give the patentee something different than what he has set forth."

*Powerbahn, LLC v. Found. Fitness LLC*, 2018 U.S. Dist. LEXIS 226089, *37 (N.D. Ga. Aug. 27, 2018) (quoting *Autogiro Co. of Am. v. United States*, 384 F.2d 391, 396, 181 Ct. Cl. 55 (Ct. Cl. 1967)). "While not an absolute rule, all claim terms are presumed to have meaning in a claim." *Powerbahn*, 2018 U.S. Dis. LEXIS 226089, *37 (quoting *Innova/Pure Water, Inc. v. Safari Water Filtration Sys.*, 381 F.3d 1111, 1119 (Fed. Cir. 2004)). Although the meaning of this claim

term is clear, the Court can address Hisense's attempted modification of the claim language by construing "PWM control signal" as a "signal that controls pulse width modulation."

With the above in mind, the first Hisense construction states that "[a] PWM controller generates two PWM signals." But the claim requires a PWM controller to generate "PWM control signals"—not simply "PWM signals." And to the extent that Hisense's construction includes a typographical error, and was meant to read "[a] PWM controller generates two PWM control signals"—that limitation is unnecessary since it is already part of the claim:

> a pulse width modulation (PWM) controller that is coupled to the first current supply circuit and the second current supply circuit and that is configured to generate, for each of the first current supply circuit and the second current supply circuit, a first PWM control signal and a second PWM control signal that are supplied to the each of the at least first and second strings.

'331 Pat., claim 17 (underlines added).

The second Hisense construction mandates that "[t]he PWM signals are pulse width modulated signals and not frequency modulated signals." But, as noted above, the claim recites "PWM control signals"—not "PWM signals." Further, while Brightplus generally agrees that a "PWM signal" must be pulse-width modulated, there is no requirement that a "PWM control signal" cannot include frequency modulation. Moreover, the patent discusses adjusting the frequency of PWM signals:

> In some embodiments, the pulse repetition frequency (i.e. pulse repetition rate) of the PWM signal may be in excess of 60 Hz. In particular embodiments, the PWM period may be 5 ms or less, for an overall PWM pulse repetition frequency of 200 Hz or greater.

'331 Pat., col. 13:57-61. Thus, precluding frequency modulation from PWM control signals runs contrary to the specification.

The third and fourth Hisense constructions require that "[b]oth PWM signals generated by the PWM controller are supplied to the first string" and "…to the second string." Brightplus does not dispute that the PWM controller generates two control signals: a "first PWM control signal" and a "second PWM control signal" as recited in claim 17. Brightplus also does not dispute that both the first and second PWM control signals "are supplied to the each of the at least first and second strings"—again, as recited in the claim. However, as noted above, the claim requires the PWM controller to generate "PWM control signals."

Hisense's fifth construction proposes that "[t]he same signal (current or voltage spaced apart in time are not different signals." But, as noted in Section IV.D above, "[t]he use of the terms 'first' and 'second' is a common patent-law convention to distinguish between repeated instances of an element or limitation." *3M Innovative Props. Co.*, 350 F.3d at 1371. Second, Hisense's construction misses the point. While Hisense argues that the same signal spaced apart in time "are not different signals," its construction says nothing about whether the "first

PWM control signal" must be different from a "second PWM control signal."

### F. "waveguide element" — U.S. Patent No. 7,872,705 (claims 1, 17, 22, 28)

| Brightplus's Construction | Hisense's Construction |
|---|---|
| light spreading element | An element designed to confine and direct light to the whole panel using internal reflection. |

The parties dispute the function performed by the "waveguide element" in the '705 patent, and the dispute is reflected in their constructions. Brightplus's construction is entirely consistent with the disclosure of the '705 Patent. Hisense's construction contradicts the '705 Patent. Moreover, the expert declaration (by Dr. Josefowicz) provided in support of Hisense's construction contradicts his own testimony before the International Trade Commission.

The '705 Patent introduces the "waveguide element" as follows:

> A waveguide element is a device utilized to guide optical waves from a light entry region to a transmissive surface or exit region of the waveguide element.

'705 Pat., col. 5:53-55.

Since this introduction does not resolve the parties' dispute, the parties provided their own proposed constructions. Brightplus's proposed construction—"light spreading element"—requires the "waveguide element" to spread light. This is consistent with other portions of the specification that disclose the light-spreading property of the waveguide:

> Backlighting of transmissive LCDs <u>may utilize a waveguide to spread the light to an entire LCD panel</u>,

> with such waveguide having a single entry for light and transmitting the light by internal reflection <u>to be spread over a desired area</u>.

'705 Pat., col. 1:66-2:3.

> With regard to edge illumination, in which <u>a waveguide is used to spread the light emission</u> of a side view LED package disposed on an edge of the LCD, the resulting screen size is limited.

'705 Pat., col. 2:39-42.

Hisense's construction, however, has several deficiencies, as does its expert's declaration. <u>First</u>, the word "designed" would require the jury to determine the state of mind behind creating a given element. A structure may be a "waveguide element" regardless of whether it was *designed* for that purpose.

<u>Second</u>, while the specification, as discussed above, specifically discusses waveguide elements in the context of "spreading" light, Hisense's proposed construction requires "confin[ing] . . . light." And this is why Hisense appears to have retained its expert—to override the statements of the inventors in the specification by expert testimony. Predictably, Dr. Josefowicz states that "[n]o POSITA would ever have considered the term 'waveguide element' to mean 'light spreading element. . .'" Ex. 9, Josefowicz Decl., ¶ 40. But "a court should discount any expert testimony that is clearly at odds with the claim construction mandated by the claims themselves, the written description, and the prosecution history . . ." *Phillips*, 415 F.3d at 318.

Recognizing this contradiction, Dr. Josefowicz states that the recitations of "spreading" in the '075 Patent "do not refer to spreading light as that phrase is used in the field of optics, such as by refraction by a lens, but rather more loosely refers to a waveguide's ability to direct light from one location to another location." Ex. 9, Josefowicz Decl., ¶ 42. Dr. Josefowicz's opinion lacks any support. Essentially, he opines that a waveguide must be interpreted as he says and the inventors just did not know how to use words, so they must have meant something other than the plain and ordinary meaning when they wrote "spread." The more supportable view is that the inventors meant for a waveguide element to spread the light and that concept should be reflected in the construction.

Third, the requirement that the waveguide element directs light using "internal reflection" also contradicts at least one embodiment. For example, the '705 Patent discloses an embodiment where light emitted by a backlight may simply pass through a waveguide:

> In one embodiment, a LCD system may further comprise a light source that is not optically coupled to emit light into the waveguide. An exemplary system includes a light source that directly backlights a LCD panel, supplemented by waveguide-directed light. Light emitted by such a backlight may pass through or around a waveguide or waveguide system disposed between the backlight and the LCD panel, in order to transmit light from the backlight to the LCD panel.

'705 Pat., col. 10:29-37. This passing of light without internal reflection is

apparent in Fig. 6B where the light emitted from the sides of waveguide layer 44B passes (without internal reflection) though layer 44A.

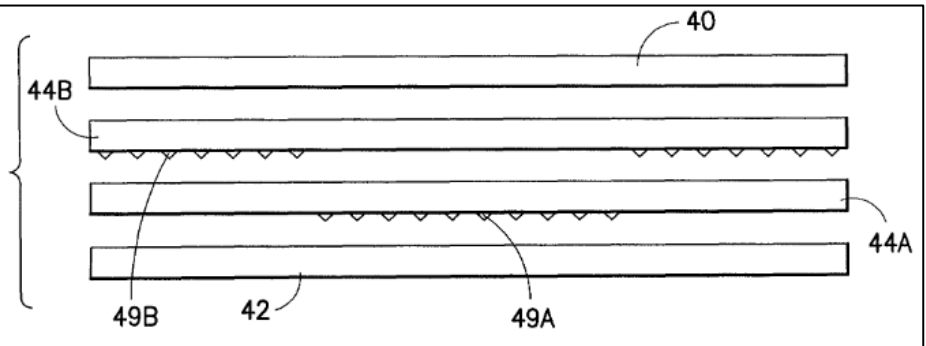

FIG.6B

In addition to the opinions refuted above, Dr. Josefowicz offers an untimely non-infringement opinion which directly contradicts statements that he made in another tribunal. He states that Brightplus "may be attempting to capture a 'lens,' also taught by the patent, within the scope of the 'waveguide element' term." Ex. 9, Josefowicz Decl., ¶ 43. He continues: "A lens does not confine or direct light rays within its core, nor is there total internal reflection. There is only refraction." *Id*., ¶ 44. But this is not what he said in *In the Matter of*: *Certain Light-Emitting Diode Products, Fixtures, and Components Thereof*, 337-TA-1213 ("ITC Case"). In the ITC case, Dr. Josefowicz offered testimony and presented demonstrative slides (Ex. 10). Dr. Josefowicz showed slide 7 containing the following figure and confirmed that a lens was depicted (Ex. 11, ITC Case Hearing Tr. 915:22-916:2).

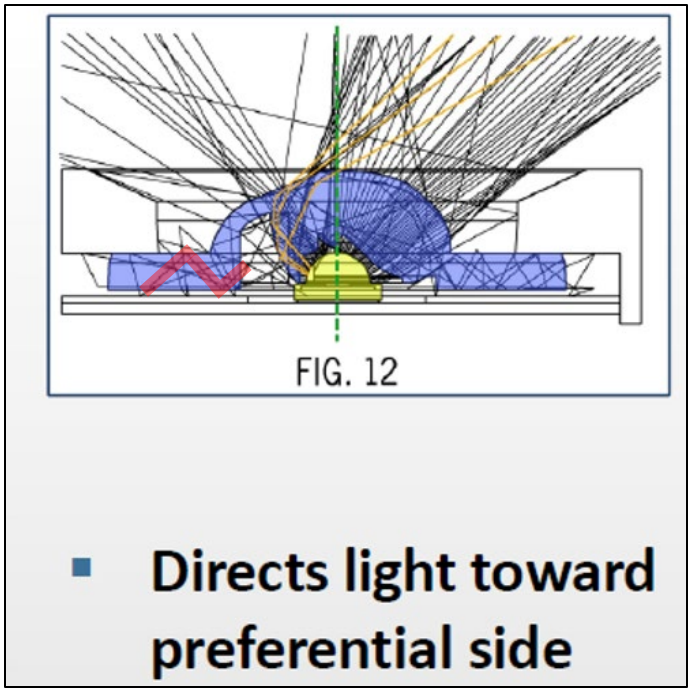


Ex. 10, ITC Case Josefowicz's demonstratives, excerpt from slide 7 (traces in red added). And this lens in Dr. Josefowicz's words "directs light," but in his declaration in support of Hisense's construction, Dr. Josefowicz states that "[a] lens does not . . . direct light." Ex. 9, Josefowicz Decl., ¶ 44.

Examining the figure on this slide 7 from the ITC case closer, it is apparent that Jr. Josefowicz believes that a lens *can* have internal reflection. Dr. Josefowicz's demonstrative illustrates a lens conducting light using internal reflection. *See* red traces in the above picture. And later in his ITC Case testimony, discussing another lens depicted in slides 13-14 of his demonstratives, Dr. Josefowicz stated "And likely, that surface [of the lens] would be at an angle that would cause total internal reflection." Ex. 12, ITC Case Hearing Tr., 1008:20-21. But here, in this case, Dr. Josefowicz opines, with respect to a lens that "nor is

there total internal reflection." Ex. 9, Josefowicz Decl., ¶ 44.

These directly contradictory opinions cast a significant doubt on Dr. Josefowicz's credibility, and his declaration, if not totally disregarded, should be afforded little weight.

### G. "light entry regions" — U.S. Patent No. 7,872,705 (claims 1)

| Brightplus's Construction | Hisense's Construction |
|---|---|
| "regions for receiving light" | openings in a physical device that allow light to enter the device so that it can be guided (confined and directed by reflection) |

Brightplus's proposed construction of "light entry regions" as "regions for receiving light" is consistent with the specification, which provides:

> Embodiments of the present invention include single waveguides having multiple light entry regions for receiving light from locations other than, and/or in addition to, a single edge of the waveguide.

'705 Pat., col. 5:19-22. The specification makes clear that "light entry regions" are "for receiving light." Neither the specification nor the file history provides any contrary definition and this construction should be adopted.

Hisense's construction includes two aspects. First, "opening in a physical device that allow light to enter the device" and second, "so that [light] can be guided (confined and directed by reflection). With respect to first aspect of Hisense's construction, the requirement that light entry regions be "openings in a physical device that allow light to enter the device," implies the waveguide element having an aperture or gap, which is not supported by the specification or

the file history. None of the illustrations of a waveguide in the ’705 patent depict an opening. In fact, all figures demonstrate waveguides having light entry regions that are not openings.

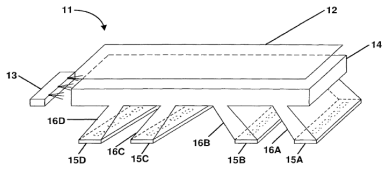


FIG.2

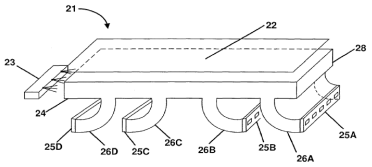


FIG.3

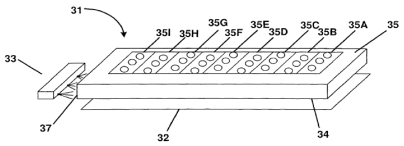


FIG.4

As to small rectangles on 15A, 15B, 15C, 15D in Fig. 2, on 25A and 25B in Fig. 3 and circles on 35A-35I in Fig. 4, they belong to light sources that are coupled to the respective waveguides (*See* ’705 Pat. col. 12:51-13:16[2]).

Likewise, there is no disclosure of a waveguide having an opening. Indeed, the specification does not mention “opening” at all. Accordingly, requiring “light entry regions” to be “openings” would exclude all embodiments of the invention from the claim scope, which cannot be the right construction.

The second aspect is the repetition of the waveguide definition from section IV.F above. But substituting Hisense’s proposed constructions for “waveguide element” and “light entry regions” into the claim term “at least one waveguide element comprising a plurality of light entry regions” results in the following:

> at least one an element designed to **confine and direct light** to the whole panel using internal reflection comprising a plurality of openings in a physical device

[2] Note that reference to “34A-34I” in the patent is a typographical error and should be read as “35A-35I.”

that allow light to enter the device **so that it can be guided (confined and directed by reflection)**

Even if this second aspect could be technically correct (it is not), it is unnecessary because it is just a "second bite" at the same apple. If the Court agrees with Hisense as to the "waveguide element" then this aspect would be reflected in *that* construction, and if not, there is no reason to introduce it through another term.

### H. "arranged face-to-face" | "face-to-face" — U.S. Pat. No. RE42,598 (claim 46)

| Brightplus's Construction | Hisense's Construction |
|---|---|
| Plain and ordinary meaning<br><br>In the alternative, "aligned widthwise or lengthwise in a plane" | Indefinite.<br>Alternatively, "front face of one bar is stacked against the back face of another bar in a direction perpendicular to the array of LCD devices" |

The phrase "face-to-face" or "arranged face-to-face" is well understood and requires no construction beyond its plain and ordinary meaning. For example, *Webster's New Dictionary* defines "face to face" as "confronting each other" or "very near to: with *with*." Ex. 5, BP_CC_00000117. These definitions are entirely consistent with the use of "face-to-face" in the '598 Patent. Specifically, the '598 Patent explains that: "as shown in FIG. 6 [reproduced on the right], a plurality of solid metal block bars 600 are arranged face-to-face, to be congruent to the planar array 110 of LCD devices." '598 Pat.,

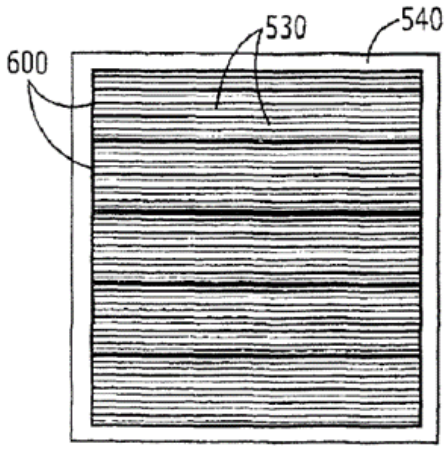

FIG. 6

col. 8:10-14 (emphasis added). Thus, the patent expressly illustrates an arrangement of bars "face-to-face." However, if the Court believes that an express definition would help a jury, Brightplus submits that a definition consistent with the express disclosure in the specification would be "aligned widthwise or lengthwise in a plane."

Despite an express disclosure in the specification, Hisense argues that these terms are indefinite. Hisense appears to base its arguments on the file history of U.S. Patent RE45,796—which issued from a *continuation* application to the '598 Patent. During prosecution of the '796 Patent, the applicant amended the claims to cover, *inter alia*, "a plurality of tiles that are connected end-to-end" with "a plurality of light emitting diodes" mounted on a face of the respective tile. Ex. 13, '796 File History, April 2, 2012 Amendment. The Examiner originally rejected the new claims based on prior art, but several office actions later, the USPTO rejected the new claims because the Examiner thought that "a plurality of tiles that are connected end-to-end is not supported by the Specification" and constituted "new matter." Ex. 14, '796 File History, November 20, 2012 Office Action, p. 2. Applicant disagreed and pointed to Figs. 6 and 7 for support (Ex. 15, '796 File History, January 2, 2013 Amendment, p. 6):

> Upon review, Applicants recognized that they have may created confusion due to the use of the phrase "face-to-face" in the "Summary of the Invention" (Column 3, line 8) and in the description of Figure 6 (Column 8, line 18).

> This phrase is clearly in error, because if the tiles or bars were connected face-to-face, they would not be congruent to the planar array **110** of LCD devices, as described, for example, at Column 8, lines 17-22. Moreover, if oriented face-to-face, some of the LEDs would be covered by another tile or block, or the LEDs would radiate in two opposite directions, contrary to Figures 1-5 and the associated passages of the specification.

Applicant then removed the "face-to-face" language from the '796 Patent. *Id.* These statements from a subsequent application do not mean that "face-to-face" in the '598 Patent is indefinite.

First, there were two predecessor patents to the '796 Patent that used the phrase "face-to-face" and neither the Examiner nor the applicant had any issues with that term. U.S. Patent No. 7,322,732 from which both the '598 and '796 originated disclosed *and* claimed the phrase "face-to-face." So did the '598 Patent. The Examiner raised no written description or indefiniteness rejections for over four years of combined prosecution with respect to "face-to-face." This is not surprising since rectangular prisms, such as the bars or tiles of the '598 Patent include six faces (see dashed red arrows on right):

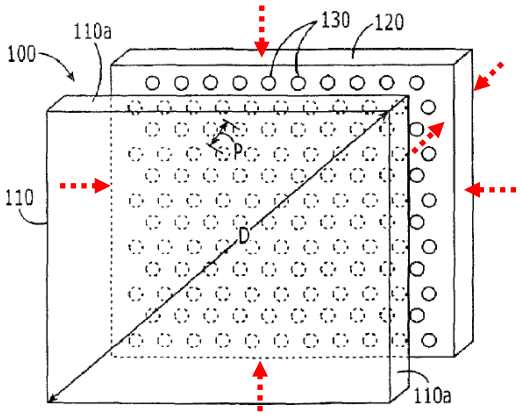

FIG. 2

Second, imputing statements made in a subsequent application, under a threat of a rejection, as resulting in indefiniteness of a prior application (which the

Examiner had no trouble understanding) turns the prosecution history on its head. Courts have rejected arguments similar to the one raised by Hisense before:

> The Court is not aware of any case issuing an indefiniteness ruling in an ancestor patent based on statements made in a *subsequent* application. *See Trading Technologies Int'l, Inc. v. Open E Cry, LLC*, 728 F.3d 1309, 1323 (Fed. Cir. 2013) (noting that prosecution history estoppel and disclaimer "can extend *from* a parent application to subsequent patents") (emphases added).

*Apple, Inc. v. Samsung Elecs. Co*., 2014 U.S. Dist. LEXIS 8157, *123 (N.D. Cal. Jan. 21, 2014). For the same reasons, Hisense's alternative construction of this term, based on a supposed prosecution history disclaimer also fails.

Third, disclosure of "face-to-face" and "end-to-end" in the same figures is not inconsistent. A "face" of a tile or bar can also be an "end" of a tile or bar—but not necessarily or always. In other words, a tile or bar may have an "end" that is a "face" in some circumstances and not a "face" in others. For example, looking at a cross-section of bars illustrated below, the left image shows a bar with an end that is a "face" while the bar on the right has an "end" that is not a "face":

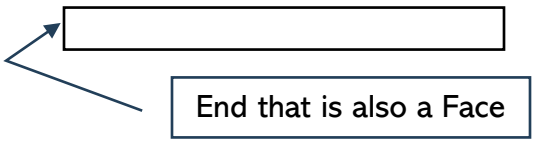


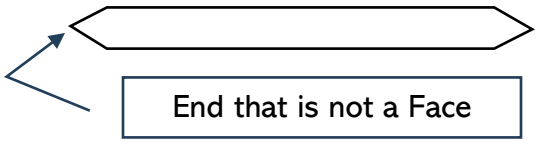


For these reasons, the term is not indefinite.

## I. "congruent to the planar array of LCD devices" — U.S. Pat. No. RE42,598 (claims 46)

| Brightplus's Construction | Hisense's Construction |
|---|---|
| "positioned to cover substantially the same | having the same size and shape as |

| | |
|---|---|
| area as the planar array of LCD devices" | the planar array of LCD devices |

In the '598 patent, the term "congruent to" means "positioned to cover substantially the same area as." While Hisense attempts to construe "congruent" as "having the same size and shape," the evidence refutes its narrow construction.

First, Hisense's construction contradicts the specification, which does not require "the same size and shape" for congruency. The specification explains that "[i]n other embodiments, as shown in Fig. 6, a plurality of solid metal block bars 600 are arranged face-to-face, to be congruent to the planar array 110 of LCD devices. In still other embodiments, as shown in FIG. 7, a plurality of solid metal block tiles 700 are arranged in an array that is congruent to the planar array 110 of LCD devices." '598 Pat., col. 8:10-16.

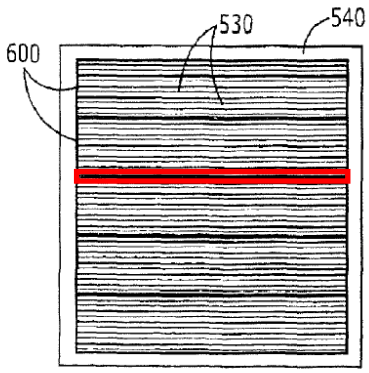


FIG. 6

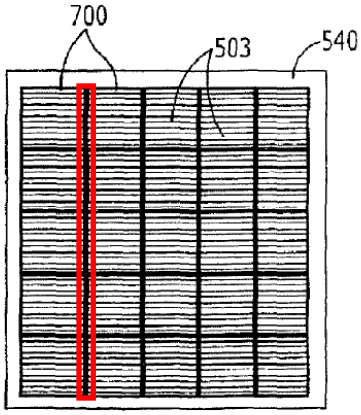


FIG. 7

Yet, those embodiments plainly illustrate the presence of gaps between bars 600 (Fig. 6) and tiles 700 (Fig. 7). The presence of gaps contradicts Hisense's requirement of "the same size and shape" and supports Brightplus's "substantially

the same area" construction.

Further, Hisense's argument that congruent requires "the same . . . shape" runs contrary to certain embodiments in the specification. For example, the solid metal block 500 in Fig. 5 includes various "cavities 510" ('598 Pat., col. 7:57) as well as "heat sink fins 530" (*id.,* col. 7:58). It is apparent that a block with fins cannot be the same shape and size with planar array 110. Moreover, "embodiments of FIG. 9 [which] may be combined with embodiments of FIGS. 5, 6, 7 and/or 8" illustrate "metal block 500" (*id.*, col. 8:60) with an even more complicated structure than Fig. 5, including not only heat sink fins 530, but also "oblique" "reflectors 910" (*id.*, col. 9:7). These features of metal block 500 in Figs. 5 and 9 further contradict Hisense's "<u>same</u> . . . shape" argument.

<u>Second</u>, neither the Examiner nor the applicant understood "congruent" to mean "the same size and shape." During prosecution of application No. 12/696,050, which would mature into the Reissue '596 patent, the Examiner rejected a number of claims as being unpatentable over U.S. Patent Application Publication No. 2004/0264212 by Chung et al. in view of U.S. Patent No. 7,042,527 to Imai. The rejection stated that:

> With respect to claims 52-55, 57, 60, 61, 74-77, 79, 82, and 83, Chung teaches all of the claimed elements, as discussed above, except for explicitly teaching the plurality of tiles that are arranged in an array that is congruent to the planar array of LCD devices.
>
> As for claims 52-55, 57, 60, 61, 74-77, 79, 82, and 83, Imai also drawn to display panels teaches, a plurality of tiles (10) that are arranged in an array (Fig. 8) that is congruent to a planar array of LCD devices (4).

Ex. 16, '598 File History, May 25, 2010, p. 5 (underlines added). Fig. 8 of Imai is reproduced for reference below, with double-sided, solid, arrows in red added to show the relative size of "tiles (10)" and the "planar array of LCD devices (4)":

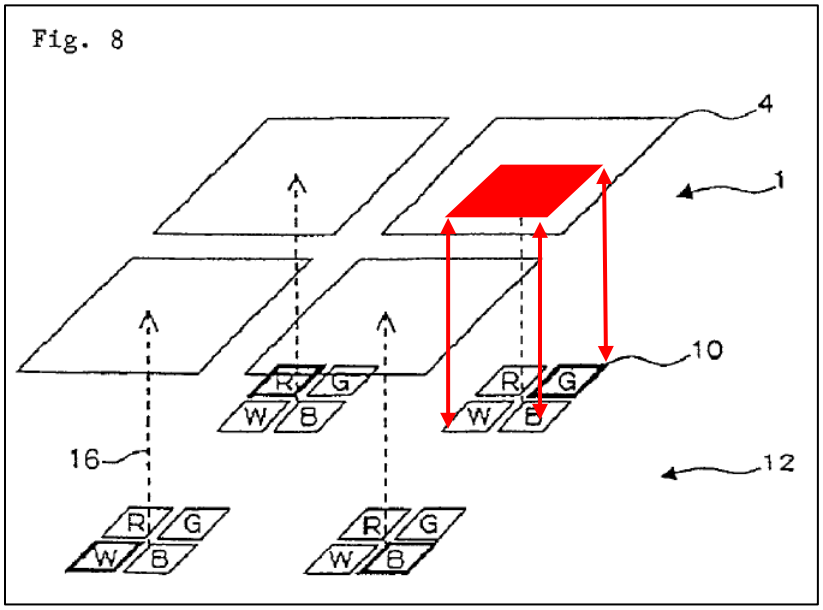


As can be seen from the above illustration, even assuming the Examiner was referring to the entire collection of Imai's tiles (10) as opposed to an individual tile, the Examiner was not suggesting that Imai's tiles have the same size as the planar array of LCD devices. Thus, the Examiner did not consider "congruent" to mean

"the same size and shape" as Hisense argues. Moreover, in response, the applicant also did not argue that "congruent" had to be the same shape and size, and instead cancelled the rejected claims, adding new claims.

For these reasons, Hisense's construction is unduly narrow, and the term "congruent to the planar array of LCD devices" should be construed as "positioned to cover substantially the same area as the planar array of LCD devices."

### J. "the plurality of solid metal block bars being connected end-to-end" — U.S. Pat. No. RE45,796 (claim 46)

| Brightplus's Construction | Hisense's Construction |
|---|---|
| Plain and ordinary meaning<br><br>In the alternative, "the plurality of solid metal block bars being connected such that one end of a solid metal block bar is positioned next to an end of another solid metal block bar" | An end of each of the plurality of bars is physically connected to an end of at least one adjoining bar |

"Connected end-to-end" is a term easily understood by the jury that requires no further construction. If the Court is inclined to construe this term, however, it should adopt Brighplus's proposed alternative construction, which comports to the plain and ordinary meaning. Brighplus's construction stems from the specification that explains the meaning of "connected" as follows:

> It will also be understood that when an element is referred to as being "connected" or "coupled" to another element, it can be directly connected or coupled to the other element or intervening elements may be present. In contrast, when an element is referred to as being "directly connected" or "directly coupled" to another element, there are no intervening elements present.

’796 Pat., col. 4:39-46. Accordingly, the word “connected” in this term does not require a direct connection without any intervening elements. Rather the word “connected” as used in the claims denotes plain and ordinary meaning and allows for connections through intervening elements. And giving meaning to “end-to-end,” Brightplus’s proposed alternative construction includes the concept of “such that one end of a solid metal block bar is positioned next to an end of another solid metal block bar.”

Hisense’s construction, on the other hand, requires “physical connection” between the block bars, which ignores the specification and limits the claim to “directly connected,” which does not allow for intervening elements. But the applicant used the term “connected,” not “directly connected” in the claim so Hisense’s construction is incorrect as it unduly limits the claim scope.

### K. **“including mating surfaces therebetween” — U.S. Pat. No. RE45,796 (claim 46)**

| Brightplus’s Construction | Hisense’s Construction |
|---|---|
| “including surfaces for joining as a pair” | The surfaces at the end of the bars that are in contact |

The dispute between the parties is whether solid metal block bars must touch one another, *i.e.*, be “in contact.” Hisense has already attempted to improperly limit the claims to require the bars to touch one another through the proposed construction of “the plurality of solid metal block bars being connected end-to-end” as discussed in Section IV.J above. This term is Hisense’s second attempt.

The specification discloses that:

> The solid metal block bars 600 . . . may be maintained in place by the frame 540 and/or by various interconnection schemes, including mating surfaces and/or fasteners on the bars . . . that can provide mechanical and/or electrical interconnection of the LED devices 130 on the various bars 600 . . .

'796 Patent col. 8:45-50. This means that "mating surfaces" is a type of an interconnection scheme that can provide electrical interconnection of the LED devices. In other words, the specification expressly states that mating surfaces can provide only electrical interconnections for LEDs and do not need to provide a physical connection for the bars. This is consistent with Brightplus's construction that requires mating surfaces to be surfaces for joining as a pair and is in accord with the plain and ordinary meaning based on a dictionary definition from the contemporaneous dictionary.

> 2Mate – *n* **1**: ASSOCIATE, COMPANION; also: HELPER **2**: a deck officer on a merchant ship ranking below the complaint **3**: one of a pair; *esp*: either member of a married couple or a breeding pair of animals
>
> 3Mate – *vb* **mated; mating 1**: to join or fit together **2**: to come or bring together as mates **3**: COPULATE"

Ex. 6, *The Merriam-Webster Dictionary*, 2004: 442 (BP_CC_00000079).

Hisense's construction, on the other hand, is overly restrictive in that it requires "contact" between the bars. As explained above, this interpretation of "mating surfaces" contradicts the specification and excludes an electrical

interconnection that does not require the bars to be in contact. Moreover, Hisense's proposal would conflict with the proper construction of "connected end-to-end" to not require direct physical contact as explained in Section IV.J above.

To the extent that Hisense argues that the applicant disclaimed non-contact "mating surfaces" in prosecution, Hisense is incorrect. Specifically, in the January 27, 2012 Office Action, the Examiner rejected then pending claims. The Examiner stated that primary reference U.S. Pub. No. 2004/0264212 ("Chung") failed to teach the "mating surfaces" limitation.

> With respect to claims 39-44, Chung teaches all of the claimed elements, as discussed above, except for explicitly teaching the solid block tiles/bars comprises a plurality of solid metal block tiles/bars; the plurality of solid bock tiles/bars are connected to one another via mating surfaces thereof; wherein the solid block tiles/bars are connected to one another via fastening devices.

Ex. 17, '796 File History, January 27, 2012 Office Action, p. 12. The Examiner then introduced secondary reference U.S. Patent No. 6,652,123 ("Wu"):

> As for claims 39 and 40, Wu also drawn to lighting devices, teaches solid block tiles/bars comprises a plurality of solid metal block tiles/bars (column 1, lines 65-66).
>
> As for claims 41 and 42, Wu teaches the plurality of solid bock tiles/bars are connected to one another via mating surfaces thereof (Fig. 3).

*Id*. The Examiner alleged that the "block metal tiles/bars" of the claims corresponded to Wu's "metallic partitions 21," and stated that they "are connected

to one another via mating surfaces thereof (Fig. 3)." Wu's Fig. 3, shows that there is no "contact" between metallic partitions 21." It is apparent that the Examiner viewed non-touching metallic portions 21 as having "mating surfaces" and rails 22 engaging these surfaces to mate metallic portions 21.

Fig. 3.

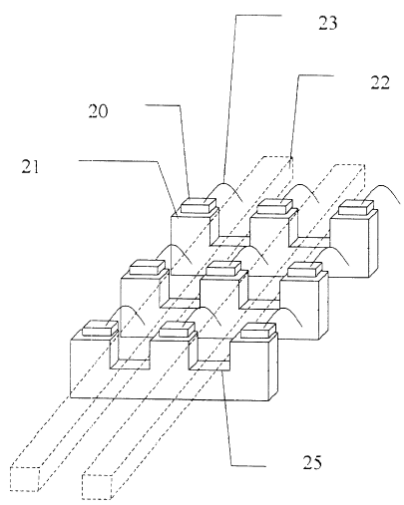


Applicant confirmed this understanding by explaining that primary reference Chung did not disclose or suggest LED arrays 130 having mating surfaces because they were arranged between laps 120.

> Specifically, as was noted above, independent Claims 45 and 53 recite "the plurality of tiles including mating surfaces there between" and "the plurality of bars including mating surfaces therebetween". In sharp contrast, as clearly illustrated in Figure 11A of Chung et al., reproduced below for the convenience of the Examiner, the LED arrays 130 are spaced apart from one another and are, in fact, between the lamps 120.

Ex. 18, '796 File History, April 2, 2012 Response, p. 8.

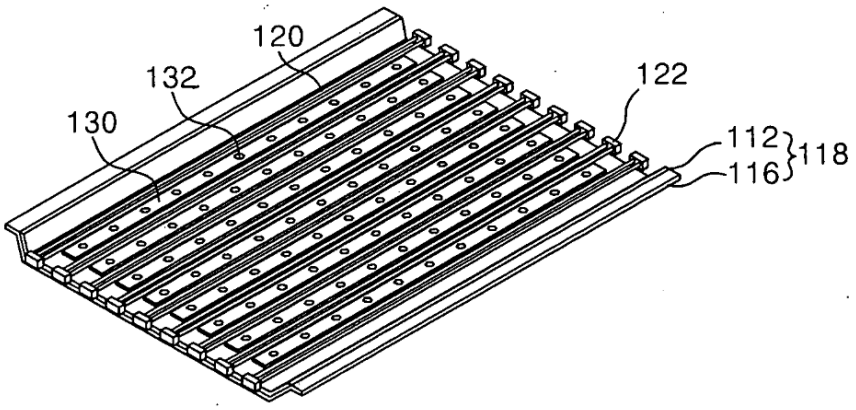

*Id*., p.9 (Chung, Fig. 11A). Hisense is likely to argue that the above statement by Applicant results in prosecution disclaimer. But a careful reading of Chung and the above statement shows that no clear and unmistakable disavowal has occurred.

Specifically, the import of the applicant's statement is that Chung's arrays 130 (that the Examiner found to correspond to the solid metal block bars of claim 46) "are spaced apart from one another <u>and are, in fact, between the lamps 120</u>." (Emphasis added). Had the Applicant meant that merely separating arrays 130 in Chung was what made the relevant surfaces not "mating surfaces," it would be unnecessary for it to mention, let alone stress, the presence of lamps 120 between them. The fact that in Chung lamps 120 are situated between arrays 130 was a necessary distinguishing feature. This is because lamps 120, situated between arrays 130 and along their entire lengths, are what renders end surfaces of arrays 130 not to be "mating." The natural consequence of the applicant's emphasizing lamps 120 in Chung is that even if two surfaces were designed to be joined as a pair (such as straight edges, or complimentary curved edges), they would still not be "mating surfaces" if separated by a barrier, such as lamps 120.

At the very least, the above reading of the applicant's statement is one of way of interpreting the passage from the file history. And therefore, it cannot amount to clear and unmistakable disclaimer of claim scope. *Tech. Props. Ltd.*, 849 F.3d at 1358.

Dated: July 10, 2023

Respectfully submitted,

By: */s/ Daniel A. Kent*

Daniel A. Kent
dankent@kentrisley.com
Tel: (404) 585-4214
Fax: (404) 829-2412
KENT & RISLEY LLC
5755 N Point Pkwy Ste 57
Alpharetta, GA 30022

Dmitry Kheyfits
dkheyfits@kblit.com
Brandon G. Moore
bmoore@kblit.com
KHEYFITS BELENKY LLP
12600 Hill Country Blvd., Suite R-275
Austin, Texas 78738
Tel: 737-228-1838
Fax: 737-228-1843

Andrey Belenky
abelenky@kblit.com
Hanna G. Cohen
hgcohen@kblit.com
KHEYFITS BELENKY LLP
80 Broad Street, 5th Floor
New York, NY 10004
Tel: 212-203-5399
Fax: 212-203-6445

*Attorneys for Plaintiff*
*Brightplus Ventures LLC*

## CERTIFICATE OF SERVICE

I hereby certify that on July 10, 2023, I electronically filed the foregoing document with the Clerk of Court using the CM/ECF system, which will automatically send email notification of such filing to all attorneys of record.

/s/ Daniel A. Kent

Daniel A. Kent